UCHIDA

AeroCut Velocity

OPERATION MANUAL

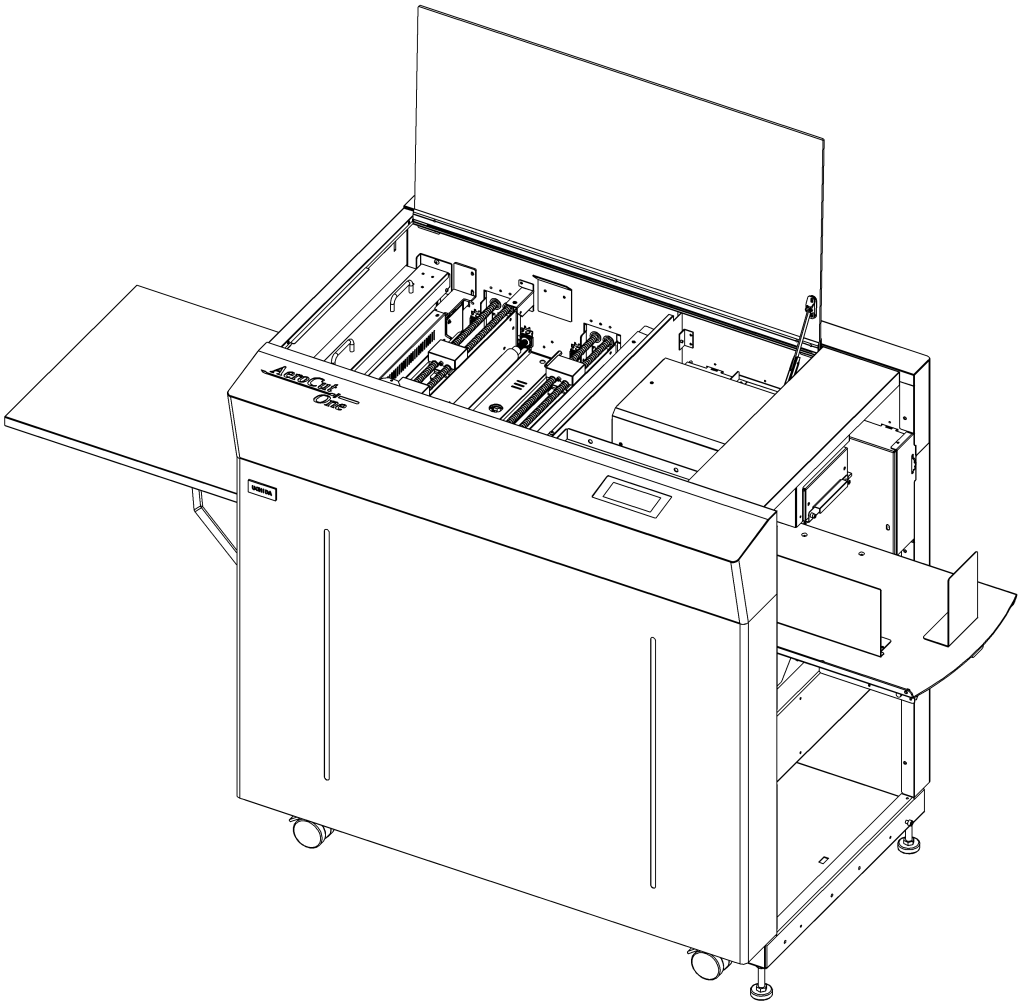

UCHIDA YOKO CO., LTD., TOKYO, JAPAN

xx-xxx V1.00

- Use machine only after reading the "Safety Instructions" given below carefully.
- These safety instructions are given to ensure that the machine will be used safely and properly and to prevent operators from sustaining harm and injuries.

Explanation of markings

Marking	Meaning of marking
⚠ Warning	This symbol stands for immediate danger threatening the life and health of persons. Disregarding these instructions may cause severe damage to health and even serious injuries.
⚠ Caution	This symbol stands for an endangering situation that may occur. Disregarding these instructions may lead to slight injuries or damage to property.

Definition of Symbols and Notes

In this manual the following names and signs stand for possible dangers.



Caution

This symbol stands for an endangering situation that may occur. Disregarding these instructions may lead to slight injuries or damages to property.



Note

This symbol stands for notes, operational hints, and other useful information.They are convenient for exploiting the machine’s functional abilities.

SAFETY INSTRUCTIONS

Explanations of the illustrations used in the Safety Instructions are given as follows:



Warning

1. Don't open the cover of the equipment. There is a danger of receiving an injury or electric shock.
2. Don't touch any rotating part. There is a danger of receiving an injury.
3. Don’t put hands inside work area. May result in severe injury.



Caution

1. Don't put a hand into the cover or a clearance between parts. There is a danger of receiving an injury.
2. Don't bring a hand, face, hair, sleeves of clothes and the like close to the rotating parts of the machine. There is a danger of receiving an injury.
3. Don't touch the blade point of the cutter. There is a danger of receiving an injury.
4. Turn off the power supply beforehand when setting the feed table. There is a danger of receiving an injury.
5. Turn off the power supply beforehand when removing paper scraps. There is a danger of receiving an injury.
6. Do not exceed the MAX level when stacking the paper. Exceeding it may cause a mechanical failure.
7. Turn off the power supply beforehand when starting maintenance or inspection. There is a danger of receiving an injury.
8. When you install a machine, please install to a place with no dust, and the place which is not influenced with a liquid. It becomes the cause of failure if the installation method is mistaken.
9. When you put a machine into operation, please change into the state where all covers were closed. If it works where a cover is opened, there is fear of an injury.

Before use

Read this "Operation Manual" carefully before use. In particular, be sure to read "Safety Instructions" (page 2 to page 3) to ensure that the machine will be used properly.

Keep the manual at an appointed place with care so that it may be accessible whenever necessary.

The specifications of this product are subject to change for improvement. Therefore, don't mistake the "Operation Manual" of one product of the same model for that of another because descriptions in the "Operation Manual" of products of the same model may differ.

Contents

1 Introduction....6
1.1 Names of parts....6
1.2 Accessories....8
1.3 Touch panel....8
1.4 Paper weight / quality....9
2 Operating instructions....10
2.1 Lock a caster brake....10
2.2 Turning the power on....10
2.3 Initial position....11
2.4 Input....11
2.5 Set....12
2.6 Paper setting....12
2.7 Stacker and Waste box settings....13
2.8 Start....15
2.9 Stop....15
2.10 Waste disposal....17
2.11 Power off....17
3 Cut pattern input....18
3.1 Outline....18
3.2 PRESET....18
3.3 MANUSET....20
3.4 FLEX MODE....23
3.5 SAVE / READ....25
4 How to use options....27
4.1 How to attach the Y-perforator....27
4.2 How to adjust the Y-perforation location....28
4.3 How to adjust the depth of Y-perforation....29
5 Adjustment....30
5.1 Adjustments on the paper feed section....30
5.2 Speed change....32
5.3 Skew adjustment....33
5.4 Creaser adjustment....33
5.5 Fine adjustments on processing positions....34
5.5.1 In cases cutting positions don’t match to image positions.....34
5.5.2 If the cut measurement does not match the input value....35
6 Manual control....37
6.1 Manual control screen....37

6.2 Paper jam 37
7 Error messages 38
8 Troubleshooting 43
9 Product specifications 45

1 Introduction

1.1 Names of parts

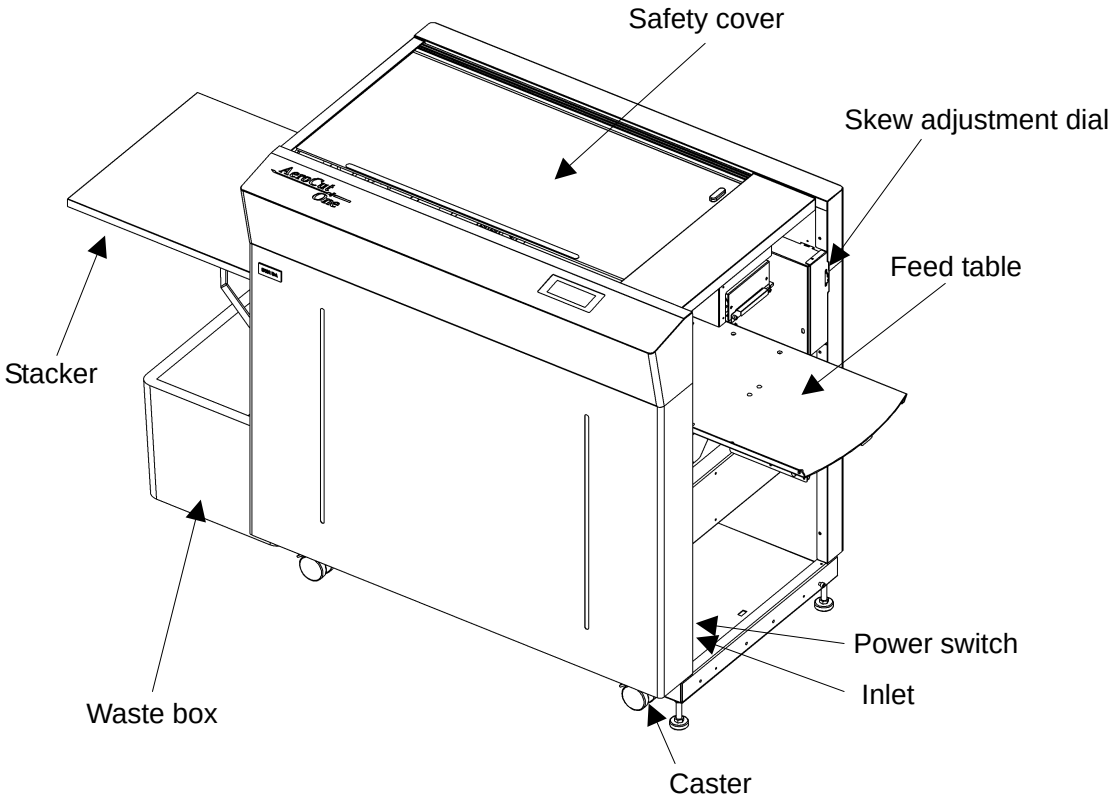

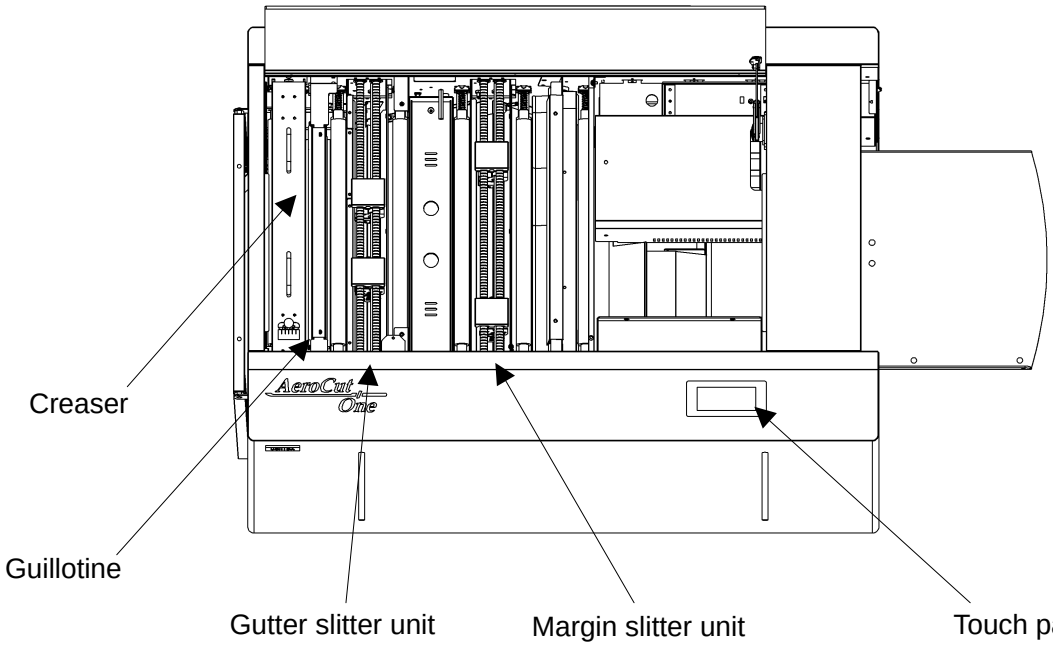

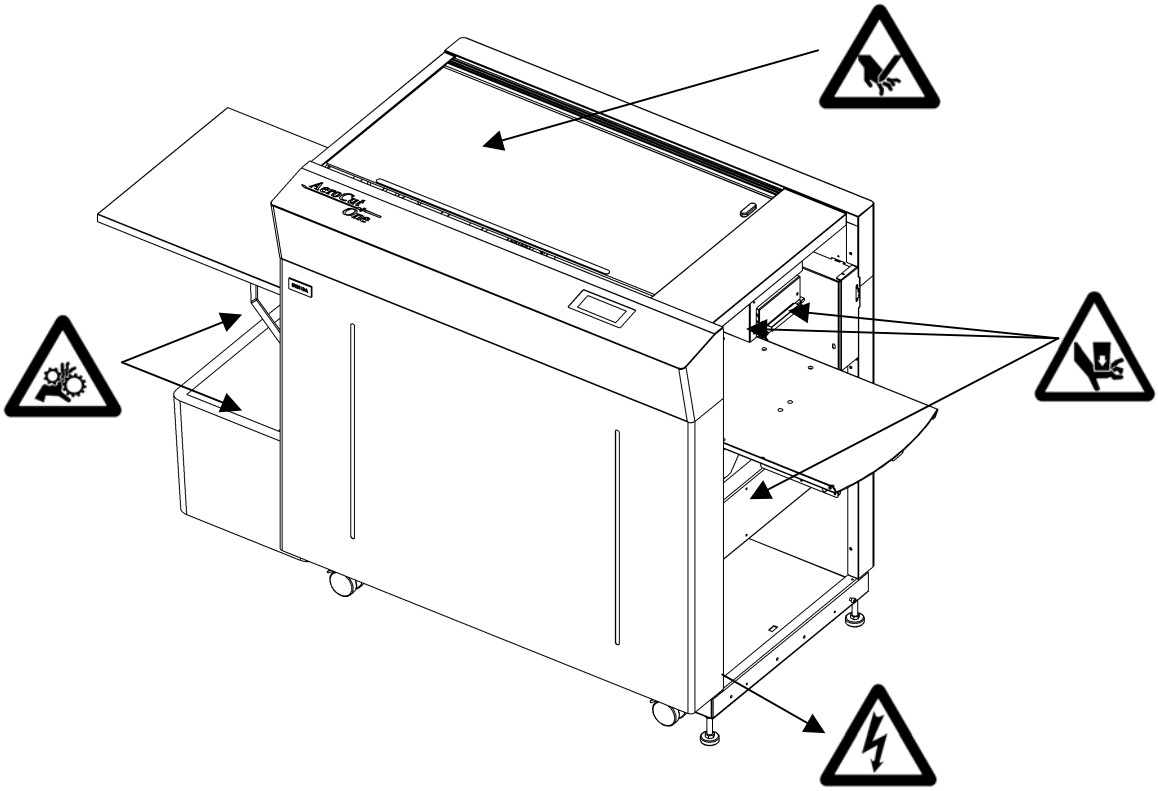

Warning	
	Don’t put hands inside work area. May result in severe injury.
	Don't touch any rotating part. There is a danger of receiving an injury.
	Don't open the cover of the equipment. There is a danger of receiving an injury or electric shock.

Caution	
	Don't touch the blade point of the cutter. There is a danger of receiving an injury.

1.2 Accessories

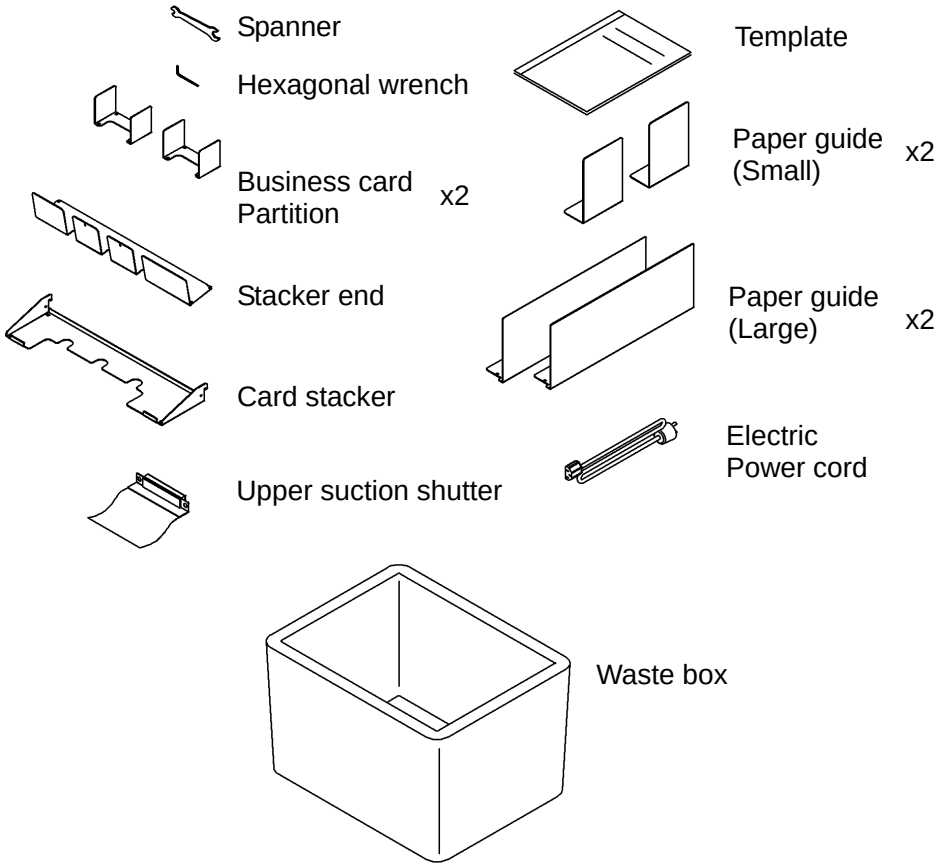

1.3 Touch panel

Home screen

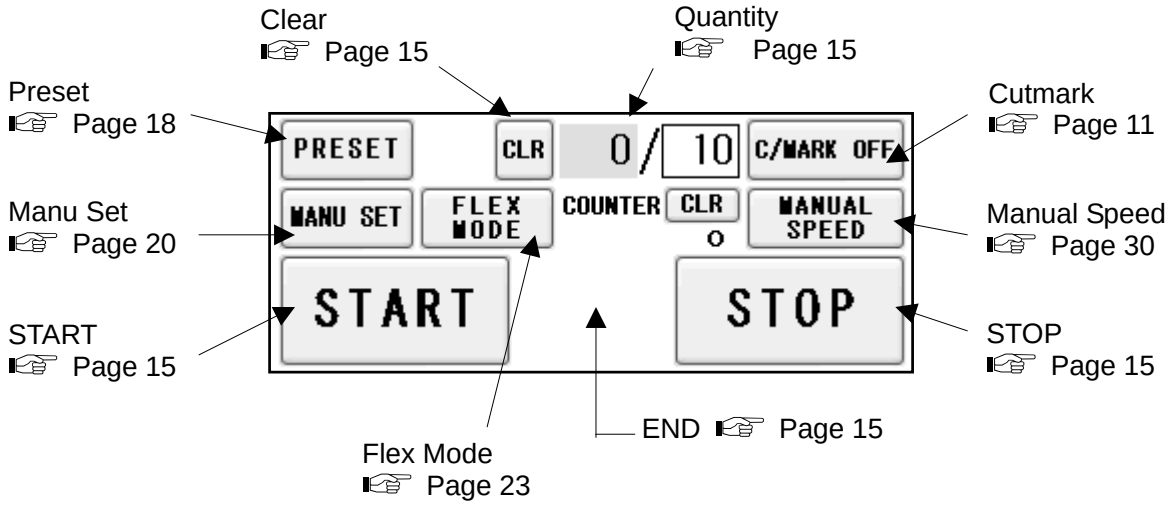

Manu Set screen

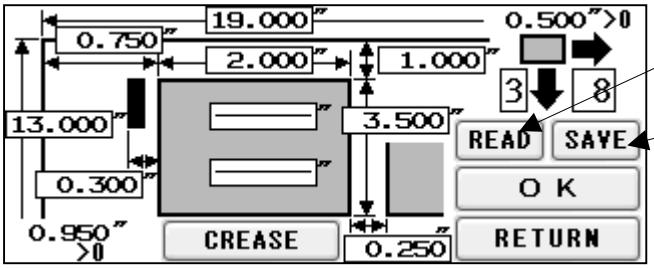

READ
☞ Page 25

SAVE
☞ Page 25

Flex Mode screen

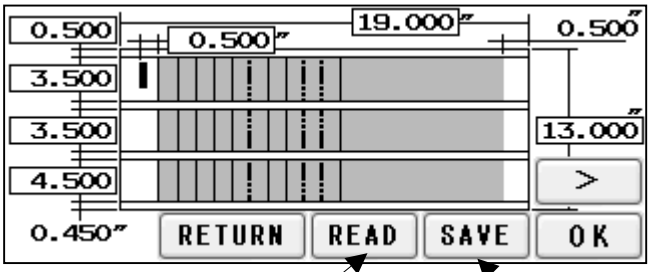

READ
☞ Page 25

SAVE
☞ Page 25

Manual speed screen

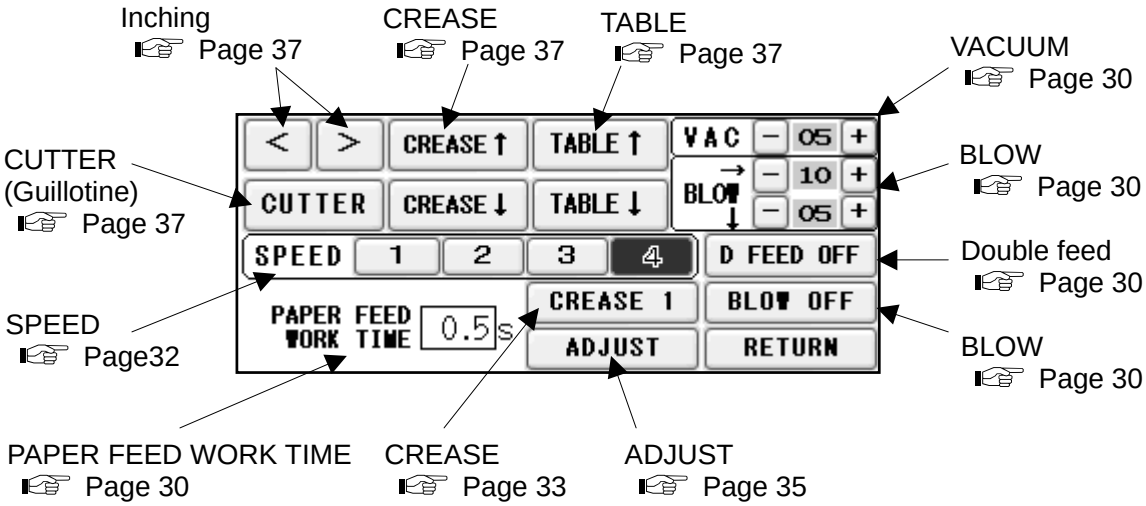

1.4 Paper weight / quality

Use suitable paper stocks which weight is 120 to 400gsm(0.005”-0.016”).

These paper stocks are not suitable in use.

- Papers that has heavily electric static charged. It may cause miss-feed, double feed or paper jam.
- Papers that are more than 0.125” curled or waved. It may cause miss-feed, double feed or paper jam.
- Papers that have ink or toner not fused properly. It may cause contaminating the work and the machine.
- Papers that are too slippery. It may cause miss-feed or inaccurate results.
- Prints that are shrank, stretched or skewed inconsistently. It may cause inaccurate results.

2 Operating instructions

2.1 Lock a caster brake

2.2 Turning the power on

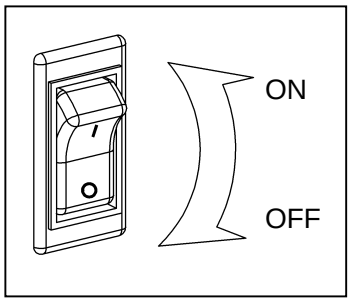

Power switch

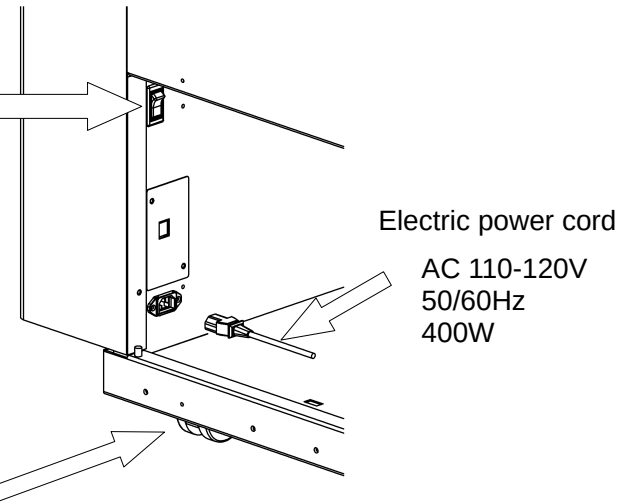

Electric power cord

AC 110-120V
50/60Hz
400W

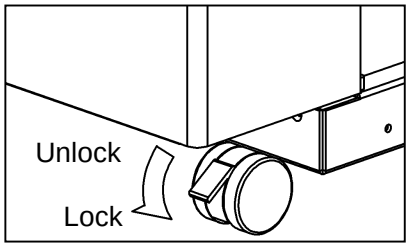

Caster

Power on

Opening screen



Home screen

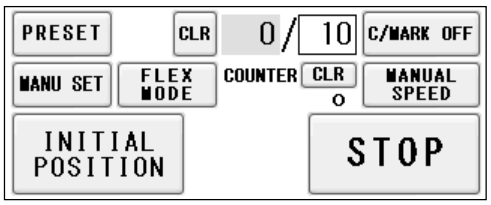

2.3 Initial position

① When the power turned on, the touch screen shows INITIAL POSITION button. Press INITIAL POSITION button.

② The slitters will move to their initial position automatically. Then the button changes to SET.

Home screen

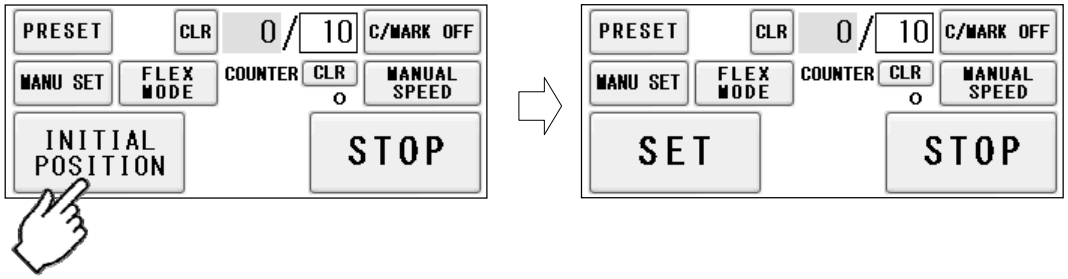

2.4 Input

① Enter the cut pattern.

Home screen

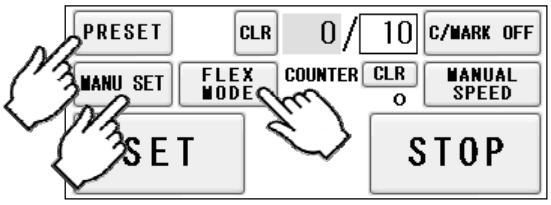

② Enter the number of sheets for operation.

All the sheets on the feed table will feed in case 0 is entered in Qty.

Home screen

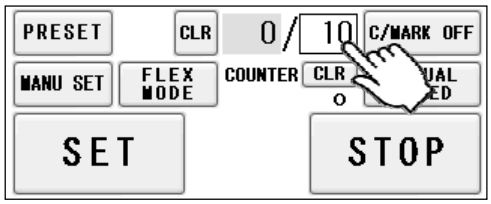

③ Touch the screen to have C/MARK ON to activate cut-mark registration.

When it is on, the machine register the cut-mark and cross cuts at proper positions even the image is drifted.

Home screen

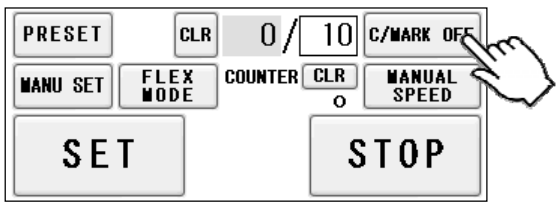

2.5 Set

① With a press of SET button, the slitters will move to the positions according to the selected cut pattern.

② At the same time, Feed table will move to the lower end position.

③ START button will be indicated upon all slitters are completely set.

Home screen

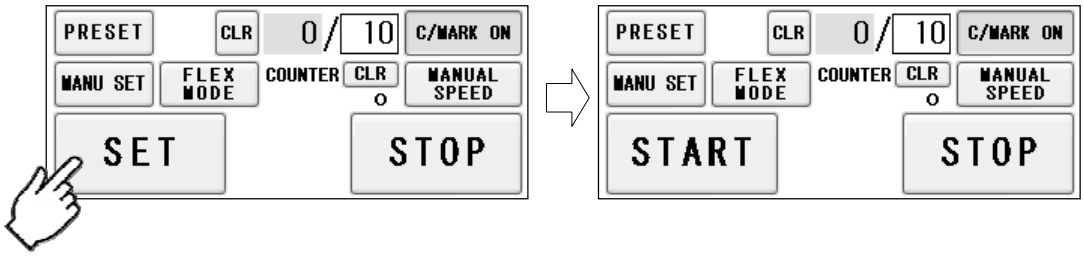

2.6 Paper setting

① Press the START button on the home screen. If the feed table is in upper position. The feed table moves down. Press STOP button to stop the table moving.



② Flip through the sheets well before you put them on the feed table.

③ Set the sheets on the feed table. Use the paper guide (Large) and paper guides (Small) to fix the sheets.

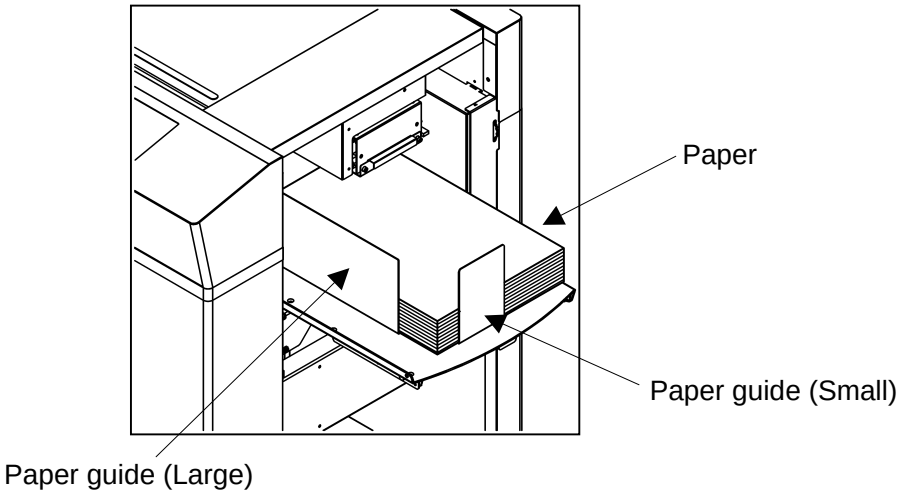

Note.

- Paper loading capacity is 3.95”.
- Make sure that the paper stack does not exceed the MAX label.
- It affects finishing accuracy if there is a gap between the side guide and the sheets.

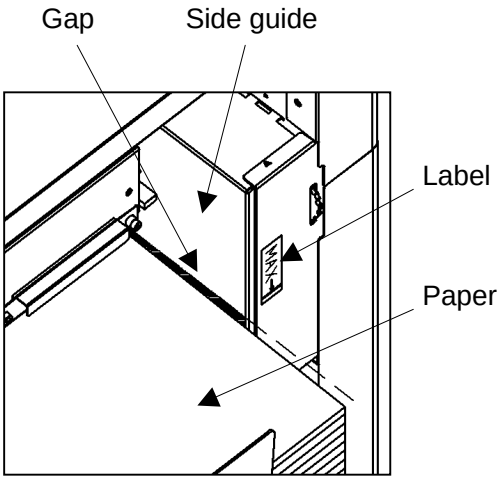

- If the print is skew on the sheets, the angle of the side guide can be adjusted.

☞ Page 33

Warning	
	Don’t put hands inside work area. May result in severe injury.

2.7 Stacker and Waste box settings

① Place the Waste box under the Chute.

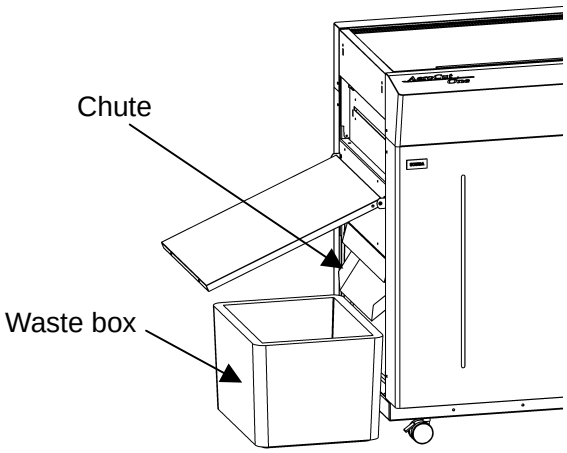

② Open the stacker and set the stays in the indentation of the back of the stacker at an appropriate angle to allow smooth paper ejection.

③ Adjust the large paper guide according to the paper size.

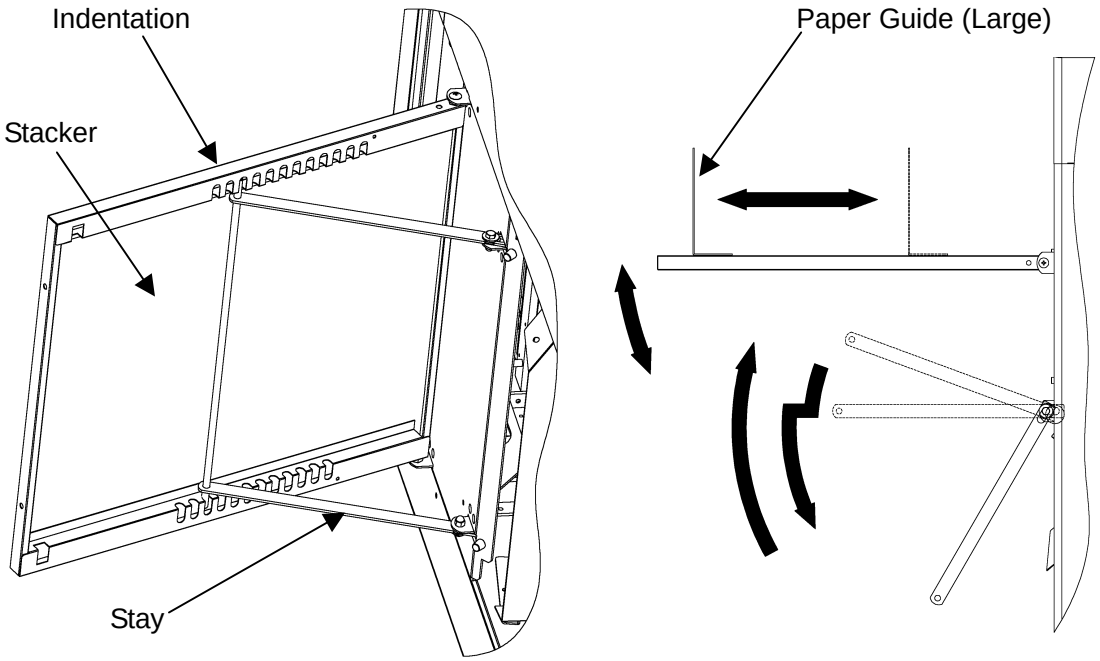

④ Hang the business card stacker to the Stacker panel.

⑤ Find the V- notch to see where to put the business card partition.

⑥ When it is not used, it may be hooked to the upper holes in the stacker panel.

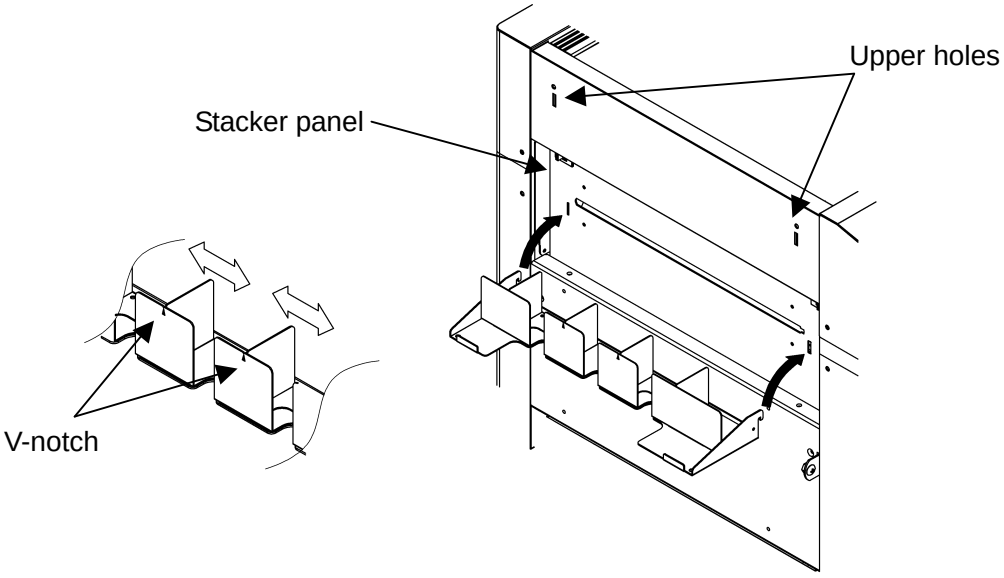

⑦ Change the settings of the stacker according to the cut pattern.

Business card

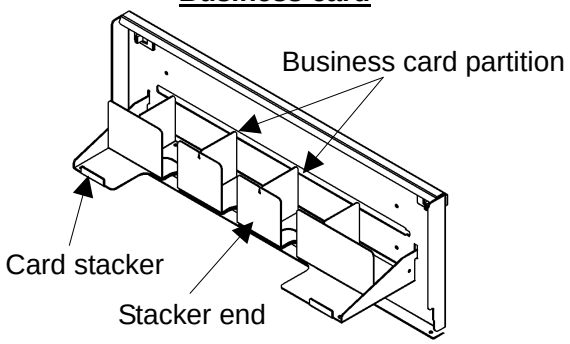

Post card

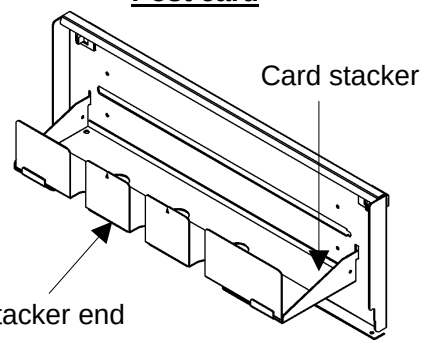

2.8 Start

Home screen

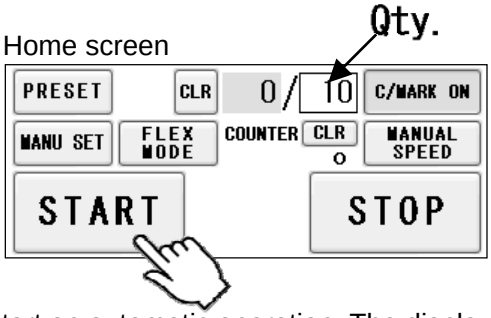

- Press START to start an automatic operation. The display will change to RUNNING.
- After processing the entered number of sheets in Qty. , the machine stops automatically.
- Do not open the Safety cover (☞Page 6) while the machine is running. Machine will stop immediately.

2.9 Stop

Home screen (While Running)

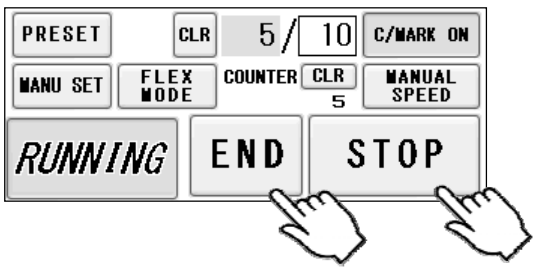

- Press STOP and the machine will make an EMERGENCY stop even if the operation is underway.
- Press END if you wish to stop the machine when the current sheet is completed.

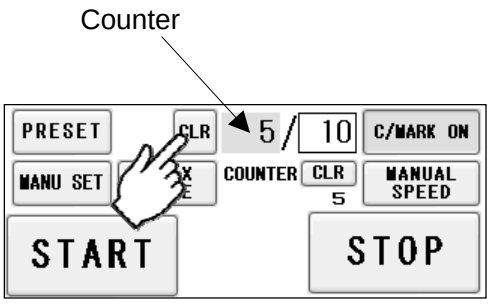

・The counter indicates the number of finished sheet when the machine is stopped with STOP or END button. Press CLR to reset the counter to 0.

・If paper is left in the machine, remove it by inching. (☞ Page 37)

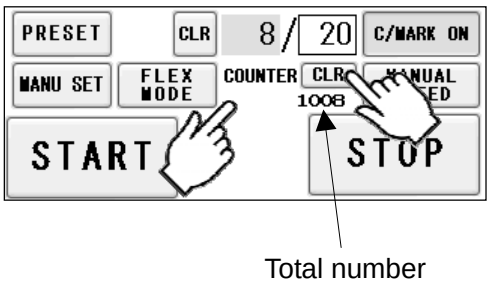

- The total number of processed sheets are counted. Press CLR and hold to clear the number. You can change the Total number.
- You can make a little adjustment on Total number.

2.10 Waste disposal

- Dispose the wastes in the waste box appropriately.
- Overloading wastes causes errors or a breakdown.

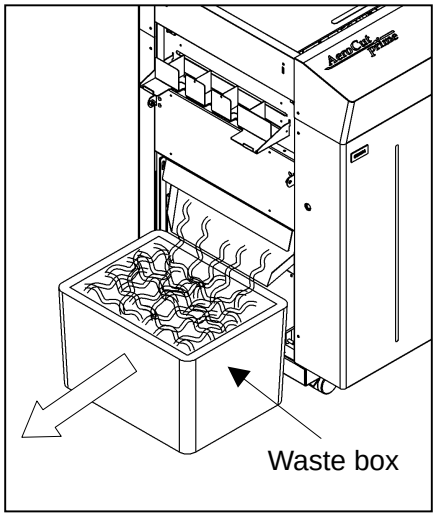

2.11 Power off

- Make sure that the machine is stopped.
- Return to the Home screen.
- Turn off the Power switch.

Home screen

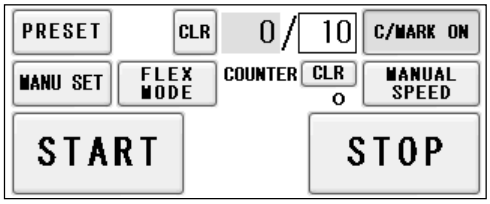

3 Cut pattern input

3.1 Outline

Home screen

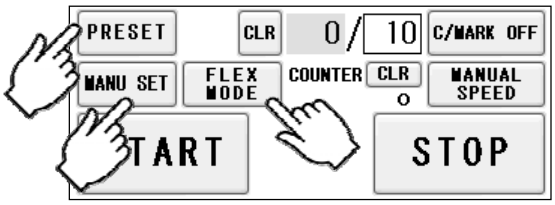

① PRESET

PRESET is a series of cut patterns that are already stored in the machine.

(☞ Template)

② MANU SET

In MANUSET mode, user programs can be created and stored into the machine.

③ FLEX MODE

In FLEX MODE, you can generate user data with a lot of flexibility in layout. And also these data can be stored into the machine.

3.2 PRESET

① Press PRESET.

Home screen

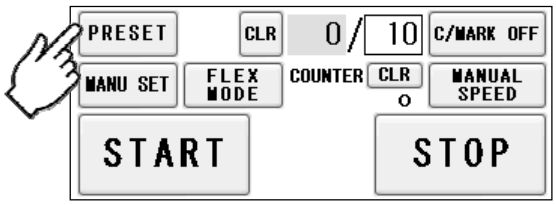

② Press the size of the original sheets.

Paper Selection Screen

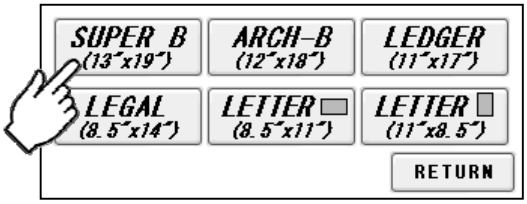

③ Select the cutting pattern.

Cutting Pattern Selection Screen

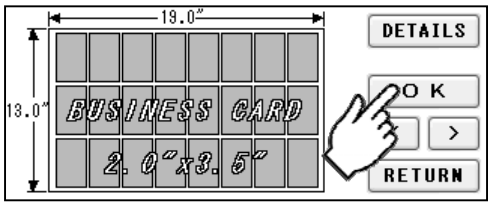

Cutting Pattern Confirmation Screen

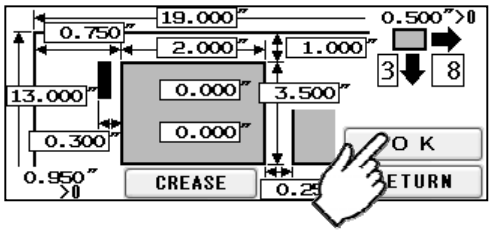

DETAILS	Cut pattern can be checked in detail and the measurements can be changed. Refer to MANUSET (☞Page.20) for measurement setting procedures.
O K	Confirm the cut pattern.
< >	Cutting pattern switching.
RETURN	Return to the previous page.

④ The machine recalls the preset pattern and automatically returns to the home screen.

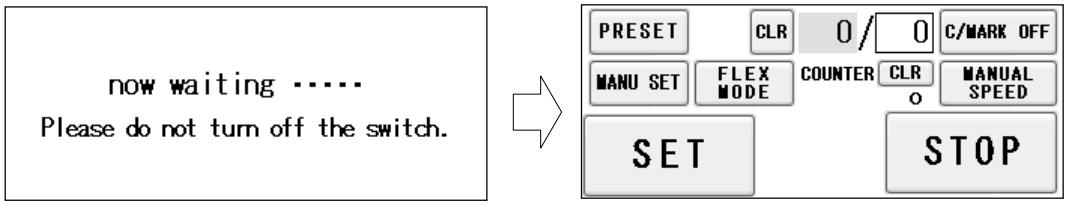

3.3 MANUSET

① Press MANUSET.

Home screen

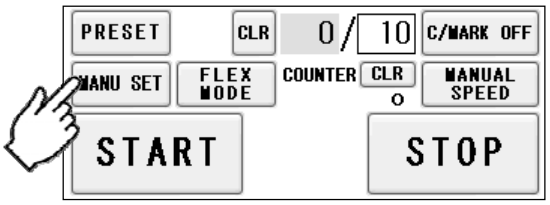

② The screen displays the current cut pattern.

Cutting Pattern Input Screen

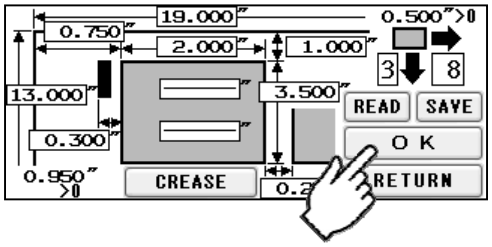

Crease Pos. Input Screen

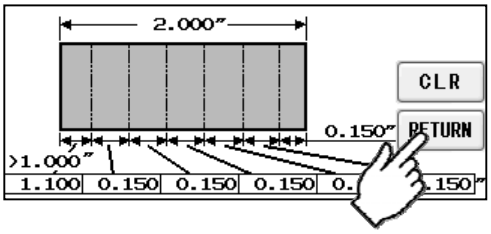

Cutting Pattern Input Screen	
READ	Move to User Program Selection Screen.
SAVE	Save Cut pattern as inputted into User Program memory.
O K	Confirm Cut pattern as inputted.
CREASE	Move to Crease Pos. Input Screen. CREASE ON will be indicated in case crease processing is given.
RETURN	Go back to Home screen without any changes.

Crease Pos. Input Screen	
CLR	All values inputted on Crease pos. input screen will be cleared.
RETURN	Confirm values as inputted and go back to Cutting Pattern Input Screen.

③ Press the number to change the value.

Measurement A-R can be customized. Measurement S-U will be calculated automatically.

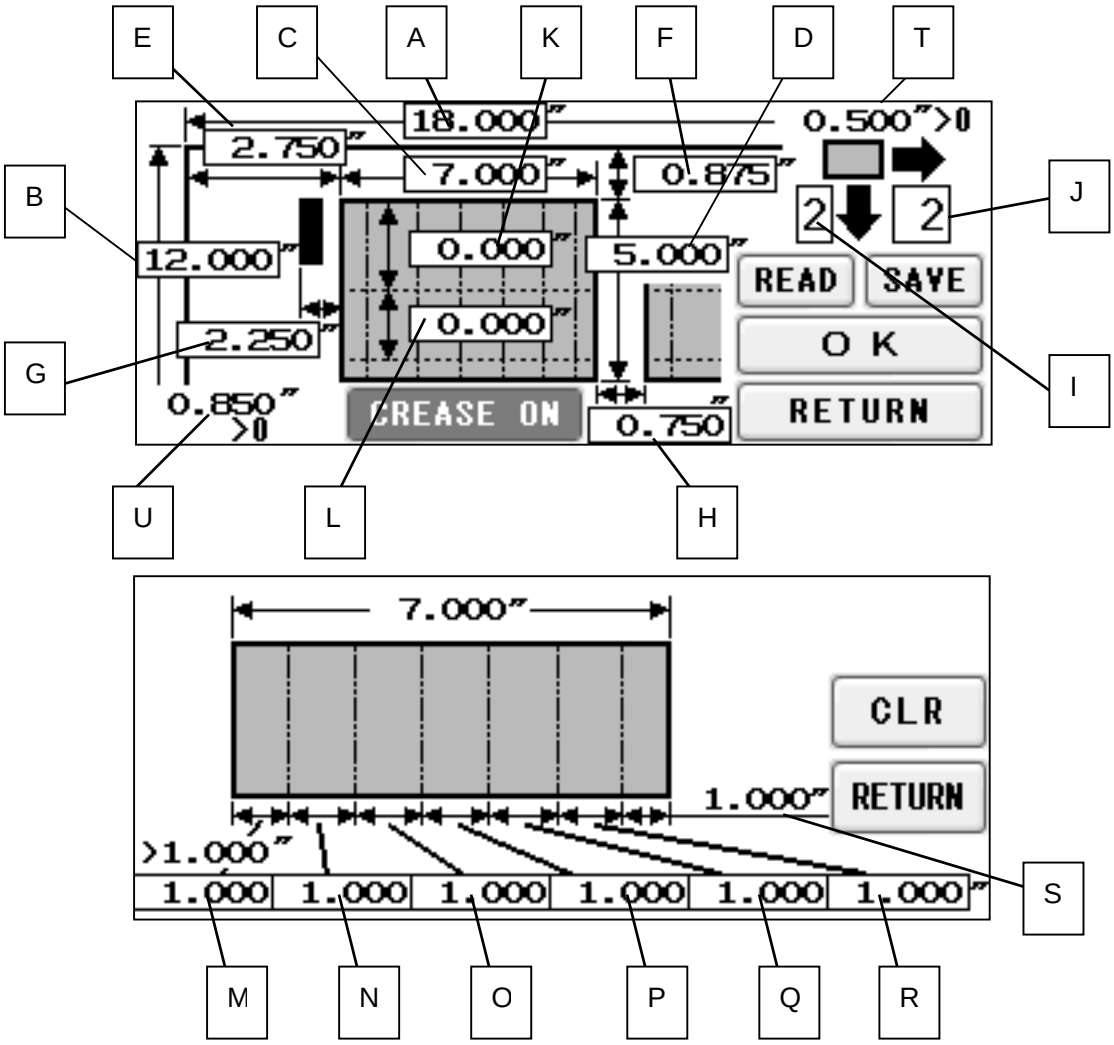

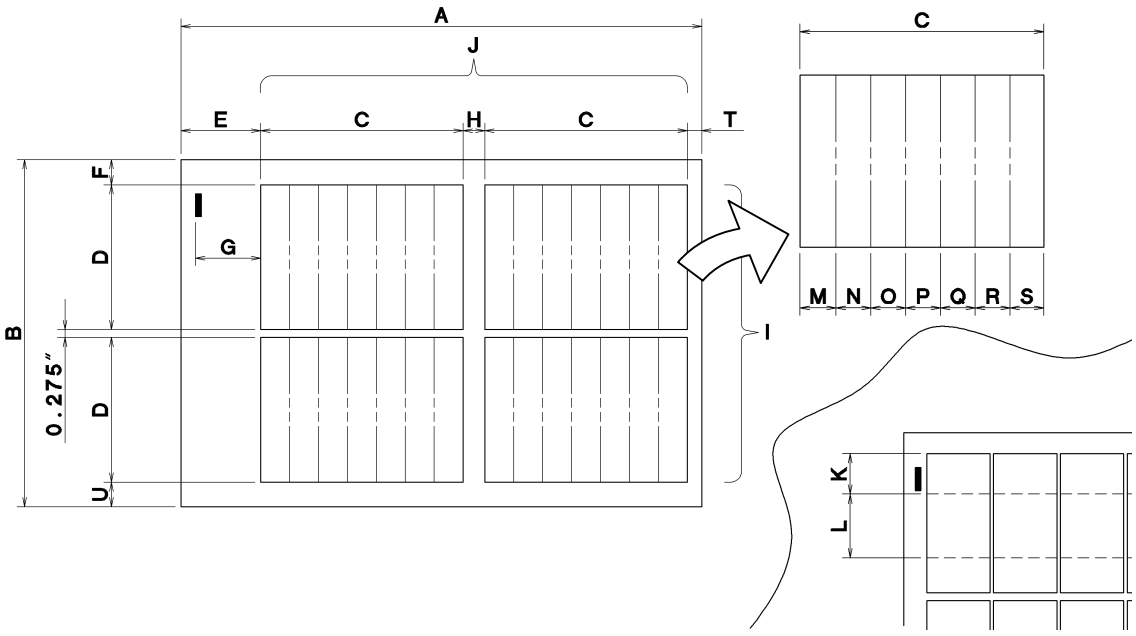

④ There are some limitations in value as shown on below image.

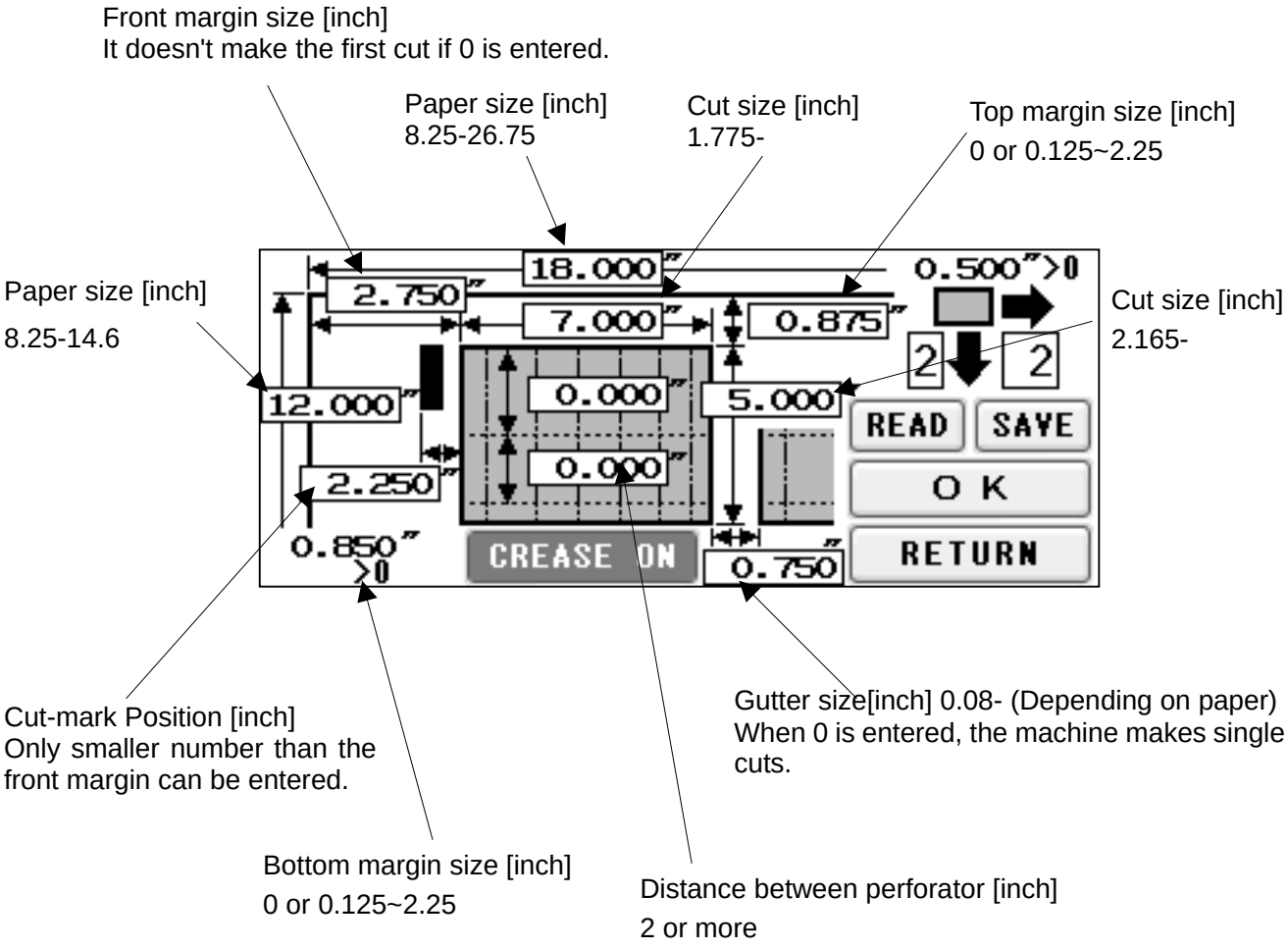

・If an error message is displayed. ☞ Page 38

3.4 FLEX MODE

① Press FLEX MODE.

Home screen

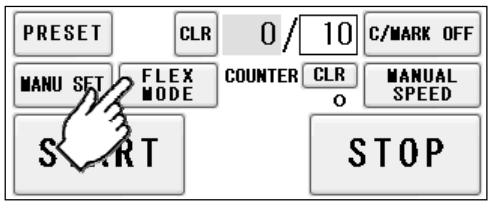

② FLEX mode is an operation mode where you can input up to 20 actions (cross cut, crease or perforate) per page. This allows the machine to finish jobs which MANU SET cannot finish, such as multiple sizes of cards from a page and pass through pages without any actions.

③ This picture on right is an example which will explain how to input values.

——— : Cut

—··— : Crease

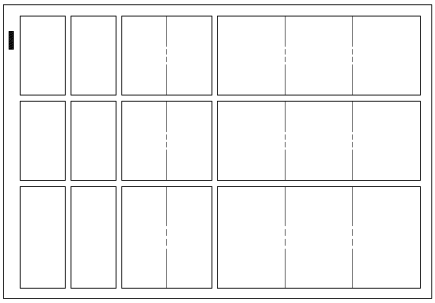

④ Press the number to change the value.

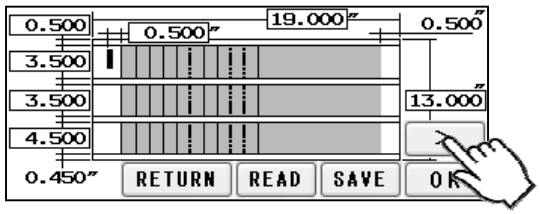

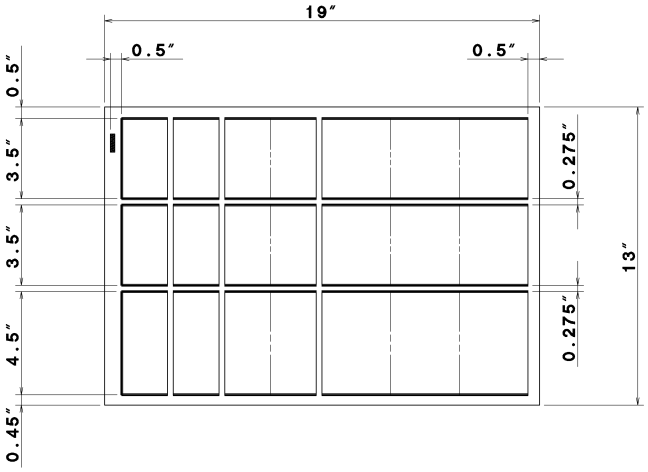

⑤ When data input is completed, press › to the next screen.

⑥ This screen allows you to input each pitch from No. 1 to No. 20. The adjacent switches are used for selecting no operation, guillotine, or creaser. Every time the switch is pressed, the selected operation changes.

[ ] : No operation　　[CRS] : Creaser

[CUT] : Guillotine

⑦ If the pitch of 0.000 is input, all the pitches after that one are corrected to 0.000 (no operation).

⑧ Pressing [SAME PITCH] copies the No. 1 pitch and its relevant operation to No. 2 to No. 20 pitches.

⑨ When data input is completed, press [>] to the next screen.

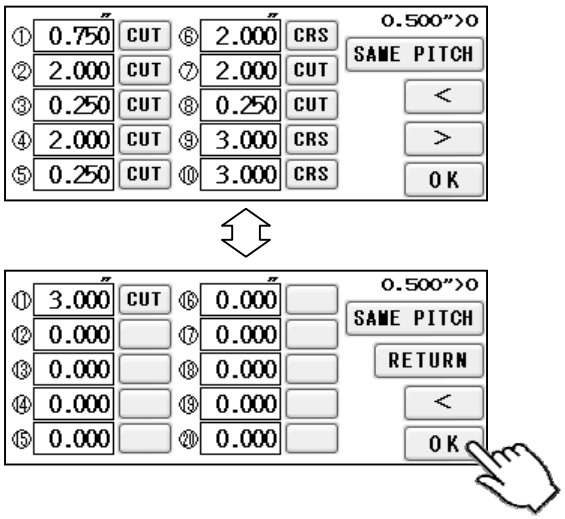

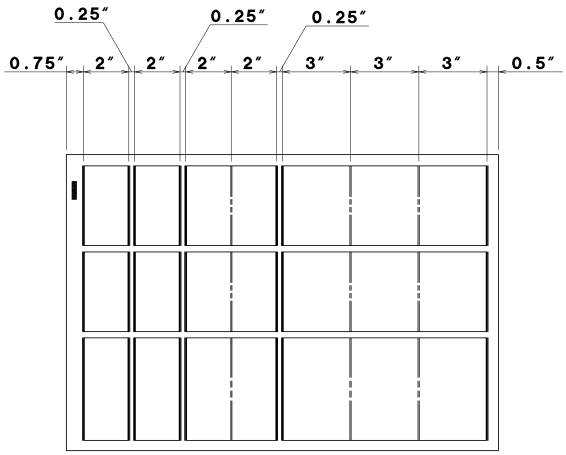

⑩ When data input is completed, Press [OK] to Home Screen.

3.5 SAVE / READ

- 100 of MANUSET user data can be stored.
- 60 of FLEX MODE user data can be stored.
- SAVE/READ procedures are same in each mode.

SAVE

① Can store the contents of the MANUSET Press the SAVE.

Cutting Pattern Input Screen

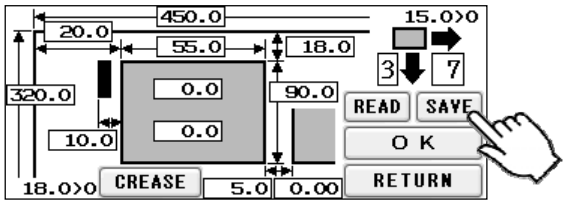

② Press the button in which you wish to make a registration.

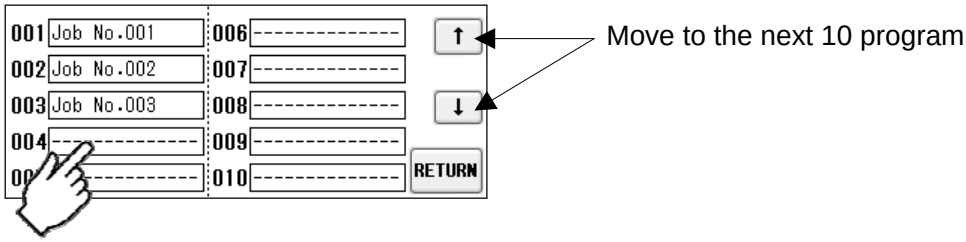

③ Enter the name for registration.

Currently registered name
Double Click to make a copy of input name.

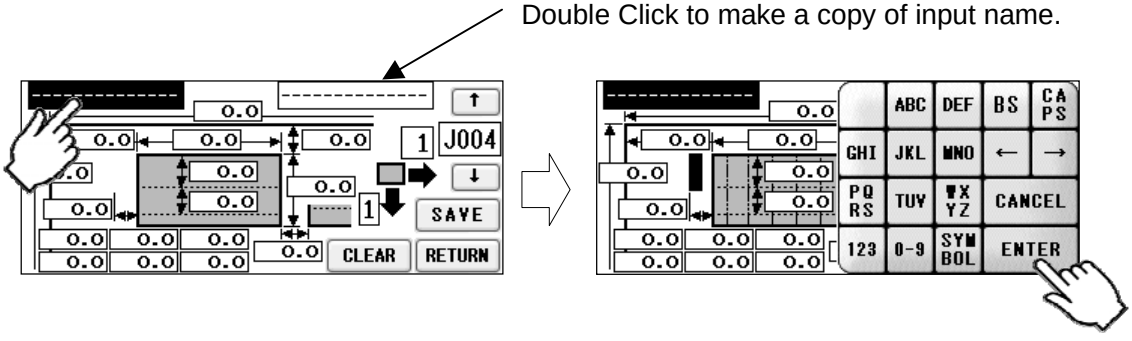

④ This message will be shown if SAVE was pressed. Then press OVERWRITE and save data.

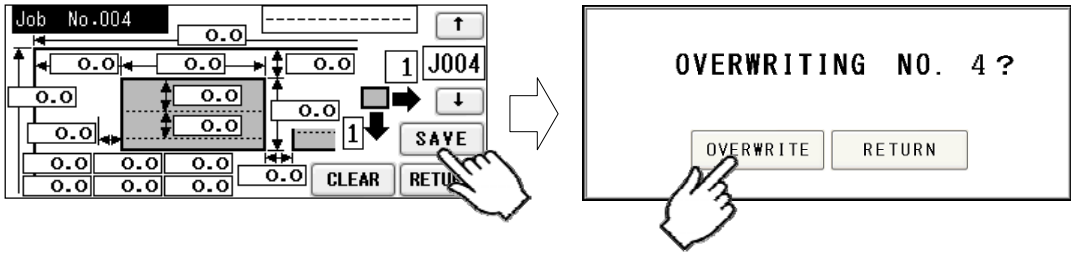

⑤ Saved user data can be deleted with a press of CLEAR.

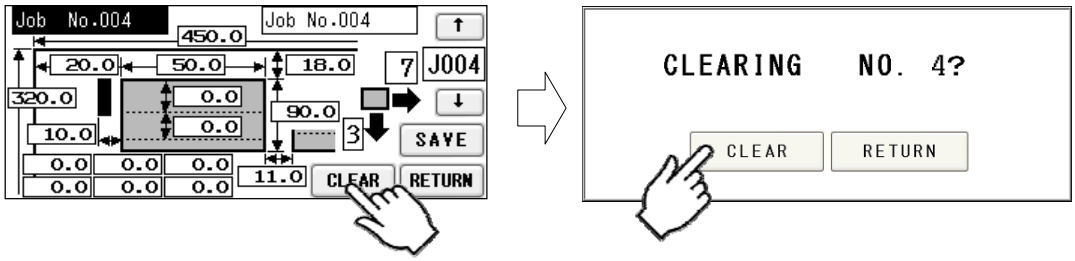

READ

① Can store the contents of the MANUSET Press the READ.

Cutting Pattern Input Screen

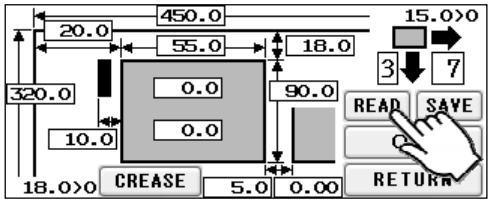

② Press the button of the name you wish to retrieve.

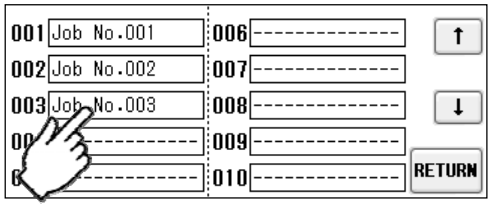

③ Confirm the details of the program for retrieval.
Data can be accessed with a press OK.

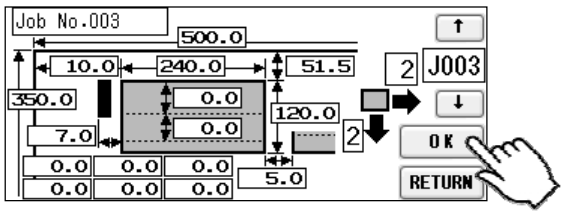

4 How to use options

4.1 How to attach the Y-perforator

① Remove the delivery guide.

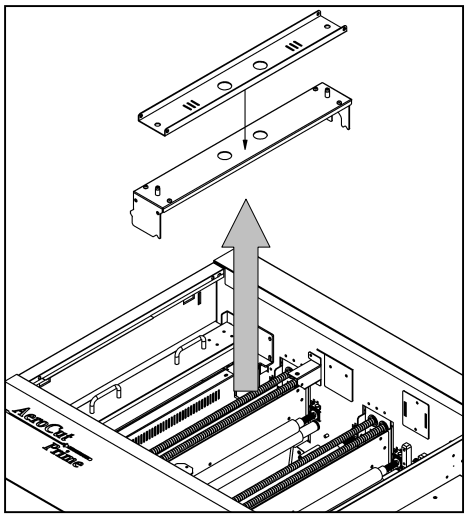

Note.

In case Perforator unit is not set in the machine, please attach the delivery guide instead in order to avoid paper jam.

② Attach Y-Perforator unit.

・Be sure to hold the perforator with both hands and attach it as shown in the figure.

・Fasten knobs to fix the position of the unit.

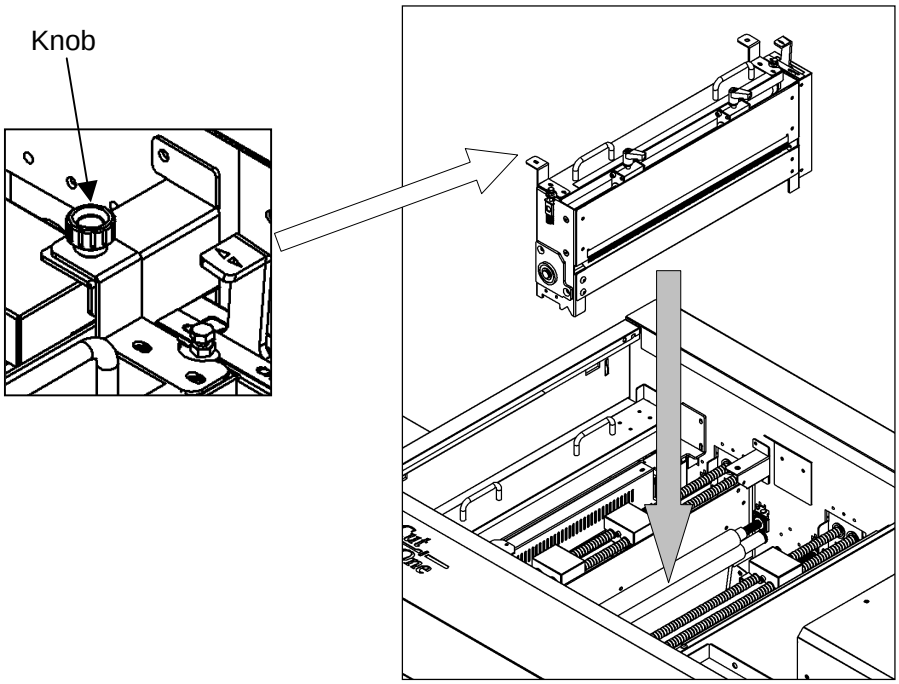

4.2 How to adjust the Y-perforation location

① When using the perforator, the screen will display where to fix the perforator, as shown below.

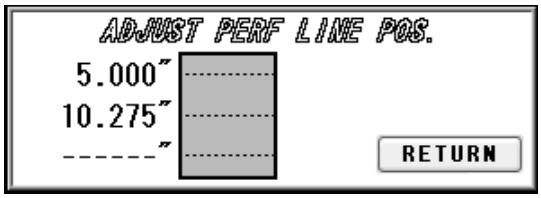

② If the upper blades are positioned to come into contact with the lower blades, the upper blade position can be adjusted with the perforator attached to the main body.

③ Loosen the clamp levers, move the perforator to the desired position based on the scale, and tighten the clamp levers firmly.

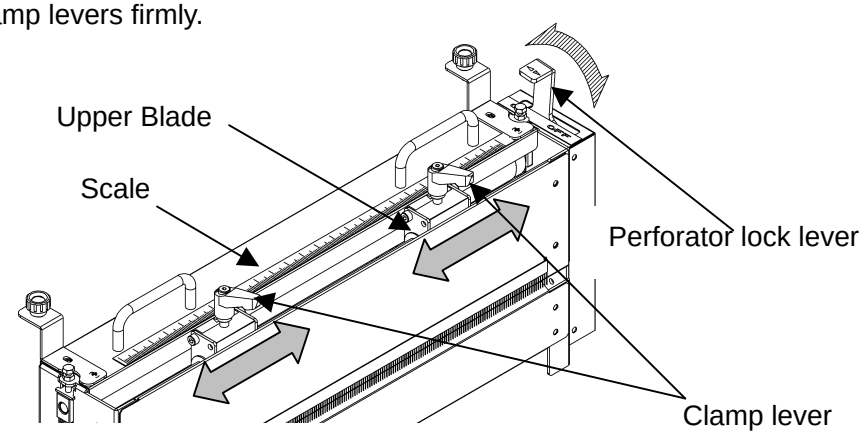

④ If the upper blades are not positioned to come into contact with the lower blades, remove the perforator from the main body for adjustment.

⑤ Loosen the two knurled head screws to remove the perforator cartridge cover.

⑥ Loosen the clamp levers, move the perforator to the desired position based on the scale, and tighten the clamp levers firmly.

⑦ Then, loosen screws with an accessory wrench and adjust the lower blade position to near the center of the upper blades.

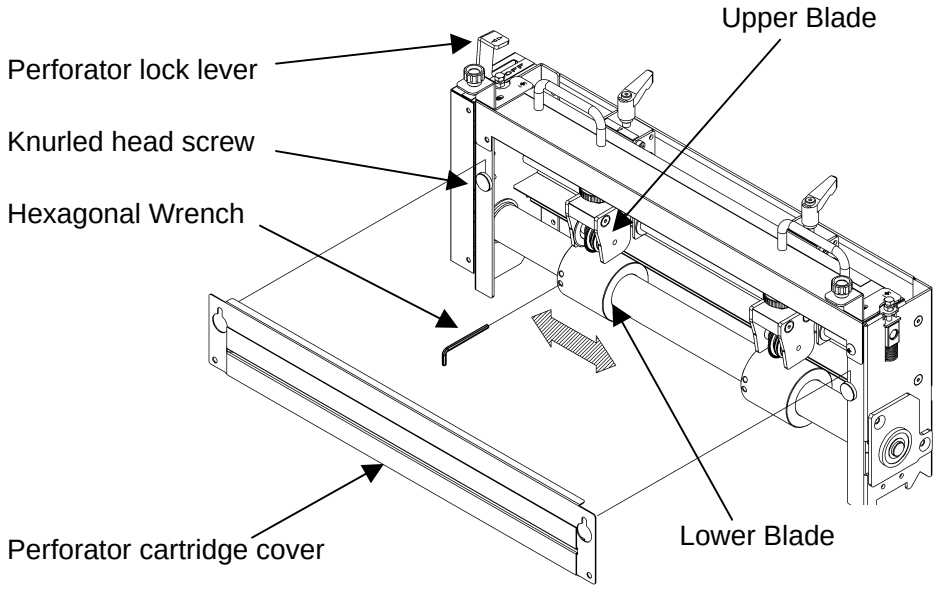

4.3 How to adjust the depth of Y-perforation

① Change in the paper thickness, recommend you adjust the depth of Perforation.

② The height of the upper blades can be individually adjusted.

③ Shift the perforator lock lever to the right and raise the upper blades.

④ Adjust a height adjustment screw in the up direction if it is cutting into too deeply, and in the down direction if not cutting into sufficiently.

Up = Shallow

Down = Deep

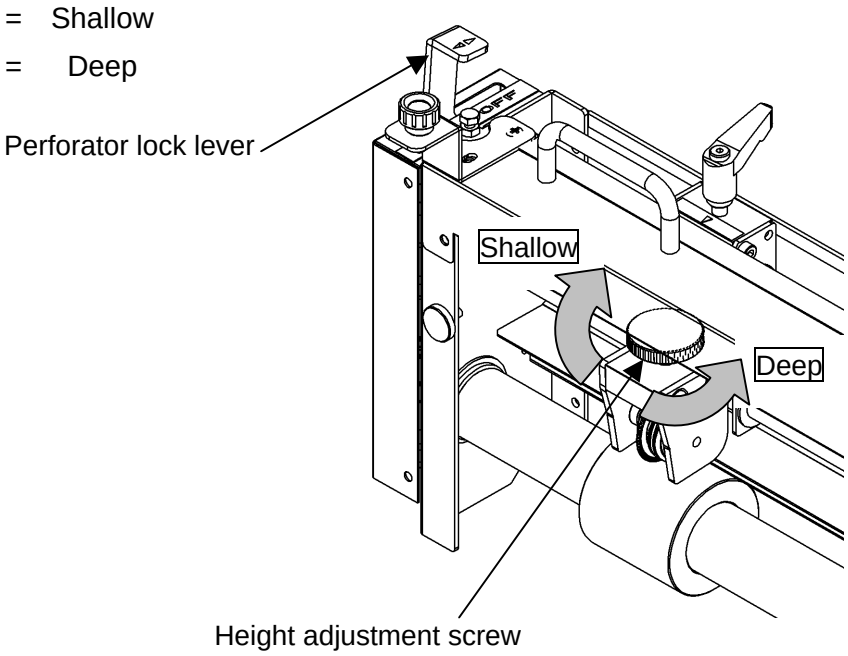

5 Adjustment

5.1 Adjustments on the paper feed section

・Adjustments are required when the machine is likely to feed double or skew.

Home screen

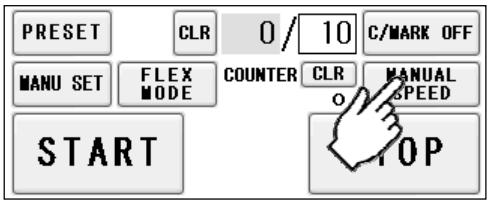

Manual speed screen

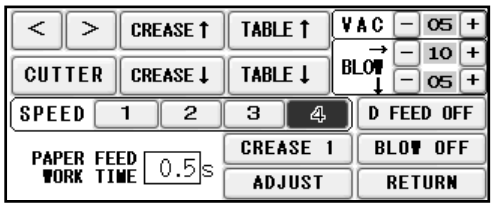

・Upper suction adjustment

「 VACUUM 」



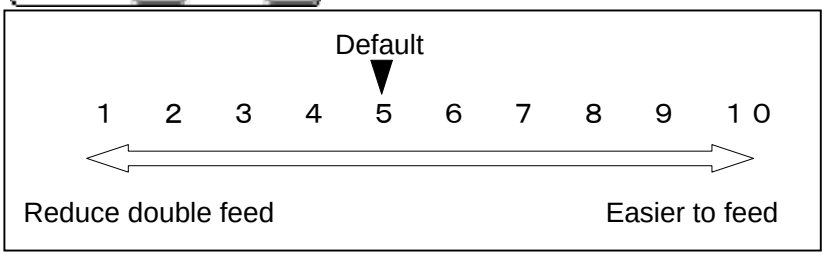

Double paper feeds may occur in case of feeding thin or low density papers. In such cases, turn down the VACUUM.

Empty feed may occur in case of feeding heavy paper. In such a case, turn up the VACUUM.

VACUUM will be turned off when the value is 0.

・Lower suction adjustment

「 BLOW - FRONT 」

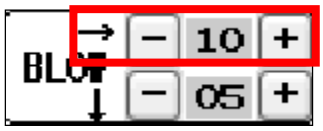

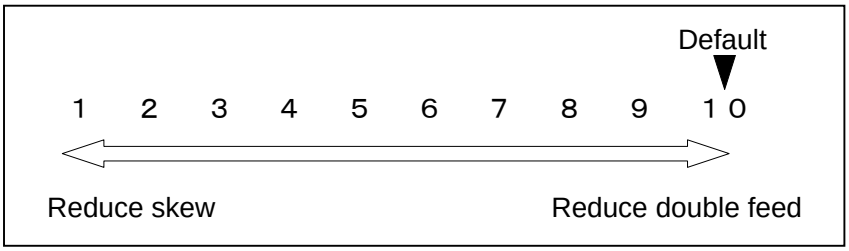

BLOW – FRONT will be turned off when the value is 0.

「 BLOW - SIDE 」

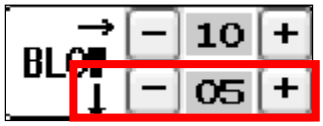

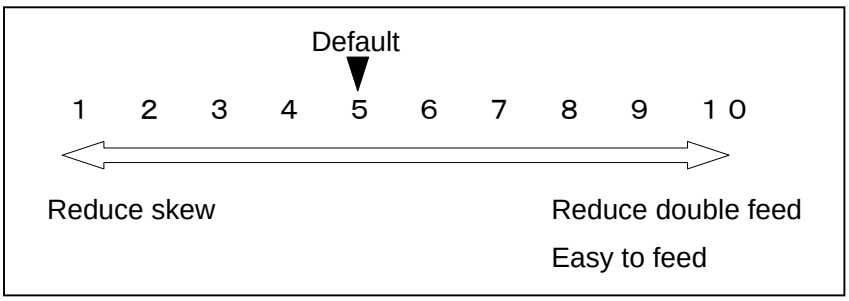

Thin paper might be bent and fed. In this case, turn down the side blower.

Empty feed may occur when paper is heavy. In such cases, turn up the blower.

Papers with statics may cause double paper feed. In such cases, turn up the blower.

BLOW- SIDE will be turned off when the value is 0.

・Air blow adjustment

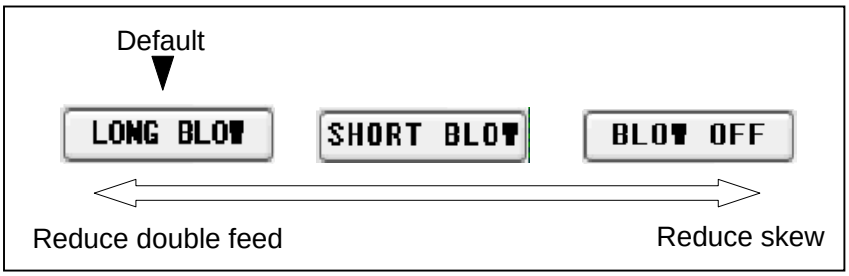

・PAPER FEED WORK TIME adjustment



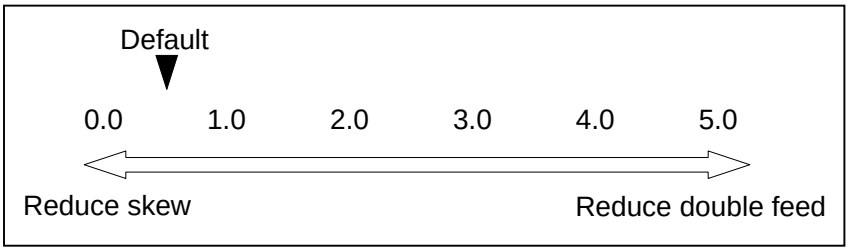

0.5 sec. is the default setting. Paper fed work time can be adjusted with a fraction of 0.1s.

・Sensitivity of Double feed sensor

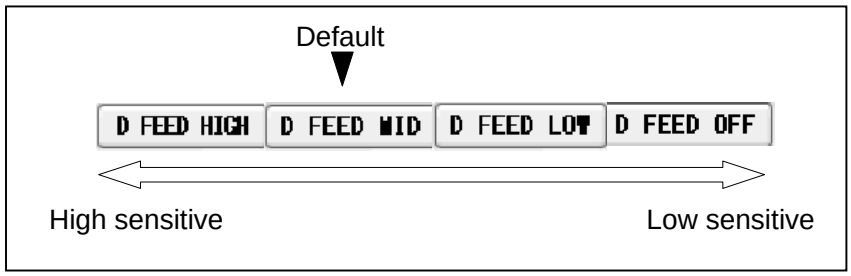

・If the machine detects double feed even with a single sheet, lower the sensitivity of the detection sensor.

・The detection sensor detects double feed by checking the edge of sheets as shown on the drawing. It is recommended not to print on the sheet edge.

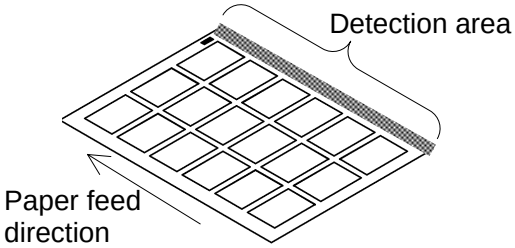

Note.

Papers which length is less than 9.843” may not be fed properly. Use the upper suction shutter to avoid empty feed.

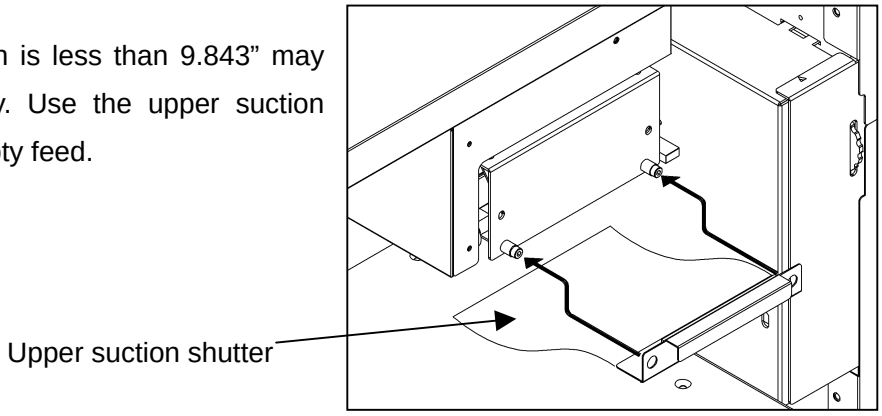

5.2 Speed change

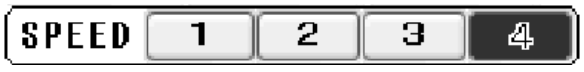

- There are four feeding speed levels.
- The currently selected speed level is inverted to black.

5.3 Skew adjustment

・If print is skew on the sheet, the angle of the side guide can be adjusted.

・The angle of the side guide changes as the skew adjustment dial is turned.

Set the sheets again. ☞ Page 12

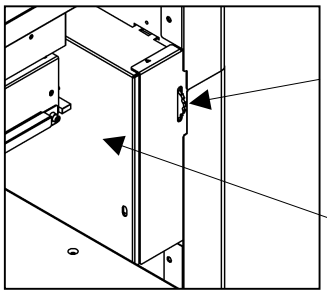

5.4 Creaser adjustment

・Turn the lever shown in the drawing below to adjust the crease depth.

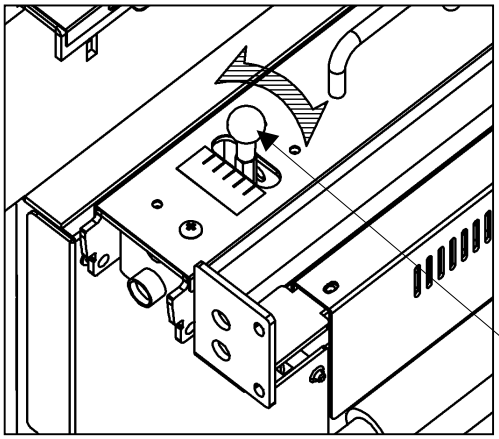

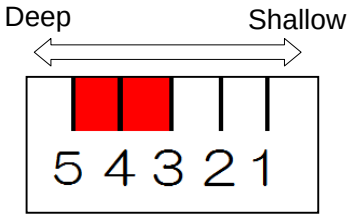

・If creasing pressure is not enough even the lever is adjusted, pressing CREASE 1 button on MANUAL/SPEED screen and changing creasing mode to CREASE 2 may help. CREASE 2 mode enables the machine to cycle the creaser twice at creasing positions, which results in deeper creases.

Manual speed screen

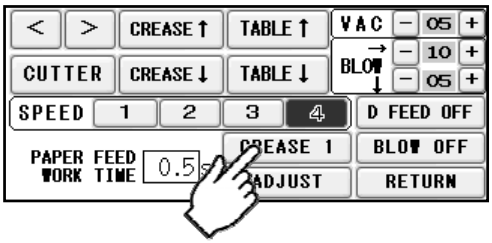

Note.

Use less than 3 in case of creasing on heavier paper than 300 gsm to avoid paper jam.

5.5 Fine adjustments on processing positions

5.5.1 In cases cutting positions don't match to image positions.

① Make sure the original sheets are printed correctly and consistently.

② Ensure that image positions correspond to inputted data.

⇒If it does not, amend input values so that they correspond to image positions.

③ If the cutting positions shifts along feeding direction, input a value on micro adjustment according to below picture.

In case cutting positions shifts toward the lead edge.

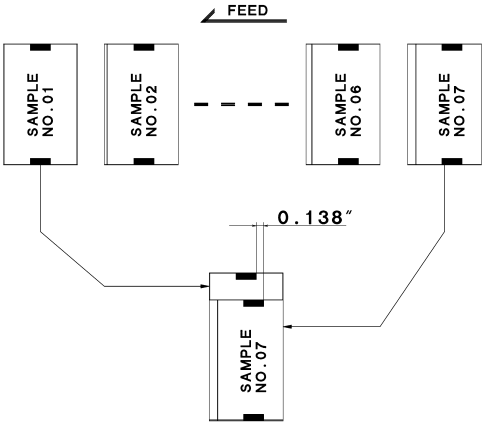

If the image position moves as the left drawing, increase the width of gutter.

Measure the difference of images between first card and the last card.

Revised values can be calculated by dividing the difference by number of gutters.

EX：

In case the gap is 0.138" and there are 6 gutters between cards, 0.138"÷6= 0.023" should be inputted.

MANU SET screen

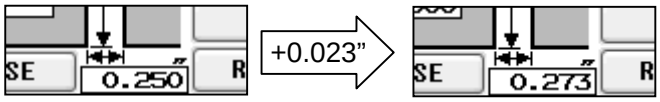

In case cutting positions shift towards the trailing edge.

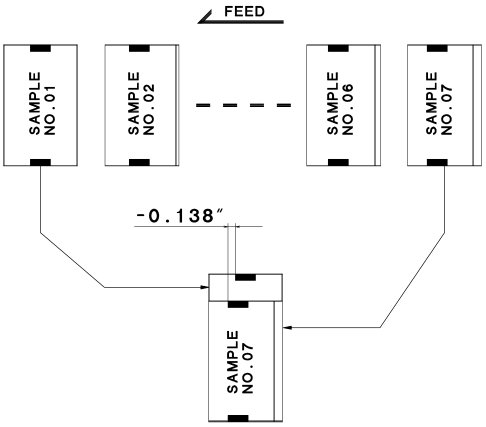

If the image position moves as the left drawing, decrease the width of gutter.

Measure the difference of image between first card and the last card.

Revised values can be calculated by dividing the difference by number of gutters.

EX：

In case the gap is -0.138" and there are 6 gutters between cards, -0.138÷6= -0.023" should be inputted.

MANU SET screen

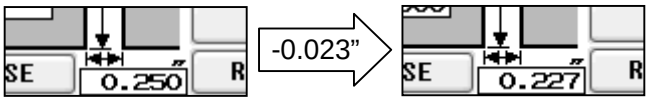

5.5.2 If the cut measurement does not match the input value

If the actual size and measurements of output differs from input values, calibrate the machine via ADJUST screen.

Manual speed screen

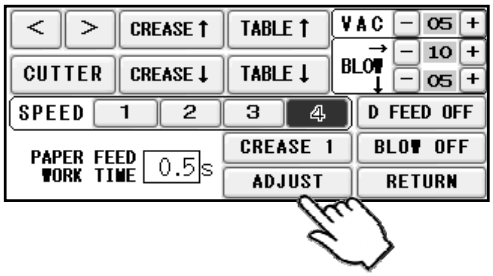

ADJUST screen

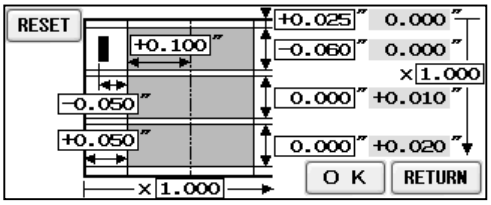

RESET	Reset the machine to the factory setting, all the adjusted values will be 0.
O K	Save the adjusted values and go back to Manual speed Screen
RETURN	Go back to manual speed Screen without making any changes.

① In cases the width of a card or a top margin is different from inputted values,
Input differences between inputted values and actual sizes of outputs into A,B,C and D.

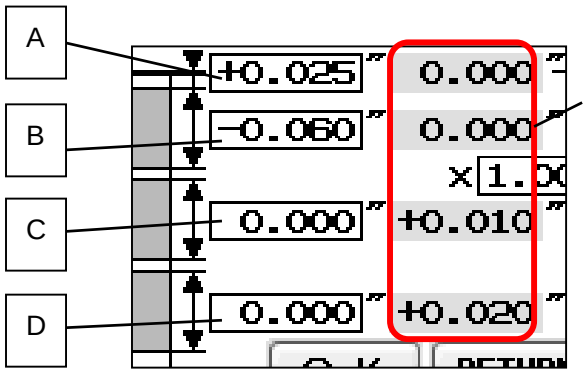

Total measurement that has been changed A, B, C, and D.

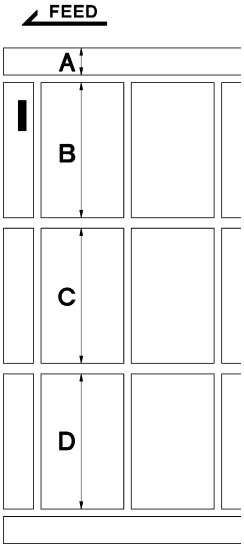

EX:

If the input value is 3.500” and cut measurement is 3.560”, input -0.060.

If the input value is 0.200” and cut measurement is 0.175”, input +0.025.

※：If you press OK after you input values into A, B, C and D, those values will be added to each total measurements which are circled on the image below. Then, A, B, C and D will be reset to 0.000.You can change the measurement by 0.002”.Each adjustment should be within±0.080” at one time. If the gap is more than ±0.080”, repeat the process until the desired measurement is reached.

② In case the length of leading edge is wrong:

<u>With cut mark</u>

Input the difference between inputted value and actual measurement into E.

EX:

In case input value is 0.400” and cut measurement is 0.450”, input -0.050 to E.

（You can input ±0.400” at the most）

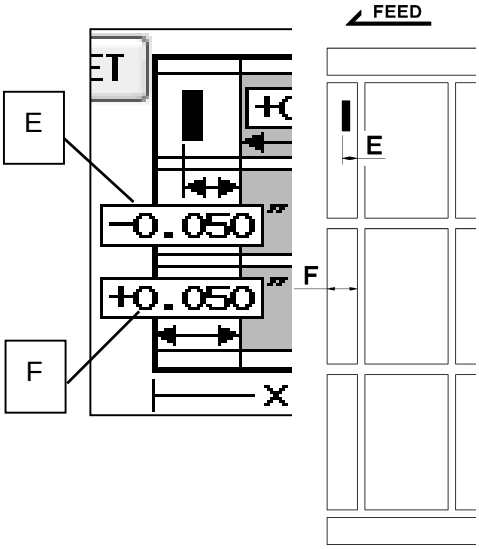

<u>Without cut mark</u>

Input the difference between inputted value and actual measurement into F.

EX:

In case input value is 0.600” and cut measurement is 0.550”, input +0.050 to F.

（You can input ±0.400” at the most）

③ In case creasing position is incorrect

Input the difference between inputted value and actual creasing position into J.

EX:

In case input value is 2.000” and the actual creasing position is 1.900” length, input +0.100 to J.

（You can input ±0.400” at the most）

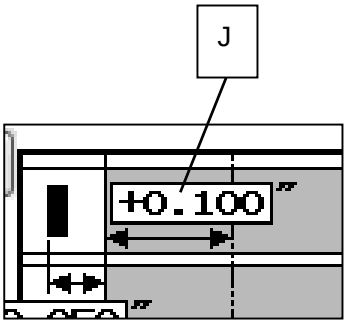

④ Others

<u>In case you amend the value according to expansion or contraction of printing.</u>

Input magnification into L if the printing is stretching to the feed direction.

Input magnification into M if the printing is stretching to the width direction.

Please note that changing magnifications results in changing actual measurements of outputs.

EX:

If printing should be 4.000” width, but actual printing is 4.080”, input 0.980 (4.00/4.08) into L.

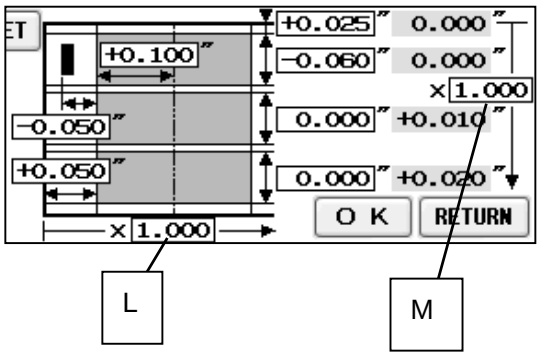

（”L” must be from 0.500 times to 2.000 times and “M” must be from0.800 times to 1.200times）

6 Manual control

6.1 Manual control screen

Home screen

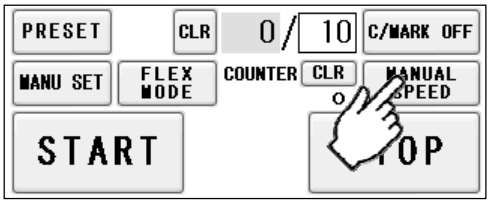

Manual speed screen

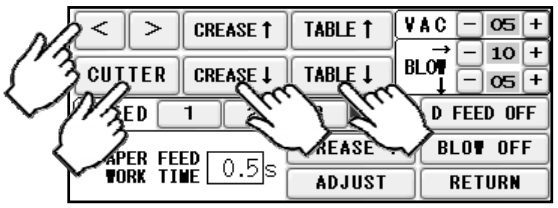

<	Feed roller will rotate. Inching.
>	Feed roller will rotate in reverse. Inching.
CUTTER	Guillotine will move once.
CREASE ↑ CREASE ↓	Crease will move.
TABLE ↑ TABLE ↓	Feed table will move.

6.2 Paper jam

① Enter Manual speed screen, press < > buttons to inch the rollers forward / backward and remove the jammed paper.

②If paper is stuck around the guillotine section, press CUTTER to cycle the guillotine to chop jammed paper.

Manual speed screen

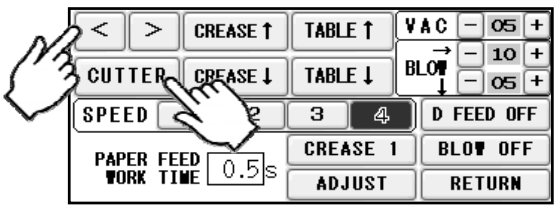

7 Error messages

1. 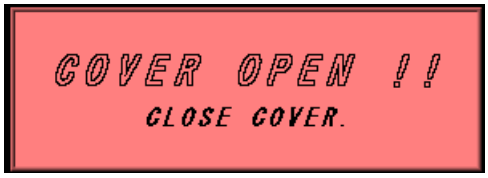

Cover Open error

Safety cover (☞ Page 6) might be open.

Make sure to close the Safety cover closed.

2. 

Timeout error 1

Paper was not fed within a set time period.

Check the paper feeder.

3. 

Timeout error 2

Paper did not pass through within a set time period.

Remove the paper remaining inside the machine.

4. 

Double feed error

Check the paper or paper path.

5. 

Cut-mark error

Cut-mark was unable to be detected. Check the cut mark.

Eject the paper inside the machine.

Note.

Cut-mark sensor detects the black mark by infrared light. Some types of toner or ink may reflect the infrared light and cause the sensor not reading the cut-mark. Please inactivate the cut-mark registration in such cases.

6.



Cut Paper Jammed error 1

Paper remains inside the machine. Remove the paper.

7.

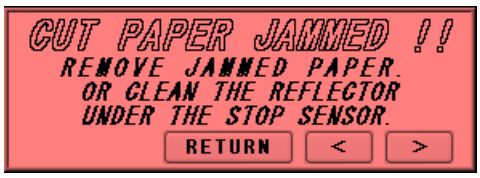

Cut Paper Jammed error 2

Paper remains inside the machine. Remove the paper.

8.

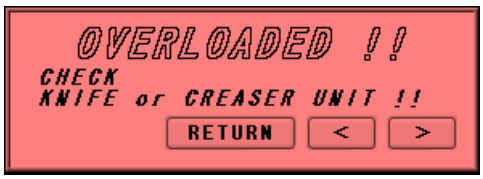

Overload error 1

Cutting or creasing did not complete within a set time period.

Remove the paper remaining inside the machine.

9.



Overload error 2

An overloading error occurred at the feed table.

Check the feed table.

10.



Overload error 3

An overloading error occurred at the slitter.

Check the blinking slitter.

11.



Update message

This error message appears as a warning when proceeding to another screen without saving the corrected dimensions in the MANU SET or FLEX MODE screen. Press OK if you want to proceed to the other screen; otherwise, press RETURN.

12.

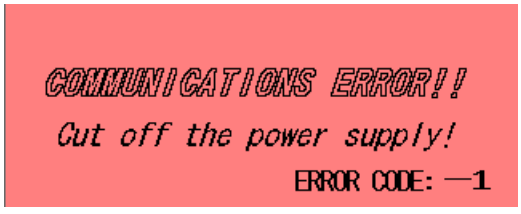

Communication error

Communication with the touch panel is not possible.

Turn off the power, and turn it on again after 5 seconds or longer.

13.



Servo error

Servo motor error detected. Turn off the power, and turn it on again after 5 seconds or longer.

14.

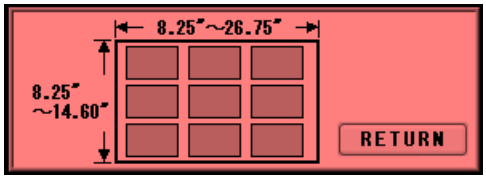

Paper size error

Correct the paper size to fit in the value range below.

15.

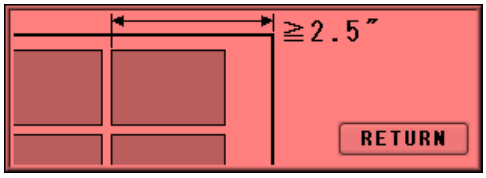

Final cutting measurement error

Correct the final cutting measurement to exceed the value specified below.

16.

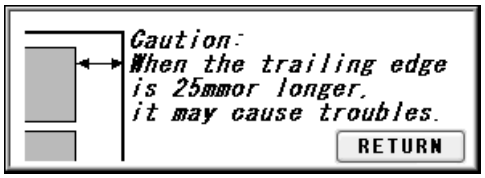

Back margin warning

When the trailing edge is 1.000” or longer, it may cause troubles.

17.

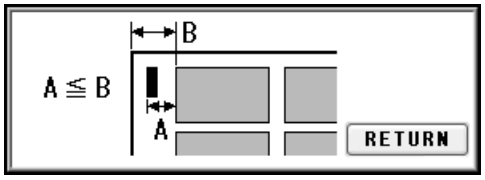

Leading edge margin and cut mark margin warning

Correct the measurement so that the leading margin becomes larger than the cut mark margin.

18.

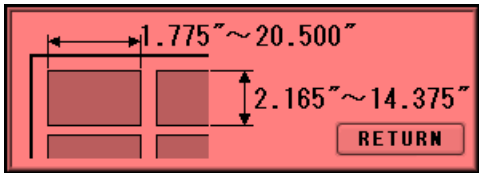

Cutting measurement error

Correct the cutting measurement to fit in the value range below.

The maximum value is subject to change depending on the entered paper size.

19.

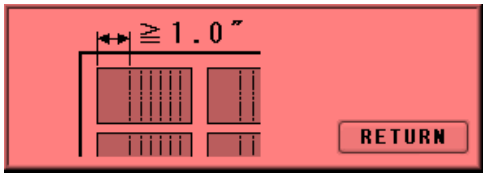

Crease front margin error

Correct the crease front margin to exceed the value specified below.

20.

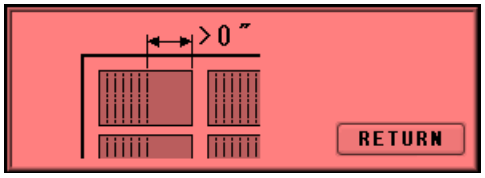

Crease back margin error

Correct the crease back margin to exceed the value specified below.

21.

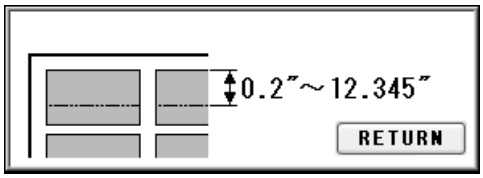

Perforation location warning

Correct the perforation location to fit in the value range below. The maximum value is subject to change depending on the entered paper size.

22.

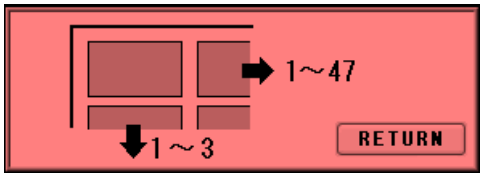

Cut piece number error

Correct the number of cut pieces to be in the value range below.

The maximum number of pieces is subject to change depending on the operation.

23.

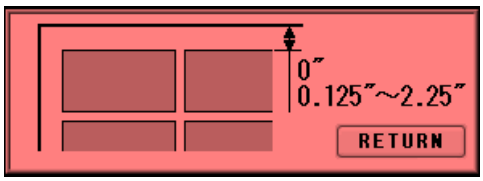

Top margin error

Correct the top margin to fit in the value range below.

24.

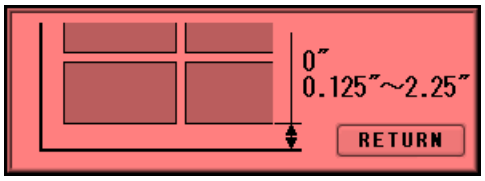

Bottom margin error

Correct the bottom margin to fit in the value range below.

25.

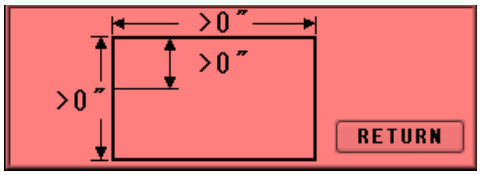

FLEX MODE input error 1

This error results when the three input values shown in the following figure are “0” or lower at FLEX MODE time.

26.



FLEX MODE input error 2

Slitter units positioning error.

Slitter position is out of valid range. Check paper size and input data.

27.

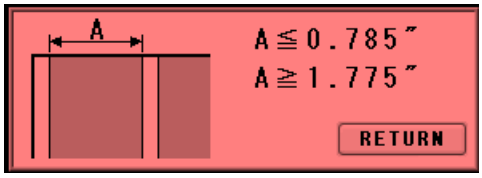

FLEX MODE input error 3

Make sure for the first cut line must be 0.785” or shorter from the edge of the paper. If you want to cut off 0.785” or more, please cut off 0.785” or less at first and then cut off again and again. If you try to move the slitter cut line at 1.85” or more position, the slit will be ejected on Paper ejection table instead of waste box.

28.

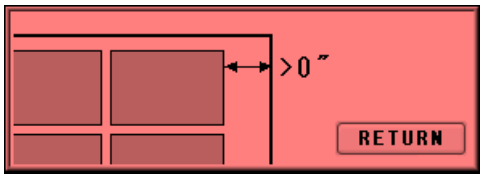

FLEX MODE input error 4

Back margin error.

Correct the back margin to fit in the value specified below.

29.



Guillotine error

The cutter blade has moved and is staying at lower position.

Move the cutter to top dead center.

30.



Crease error

The creaser has moved and staying at upper position.

Move the creaser to bottom dead center.

8 Troubleshooting

1. Papers are not fed well.
   - Turn up Upper suction (☞ Page 30)
   - Turn up Side blow (☞ Page 30)
   - Shorten the PAPER FEED WORK TIME. i.e. less than 1.0 (☞ Page 30)
   - Check if the paper guides on the feed table hold sheets too tight.
   - Make sure that the paper edges are not curled or waved.
   - Make sure that the papers are not heavily electric static charged.

2. The machine feeds double-sheets.
   - Turn down Upper suction (☞ Page 30)
   - Turn up Lower suction (☞ Page 30)
   - Turn up Side blow (☞ Page 30)
   - Make sure that the papers are not heavily electric static charged.
   - Lengthen the PAPER FEED WORK TIME. i.e. 2.0 (☞ Page 30)

3. The machine doesn't detect double-feed properly.
   - The machine detects the density of the first fed sheet and compares the density of the next sheet to the first one. Therefore, the machine cannot detect double-feed when it occurs with the first fed sheet.
   - Adjust the sensitivity of the double-feed detection sensor. (☞ Page 30)
   - The detection sensor detects double feed by checking the edge of sheets as shown on the drawing. It is recommended not to print on the sheet edge. (☞ Page 30)

4. The machine detects double-feed mistakenly.
   - Adjust the sensitivity of the double-feed detection sensor. (☞ Page 30)
   - The detection sensor detects double feed by checking the edge of sheets as shown on the drawing. It is recommended not to print on the sheet edge. (☞ Page 30)

5. Cut skewing
   ① Make sure that the stock is put on the feed table correctly. (☞ Page 12)
   ② Check whether the skewings are consistent or inconsistent.
      If skewings are consistent :
         + Make the skewing adjust via the skew adjustment dial. (☞ Page 33)
         + Set the paper guides without play.
           Do not set them too tight as the sheet may not be fed well.

If skewings are inconsistent :

+ Turn down Side blow. (☞ Page 30)
+ Shorten the PAPER FEED WORK TIME. i.e. less than 1.0 (☞ Page 30)
+ Make sure that the sheets are printed consistently and aligned well.

6. Paper jam often occurs.

・Make sure that papers, paper strips or paper dusts not remain inside of the machine.
・Check the conditions of the paper stock.(☞ Page 9)

9 Product specifications

Specifications	
Slitter	4 sets (6 slitter blades)
Guillotine	1 set
Creser	1 set
Y perforator	2 set(Depends on configuration)
Maximum paper size	14.6” x 26.75”
Minimum paper size	8.25” x 8.25”
Minimum work size	2.165” x 1.775”
Paper weight	120-400g/㎡ Depending on paper
Maximum paper curl size	±0.125”
Paper type	Offset, Coat, UVcoat, Glossy, Laminate Depending on paper
Paper feeding method	Tri-suction upper belt feeding mechanism
Input tray capacity	MAX4.000”
Speed	8.8 sheets per minute (21 business cards from SRA3)
Machine dimensions [inch]	W42.2”x D28.2”x H42.2” (Occupancy area: W76.8” x D28.2” x H60.3”)
Net weight	530lbs (Depends on configuration)
Power supply	Single phase 110- 120VAC, 50/60Hz, 3.6-3.3A
Power consumption	400W
Use temperature	23 to 104°F (-5 to 40°C)
Preservation temperature	-13 to 149°F (-25 to 60°C)
Use temperature humidity	45～85%RH
Preservation humidity	25～100%RH
Use the uplands	～1000M
One’s tolerance level	200～240V +6%, -10%
Over voltage category	Category Ⅱ according to IEC60664-1
Pollution degree	Degree 2 according to IEC60664-1

Keep this “Operation Manual” at an appointed place with care so that it may be available whenever required.

If this “Operation Manual” is stained or lost, make contact with the distributor or our salesman or customer service section to ask for a new operation manual after making sure of its contents.

When ordering consumables or parts, be sure to specify the machine model.

UCHIDA YOKO CO., LTD., TOKYO, JAPAN