Wire-actuated encoder SG150
Robust design with 15 m measuring length

Profile

- Very compact design
- Measurement lengths up to max. 15000 mm
- Flexible wire outlet
- Wire-actuated encoder for rotary encoder with 58 mm servo-flange
- Robust design
- Very robust measuring rope (stainless steel)



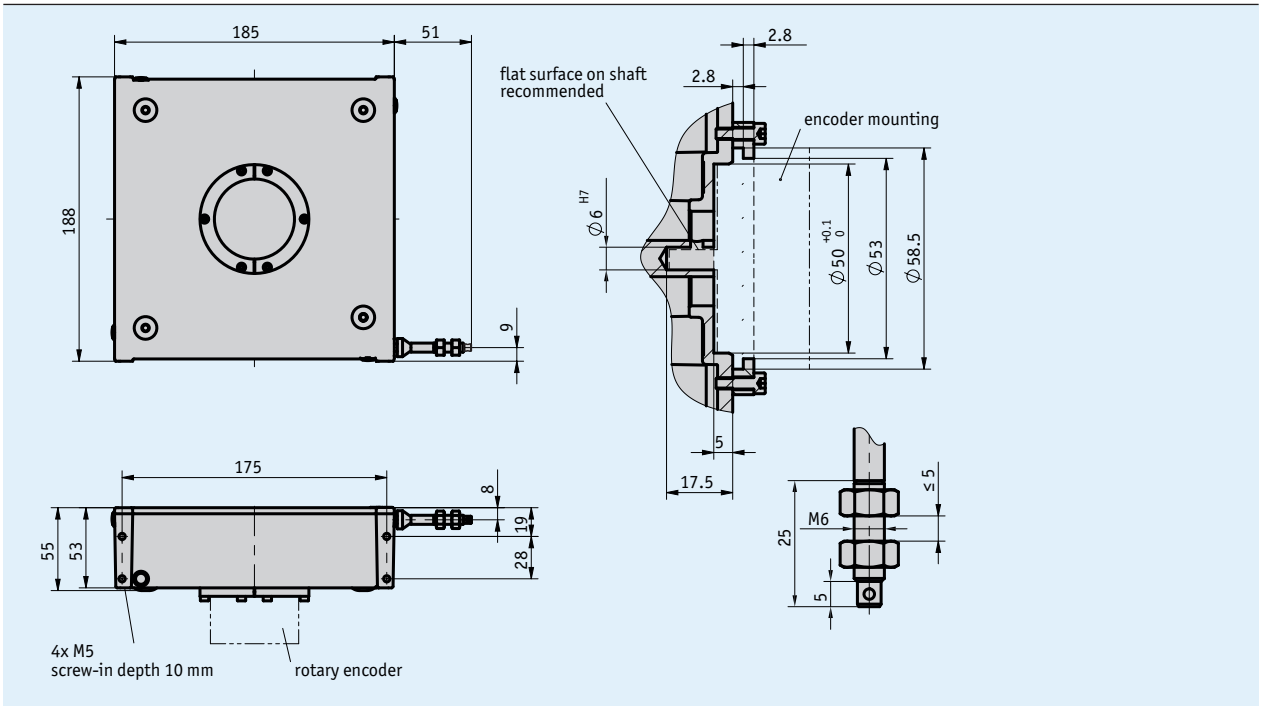

Mechanical data

Feature	Technical data	Additional information
Housing	aluminum die-cast	
Wire design	ø0.87 mm	steel wire, plastic-coated
Extension force	≥15.5 N	
Measured distance/ rope drum revolution	500 mm	
Weight	~2.5 kg	without rotary encoder

Electric data

Rotary encoders suitable for the SG150 are featured in RotoLine catalogue 2. Depending on the output signals the following are suitable for...

- Analog outputs such as current or voltage: AV58M
- Incremental outputs: IV5800
- Absolute outputs: WV58MR, WV36M/SSI, WV36M/CAN

The technical specifications for these devices are given in the respective data sheet. A number of transmitter versions of various manufacturers can also be used.

System data

Feature	Technical data	Additional information
System accuracy	±0.1 %	relating to measuring length (mm)
Repeat accuracy	±0.2 mm	per direction of approach
Travel speed	≤2.4 m/s	

Ambient conditions

Feature	Technical data	Additional information
Ambient temperature	-40 ... 80 °C	
Protection category	see rotary encoder	

Order

- **Ordering information**

  One or more system components are required:

Absolute encoder AV58M	www.siko-global.com
Incremental encoder IV5800	www.siko-global.com
Absolute encoder WV58MR	www.siko-global.com
Absolute encoder WV36M/SSI	www.siko-global.com
Absolute encoder WV36M/CAN	www.siko-global.com

- **Ordering table**

Feature	Ordering data	Specification	Additional information
Encoder type	OG6	without encoder	
	S6	a great variety of rotary connectors can be connected	

- **Order key**

SG150 - 15000 - SK - [ ]
A

Scope of delivery: *SG150, User information*

Accessories:

Guide roller UR	*www.siko-global.com*
Wire extension piece SV	*www.siko-global.com*

subject to technical alteration • 2018/06/14 • 13:18