GERMAN POOL 德國寶

煙導式抽油煙機
Chimney Type Range Hood

RHM 系列 SERIES

6328S / 7328S / 8328S / 9328S /
6428S / 7428S / 8428S / 9428S /

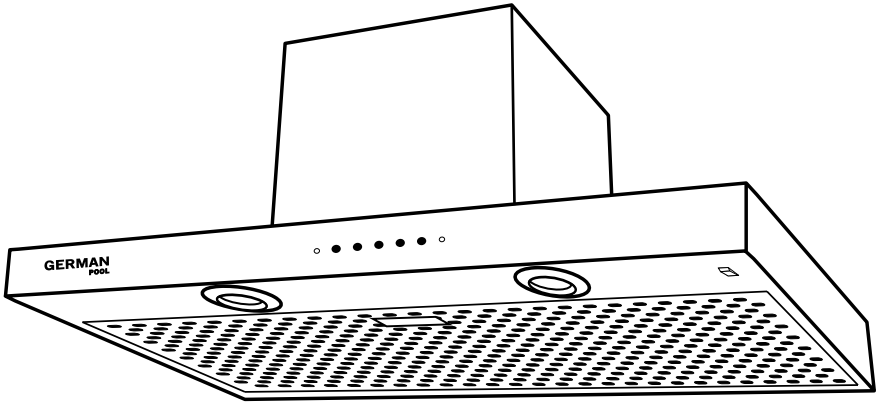

即時網上登記保用
Online Warranty Registration

在使用之前請詳細閱讀「使用說明書」及「保用條款」，並妥善保管。
Please read these instructions and warranty information carefully before use and keep them handy for future reference.

使用說明書 USER MANUAL

目錄 Table of Contents

注意事項 Notice Before Use 03

產品結構 Product Structure 05

安裝說明 Installation Instructions 06

電路圖 Wiring Diagram 07

操作說明 Operating Instructions 08

清潔與保養 Care & Maintenance 11

常見故障及處理 Troubleshooting 12

技術規格 Technical Specifications 13

保用條款 Warranty Terms & Conditions 15

注意事項 Notice Before Use

重要說明

為安全起見，初次使用產品前請先細閱本說明書，並保存說明書，以便作參考之用。

本產品只供家居使用。請必須依照本說明書內的指示安裝及操作。

1. 本產品並不適用於兒童、身體或心智殘障、缺乏經驗或知識的人士使用和玩樂，除非該人士得到負責保障其安全的人士的監管或指引。
2. 請將產品遠離兒童。不要讓兒童單獨使用本產品。
3. 為免發生危險，若發現電源線有任何損壞，必須停止使用產品，並立即聯絡本公司或合資格技術人員進行更換。
4. 清潔、維修或拆除抽油煙機前應先切斷電源。
5. 電源插座必須安裝接地線。
6. 請接駁獨立排氣喉將油煙排往室外。
7. 抽油煙機不可與燃氣或使用其他能源之器具共同使用同一排放管道。
8. 抽油煙機頂部的圓形接駁口須接駁風管，將油煙排出室外，須用6吋直徑風管。
9. 抽油煙機安裝於氣體爐上方時，抽油煙機底部距離爐面700±50㎜之間為宜。
10. 切勿在抽油煙機下直接燃點明火。

Important

For safety purpose, you should read the instructions carefully before using the appliance for the first time. Save the instructions for future reference.

The appliance is designed for domestic use and may only be installed and operated in accordance with these instructions for use.

1. The appliance is not intended for the use of, and playing with, by persons (including children) with reduced physical, sensory or mental capabilities, or any individual lack of experience and knowledge, unless they have been given supervision or instruction.
2. Keep children away from the appliance. Do not let them use the appliance without supervision.
3. If the power supply cord is damaged, do not operate the appliance. Contact German Pool or a licensed technician for a replacement immediately.
4. Disconnect the power supply before cleaning, repairing or dismantling the range hood.
5. The range hood must be earthed.
6. Connect the range hood with an independent air vent to exhaust lampblack.
7. The air must not be discharged into a venting pipe that is used for exhausting fumes from appliances burning gas or other fuels.
8. The connection opening at the top of the range hood must be connected to the exhaust pipe for exhausting fumes to the outdoors. Exhaust pipe of 6 inches in diameter should be used.
9. The appliance should be positioned 700±50mm above the cooking range.
10. Do not flambe under the range hood.

注意事項 Notice Before Use

11. 安裝、清潔、更換燈泡及拆除抽油煙機時請戴上安全手套，以免受傷。

12. 請勿直接潑水噴淋機身，以免損壞電器機件。

13. 德國寶抽油煙機抽吸力特強，大部分油煙在抽油煙機操作時已被抽出室外，故此集油器的油污量很少，請放心使用。

14. 當使用抽油煙機時，如房間內同時使用燃氣或其他能源的器具，房間必須有足夠通風。

15. 用戶必須遵照有關排放空氣的條例來安裝及使用本產品。

16. 抽油煙機易沾油污的部份之表面均須最少每星期進行清洗一次，避免油污因長時間積聚而引致火警危險。

11. Please wear safety gloves for installation, cleaning, light bulb changing and dismantling in order to prevent injuries.

12. To protect electrical parts, do not splash or spray the range hood with water.

13. German Pool range hood has high venting efficiency. Most of the grease vapor will be exhausted through the air vent when the range hood is in operation. Only very little amount of residual oil will be collected in the Oil Collecting Tray.

14. There should be adequate ventilation in the room when the range hood is used along with appliances that burn gas or other fuels.

15. Regulations concerning the discharge of air have to be fulfilled.

16. To prevent fire hazard in case of oil build-up, the easily-soiled parts must be cleaned at least once a week.

產品結構 Product Structure

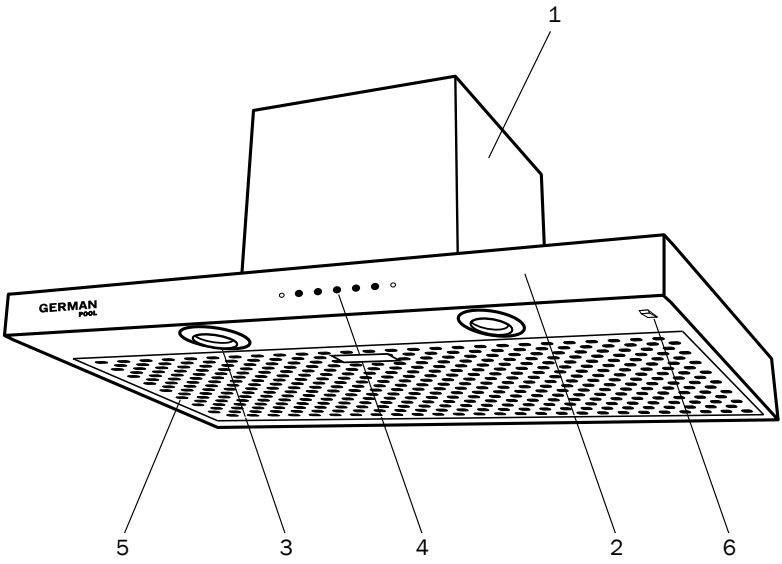

1. 摩打風箱
2. 機身
3. 照明燈
4. 操作面板
5. 金屬底板(內附集油杯)
6. 總開關掣

1. Motor Cover
2. Body
3. Light
4. Control Panel
5. Metal Panel (oil collector inside)
6. Main Power Switch

安裝說明 Installation Instructions

安裝前注意

必須由專業合資格技術人員安裝及維修抽油煙機。

安裝前先接上電源檢查照明與摩打開關是否正常操作。

Pre-installation Notice

The range hood must be installed and repaired by authorized qualified technicians.

Before installation, plug in and check if all switches are functional.

周圍環境

抽油煙機四周應避免門窗過多，而產生過大之空間對流。如果油煙未上升至25cm有效吸力範圍，抽油煙機則無法發揮正常效果。

Installation Environment

For efficient air extraction, avoid opening too many windows surrounding range hood for this will cause air convection which prevents cooking fumes from rising to 25 cm (the effective suction / exhaust area).

安裝高度

抽油煙機底部距離爐面700±50mm之間為宜，距離越接近700mm，抽油煙效果越佳 (如圖A)。

Height of Installation

The appliance should be positioned 700 ± 50mm above the cooking range. A distance that is near 700mm results in higher venting efficiency (Fig A).

機體保持水平

確定安裝位置時，機體應保持前後左右水平，若機體傾斜積油會漏出 (如圖B)。

Keep the Hood Level

The installation of the hood should remain level, in order to prevent oil from spilling over from oil collectors (Fig B).

安裝方法

根據抽油煙機兩掛耳之間的距離及掛耳兩孔間距的大小，在牆上打孔裝上膨脹螺絲固緊，將抽油煙機上的掛耳掛入螺絲中，用螺母旋緊即可。

Installation Method

Drill holes in the wall according to the distance between the 2 mounting brackets and the diameter of the 2 holes on the mounting bracket. Install the anchor screws in the holes. Fix the range hood onto the screw and secure with nuts.

風管長度

抽油煙機頂部的圓形接駁口須接駁風管，將油煙排出室外，須用4, 5, 6吋直徑風管。 風管長度之標準接法 (如圖C)。排風出口至機體之距離，應儘量縮短，以免氣流擠壓於風管內，影響其排風效果。

Length of Exhaust Pipe

The connection opening at the top of the range hood must be connected to the exhaust pipe for exhausting fumes to the outdoors. Exhaust pipe of 4, 5, 6 inches in diameter should be used. The length of the exhaust pipe should be minimized to avoid air turbulence inside the pipe (Fig C).

圖A Fig A

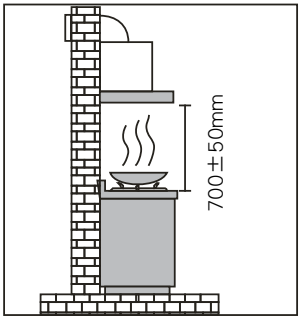

圖B Fig B

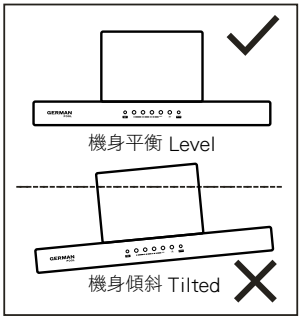

圖C Fig C

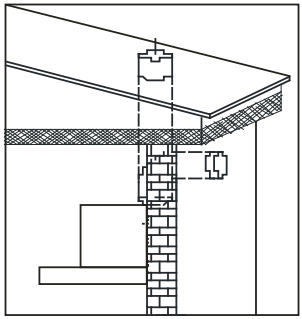

電路圖 Wiring Diagram

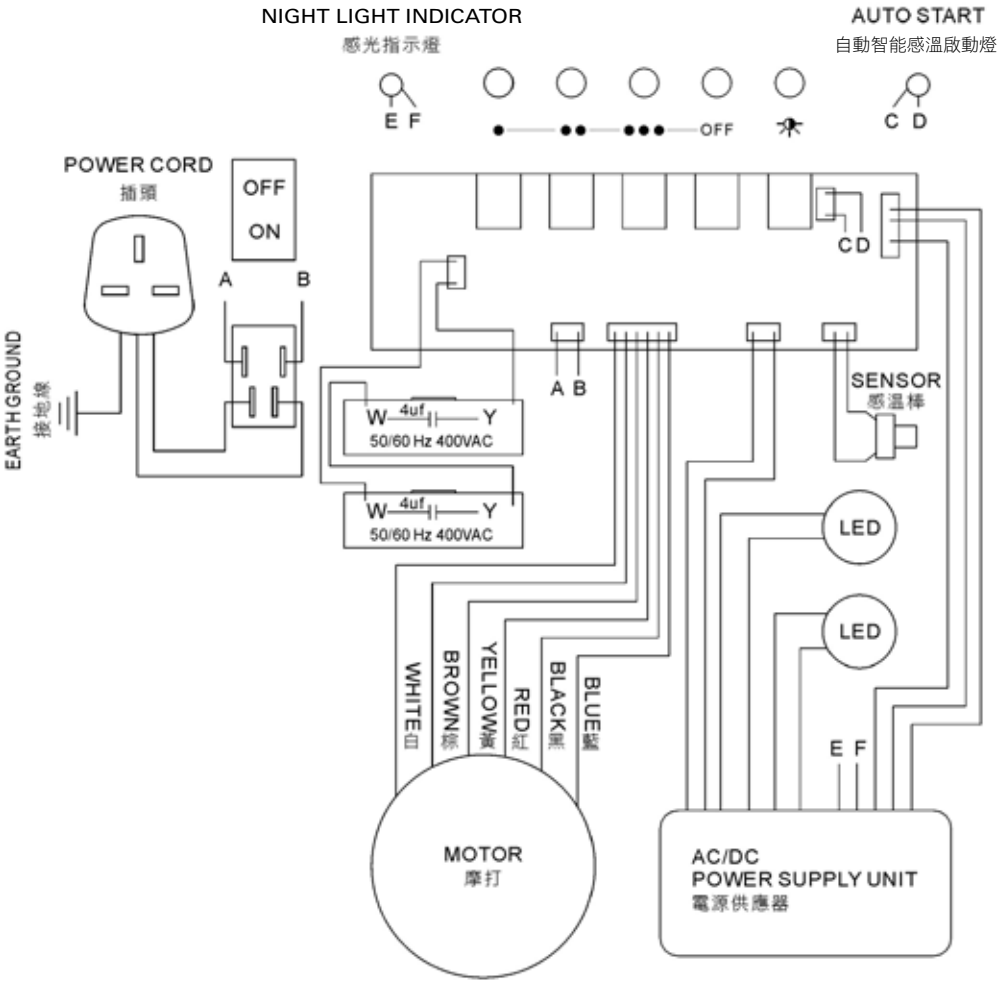

操作說明 Operation Instructions

重要事項

1. 抽油煙機風管必須連接於屋外，嚴禁直接排進屋內。
2. 使用氣體爐或其他燃料烹飪時，室內必須有足夠通風空間。
3. 抽油煙機之排氣管嚴禁與氣體管或其他燃料排氣管相通。
4. 通電前須注意電源電壓是否與機身銘牌標示之電壓一致。

Important

1. The exhaust duct must be exposed outdoors.
2. There should be adequate ventilation in the room when a gas cooking range or other fuels are in use for cooking.
3. The air from the range hood must not be discharged into a venting pipe that is used for exhausting fumes from appliances burning gas or other fuels.
4. Ensure the electrical rating shown on the rating plate corresponds with the power supply in your house before switching on the power supply.

操作面板 Control Panel

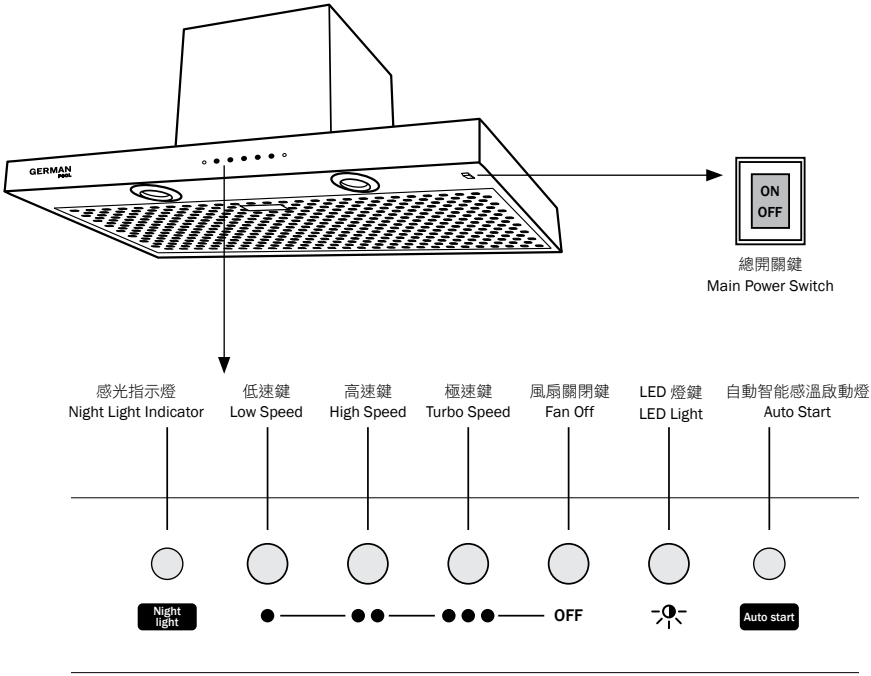

操作説明 Operation Instructions

I. 總開關 

- 當總開關掣切換至ON時，抽油煙機即接上電源，處於待機狀態，可啟動機上任何功能。

- 當總開關掣切換至OFF時，機上所有功能，包括自動感應輔助夜間照明及自動智能感溫，將不能啟動。如要使用任何功能，總開關鍵必先切換至ON。

II. 風速 ●——●●——●●●——OFF

- 選擇風速：開啟抽油煙機後按所需風速鍵，選擇風扇速度。

●低速 ●●高速 ●●●極速

- 關閉風扇：欲關閉風扇只須按風扇關閉鍵。

注意：切勿同時按兩個風速鍵，否則會引致摩打損壞。

III. 自動智能感温啟動 Auto start

注意：使用自動智能感温啟動前，請先確認本機處於待機狀態。

- 當煮食爐或電爐正在使用中而並未啟動抽油煙機風扇時，只要抽油煙機底下的溫度達55-60℃(130-140°F)時，自動感溫將會啟動風扇以高速運轉1分30秒後停止。

- 若自動運轉完畢而用戶仍未啟動任何風速，只要抽油煙機底下的溫度達55-60℃(130-140°F)時，風扇仍會如上一步驟啟動。

I. Main Power Switch 

- When it is switched to ON, the range hood is connected with power and at stand-by status. All functions can be activated.

- When it is switched to OFF, all functions including Heat-Activated Auto Start and Automatic Night Light cannot be activated. To activate any functions, it must be switched to ON.

II. Fan Speed ●——●●——●●●——OFF

- Select fan speed: After pressing the Main Power Switch, select fan speed with one of the Fan Speed buttons.

● Low speed ●● High speed ●●● Turbo speed

- Fan off: To turn off the fan, just press the Fan Off button.

Note: Do not press two Fan Speed buttons at the same time or else the motor will be damaged.

III. Heat-Activated Auto Start Auto start

Note: Make sure the range hood is at stand-by status thus heat-activated auto start can operate.

- When the gas cooking range is working without the fan turned on, and the air temperature under the range hood reaches 55-60℃ (130-140°F), thermal sensor will activate the fan to run at high speed for 1.5 minutes automatically.

- If the temperature under the range hood still reaches 55-60℃ (130-140°F) after the auto start has completed, the fan will be activated again as described in the step above.

註：

- 自動智能感温經第一次啟動，當風扇停止運轉後，若要持續保持風扇運轉，須按下所需風速鍵 ●——●●——●●●。

Note:

- After the first activation of auto start, you need to press the desired Fan Speed ●——●●——●●● if you want to keep the fan running.

操作說明 Operation Instructions

IV. LED 燈

- 注意：使用LED照明前，請先確認本機處於待機狀態。
- 按LED燈鍵 開啟照明。
- 再按一次LED燈鍵 關掉照明。

IV. LED Light

- Note: Make sure the range hood is in stand-by status before activating LED lighting.
- Press the LED Light button to turn it on.
- Press the button again to turn it off.

V. 自動感應夜間輔助照明 Night light

注意：使用自動夜間感應輔助照明，請先確認本機處於待機狀態。

- 當抽油煙機四周環境已漸暗或全暗時，感光指示會以LED燈原亮之20%自動啟動夜間照明功能。
- 當抽油煙機四周環境已漸亮或全亮時，輔助照明將自動熄滅。

V. Automatic Night Light Night light

Note: Make sure the range hood is in stand-by status before activating night light function.

- When the surroundings are getting darker or completely dark, the night light function will be automatically activated at 20% of LED light's normal brightness.
- When the surroundings are getting brighter or completely bright, the senor will turn off the night light function automatically.

清潔與保養 Care & Maintenance

重要事項

- 為達致本產品的最佳效能，用戶應最少每週清洗抽油煙機一次。
- 清洗或拆裝金屬底部時，請務必先戴上安全手套，以免割傷。
- 警告：如用戶不依照本說明書指示進行維修或清潔保養 (特別是風扇及易沾油污部份)，有可能會導致火警。

Important

- To ensure the most optimum efficiency, the range hood must be cleaned at least once a week.
- Make sure to wear safety gloves before cleaning or dismantling the metal parts of the range hood in order to reduce the risk of any injury caused by the sharp edges.
- Warning: There is a risk of fire if repair and cleaning of the range hood (especially the fan and other easily-soiled parts) are not carried out in accordance with the instructions.

1. 清潔、保養及維修前必須先拔掉電源插頭。
2. 清潔時，內外之表面可用軟布沾中性清潔劑擦拭，再沾清水揩抹，應避免刮花機體內外表面。
3. 集油杯積油一半或以上時，需要將油污倒掉以免溢出。先打開金屬底板，取出風輪下的集油杯，清洗及抹乾後重新裝上 (如圖D) 。

1. Power plug must be disconnected before cleaning and repair.
2. Use soft cloth with mild detergent to clean the surface of the hood from outside and inside each time after use and then clean with a cloth soaked with water. Avoid scraping the surface.
3. Clear oil from oil collectors when they are more than half full of grease in order to avoid spilling. Open metal panel and pull and slide the oil collector placed under the fan. Wash and wrap it dry. Then slide and push it back (Fig D).

圖D Fig D

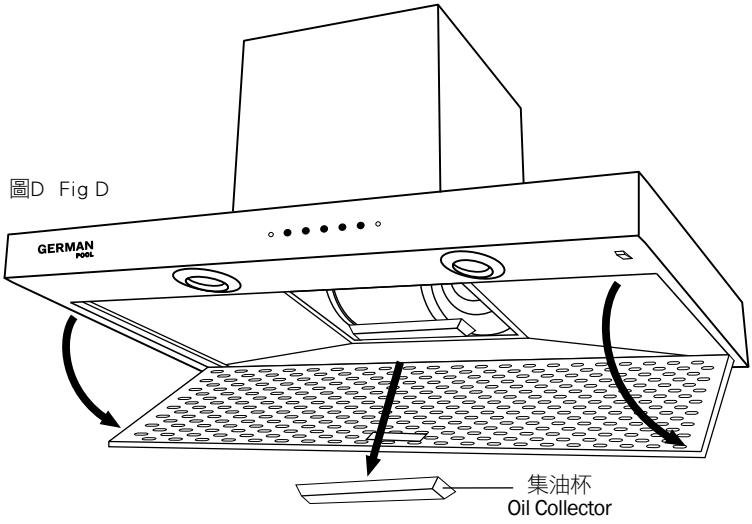

常見故障及處理 Troubleshooting

如遇以下一般性故障，請按以下指示處理，如仍處理不了或未發現故障原因時，請與本公司維修服務中心聯繫。

If you encounter the following common troubles, please solve according to the following instructions. If the problem cannot be solved or a cause cannot be found, please contact our customer services centre.

注意：為安全著想，再次特別提醒，請勿自行拆卸修理。

Note: For safety purpose, do not dismantle the product for repair by yourself.

故障現象 Phenomenon	原因分析 Possible Cause	處理方法 Solution
按下 LED 燈鍵， LED 燈不運作。 Press the LED light button but LED lighting is not working.	– 電源插頭未插好 – 照明燈壞 – 電源線脱落或接觸不良 – The plug is not inserted to the socket properly – The light is out of order – Power cord comes off and is not attached properly	– 檢查插頭，應可靠地插入插座 – 更換照明燈 – 維修或更換 – Check whether the plug is properly plugged to the socket – Change the light bulb – Repair or replace
電機不運作。 The machine is not working.	– 葉輪被卡阻 – 電容器接觸不良或損壞 – 電機損壞 – Impeller gets stuck – Capacitor is not well connected or damaged – Motor is damaged	– 排除葉輪卡阻故障 – 維修或更換 – 維修或更換 – Clear impeller from obstructions – Repair or replace – Repair or replace
機身震動。 The hood vibrates.	– 機身懸掛不牢固 – 電機安裝不牢固 – 葉輪受損平衡被破壞 – Not firmly mounted – Not installed securely – Impeller is damaged and becomes imbalanced	– 緊固機身 – 緊固機身 – 維修或更換 – Secure the hood – Secure the hood – Repair or replace
選擇不同風速，但風機不運作。 Fan works at one speed but not at another.	– 控制開關失靈 – 轉換電路未接通 – Power switch malfunction – Circuit not connected well	– 維修或更換 – 維修或更換 – Repair or replace – Repair or replace
抽油煙效果不好。 Does not exhaust effectively.	– 機身安裝過高 – The hood is mounted at a rather high position	– 降低安裝高度 – Lower the installation position

技術規格 Technical Specifications

型號 Model	RHM-6328S	RHM-7328S
電壓 Voltage / 頻率 Frequency	220-240 V ~ 50 Hz	220-240 V ~ 50 Hz
功率 Power	380 ~ 420 W	380 ~ 420 W
照明燈 Lighting	6 W (3 W LED x 2)	6 W (3 W LED x 2)
摩打轉速 Motor Speed	Max. 2,800 RPM	Max. 2,800 RPM
排風量 Exhaust Flow	Max. 1,000 m^3/hr	Max. 1,000 m^3/hr
排風口直徑 Exhaust Outlet Diameter	Ø 102 mm / 4"; Ø 125 mm / 5"; Ø 152 mm / 6"	Ø 102 mm / 4"; Ø 125 mm / 5"; Ø 152 mm / 6"
機身尺寸 Product Dimensions	(H) 305 mm (W) 600 mm (D) 356 mm	(H) 305 mm (W) 700 mm (D) 356 mm
淨重 Net Weight	12.5 kg	13 kg

型號 Model	RHM-8328S	RHM-9328S
電壓 Voltage / 頻率 Frequency	220-240 V ~ 50 Hz	220-240 V ~ 50 Hz
功率 Power	380 ~ 420 W	380 ~ 420 W
照明燈 Lighting	6 W (3 W LED x 2)	6 W (3 W LED x 2)
摩打轉速 Motor Speed	Max. 2,800 RPM	Max. 2,800 RPM
排風量 Exhaust Flow	Max. 1,000 m^3/hr	Max. 1,000 m^3/hr
排風口直徑 Exhaust Outlet Diameter	Ø 102 mm / 4"; Ø 125 mm / 5"; Ø 152 mm / 6"	Ø 102 mm / 4"; Ø 125 mm / 5"; Ø 152 mm / 6"
機身尺寸 Product Dimensions	(H) 305 mm (W) 800 mm (D) 356 mm	(H) 305 mm (W) 900 mm (D) 356 mm
淨重 Net Weight	13.5 kg	14.2 kg

技術規格 Technical Specifications

型號 Model	RHM-6428S	RHM-7428S
電壓 Voltage / 頻率 Frequency	220-240 V ~ 50 Hz	220-240 V ~ 50 Hz
功率 Power	380 ~ 420 W	380 ~ 420 W
照明燈 Lighting	6 W (3 W LED x 2)	6 W (3 W LED x 2)
摩打轉速 Motor Speed	Max. 2,800 RPM	Max. 2,800 RPM
排風量 Exhaust Flow	Max. 1,000 m^3/hr	Max. 1,000 m^3/hr
排風口直徑 Exhaust Outlet Diameter	Ø 102 mm / 4"; Ø 125 mm / 5"; Ø 152 mm / 6"	Ø 102 mm / 4"; Ø 125 mm / 5"; Ø 152 mm / 6"
機身尺寸 Product Dimensions	(H) 305 mm (W) 600 mm (D) 457 mm	(H) 305 mm (W) 700 mm (D) 457 mm
淨重 Net Weight	13.4 kg	14.2 kg

型號 Model	RHM-8428S	RHM-9428S
電壓 Voltage / 頻率 Frequency	220-240 V ~ 50 Hz	220-240 V ~ 50 Hz
功率 Power	380 ~ 420 W	380 ~ 420 W
照明燈 Lighting	6 W (3 W LED x 2)	6 W (3 W LED x 2)
摩打轉速 Motor Speed	Max. 2,800 RPM	Max. 2,800 RPM
排風量 Exhaust Flow	Max. 1,000 m^3/hr	Max. 1,000 m^3/hr
排風口直徑 Exhaust Outlet Diameter	Ø 102 mm / 4"; Ø 125 mm / 5"; Ø 152 mm / 6"	Ø 102 mm / 4"; Ø 125 mm / 5"; Ø 152 mm / 6"
機身尺寸 Product Dimensions	(H) 305 mm (W) 800 mm (D) 457 mm	(H) 305 mm (W) 900 mm (D) 457 mm
淨重 Net Weight	15 kg	15.9 kg

產品規格及設計如有變更，恕不另行通知。
Specifications are subject to change without prior notice.

中英文版本如有出入，一概以中文版為準。
If there is any inconsistency or ambiguity between the English version and the Chinese version, the Chinese version shall prevail.

本產品使用說明書以 www.germanpool.com 網上版為最新版本。
Refer to www.germanpool.com for the most up-to-date version of the User Manual.

保用條款

此保用提供德國寶產品之機件在正常使用下壹年保用(自購買日起計算)。

* 貴戶須在購機十天內，以下列其中一種方式向本公司登記資料，保用手續方正式生效:

1) 填妥本公司網頁內之保用登記表格
www.germanpool.com/warranty

2) 填妥保用登記卡，郵寄至本公司。

1. 未能出示購買發票正本者，將不獲免費維修服務。

2. 用戶應依照說明書的指示操作。本保用並不包括:
- 安裝、上門檢驗、更換零件之人工或運輸費用等;
- 因天然與人為意外造成的損壞（包括運輸及其它);
- 產品外殼之表面、燈泡、任何塑膠附件及輔助裝置如集油杯等;
- 電源接合不當、不依說明書而錯誤或疏忽使用本機所引致之損壞。

3. 於下列情況下，用戶之保用資格將被取消:
- 購買發票有任何非認可之刪改;
- 產品被用作商業或工業用途;
- 產品經非認可之技術人員改裝或加裝任何配件;
- 機身編號被擅自塗改、破壞或刪除。

4. 總代理有權選擇維修或更換配件或其損壞部份。

5. 產品一經被轉讓，其保用即被視作無效。

* 此保用只在香港、九龍、新界區有效，東涌、愉景灣及離島，須額外收取交通費用。

Warranty Terms & Conditions

Under normal operations, the product will gurantee a 1-year full warranty provided by German Pool (effective from the date of purchase).

* This warranty is not valid until customer registration information is received by our Service Centre within 10 days of purchase via one of the following means:

1) Visit our website and register online:
www.germanpool.com/warranty

2) Complete all the fields on the attached Warranty Card and mail it back to our Customer Service Centre.

另請填妥以下表格並與正本發票一併保存，以便維修時核對資料。用戶提供之所有資料必須正確無誤，否則免費保用將會無效。
Please fill out the form below. This information and the original purchase invoice will be required for any repairs. Warranty will be invalidated if information provided is found to be inaccurate.

型號 Model No. : ☐ **RHM-6328S** ☐ **RHM-7328S** ☐ **RHM-8328S** ☐ **RHM-9328S**
☐ **RHM-6428S** ☐ **RHM-7428S** ☐ **RHM-8428S** ☐ **RHM-9428S**

機身號碼 Serial No. : _____ 發票號碼 Invoice No. : _____

購買商號 Purchased From : _____ 購買日期 Purchase Date : _____

1. Customer who fails to present original purchase invoice will be disqualified for free warranty.

2. Customer should always follow the operating instructions. This warranty does not apply to:
- labour costs for installation, on-site check-up, replacement of parts and other transportation costs;
- damages caused by accidents of any kind (including transport and others);
- casing of hood body, light bulbs, plastic parts and accessories such as oil collecting cups;
- operating failures resulted by incorrect voltage, improper operations and unauthorized installations or repairs.

3. This warranty is invalid if:
- purchase invoice is modified by unauthorized party;
- product is used for any commercial or industrial applications;
- product is repaired or modified by unauthorized personnel, or unauthorized parts are installed;
- serial number is modified, damaged or removed from the product.

4. German Pool will, in its discretion, repair or replace any defective part.

5. This warranty will be void if there is any transfer of ownership from the original purchaser.

* Service area includes Hong Kong Island, Kowloon and New Territories only. Repairs in Tung Chung, Discovery Bay or other areas are subject to an extra service charge.

客戶服務及維修中心

香港

九龍灣啟興道1-3號
九龍貨倉10樓
電話：+852 2333 6249
傳真：+852 2356 9798
電郵：repairs@germanpool.com

澳門

澳門俾利喇街145號
寶豐工業大廈3樓
電話：+853 2875 2699
傳真：+853 2875 2661

Customer Service & Repair Centre

Hong Kong

10/F, Kowloon Godown
1-3 Kai Hing Road, Kowloon Bay,
Kowloon, Hong Kong
Tel : +852 2333 6249
Fax : +852 2356 9798
Email : repairs@germanpool.com

Macau

3/F, Edificio Industrial Pou Fung,
145 Rua de Francisco Xavier Pereira,
Macau
Tel : +853 2875 2699
Fax : +853 2875 2661

此保用只適用於香港及澳門 | This warranty is valid only in Hong Kong and Macau

GERMAN POOL 德國寶

德國寶（香港）有限公司 German Pool (Hong Kong) Limited

香港
Hong Kong
香港九龍土瓜灣馬頭角道116號
新寶工商中心2期113號室
Room 113, Newport Centre Phase II, 116 Ma Tau Kok Road, Tokwawan, Kowloon, Hong Kong.
電話 Tel: +852 2773 2888
傳真 Fax: +852 2765 8215

中國
China
廣東省佛山市順德區
大良五沙工業區新翔路8號
8th, Xinxiang Road, Wusha Industrial Park, Daliang, Shunde, Foshan, Guangdong, China
電話 Tel: +86 757 2980 8308
傳真 Fax: +86 757 2980 8318

澳門
Macau
澳門俾利喇街145號
寶豐工業大廈3樓
3/F, Edificio Industrial Pou Fung, 145 Rua de Francisco Xavier Pereira, Macau
電話 Tel: +853 2875 2699
傳真 Fax: +853 2875 2661

香港名牌十年成就獎 HONG KONG TOP BRAND TEN YEAR ACHIEVEMENT AWARD
香港《S MARK》安全認證
中國組權/家電行業十大影響力品牌
CEO非凡品牌大賞
香港優質商號
香港工商業獎
2007 最具潛質創建品牌企業獎
香港中小企業最佳拍檔大獎
香港消費者推崇品牌
香港《Q導》優質服務證書

© 版權所有。未獲德國寶授權，不得翻印、複製或使用本說明書作任何商業用途，違者必究。
© All rights reserved. Copying, reproducing or using the contents of this manual is not allowed without prior authorization from German Pool, violators will be prosecuted.

www.germanpool.com