307262 01

EN Time switch

DV1K
108272

DV2K
108273

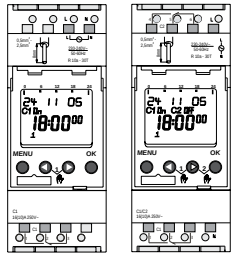

1. Basic safety information 3

2. Proper use 3

Disposal 3

3. Installation and connection 4

Mounting the time switch 4

Connecting the cable 6

Disconnecting the cable 6

4. Device description 7

Display & buttons 7

Operating instructions 8

Overview of navigation menu 9

Initial operation 10
5. Settings and functions 11
Set switching time 11
Change switching times 12
Delete switching program 13
Activating PIN code 14
Setting manual or permanent switching 15
Hour counter 15
Using the memory card 16
Resetting the time switch 17
6. Technical data 18
7. Contact 19

1. Basic safety information



⚠ WARNING

Danger of death through electric shock or fire!

➢ Installation should only be carried out by a qualified electrician!

- The device is designed for installation on DIN top hat rails (in accordance with EN 60715)
- The device corresponds to type 1 STU in accordance with IEC/EN 60730-2-7
- Power reserve (10 years) is reduced if memory card is inserted (using battery power)

⚠ Memory card: Avoid mechanical overload and contamination during storage/transportation

2. Proper use

- The time switch is used for lighting, ventilation and flushing applications etc.
- Only for use in closed, dry rooms

⚠ Do not use on safety devices, e.g. escape route doors, fire safety equipment etc.

Disposal

➤ Dispose of device in environmentally sound manner

3. Installation and connection

Mounting the time switch



⚠ WARNING

Danger of death through electric shock or fire!

- Installation should only be carried out by a qualified electrician!

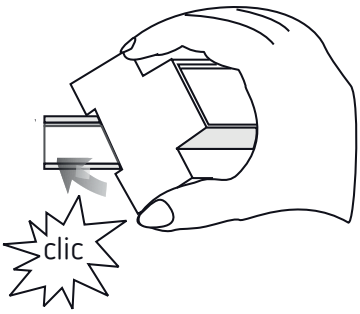

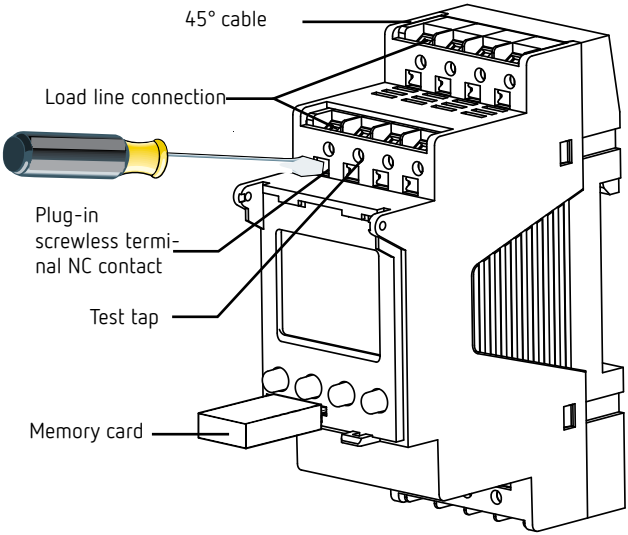

- Mount on DIN top hat rails (as defined in EN 60715)
- Switched voltage-free
- Ensure device cannot be switched on
- Check absence of voltage
- Earth and bypass
- Cover or shield any adjacent live components

Connecting the cable

Wiring diagrams DV1K / DV2 K

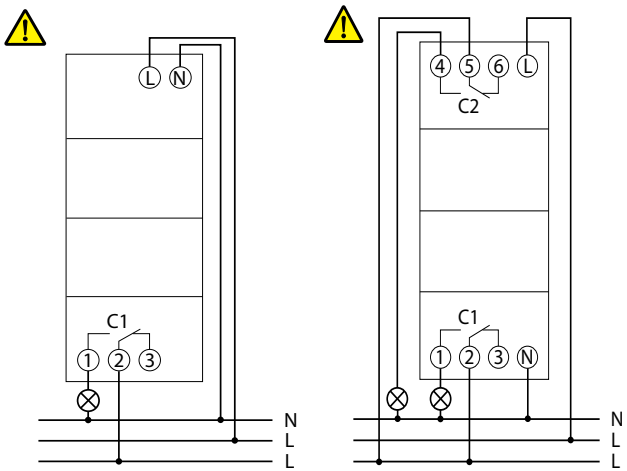

- Strip cable to 8 mm (max. 9)
- Insert cable in the open DuoFix® plug-in terminal at 45°

ⓘ 2 cables per terminal position possible

- To open the DuoFix® plug-in terminal, press screwdriver downwards

Disconnecting the cable

- Use the screwdriver to push the load line connection opener downwards

4. Device description

Display & buttons

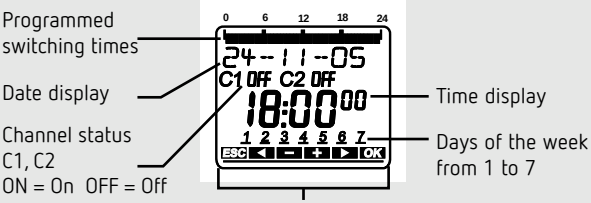

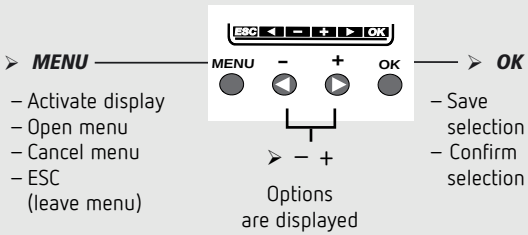

Operating instructions

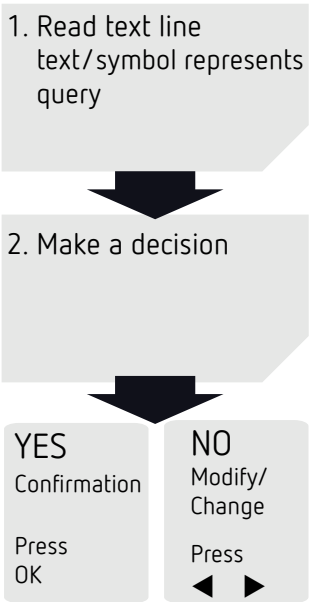

Overview of navigation menu

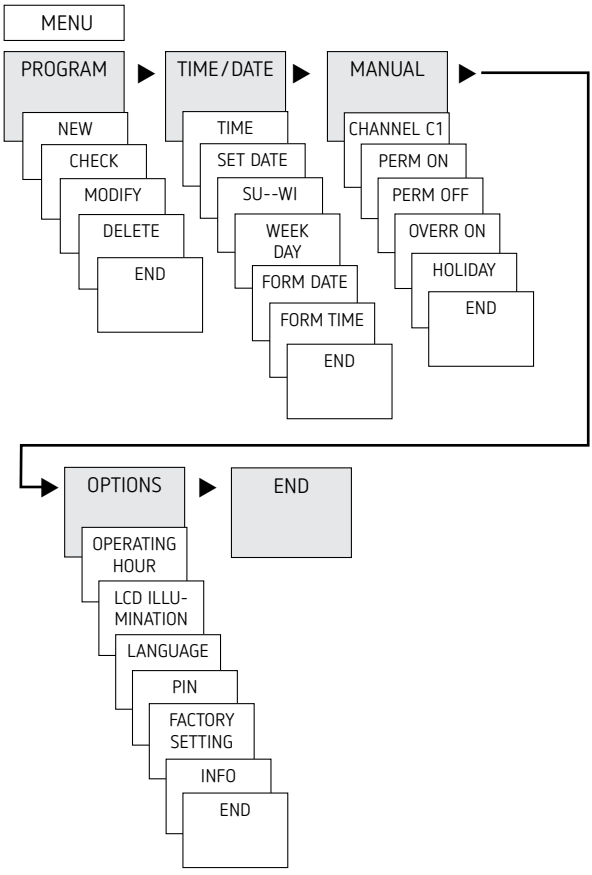

Initial operation

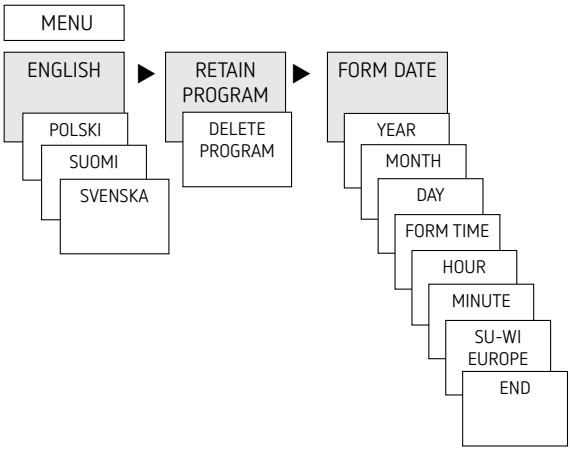

- Set language, country, town/city, date, time as well as summer/winter time (SU-WI)
- Press any button and display follows on screen (see figure)

5. Settings and functions

Set switching time

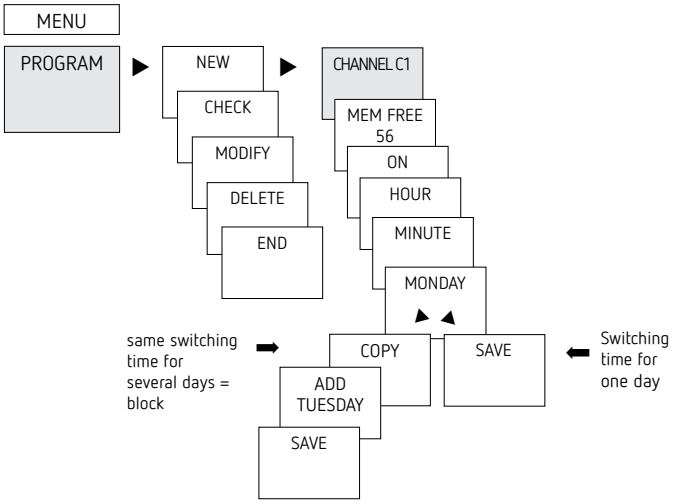

ⓘ A switching time always consists of a start time and an end time

ⓘ There are 56 memory cells available

Example: Switch on sports hall lighting from Mon – Fri, 7:30 to 12:00 hrs

- Press MENU
- Select PROGRAM and press OK to confirm
- Select NEW and press OK to confirm
- Select CHANNEL C1 or C2, confirm with OK
- Select ON (for turn-on times), confirm with OK
- Set required turn-on time (Mo–Fr, 7:30), confirm with OK
- Select COPY, confirm with OK
- ADD TUESDAY is displayed, confirm by pressing OK and also confirm the days We, Th, Fr by pressing OK
- Continue with ▶ until SAVE is displayed
- Confirm by pressing OK

Repeat all steps for the turn-off time, however instead of selecting ON with ▶ select OFF and enter 12:00 for hour and minute.

Change switching times

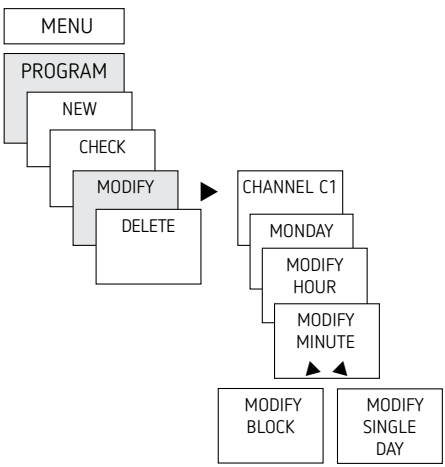

ⓘ You can either change or delete a block, i.e. a switching time copied for several days (e.g. Mon-Fri) or a single switching time

Change individual switching times

- ➤ Press MENU
- ➤ Select PROGRAM and press OK to confirm
- ➤ Select MODIFY, confirm by pressing OK
- ➤ Select CHANNEL C1 or C2, confirm with OK
- ➤ Select day, confirm with OK
- ➤ MODIFY HOUR, use the + or − buttons to change hour and minute and confirm with OK.
- ➤ To change several switching times, select MODIFY BLOCK, confirm with OK

Delete switching program

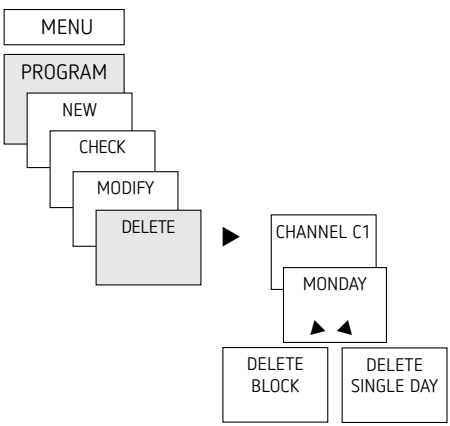

ⓘ You can either delete a block, i.e. a switching time copied for several days (e.g. Mon-Fri) or a single switching time

➤ Press MENU
➤ Select PROGRAM and confirm with OK
➤ Select DELETE, confirm with OK
➤ MONDAY is displayed, confirm with OK
➤ Select DELETE BLOCK, confirm with OK
➤ With ▶ DELETE MONDAY etc. individual days can also be cleared

Activating PIN code

The PIN code is set in OPTIONS via the menu.

ⓘ If you have forgotten your PIN, call the Garo Hotline.

ⓘ Have the serial number ready.

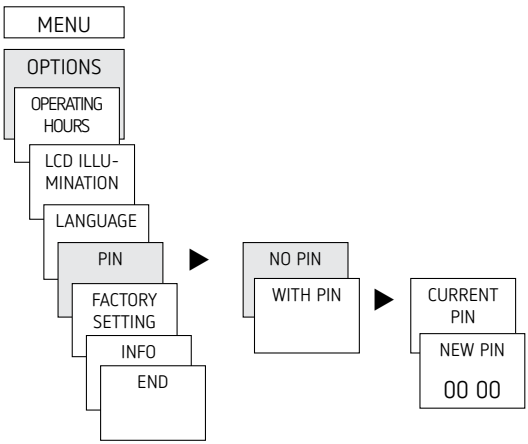

Setting manual or permanent switching

Manual or permanent switching can be set via the menu in MANUAL or (in the automatic screen) by button combination (see picture).

- Manual control:
  Reversing the channel status to the next automatic or programmed switching.
- Permanent switching:
  As long as a permanent switching (on or off) is activated, the programmed switching times are ineffective

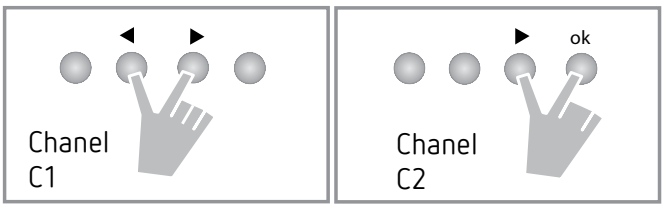

Activating manual control

➤ Briefly press both buttons simultaneously

Activating permanent switching

➤ Press both buttons simultaneously for 2 seconds

Cancelling manual/permanent switching

➤ Press both buttons simultaneously

Hour counter

The operating hours of the channel (relay) are displayed and deleted in the OPTIONS menu. If the number of operating

hours exceeds the value set in the Service menu, SERVICE will appear in the display.
Example: Replace a lamp after after 5,000 h.

➤ Delete operating hours or set a higher value in Service (e.g. to 10,000 h)

Using the memory card

All functions can also be set on the PC using the OBELISK software and transferred to the device via the memory card.

➤ Insert memory card in the time switch
➤ Read in/out saved switching times and device setups in the time switch or start Obelisk program
➤ Remove memory card after copying etc.

⚠ Avoid mechanical overload and contamination during storage/transport

ⓘ PC software OBELISK available at www.garo.se

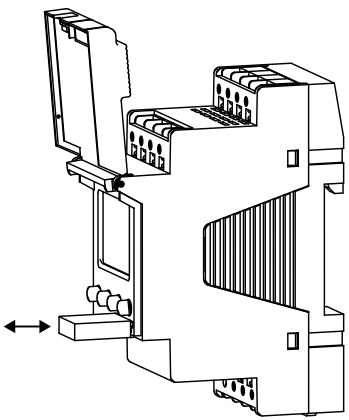

Copying OBELISK → TIME

This copies the switching program and optionally all time switch settings (e.g. external input, time format etc.) from the memory card in the time switch.

Copying TIME → OBELISK

This copies all switch programmes and settings from the time switch to the memory card.

Starting OBELISK program

Takes on the switching times that are programmed on the memory card.
As soon as the memory card is removed, the switching times of the time switch are re-activated.

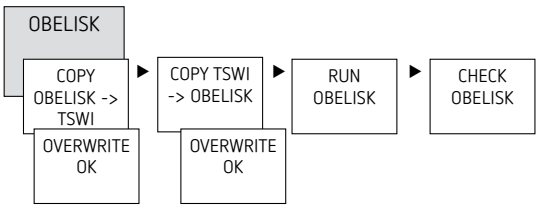

Resetting the time switch

➤ Press the 4 buttons simultaneously
→ You can choose between KEEP PROGRAM and DELETE PROGRAM

6. Technical data

Operating voltage:	230–240 V AC +10 % / –15 %
Frequency:	50–60 Hz
Power consumption DV1K / DV2K:	max. 0,84/1,13 W
Max switching capacity:	16 A (at 250 V, cos φ = 1)
switching capacity:	10 A (at 250 V, cos φ = 0,6)
Min. switching capacity:	10 mA/230 V AC 100 mA/ 24 V AC/DC
Switching output:	switching of choice of phase is permitted
GTR DV1K:	suitable for switching SELV (Safe Extra-Low Voltage)
Shortest switching time:	1 min
Protection rating:	IP 20 in accordance with EN 60529
Protection class:	II in accordance with EN 60730-1 subject to designated installation
Operating temperature:	–30 °C ... +55 °C
Power reserve:	10 years at +20 °C
Time accuracy (typical):	± 0,25 s/day (25 °C)
Rated impulse withstand voltage:	4 kV
Pollution degree:	2
Contact:	wo way switch
Glow lamp load:	2600 W
Halogen lamp load:	2600 W
Fluorescent lamp load: uncorrected: Series corrected: parallel-corrected:	 2300 VA 730 VA (80 µF)
Compact fluorescent tubes (EVG):	170 W
LED lamps (< 2 W):	30 W
LED lamps (> 2 W < 8 W):	100 W
LED lamps (> 8 W):	120 W

7. Contact

Garo AB
Södergatan 26
335 33 GNOSJÖ
SWEDEN
www.garo.se

+46 370 332 800
info@garo.se

Garo Electric Irl Ltd

Unit 19/307
Northwest Business Park
Ballycoolin, Dublin 15
www.garo.ie

+353 1 866 5360
sales@garo.ie