DW-0309-450

180912

eurotech

Dishwasher

Instruction Manual

ED-DW14PWH
ED-DW14PSS
☑ 14 place settings

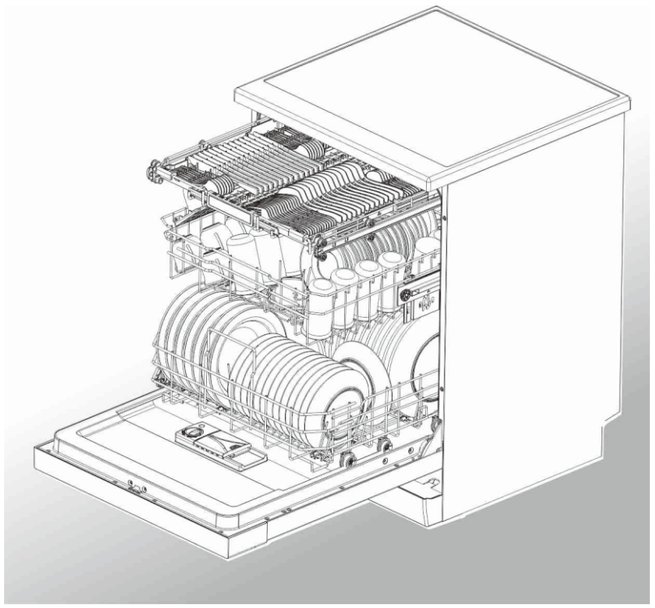

尺寸:297X210mm

技术要求:

1. 图示所标注的尺寸均为外尺寸;

2.必须由格兰仕技术部封样后才能大货生产。

标记	处数	更改文件号	签字	日期
设计			标准化	
校对				
审核				
批准				

欧宝说明书

型号：W60C3A401M-AA1

图样标记	数量	重量	比例
S A B	1		1:1

共 1 页　　第 1 张

WO31S181005

材料□ 80克双胶纸

广东格兰仕微波生活电器制造有限公司

借(通)用件登记

旧底图总号

底图总号

出图审查

日期



Read this Manual

Dear Customer,
Please read this User Information carefully and keep it to refer to at a later date.
Pass it on to any subsequent owner of the appliance.

This manual contains sections of Safety Instructions, Operating Instructions, Installation Instructions and Troubleshooting Tips, etc.

Carefully read it before using the dishwasher will help you to use and maintain the dishwasher properly.



Before Calling for Service

To review the section on Troubleshooting Tips will help you to solve some common problems by yourself and not need to ask for the help of professional technicians.



NOTE:

The manufacturer, following a policy of constant development and updating of the product, may make modifications without giving prior notice.

1) Safety Information 1-2

2) Disposal 2

3) Operation Instruction.....3-4
Control Panel 3
Dishwasher Features 4

4) Prior using for the first time 4-8
Fill the Rinse Aid Dispenser.....4-5
Function of Detergent 5-8

5) Loading the Dishwasher Baskets..8-11

6) Starting a washing programme 12-13
Wash Cycle Table 12
Turning on the Appliance.....12
Change the Programme.....13
Forget to Add Dish 13

7) Maintenance and cleaning.....14-16

8) Installation 16-19
Positioning and leveling 16-17
Connecting the water and electricity supplies 17-19

9) Troubleshooting Tips.....19-21
Error codes 19
Before calling for service 19-21
Technical information 21

1. Safety Information

⚠ WARNING !
When using your dishwasher, follow the basic precautions including the following:

⚠ WARNING! HYDROGEN GAS IS EXPLOSIVE

Under certain conditions, Hydrogen gas may be produced in a hot-water system that has not been used for two weeks or more. HYDROGEN GAS IS EXPLOSIVE. If the hot-water system has not been used for such a period, before using the dishwasher turn on all hot-water faucets and let the water flow from each for several minutes. This will release some accumulated hydrogen gas. As the gas is flammable, do not smoke or use an open flame this time.

⚠ WARNING! PROPER USE

- Do not abuse, sit on, or stand on the door or dish basket of the dishwasher.
- Do not touch the heating element during or immediately after using.
- Do not operate your dishwasher unless all enclosure panels are properly in place. Open the door very carefully if the dishwasher is operating. There is a risk of water squirting out.
- Do not place any heavy objects or stand on the door when it is open. The appliance could tip forward.
- When loading items to be washed:
  - Locate sharp items so that they are not likely to damage the door seal;
  - Load sharp knives with the handles up to reduce the risk of cut-type injuries;
  - Warning: Knives and other utensils with sharp points must be loaded in the basket with their points down or placed in a horizontal position.
- When using your dishwasher, you should prevent plastic items from contacting with heating element.
- Check that the detergent receptacle is empty after completion of the wash cycle.
- Do not wash plastic items unless they are marked dishwasher safe or the equivalent. For plastic items not so marked, check the manufacturer's recommendations.
- Use only detergent and rinse additives designed for an automatic dishwasher. Never use soap, laundry detergent, or hand washing detergent in your dishwasher.
- Other means for disconnection from the supply must be incorporated in the fixed wiring with at least 3mm contact separation in all poles.
- Keep children away from detergent and rinse aid, keep children away from the open door of the dishwasher , there could still be some detergent left inside.

■These instructions shall also be got from the manufacturer or responsible Vendor.

■To protect against the risk of electrical shock, do not immerse the unit, cord or plug in water or other liquid.

■This appliance can be used by children aged from 8 years and above and persons with reduced physical, sensory or mental capabilities or lack of experience and knowledge if they have been given supervision or instruction concerning use of the appliance in a safe way and understand the hazards involved. Children shall not play with the appliance. Cleaning and user maintenance shall not be made by children without supervision.

- Dishwasher detergents are strongly alkaline. They can be extremely dangerous if swallowed. Avoid contact with skin and eyes, and keep children away from the dishwasher when the door is open.
- The door should not be left in the open position since this could present a tripping hazard.
- If the supply cord is damaged, it must be replaced by the manufacturer or its service agent or a similarly qualified person in order to avoid a hazard.
- Please dispose of packing materials properly.
- During installation, the power supply must not be excessively or dangerously bent or flattened.
- Do not tamper with controls.
- The appliance is to be connected to the water mains using new hose sets, and the old hose-sets should not be reused.
- Make sure that the carpet must not obstruct the openings at the bottom base.
- Use the dishwasher only for its intended function.
- The dishwasher is intended for indoor use only.
- The dishwasher is not designed for commercial use. It is intended for use in domestic households and in similar working and residential environments.

READ AND FOLLOW THIS SAFETY INFORMATION CAREFULLY
SAVE THESE INSTRUCTIONS

2. Disposal



Dispose of the dishwasher packaging material correctly.
All packaging materials can be recycled.
Plastic parts are marked with the standard international abbreviations:
(e.g. PS for polystyrene, padding material)

This appliance is identified according to the European guideline 2002/96/EC on waste electrical and electronic equipment -WEEE. The guideline specifies the framework for an EU-wide valid return and re-use of old appliances.

WARNING!

Packaging material could be dangerous for children!
For disposing of package and the appliance please go to a recycling centre. Cut off the power supply cable and make the door closing device unusable.
Cardboard packaging is manufactured from recycled paper and should be disposed in the waste paper collection for recycling.
By ensuring this product is disposed of correctly, you will help prevent potential negative consequences for the environment and human health, which could otherwise be caused by inappropriate waste handling of this product.
For more detailed information about recycling of this product, please contact your local city office and your household waste disposal service

IMPORTANT!

To get the best performance from your dishwasher, read all operating instructions before using it for the first time.

3. Operation Instruction

Control Panel

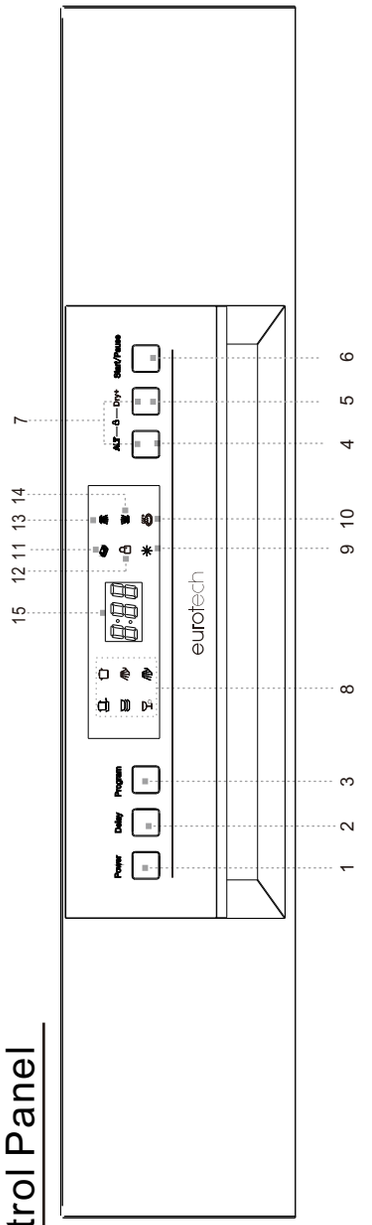

1、Power switch: To turn on/off the power supply.
2、Delay button: The START DELAY will allow you to delay the start time of any cycle automatically up to 24hours.
3、Program key-press: Press the key to scroll through the wash cycles. The corresponding programme light will be ON to indicate which WASH CYCLE has been selected.
4、Function alternative button: Press this button you can choose the additional function "3 IN 1",washing of upper layer or washing of lower layer and the corresponding light flashes.
5、"Dry+" button:Press this button you can choose or cancel the "Dry+" function.
6、Start \pause button: The appliance will start or pause the expected washing cycle.
7、Child lock button: Press the two buttons for 3 seconds, the appliance could be locked and any button can not be used.
8、Program indicator light: When you select a washing programme , the corresponding light will display.
9、Rinse aid refill indicator: The indicator lights up when dispenser needs to be refilled.
10、Dry+ indicator: An increased temperature during the final rinse stage will improve the drying process; The indicator will be available when the Dry+ button is selected.
11、3 in 1 indicator: The indicator lights up when the additional function be selected.
12、Child lock indicator: The "Child Lock" will be available when you press the Child lock buttons for 3 seconds, and the "Child lock"indicator lights up after flashing 6 times.
13、Washing light of upper layer: To come on when the upper spray arm is washing.
14、Washing light of lower layer: To come on when the lower spray arm is washing.
15、Digital display: To display the running time remain, malfunction codes and delay time.

Dishwasher Features

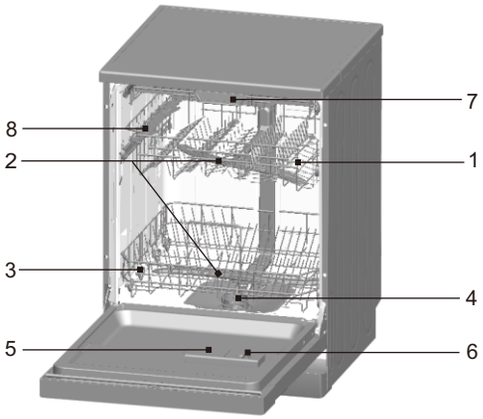

Front View

1 Upper Basket
2 Spray Arms
3 Lower Basket
4 Filters
5 Detergent Dispenser
6 Rinse Aid Dispenser
7 Cutlery Tray
8 Cup Holder

4. Prior Using for the First Time

Before using your dishwasher for the first time:
A. Fill the rinse aid dispenser
B. Function of detergent

A. Fill the Rinse Aid Dispenser

Function of Rinse Aid

Rinse aid is automatically added during the last rinse, ensuring thorough rinsing, spot and streak free drying.

Attention!

Only use branded rinse aid for dishwasher. Never fill the rinse aid dispenser with any other substances (e.g. dishwasher cleaning agent, liquid detergent). This would damage the appliance.

When to Refill the Rinse Aid Dispenser

You can judge the amount of rinse-aid by the colour of the optical level indicator "D" located next to the cap. When the rinse-aid container is full, the whole indicator will be dark .As the rinse aid diminishes, the size of the dark dot decreases. You should never let the rinse aid get below 1 / 4 full.

As the rinse aid diminishes, the size of the black dot on the rinse aid level indicator changes, as illustrated below.

- ● Full
- ◉ 3 / 4 full
- ⦿ 1 / 2 full
- ⊙ 1 / 4 full - Should refill to eliminate spotting
- ○ Empty

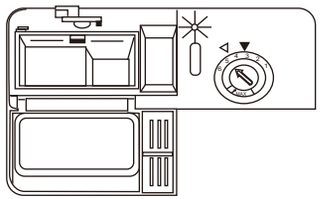

RINSE AID DISPENSER



1 To open the dispenser, turn the cap to the "open" (left) arrow and lift it out.
2 Pour the rinse aid into the dispenser, be careful not to overfill.
3 Replace the cap by inserting it aligned with "open" arrow and turning it to the "closed" (right) arrow.

The rinse aid is released during the final rinse to prevent water from forming droplets on your dishes that can leave spots and streaks. It also improves drying by allowing water to sheet off the dishes. Your dishwashers are designed to use liquid rinse aids. The rinse aid dispenser is located inside the door next to the detergent dispenser.
To fill the dispenser, open the cap and pour the rinse aid into the dispenser until the level indicator turns completely black. The volume of the rinse aid container is about 140ml.
Be careful not to overfill the dispenser, because this could cause over sudsing. Wipe away any spills with a damp cloth. Don't forget to replace the cap before you close dishwasher door.

Attention!

Clean up any rinse aid split during filling with an absorbent cloth to avoid excess foaming during the next wash.

Adjusting Rinse Aid Dispenser

The rinse aid dispenser has four or six settings. Always start with the dispenser set on "4" . If spots and poor drying are problems, increase the amount of rinse aid dispensed by removing the dispenser lid and rotating the dial to "5". If the dishes still are not drying properly or are spotted, adjust the dial to the next higher number until your dishes are spot-free.The dose is factory set in position 5.

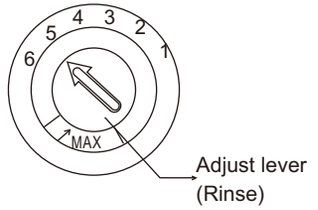

NOTE: Increase the dose if there are drops of water or lime spots on the dishes after washing. Reduce it if there are sticky whitish streaks on the dishes or a bluish film on glassware or knife blades.

B. Function of Detergent

Detergents with its chemical ingredients are necessary to remove dirt, crush dirt and transport it out of the dishwasher. Most of commercial quality detergents are suitable for this purpose.

Concentrated Detergent

Based on their chemical composition, dishwasher can be split in two basic types:

■conventional, alkaline detergents with caustic components

■low alkaline concentrated detergents with natural enzymes

The use of "normal" washing programme in conjunction with concentrated detergents reduces pollution and is good for your dishes; these washing programmes are specially matched to the dirt-dissolving properties of the enzymes of the concentrated detergent. For this reason"normal" washing programme in which concentrated detergents are used can achieve the same results that can otherwise only be achieved using"intensive" programme.

Detergent Tablets

Detergent tablets of different brands dissolve at different speeds. For this reason some detergent cannot dissolve and develop their full cleaning power during short programmes. Therefore please use long programmes when using detergent tablets, to ensure the complete removal of detergent residuals.

Detergent Dispenser

The dispenser must be refilled before the start of each washing cycle following the instructions provided in the Wash Cycle Table. Your dishwashers use less detergent and rinse aid than conventional dishwashers. Generally, only one tablespoon of detergent is needed fora normal wash load. Also, more heavily soiled items need more detergent. Always add the detergent just before starting dishwasher, otherwise it could get damp and will not dissolve properly.

Amount of Detergent to Use

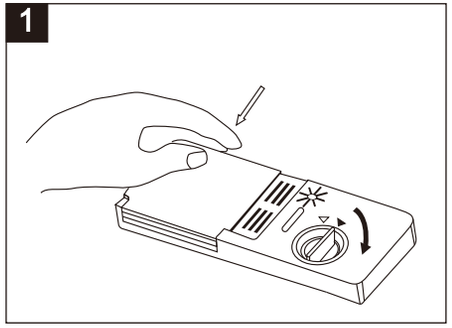

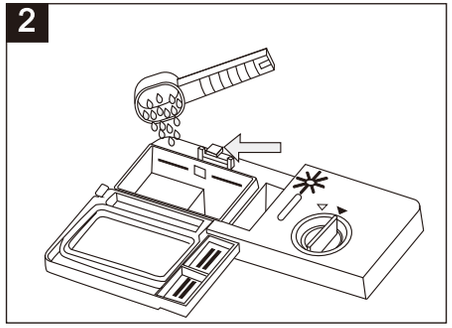

NOTE:

1 If the lid is closed: press release button. The lid springs open.

2 Always add the detergent just before starting each wash cycle. Only use branded detergent aid for dishwasher.

⚠ WARNING!

Dishwasher detergent is corrosive! Take care to keep it out of reach of children

Use only detergent specifically made for use in dishwashers. Keep your detergent fresh and dry. Don't put powder detergent into the dispenser until you're ready to wash dishes.

Fill in the detergent

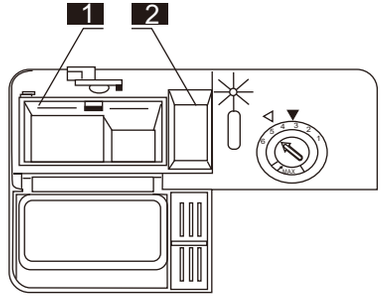

Fill the detergent dispenser with detergent.

The marking indicates the dosing levels , as illustrated on the right:

1 The place of main wash cycle detergent placed, "MIN"means approximately 20g of detergent.

2 The place of pre-wash cycle detergent placed , approximately 5g of detergent.

Please observe the manufacturer's dosing and storage recommendations as stated on the Detergent packaging.

Close the lid and press until it locks in place.

If the dishes are heavily soiled, place an additional detergent dose in the pre-wash detergent chamber. This detergent will take effect during the pre-wash phase.

NOTE:

You find information about the amount of detergent for the single programme on the last page.

Please be aware that according to the level soiling and the specific hardness of water, differences are possible.

Please observe the manufacturer's recommendations on the detergent packaging.

Use of "3 in 1" Detergent Tablets

General Advice

1. Before using these products you should first check that the water hard-ness in your supply is compatible with the use of these products as the detergent manufacturers instructions (on the product packaging).
2. These products should be strictly used according to the detergent manufacturers instructions.
3. If you encounter problems when using "3 in 1" products for the first time then please contact the detergent manufacturers care line (the telephone number is given on the product packaging).

These products are detergents with integrated and combined detergent/rinse aid functions.

Before using these products you should first check that the water hardness in your supply is compatible with the use of these products as per the detergent manufacturers (on the product packaging).

To select "3in1" function:

1. close the door and select the 3in1 washing cycle by pressing the "ALT" button until the "3in1" indicator blinks.
2. The 3in1 washing cycle will be available after pressing the start/pause button , and the"3in1" indicator lights.

To cancel "3in1" function:

To cancel 3in1 washing cycle by pressing the "ALT" button or follow the "Change the programme" instructions.

If you decide to switch to the use of a standard detergent system we advise that you:

1. Refill the rinse aid compartments.
2. Switch the water hardness setting to the highest possible position and run for three normal cycles without load.
3. Readjust the water hardness setting again according to the conditions for your region (For more information please refer to your instruction manual).

5. Loading the Dishwasher Baskets

For best performance of the dishwasher, follow these loading guidelines. Features and appearance of baskets and Cutlery tray may vary from your model.

Attention before or after Loading the Dishwasher Baskets

1. Scrape off any large amounts of leftover food. It is not necessary to rinse the dishes under running water. Place objects in the dishwasher in the following way:

A. Items such as cups, glasses, pots/pans, etc. are stood upside down.
B. Curve items, or those with recesses, should be at a slant so that water can run off.
C. They are stacked securely and can not tip over.
D. They do not prevent the spray arms from rotating while washing takes place.

2. Very small items should not be washed in the dishwasher as they could easily fall out of the Baskets.
3. The upper and lower baskets can not be pull out in the same time when the dishwasher is Loading, or it May lead to dumping.

Removing the Dishes

To prevent water dripping from the upper basket into the lower basket, we recommend that you empty the Lower basket first and then the upper basket.

Loading the Upper Basket

The upper basket is designed to hold more delicate and lighter dishware such as glasses, coffee and tea cup and saucers, as well as plates, small bowls and shallow pans (as long as they are not too dirty). Position the dishes and cookware so that they Do not get moved by the Spray of water.

Upper Basket

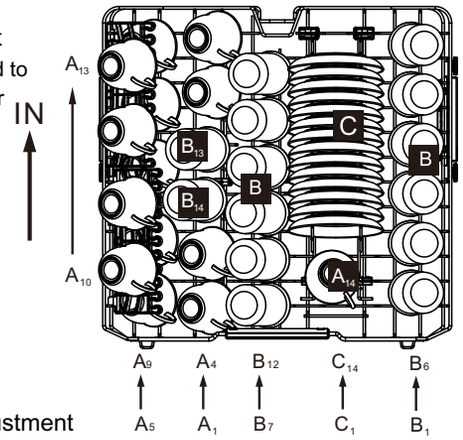

Upper basket	
Type	Item
A	Cup
B	Glass
C	Saucer

Upper Basket Height Adjustment

Basket height adjustment mechanism on the upper basket of your machine is designed to let you adjust the height of your upper basket upwards or downwards,without removing it from your machine when it is full,and create large spaces at the top or bottom area of your machine as needed.Basket of your machine is set to lower position in factory settings.

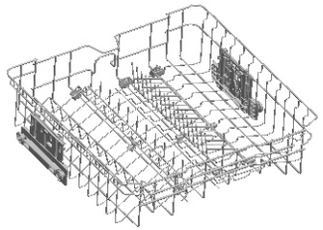

In order to raise your basket,hold it from both sides and pull it upwards.In order to lower it,hold it from both sides again,and leave it.
In loaded basket adjustment mechanism, make sure that both sides are in the same position (up or down).

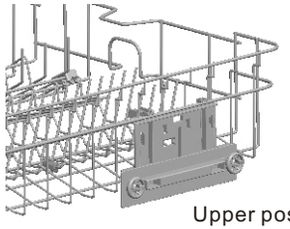
Upper position

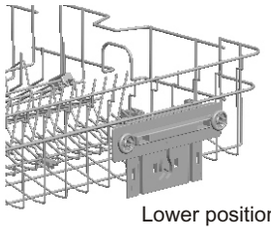
Lower position

Loading the Lower Basket

We recommend that you place large items which are most difficult to clean in to the lower basket: pots, pans, lids, serving dishes and bowls, as shown in the figure below.
It is preferable to place serving dishes and lids on the side of the baskets in order to avoid blocking the rotation of the top spray arm.
Pots, serving bowls, etc. must always be placed top down.
Deep pots should be slanted to allow water to flow out.
The bottom basket features fold down tine rows so that larger or more pots and pans can be loaded.

Lower Basket

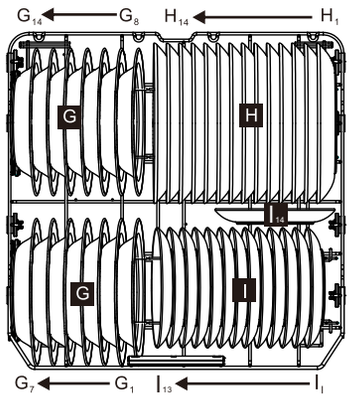

Lower basket	
Type	Item
G	Soup plate
H	Dinner plate
I	Dessert plate

* Upper and Lower basket Folding racks

Folding racks consisting of two parts in the lower basket of your machine are designed in order to let you place big items easier as pots, pans, etc. If requested, each part can be folded separately, or all of them can be folded and larger can be obtained. You can use folding racks by rasing then upwards, or by folding.



* For optional

Cutlery tray
Arrange the cutlery in the tray as shown. Cutlery should be placed to ensure that water runs off freely.

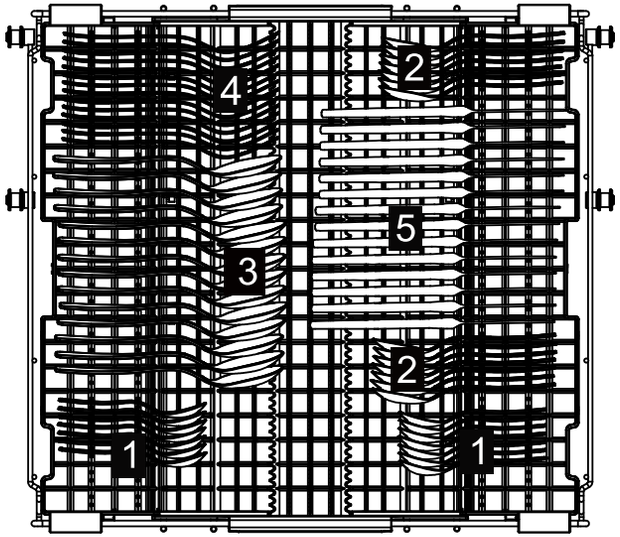

Cutlery tray	
Type	Item
1	Tea spoons
2	Dessert spoons
3	Soup spoons
4	Forks
5	Knives



For washing in the dishwasher the following cutlery/dishes

Are not suitable
Cutlery with wooden, horn china or mother-of-pearl handles
Plastic items that are not heat resistant
Older cutlery with glued parts that is not temperature resistant
Bonded cutlery items or dishes
Pewter or cooper items
Lead crystal glass
Steel items subject to rusting
Wooden platters
Items made from synthetic fibre

⚠ WARNING!
Do not let any item extend through bottom

Are of limited suitability
Some types of glasses can become dull after a large number of washes

Silver and aluminium parts have a tendency to discolour during washing

Glazed patterns may fade if machine washed frequently

NOTE: Do not put in items that are dirty of cigarette ash, candle wax, lacquer or paint. If you buy new dishes please make sure that they are suitable for dishwashers.

NOTE: Please do not overload your dishwasher. There is only space for 15 standard dishes. Do not use dish that is not suitable for dishwashers. This is important for good results and for reasonable energy consumption.

Loading Cutlery and Dishes
Before loading the dishes, you should:
Remove large left-over
Soften remnants of burnt food in pans

When Loading the Dishes and Cutlery, Please Note:
Dishes and cutlery must not impede the rotation of the spray arms.
Load hollow items such as cups, glasses, pans etc. with the opening downwards so that water cannot collect in the container or a deep base.
Dishes and items of cutlery must not lie inside one another, or cover each other
- To avoid damage to glasses, they must not be touched
- Load large items which are most difficult to clean into the lower basket
- The upper basket is designed to hold more delicate and lighter dishware such as glasses, coffee and tea cups

Attention!
Long bladed knives stored in an upright position are a potential hazard!
Long and/or sharp items of cutlery such as carving knives must be positioned horizontally in the upper basket

Damage to Glassware and other Dishes
Possible causes:
- Type of glass or manufacturing process. Chemical composition of detergent.
- Water temperature and duration of dishwasher programme.

Suggested remedy:
- Use glassware or porcelain dishes that have been marked dishwasher-proof by the manufacturer.
- Use a mild detergent that is described as kind of dishes. If necessary, seek further information from detergent manufacturers.
- Select a programme with a low temperature.
- To prevent damage, take glass and cutlery out of the dishwasher as soon as possible after the programme has ended.

At the End of the Wash
When the working cycle has finished, the buzzer of dishwasher will ring for 6 times, then stop. Turn off the appliance using the "Power" button, shut off the water supply and open the door of the dishwasher. Wait a few minutes before unloading the dishwasher to avoid handling the dishes and utensils while they are still hot and more susceptible to breakage. They will also dry better.

6. Starting a Washing Programme

Wash cycle table

Program	Cycle Selection Information	Description of Cycle	Detergent Pre/main	Running Time (min)	Energy (kWh)	Water (L)
Intensive	For the heaviest soiled loads, such as pots, pans, casserole dishes and dishes that have been sitting with dried food on them for a while.	Pre-wash(40℃) Main wash(55℃) Rinse 1 Rinse 2 Hot rinse(65℃) Drying	5/29g (or 3in1)	167	1.35	16.0
Heavy	For heavy soiled loads, such as pots, plates, glasses and lightly soiled pans. standard daily cycle.	Main wash(60℃) Rinse 1 Rinse 2 Hot rinse(65℃) Drying	5/29g (or 3in1)	142	1.25	12.5
Normal (AS/NZS 2007.1)	For normally soiled loads, such as pots, plates, glasses and lightly soiled pans. Standard daily cycle	Pre-wash Main wash(46℃) Rinse Hot rinse(45℃) Drying	5/27.5g (or 3in1)	161	0.74	12.7
Rinse	For dishes that need to be rinsed and dried only	Pre-wash Hot rinse(70℃) Drying		60	0.86	8.0
Rapid	A shorter wash for lightly soiled loads that do not need drying.	Main wash(40℃) Hot rinse(50℃)	20g	47	0.60	8.0
Soak	To rinse dishes that you plan to wash later that day	Pre-wash		7	0.06	4.0

AS/NZS 2007.1:This programme is the test cycle. The information for comparability test in accordance with AS/NZS.2007.1, as follows:

- Capacity: 14 settings
- Position of Upper basket: Low position
- Rinse aid setting:6(or 4 for four setting dispenser)

⚠NOTE: We recommend you open the door slightly 50 mm to assist in drying of the dishes after every wash.

Turning on the Appliance

Starting a wash cycle...

Draw out the lower and upper basket, load the dishes and

1. push them back. It is recommended to load the lower basket first, then the upper one (see the section entitled "Loading the Dishwasher"). Pour in the detergent.

2. Insert the plug into the socket. The power supply is 220V-240V AC 50 Hz, the specification of the socket is 12 A 250 VAC.50 Hz.

Make sure that the water supply is turned on to full pressure. Close the door, press the "Power" button, press the " program " button to select a desired "Wash cycle". (See the section entitled "Wash Cycle Table".) .

NOTE: A click could be heard when the door is closed perfectly.

When the washing is over, you can shut off the switch by pressing "Power" button.

Change the Programme.

Premise: A cycle that is underway can only be modified if it has only been running for a short time. Otherwise, the detergent may have already been released, and the appliance may have already drained the wash water. If this is the case, the detergent dispenser must be refilled (see the section entitled " Fill in the Detergent ").

Press the ″Power″ button and turn on it again. Press the ″program? button to choose the expected cycle setting (see the section entitled "Starting a wash cycle. . . ").

⚠NOTE: If you open the door when the washing cycle underway, the appliance will pause and emit warning signals, the display appears E1. When you close the door, the machine will keep on working after 10 seconds.

The 6 programme lights show the state of the dishwasher :

a) One of the programme lights on --> cycle running

b) One of the programme lights bliking--> pause

NOTE: If all the lights begin to glimmer, that indicates the machine is out of order, please turn off the main power and water supply before calling a service.

Forget to Add Dish

A forgotten dish can be added any time before the detergent cup opens.

1Open the door a little to stop the washing.

2 After the spray arms stop working, you can open the door completely.

3 Add forgotten dishes.

4 Close the door, the dishwasher will work after ten seconds.

⚠ WARNING!

It is dangerous to open the door when washing, because the hot water may scald you.

Switch Off the Dishwasher

The digital display appears "---" and the buzzer rings 6 times, only in this case the programme has ended.

1.Switch off the dishwasher by pressing the "Power" button.

2.Turn off the water tap!

Open the door carefully. Hot steam may escape when the door is opened!

■Hot dishes are sensitive to knocks. The dishes should therefore be allowed to cool down around 15 minutes before removing from the appliance.

■Open the dishwasher's door, leave it ajar and wait a few minutes before removing the dishes. In this way they will be cooler and the drying will be improved.

Unloading the dishwasher

It is normal that the dishwasher is wet inside.

Empty the lower basket first and then the upper one. This will avoid water dripping from the upper basket onto the dishes in the lower one.

7. Maintenance and cleaning

Filtering System

The filter is used to avoid the big remnants and other sundries getting inside the pump. The residue can obstruct the filter in sometime.

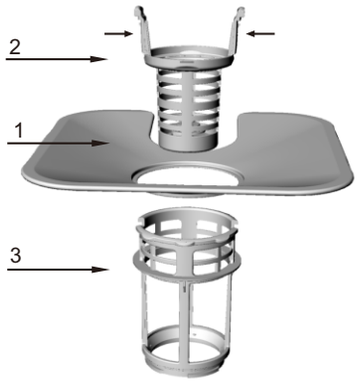

The filter system consists of a coarse filter, a flat (Main filter) and a micro filter (fine filter).
1 Flat filter
Food and debris will be trapped by a special jet on the lower spray arm.
2 Coarse filter
Big debris, such as bone and glass that could clog the drain will be trapped in the coarse filter.
To remove an item caught in this filter, gently squeeze the taps on the top of this filter and lift it out.
3 Micro filter
This filter holds soil and food residue in the sump area and prevents it from being redeposit on the dishes during a cycle.
- Inspect the filters for obstructions every time the dishwasher has been used.
- By unscrewing the coarse filter, you can remove the filter system. Remove any food remnants and clean the filters under running water.

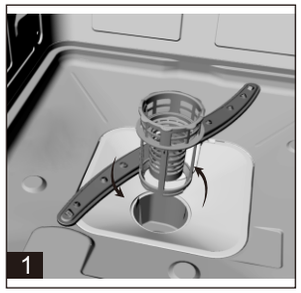

Step 1：contrarotate the Coarse filter ,and then lift it up;

Step 2：lift the Flat filter up



NOTE: If operate from step 1 to step 2, the filter system will be removed; while operate from step 2 to step 1, the filter system will be installed.

Filter assembly

For best performance and results, the filter assembly must be cleaned. The filter efficiently removes food particles from the wash water, allowing it to be recirculated during the cycle. For this reason, it is a good idea to remove the larger food particles trapped in the filter after each wash cycle by rinsing the semicircular filter and cup under running water. To remove the filter assembly, pull on the cup handle in the upward direction. The entire filter assembly should be cleaned once a week. To clean the coarse filter and the micro filter, use a cleaning brush. Then, reassemble the filter parts as shown in the figures above and reinsert the entire assembly in the dishwasher, positioning in its seat and pressing downward. The dishwasher must never be used without the filters. Improper replacement of the filter may reduce the performance level of the appliance and damage dishes and utensils.

⚠ WARNING!

Never run the dishwasher without the filters in place. When cleaning the filters, don't knock on them. Otherwise, the filters could be contorted and the performance of dishwasher could be debased.

Cleaning the Spray Arms

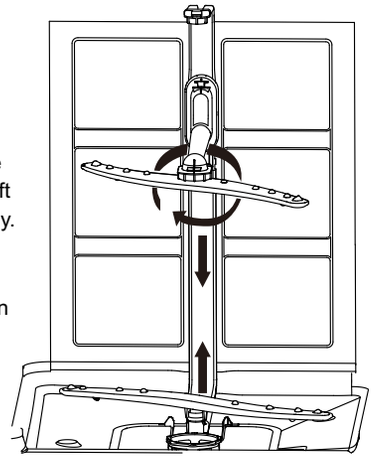

It is necessary to clean the spray arms regularly for hard water chemicals will clog the spray arm jets and bearings. To remove the spray arms, screw off the nut clockwise to take out the washer on top of the spray arm and remove the arm. Wash the arms in soapy and warm water and use a soft brush to clean the jets. Replace them after rinsing thoroughly.

Caring for the Dishwasher

To clean the control panel, use a lightly dampened cloth then dry thoroughly.
To clean the exterior, use a good appliance polish wax.
Never use sharp objects, scouring pads or harsh cleaners on any part of the dishwasher.

Protect Against Freezing

If your dishwasher is left in an unheated place during the winter, ask a service technical to:
1.Cut off electrical power to the dishwasher.
2.Turn off the water supply and disconnect the water inlet pipe from the water valve.
3.Drain water from the inlet pipe and water valve. (Use a pan to catch the water)
4.Reconnect the water inlet pipe to the water valve.
5.Remove the filter in the tub and the bottom and use a sponge to use up water in sump

Cleaning the Door

To clean the edge around the door, you should use only a soft warm, damp rag. To prevent penetration of water into the door lock and electrical components, do not use a spray cleaner of any kind.
Also, never use abrasive cleaners or scouring pads on the outer surfaces because they will scratch the finish. Some papers towels can also scratch or leave marks on the surface.

⚠ WARNING!

Never use a spray cleaner to clean the door panel for it could damage the door lock and electrical components. It is not allowed to use the abrasive agent or some paper towel because of the risk of scratching or leaving spots on the stainless steel surface.

How to Keep Your Dishwasher in Shape

After Every Wash
After every wash, turn off the water supply to the appliance and leave the door slightly ajar so that moisture and odors are not trapped inside.

Remove the Plug
Before cleaning or performing maintenance, always remove the plug from the socket. Do not run risks.

No Solvents or Abrasive Cleaning
To clean the exterior and rubber parts of the dishwasher, do not use solvents or abrasive cleaning products. Use only a cloth and warm soapy water. To remove spots or stains from the surface of the interior, use a cloth dampened with water and a little white vinegar, or a cleaning product made specifically for dishwashers.

When You Go on holiday
When you go on holiday, it is recommended that you run a wash cycle with the dishwasher empty and then remove the plug from the socket, turn off the water supply and leave the door of the appliance slightly ajar. This will help the seals last longer and prevent odors from forming in the appliance.

Moving the Appliance
If the appliance must be moved, try to keep it in the vertical position. If absolutely necessary, it can be positioned on its back.

Seals
One of the factors that cause odors to form in the dishwasher is food that remains trapped in the seals. Periodic cleaning with a damp sponge will prevent this.

⚠ Attention:
The installation of the pipes and electrical equipments should be done by professionals.

⚠ Warning	
	Electrical Shock Hazard! Disconnect electrical power before installing dishwasher. Failure to do so can result in death or electrical shock.

8. Installation

⚠ Keep this instruction manual in a safe place for future reference. If the appliance is sold, given away or moved, please ensure the manual is kept with the machine, so that the new owner may benefit from the advice contained within it.

⚠ Please read this instruction manual carefully: it contains important information regarding the safe installation, use and maintenance of the appliance.

⚠ If the appliance must be moved at any time, keep it in an upright position; if absolutely necessary, it may be tilted onto its back.

Positioning and leveling

1. Remove the appliance from all packaging and check that it has not been damaged during transportation. If it has been damaged, contact the retailer and do not proceed and further with the installation process.

2. Check the dishwasher by placing it so that its sides or back panel are in contact with the adjacent cabinets or even with the wall. This appliance can also be recessed under a single work top (see the Assembly instruction sheet).

3. Position the dishwasher on a level and sturdy floor. If the floor is uneven, the front feet of the appliance may be adjusted until it reaches a horizontal position (the angle of inclination must not exceed 2 degrees). If the appliance is levelled correctly, it will be more stable and much less likely to move or cause vibrations and noise while it is operation.

Connecting the water and electricity supplies

⚠ Connection to the water and electricity supplies should only be performed by a qualified technician.

⚠ The dishwasher should not stand on top of the water hoses or the electricity supply cable

⚠ The appliance must be connected to the water supply network using new piping. Do not use old piping.

★ Connecting the water inlet hose

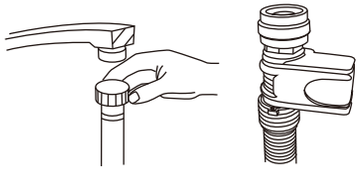

Connect the cold water supply hose to a threaded 3/4(inch) connector and make sure that it is fastened tightly in place. If the water pipes are new or have not been used for an extended period of time, let the water run to make sure that the water is clear and free of impurities. If this precaution is not taken, there is a risk that the water inlet can get blocked and the appliance could be damaged.

Connecting the water outlet hose

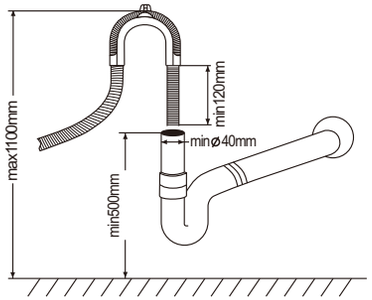

Fit the drainage hose of your machine to the drainage pipe without bending.

If the length of the hose is not sufficient, apply to the authorized service for an extension made from the same material as the original. Remember that the length of the hose should not exceed 4meters even when with an extension.

If the drainage hose is longer the 4 m. the dishes will not be cleaned properly secure your hose firmly to the drainage pipe to avoid it coming off during the washing process.

Electrical connection

Before inserting the plug into the electrical socket, make sure that:

- the socket is earthed and complies with current regulations;
- the socket can withstand the maximum load of the appliance, which is indicated on the data plate located on the inside of the door(see description of the appliance);
- the power supply voltage falls within the values indicated on the data plate on the inside of the door;
- the socket is compatible with the plug of the appliance. If this is not the case, ask an authorised technician to replace the plug (see assistance); do not use extension cables or multiple sockets.

★ For optional

⚠ Once the appliance has been installed, the power supply cable and the electrical socket should be easily accessible.

⚠ The cable should not be bent or compressed.

⚠ If the power supply cable is damaged, it must be replaced by the manufacturer or its Technical Assistance Service in order to prevent all potential hazards.(See Assistance)

⚠ The company shall not be held responsible for any incidents that occur if these regulations are not observed.

Advice regarding the first wash cycle

After the appliance has been installed, immediately before running the first wash cycle, completely fill the dispenser of rinse (see Rinse aid).

Positioning the Appliance

Position the appliance in the desired location. The back should rest against the wall behind it, and the sides, along the adjacent cabinets or wall. The dishwasher is equipped with water supply and drain hoses that can be positioned to the right or the left to facilitate proper installation.

Leveling the Appliance

Once the appliance is positioned, adjust the feet (screwing them in or out) to adjust the height of the dishwasher, making it level. In any case, the appliance should not be inclined more than 2° .

NOTE: The maximum adjustment height of the feet is 20 mm.

How to Drain Excess Water From Hoses

If the sink is 1000mm higher from the floor, the excess water in hoses cannot be drained directly into the sink. It will be necessary to drain excess water from hoses into a bowl or a suitable container that is held outside and lower than the sink.

Water Outlet

Connect the water drain hose. The drain hose must be correctly fitted to avoid water leaks.
Ensure that the water inlet hose is not kinked or squashed.

Extension Hose

If you need a drain hose extension, observe to use a similar drain hose..
It must be no longer than 4 metres; otherwise the cleaning effect of the dishwasher could be reduced.

Syphon Connection

The waste connection must be at a height of between 50cm (minimum) and 100cm (maximum) from the bottom of the dish. The water drain hose should be fixed by a hose clip.

Start of Dishwasher

The followings should be checked before starting the dishwasher:
1 Whether the dishwasher is level and fixed
2 Whether the inlet valve is opened
3 Whether there is leakage at the connections of the conducts
4 Whether the wires are tightly connected
5 Whether the power is switched on
6 Whether the inlet and drain hoses are knotted
7 All packing materials and printings should be taken out from the dishwasher

Attention

After installation, please put this manual into the bags of printings.
The content of this manual is very helpful to the users.

9. Troubleshooting Tips

Error codes

When some malfunctions happen, the appliance will display error codes to warn you.

Codes	Meanings	Possible Causes
E1	Door open	The door is opened when the dishwasher is operating
E2	Water inlet	Water inlet malfunction
E3	Water drainage	Water drainage malfunction
E4	Temperature sensor	Temperature sensor malfunction
E5	Overflow/leakage	Overflow occurs/Water leakage occurs
E6	Water leakage	Water leakage occurs
E7	Heating element	Abnormal heating

⚠ WARNING!
If overflow occurs, turn off the main water supply before calling a service. If there is water in the base pan because of an overfill or small leak, the water should be removed before restarting the dishwasher.

Before Calling for Service

Reviewing the charts on the following pages may make you be free of calling for service.

Problem	Possible Causes	What To Do
Dishwasher doesn't run	Fuse blown, or the circuit breaker acted	Replace fuse or reset circuit breaker. Remove any other appliances sharing the same circuit with the dishwasher.
	Power supply is not turned on	Make sure the dishwasher is turned on and the door is closed securely. Make sure the power cord is properly plugged into the wall socket.
	Water pressure is low	Check that the water supply is connected properly and the water is turned on.
Drain pump doesn't stop	Overflow	The system is designed to detect an overflow. When it does, it shuts off the circulation pump and turns on the drain pump.
Noise	Some audible sounds are normal	Sound from detergent cup opening.
	Utensils are not secure in the baskets or something small has dropped into the basket	To ensure everything is secured in the dishwasher.
	Motor hums	Dishwasher has not been used regularly. If you do not use it often, remember to set it to fill and pump out every week, which will help keep the seal moist.
Suds in the tub	Improper detergent	Use only the special dishwasher detergent to avoid suds.If this occurs, open the dishwasher and let suds evaporate. Add 1 gallon of cold water to the tub. Close and latch the dishwasher, then start the "soak" wash cycle to drain out the water... Repeat if necessary.
	Spilled rinse agent	Always wipe up rinse agent spills immediately.
Stained tub interior	Detergent with colorant was used	Make sure that the detergent is the one without colorant.
Dishes and flatware not clean	Improper program Improper basket loading	Select a stronger programme. Make sure that the action of the detergent dispenser and spray arms are not blocked by large dishware.
Spots and filming on glasses and flatware	1 Extremely hard water 2 Low inlet temperature 3 Overloading the dishwasher 4 Improper loading 5 Old or damp powder detergent 6 Empty rinse agent dispenser 7 Incorrect dosage of detergent	To remove spots from glassware: 1 Take out all metal utensils out of the dishwasher. 2 Do not add detergent. 3 Choose the longest cycle. 4 Start the dishwasher and allow it to run for about 18 to 22 minutes, then it will be in the main wash. 5 Open the door to pour 2 cups of white vinegar into the bottom of the dishwasher. 6 Close the door and let the dishwasher complete the cycle. If the vinegar does not work: Repeat as above, except use 1/4 cup (60 ml)of citric acid crystals instead of vinegar.

Cloudiness on glassware	Combination of soft water and too much detergent	Use less detergent if you have soft water and select a shortest cycle to wash the glassware and to get them clean.
Yellow or brown film on inside surfaces	Tea or coffee stains	Using a solution of 1/2 cup of bleach and 3 cups of warm water to remove the stains by hand. ⚠WARNING You have to wait for 20 minutes after a cycle to let the heating elements cool down before cleaning interior; otherwise, burns will happen.
	Iron deposits in water can cause an overall film	You have to call a water softener company for a special filter.
White film on inside surface	Hard water minerals	To clean the interior, use a damp sponge with dishwasher detergent and wear rubber gloves. Never use any other cleaner than dishwasher detergent for the risk of foaming or suds.
The detergent dispenser lid cannot be clos -ed properly	Clogged detergent residue is blocking the catch	Clean the detergent from the catch.
Detergent left in dispenser cups	Dishes block detergent Cups	Re-loading the dishes properly.
Steam	Normal phenomenon	There is some steam coming through the vent by the door latch during drying and water draining.
Black or gray marks on dishes	Aluminum utensils have rubbed against dishes	Use a mild abrasive cleaner to eliminate those marks.
Water standing on the bottom of the tub	This is normal	A small amount of clean water around the outlet on the tub bottom keeps the water seal lubricated.
Dishwasher leaks	Overfill dispenser or rinse aid spills	Be careful not to overfill the rinse aid dispenser. Spilled rinse aid could cause oversudsing and lead to overflowing. Wipe away any spills with a damp cloth.
	Dishwasher isn't level	Make sure the dishwasher is level.

Technical information

W×D×H	600mm×600mm×845mm
Voltage connected load:	See rating label
Water pressure:	0.04--1.0MPa
Power supply:	see rating label
Capacity:	14 Place settings
Hot water connection:	Max 60 ℃