Franklin Electric

INLINE CONSTANT PRESSURE SYSTEM
OWNER'S MANUAL

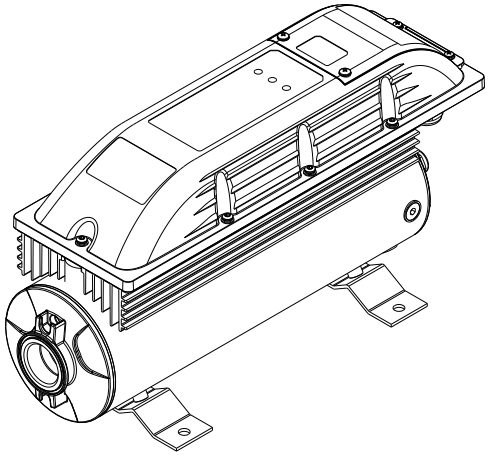

BEFORE YOU START

BEFORE INSTALLING PUMP, BE SURE TO READ THIS OWNER'S MANUAL CAREFULLY.

REFER TO PRODUCT DATA PLATE(S) FOR ADDITIONAL OPERATING INSTRUCTIONS AND SPECIFICATIONS.

⚠CAUTION

Keep work area clean, well-lit and uncluttered.

Keep safety labels clean and in good condition.

Wear safety glasses while installing or performing maintenance on pump.

Adhere to the guidelines of the National Electric Code (NEC) or Canadian Electric Code (CEC), and any other state and local codes for ALL electrical installations. Check with the appropriate agencies or contact a licensed electrician.

Adhere to the guidelines of national, state and local plumbing codes when installing this product. Check with the appropriate agencies or water system professional for additional information.

Most water system problems result from improper installation. It is suggested that you read this manual carefully before installing your pump.

The "TROUBLESHOOTING SECTION" will assist you in locating and eliminating the cause of any trouble you may encounter after installation. Check and make available all the tools you will need to install your pump. Required tooling may include wrenches, pipe sealant, pipe fittings and nipples, screwdriver, etc. Be sure to have available proper and adequate wiring material to complete the installation correctly.

ATTENTION!
IMPORTANT INFORMATION FOR INSTALLERS OF THIS EQUIPMENT!

THIS EQUIPMENT IS INTENDED FOR INSTALLATION BY TECHNICALLY QUALIFIED PERSONNEL. FAILURE TO INSTALL IT IN COMPLIANCE WITH NATIONAL AND LOCAL ELECTRICAL CODES, AND WITHIN FRANKLIN ELECTRIC RECOMMENDATIONS, MAY RESULT IN ELECTRICAL SHOCK OR FIRE HAZARD, UNSATISFACTORY PERFORMANCE, AND EQUIPMENT FAILURE. FRANKLIN INSTALLATION INFORMATION IS AVAILABLE FROM PUMP MANUFACTURERS AND DISTRIBUTORS, AND DIRECTLY FROM FRANKLIN ELECTRIC. CALL FRANKLIN TOLL FREE 800-348-2420 FOR INFORMATION.

⚠WARNING

SERIOUS OR FATAL ELECTRICAL SHOCK MAY RESULT FROM FAILURE TO CONNECT THE INLINE SYSTEM, METAL PLUMBING, AND ALL OTHER METAL NEAR THE INLINE SYSTEM OR CABLE, TO THE POWER SUPPLY GROUND TERMINAL USING WIRE NO SMALLER THAN MOTOR CABLE WIRES. TO REDUCE RISK OF ELECTRICAL SHOCK, DISCONNECT POWER BEFORE WORKING ON OR AROUND THE WATER SYSTEM. DO NOT USE INLINE SYSTEM IN SWIMMING AREAS.

READ AND FOLLOW SAFETY INSTRUCTIONS

This is the safety alert symbol. When you see this ⚠ symbol on your pump or in this manual, look for one of the following signal words and be alert to the potential for personal injury:

⚠DANGER warns about hazards that **will** cause serious personal injury, death or major property damage if ignored.

⚠WARNING warns about hazards that **can** cause serious personal injury, death or major property damage if ignored.





⚠CAUTION warns about hazards that **will** or **can** cause minor personal injury or major property damage if ignored.

NOTICE indicates special instructions which are important but not related to hazards.
Carefully read and follow all safety instructions in this manual and on pump.

⚠WARNING **HAZARDOUS PRESSURE**: Do not run pump against closed discharge. Release all system pressure before working on any component.

⚠CAUTION Do not run pump dry. Fill pump with water before starting or pump will be damaged.

This Inline Constant Pressure System is guaranteed by the manufacturer. In the event of a product failure, it must be returned to an authorized water system professional for repairs. Warranty is void if repairs are not made by an authorized technician.

ELECTRICAL SAFETY

⚠CAUTION Make sure all ELECTRICAL POWER IS OFF before connecting any electrical wires.

⚠ WARNING



Hazardous voltage. Can shock, burn, or cause death.

Ground pump before connecting to power supply. Disconnect power before working on pump, motor or tank.

⚠ Wire Inline System for correct voltage. See "Electrical Installation" section of this manual and Inline System nameplate.

⚠ Connect power supply ground to ground terminal in wiring compartment before connecting power supply.

⚠ Meet National Electrical Code (NEC) or Canadian Electrical Code (CEC) and local codes for all wiring.

⚠ Follow all pump wiring instructions provided in this manual.

⚠CAUTION **DO NOT touch an operating drive. The surface of the drive may be HOT. Allow the drive to cool for thirty (30) minutes before handling.**

⚠ Suitable for use on a circuit capable of delivering not more than 5000 RMS symmetric amperes, 260 volt maximum.

⚠ The output connector on the drive is only intended for use with the motor specified in the Replacement Parts section of this manual.

⚠ Integral solid state short circuit protection does not provide branch circuit protection. Branch circuit protection must be provided in accordance with the National Electric Code or Canadian Electric Code and local codes.

GENERAL SAFETY

The Franklin Electric Inline System is designed and built with a NEMA 4 approved drive enclosure to protect the pump's electronic components.

INLINE SYSTEM KEY FEATURES

SYSTEM FEATURES:

- Constant water pressure with a wide range of settings. (10-80 psi, 0.7 - 5.5 bar)
- Pump speed is controlled to provide the optimum performance without overloading the motor
- Product Power Rating: 1.2 hp (0.9 kW)
- Low current motor start-up (soft-starting)
- Quiet operation
- Single pump/motor/drive controller design
- Compact footprint, 19 in x 8 in (480 mm x 200 mm)
- Shipping weight: 50 lbs (22.7 kg)

PUMP FEATURES:

- Operates on a wide range of flows from flooded suction to 35 GPM (135 LPM)
- Requires minimum incoming pressure of 3 PSI (0.2 bar) Exception: Cisterns may be flooded suction without vortexing
- Increases incoming pressure by up to 60 PSI (4.1 bar)
- Stainless steel construction for all wetted surfaces

DRIVE CONTROLLER PROTECTION FEATURES:

- No in-rush (power-on transient) current
- Over pressure shut off optional (See Replacement Parts Section)
- Low water shut off
- Locked pump detection/shut off
- High voltage/lightning surge protection
- Low line voltage protection
- Motor under and overload protection
- Open and short circuit protection
- NEMA 4 enclosure

INSPECT YOUR SHIPMENT

All Franklin Electric Inline Systems are carefully tested, inspected, and packaged to insure their arrival in perfect condition. When the pump is received, examine it closely to make sure there is no damage that may have occurred in shipping. If damage is evident, report this immediately to your shipping carrier and product dealer. The shipping carrier assumes full responsibility for the shipment's safe arrival. Any claim for damage to the shipment, either visible or concealed, must be made through the shipping carrier first.

PACKAGE INCLUDES:

- Inline 1100 Constant Pressure System pump and controller unit
- Pressure sensor and boot
- Sensor adjustment tool
- Installation manual

CONSTANT PRESSURE INTRODUCTION

The Franklin Electric Inline System provides consistent water pressure regulation using advanced electronics to drive the pump/motor according to the system's real-time demand. The water pressure demand is under constant monitoring through a highly accurate, heavy-duty, long-life pressure sensor, which is included with and wired into the system at the time of installation. By adjusting the pump/motor speed, the Inline System automatically reacts to any change in system demand while maintaining a constant output pressure. The Inline System's constant output pressure should not fluctuate more than a PSI or two, even though the overall system's water flow requirement may change dramatically. For example, a small demand on the system, such as a bathroom faucet, results in the motor/pump running at its lowest speed. As greater demands are placed on the system, such as opening additional faucets or using appliances, the speed increases accordingly to maintain the desired system pressure.

SYSTEM DIAGNOSTICS

In addition to regulating pump pressure and accurately controlling motor operation, the Inline System continuously monitors system performance and can detect a variety of abnormal conditions. In many cases, the controller will compensate as needed to maintain continuous system operation. But if there is high risk of equipment damage, the controller will protect the system by shutting itself down. To help identify that there is a problem with the system (which includes incoming water and electricity from the utility company) the Inline System will display that there is a fault condition. See Troubleshooting Section for fault codes. If possible, the controller will try to restart when the fault condition subsides.

INSTALLATION

LOCATION OF THE INLINE CONSTANT PRESSURE SYSTEM

Decide on a location for the pump installation that is suitable based on the enclosure rating of the Inline System.

⚠WARNING Liquid tight conduit and fittings must be used to maintain NEMA 4 rating.

Choose a clean, well-ventilated location that provides protection from freezing, flooding, and excessive heat. In addition, it should provide access for servicing and allow convenient draining of the pump, tank, and service pipes. A prepared foundation is not essential, provided the surface is hard and level. It can be mounted in any orientation depending on the space available.

NOTICE: installation in direct sunlight can reduce system power and reduce drive life.

PLUMBING, PIPING AND HOSES

In general, keep the suction and discharge lines as large as possible. Avoid using bends, elbows and fittings whenever possible. All suction connections must be airtight, so use pipe compound on all threaded joints. Use a suction strainer when applicable to prevent solids and foreign matter from being drawn into the pump.

FLOW CAPACITY BY PIPE SIZE

The minimum supply pipe diameter should be selected not to exceed a maximum water velocity of 8 ft/sec (2.4 m/s). Use the table below for selection of the proper supply pipe size.

Minimum Pipe Diameter	Maximum Flow rate GPM
1/2"	4.9 (18.5 LPM)
3/4"	11.0 (41.6 LPM)
1"	19.6 (74.2 LPM)
1-1/4"	30.6 (116 LPM)
1-1/2"	44.1 (167 LPM)

WATER SUPPLY REQUIREMENT

The Inline System is not designed to draw/lift water from a source below the pumping unit. There is not an incoming flow requirement, other than that the system needs to be supplied with a constant supply of water to keep the unit completely full of water at all times. It is recommended that the system be supplied with inlet line ¾" diameter or larger.

INCOMING PRESSURE REQUIREMENT

The Inline System is designed to operate at minimum incoming pressures as low as 3 PSI (0.2 bar). When used on a cistern the incoming pressure requirement is waived; but a water level must be maintained in the cistern to prevent a vortex from forming.

SUCTION PIPING

When the pump is located at a distance from the water source, the suction piping may have to be increased in diameter to reduce friction loss. The friction loss in a system increases:

1.) As the flow rate increases

2.) As the piping size decreases

Refer to the included Inline System's performance tables (Appendix 1) and friction loss tables (Appendix 2) to determine the amount of head lost for a given application.

DISCHARGE PIPE SIZES FOR INSTALLATION

When the pump is located at a distance from points of water use, it is necessary to increase the discharge pipe size in order to reduce friction loss. The friction loss in a system increases:

1.) As the flow rate increases

2.) As the piping size decreases

Refer to the included Inline System's performance tables (Appendix 1) and friction loss tables (Appendix 2) to determine the amount of head lost for a given application.

PRESSURE TANK

System Pressure (at Pressure Sensor)	Pressure Tank Setting (±2 PSI)
25	18
30	21
35	25
40	28
45	32
50 Factory Setting	35
55	39
60	42
65	46
70	49
75	53
80	56

NOTE: 1 PSI = 0.068 bar

The Inline System needs a small pressure tank placed on the pump outlet to maintain constant pressure. The tank supplies water while the pump ramps up to speed and in circumstances where only a small amount of water is required for a short period of time. In addition, the tank prevents water hammer by acting as a system buffer. This buffer also helps to prevent pressure spikes when there is a sudden change in demand.

For 12 gpm (45 LPM) flow or greater, minimum pressure tank size is 4 gallons (15 L); for 12 gpm (45 LPM) flow, minimum pressure tank size is 2 gallons (7.5 L).

Pressure Tank Pre-charge (PSI)

The pressure tank pre-charge setting should be 70% of the system pressure sensor setting as indicated in the preceeding table.

NOTE: Check tank pre-charge regularly to maintain optimum pressure regulation.

INSTALLATION

NOTICE: READ AND FOLLOW ALL INSTRUCTIONS.

⚠WARNING Hazardous voltage can shock, burn or cause death.

⚠CAUTION Improper wiring can result in permanent damage to the system. Pump connection must comply with National Electric Code (NEC) or Canadian Electric Code (CEC), and all applicable local codes.

⚠CAUTION If you are not sure of the proper electrical connections, employ a competent electrician for the installation. This ensures the installation complies with all noted electrical codes.

⚠ Disconnect power at electrical panel before making any electrical connections. Supply voltage must be +/- 10% of Inline System nameplate voltage (230V).

Low or high voltage can damage the Inline System and will void the warranty. Connect pump to dedicated branch circuit with no other appliances on it.

⚠ Do not operate pump unless pump is grounded.

⚠ A fused disconnect switch or circuit breaker should be placed at or near the pump as required by local electrical codes.

INSTALLATION PROCEDURE PLUMBING

1. Disconnect electrical power at the main breaker.
2. Drain the system (if applicable).
3. Mount the Inline System in the desired location using mounting screws. Screw locations are shown in **FIGURE 1**. The Inline System may be installed in any orientation.
4. Install inlet and outlet plumbing and pressure tank as shown in **FIGURE 2**. A check valve must be installed in the inlet and outlet plumbing. The outlet check valve should be between the pump and the pressure tank to prevent the possibility of backflow in to public water systems, and to ensure proper system operation. The inlet check valve should be used when no other backflow prevention device is present. This inlet check valve should be installed before the optional bypass loop if that plumbing is used. Be sure to check all local plumbing codes to ensure that all requirements pertaining to backflow prevention are met.
5. Install the pressure sensors at the pressure tank tee downstream of the pressure tank. (The pressure tank should be between the pressure sensor and the pump.) The pressure sensor has a 1/4-18 National Pipe Thread (NPT) connection. The pressure sensor should not be installed in an inverted orientation (upside down). Make sure the pressure sensor and tank are not located more than 5 feet off the main piping.
6. Install a pressure relief valve downstream of the check valve. The discharge must be plumbed to a drain rated for maximum pump output at relief pressure setting.

⚠WARNING Inline systems can develop very high pressure in some situations. Always install a pressure relief valve able to pass full pump flow at 100 PSI (6.9 bar). Install the pressure relief valve near the pressure tank.

⚠WARNING

Serious or fatal electric shock may result from failure to connect the Inline System to the service entrance ground. Also ground metal plumbing and all other metal near the Inline System. When grounding these components, use a wire no smaller than the power supply wires from the circuit breaker to the Inline System. To reduce the risk of electric shock, disconnect power before working on or around the water system.

CAPACITORS INSIDE THE INLINE SYSTEM CONTROLLER CAN STILL HOLD LETHAL VOLTAGE EVEN AFTER POWER HAS BEEN DISCONNECTED. ALLOW 5 MINUTES FOR DANGEROUS INTERNAL VOLTAGE TO DISCHARGE BEFORE REMOVING ACCESS PANEL.

This pump has not been investigated for use in swimming pool or marine areas.

FIGURE 1:

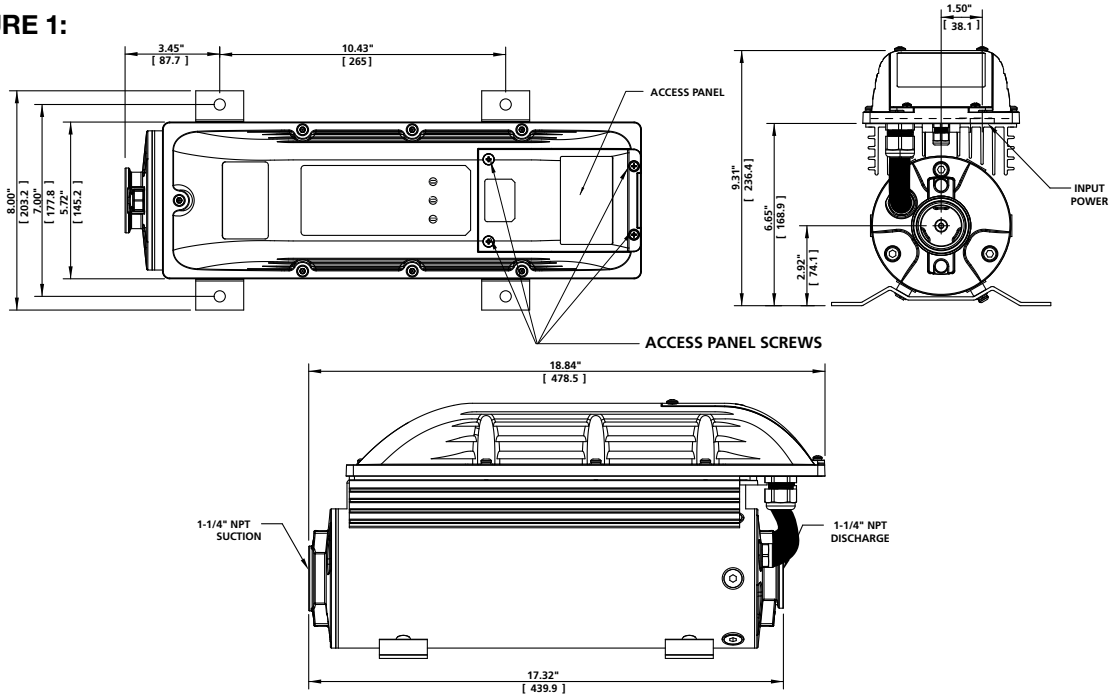

TYPICAL INSTALLATION

The Inline System is designed to both increase a system's incoming pressure, and to provide the system with constant pressure across all outlets. See **FIGURE 2** for a graphical representation of what a typical installation may look like.

FIGURE 2:

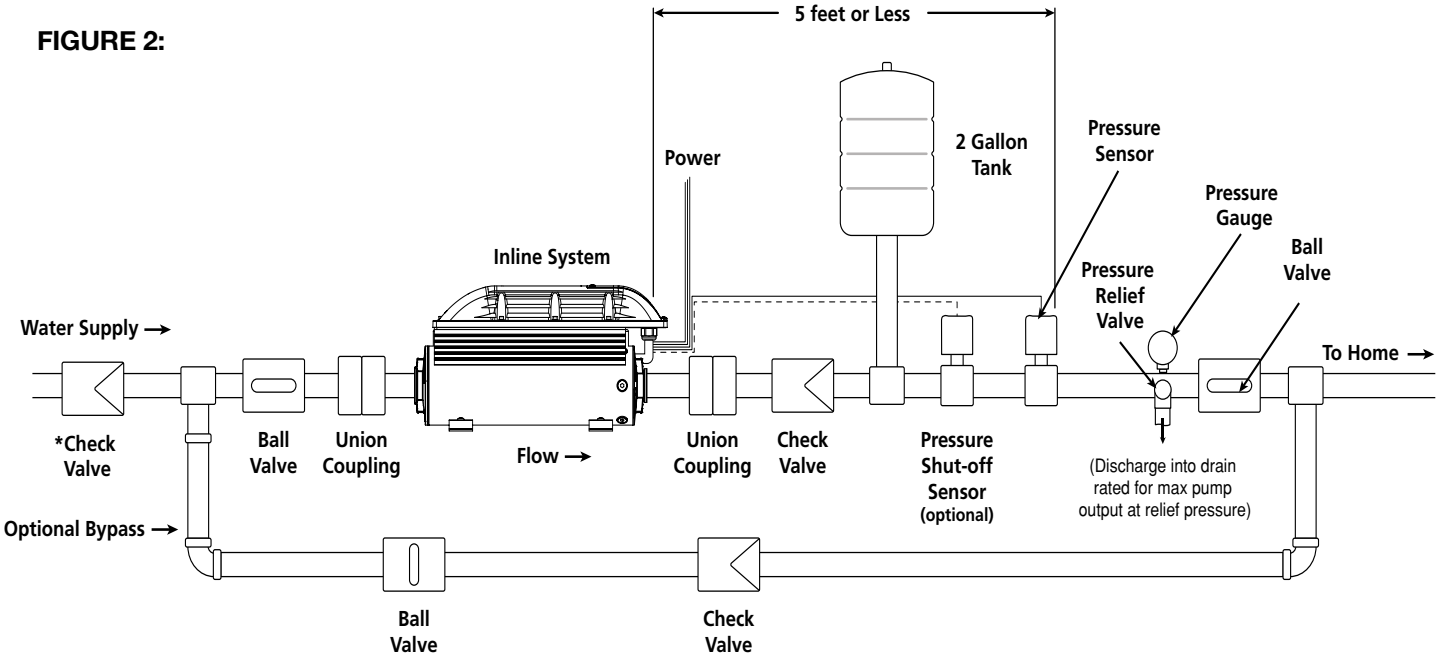

***NOTICE:** If system plumbing does not have a backflow prevention device, a check valve is required on the incoming water supply line.

NOTE: These optional components are shown in a typical installation diagram. They should be used at the installer's discretion as required for particular applications.

INSTALLATION PROCEDURE WIRING

1. Disconnect electrical power at the main breaker.

2. Verify that the dedicated branch circuit for the Inline System is equipped with a 15 amp circuit breaker.

3. Remove the access panel of the Inline System by removing the four access panel screws as shown in **FIGURE 1**.

4. For your convenience the pressure sensor has been pre-wired inside the unit. The red and black wires are attached to the pressure sensor inputs and the white and green wires are connected to the pressure shut-off sensor input (optional). See **FIGURES 3 AND 4** showing the sensor connections.

5. If mounting or in wet environments, a liquid tight conduit fitting and liquid tight conduit are required |(not supplied) to ensure that the enclosure maintains a water tight, NEMA 4 rating. Install the liquid tight conduit fitting into the conduit hole in front of the L1, L2 line connector. (**FIGURE 3**)

FIGURE 3:

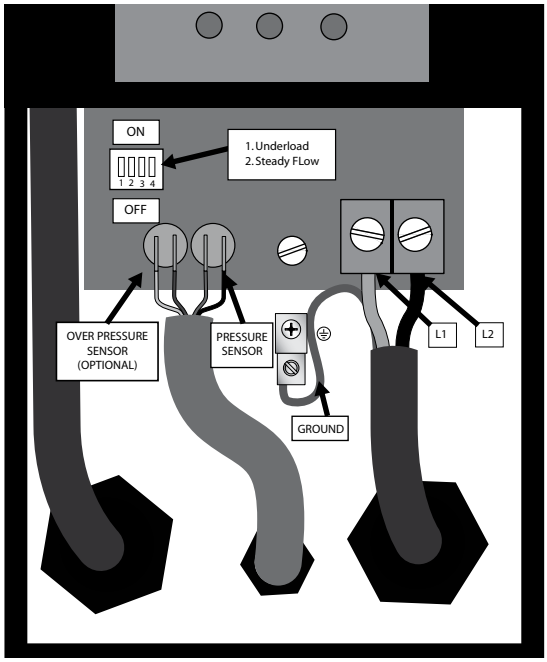

⚠WARNING Liquid tight conduit and fittings must be used to maintain NEMA 4 rating.

6. Route supply wires through the conduit fitting into the wiring chamber.

7. Connect the supply ground wire to the ground lug in the wiring compartment.

NOTICE: The safety earth ground connection is marked at its terminal using the ⏚.

8. Connect the supply 230V wires to the screw terminal marked L1 and L2. Supply should be 60ºC (140°F)/75ºC (167°F) copper wires and the terminals should be tightened to a torque of 12 in-lbs (1.35 Nm).

9. Replace the access panel and tighten the four lid screws. For proper sealing, the lid screws should be tightened to a torque of 10 in-lbs (1.13 Nm).

10. Set the pressure tank pre-charge at 70% of the desired water pressure setting. To check the tank's pre-charge, de-pressurize the water system by opening a tap. Measure the tank pre-charge with a pressure gauge at its inflation valve and make the necessary adjustments.

OPERATION

RATINGS

⚠CAUTION Maximum operating pressure should be limited to whatever level is needed to protect the rest of the existing system plumbing. When required, a pressure relief valve should be installed, and/or the optional over pressure sensor can be used.

Maximum suction pressure is 70 psi (4.8 bar). Maximum water temperature is 104 °F (40 °C). Avoid pumping abrasive or sandy water.

⚠WARNING Hazardous Pressure: Do not run pumps against a closed discharge, or at a system operating pressure above 145 psi (10 bar).

⚠CAUTION This pump has been evaluated for use with water only.

PRIMING

Never run the pump dry. Fill the suction pipe, pump and discharge piping completely with water. A typical installation will be supplied by either a tank or a pressurized water source, creating what is known as flooded suction condition.

STARTING

Close all system outlets, then slightly crack one system outlet to allow excess air to bleed out of the system. Start the pump. Gradually, but immediately, begin opening the discharge valve to half open. If after a few minutes of running you do not get water, repeat priming process (the pump may be locked by excess air that is trapped in the unit). Once the pump is operating, fully open the discharge valve and a system outlet, letting the pump operate until the water is running clear. No further priming should be needed unless the pump is drained or there is a leak in the suction plumbing.

Leaky Systems

Leaky water systems might keep the controller running due to the accurate pressure sensing capability of the pressure sensor. Continuous running or starts and stops do not hurt the controller, pump or motor. However, to reduce the on-time of the controller/pump/motor, a "Bump-Mode" procedure is installed. During low flow (or leaky) conditions, this feature periodically increases the speed of the pump several psi above the set point and shuts off the pump. This adds some time to bleed off before the system starts up again.

Pressure Drop

Although the pressure is constant at the pressure sensor, pressure drops may be noticeable in other areas of the home when additional taps are opened. This is due to

restrictions in the plumbing and will be more pronounced the farther the taps are from the pressure sensor. This would be true of any system, and if observed, should not be interpreted as a failure in the performance of the Inline Constant Pressure System.

ADJUSTING THE PRESSURE SENSOR

The pressure sensor communicates the system pressure to the Inline Constant Pressure System. The sensor is preset at the factory to 50 psi (3.4 bar), but can be adjusted by the installer using the following procedure:

a. Remove the rubber end-cap (**FIGURE 4**).

b. Using a 7/32" Allen-wrench (provided), turn the adjusting screw clockwise to increase pressure and counter-clockwise to decrease pressure. The adjustment range is between 25 and 80 psi (1.7 and 5.5 bar) (1/4 turn = approximately 3 psi (0.2 bar)).

c. Replace the rubber end cap.

d. Cover the pressure sensor terminals with the rubber boot provided (**FIGURE 4**)

FIGURE 4:

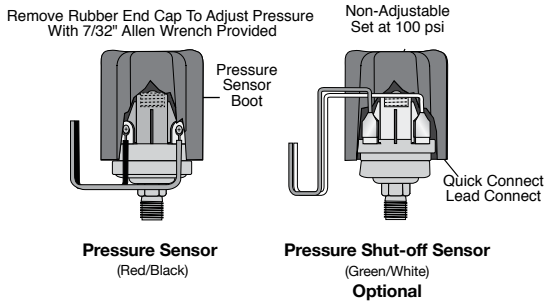

ADJUSTING PUMP SO SYSTEM DEMAND IS NOT MORE THAN SYSTEM SUPPLY

Inline Systems are typically used to increase municipal water pressure anywhere from 10 psi (0.7 bars) to 70 psi (4.8 bars) above what is being supplied by the water utility. For the pump to operate properly as it boosts the municipal water to the desired pressure, a consistent and steady flow of water is required. The system will fail prematurely if it is set to operate at a point beyond what can be supplied.

PROCESS TO ENSURE PUMP IS RECEIVING ENOUGH WATER TO MEET DEMAND

1.) Install a shut-off valve in the plumbing near the discharge of the pump.

2.) Close the valve, but make sure that the supply water is allowed to freely flow into the pump without restriction.

3.) Adjust system for maximum flow demand.

4.) Turn on the pump, and begin opening the discharge's shut-off valve.

5.) Continue opening the discharge valve until a very distinct noise is heard coming from the pump. This noise is called Cavitation (which can destroy the pump over time), and will sound like there is gravel inside the pump. STOP opening the discharge valve once cavitation is heard.

6.) Slowly close the discharge valve until the cavitation is no longer heard.

7.) The pump is now adjusted so that the system demand will not exceed what can be supplied.

8.) If the supply pressure or water demand varies over time, this procedure may need to be repeated to eliminate cavitation.

DRIVE DIP SWITCH OPTIONS

The Inline System is factory set to properly operate in most installations without needing any adjustments or changes to the DIP switch settings. If changes are required, the following is a description of what control logic changes will occur as a switch's position is changed.

⚠WARNING Serious or fatal electrical shock may result from contact with internal electrical components. DO NOT, under any circumstances, attempt to modify DIP switch settings until power has been removed and 5 minutes have passed for internal voltages to discharge! Power must be removed for DIP switch setting to take effect.

UNDERLOAD SENSITIVITY SELECTION

The Inline System controller is configured at the factory to ensure detection of underload faults in a wide variety of pumping applications. In rare cases this trip level may result in nuisance faults. If the underload switch is activated it is best to observe the system's behavior during the underload condition to be sure it will perform as expected. Once the controller begins to regulate pressure, check operation at several flow rates to make sure the default sensitivity does not induce nuisance underload trips.

If it is necessary to adjust the underload sensitivity, remove power and allow the controller to discharge. Wait 5 minutes to allow internal voltage to dissipate, locate the DIP switch bank. Use a small screwdriver (provided) to move position 1 to "ON" as shown.

STEADY FLOW SELECTION

The Inline System is configured at the factory to ensure quick response to maintain constant pressure. In rare cases (as with a water line tap before the pressure tank), the unit may need to be adjusted to offer better control. If the unit is used on a system that has a water line tap before the pressure tank or where audible speed variations of the pump can be heard, adjusting the pressure control response time may be necessary. After enabling this feature, the installer should check flow changes for possible overshoot. A larger pressure tank and/or wider margin between regulation and valve pressure may be required as the steady flow feature reduces the controller's reaction time to sudden changes in flow.

If it is necessary to adjust the pressure control, remove power and allow the controller to discharge. Wait 5 minutes to allow internal voltage to dissipate, locate the DIP switch bank. Use a small screwdriver (provided) to move position 2 to "ON" as shown.

MAINTENANCE

LUBRICATION

WARNING



Hazardous voltage. Can shock, burn, or cause death.

Ground pump before connecting to power supply. Disconnect power before working on pump, motor or tank.

The pump requires only water for lubrication and must never be run dry.

WARNING Before disconnecting pump, be sure fuse box leads are disconnected or power is turned off. After reassembling the pump, refer to priming instructions before running.

WARNING Hazardous voltage can shock, burn or cause death. Disconnect power to pump before servicing unit.

DRAINING

NOTICE: Disconnecting the pump will not necessarily drain all other parts of the piping system. If there are any concerns with the proper procedure or necessity of draining the suction plumbing, contact a water systems professional.

All piping and water tanks exposed to freezing weather should be drained. If there are any concerns with the proper procedure to drain the system's pressure tank, contact the tank manufacturer for assistance.

REPLACEMENT PARTS

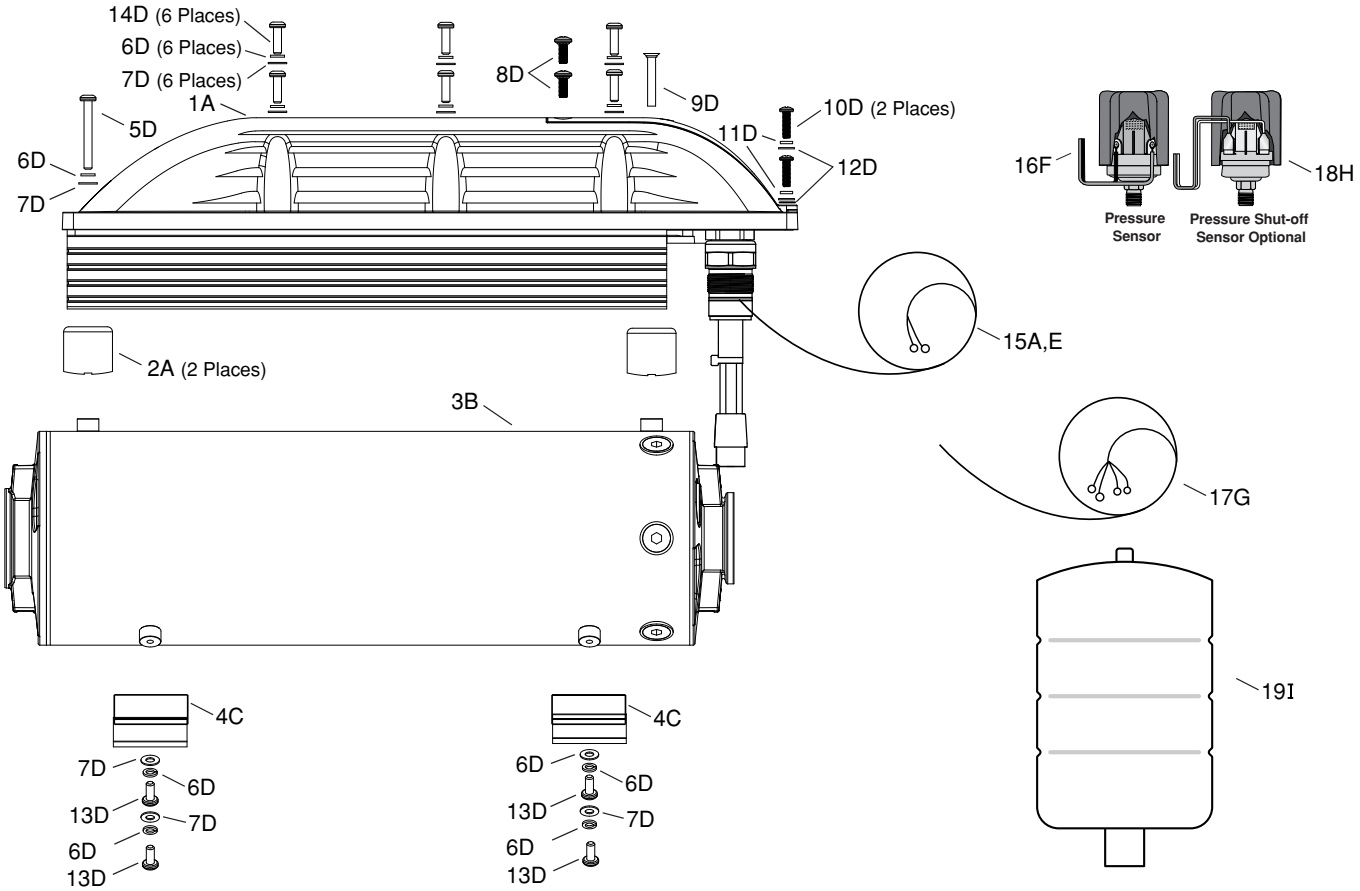

REPLACEMENT PARTS - CONTINUED

Spare Parts Kits for Inline 1100: FE			
Number	**Description**	**Kit Grouping Identifier**	**Repair Part Order Codes**
1	Drive Assembly	A*	305707901
2	Mounting Posts		
3	Pump Motor Assembly	B*	305707902
4	Mounting Feet	C*	305707903
5	#10-24x1.625 Pan Head Torx	D	305707904
6	#10 Lock Washer		
7	#10 Flat Washer		
8	#8-32x0.438 Pan Head Phillips Sealing		
9	#10-24x1.25 Flat Head Phillips Sealing		
10	#8-32x0.625 Pan Head Phillips		
11	#8 Lock Washer		
12	#8 Flat Washer		
13	#10-24x0.438 Pan Head Torx		
14	#10-24x0.625 Pan Head Torx		
15	Pressure Switch Cable (2 Wires)	A,E	305707905
16	Pressure Switch	F	305707906
17	Pressure Switch Cable (4 Wires)	G	305707908
18	Overpressure Switch	H	305707909
19	2 Gallon Pump Tank Kit	I	305707910

Spare Parts Kits for Inline 1100: LG			
Number	**Description**	**Kit Grouping Identifier**	**Repair Part Order Codes**
1	Drive Assembly	A*	305707907
2	Mounting Posts		
3	Pump Motor Assembly	B*	305707902
4	Mounting Feet	C*	305707903
5	#10-24x1.625 Pan Head Torx	D	305707904
6	#10 Lock Washer		
7	#10 Flat Washer		
8	#8-32x0.438 Pan Head Phillips Sealing		
9	#10-24x1.25 Flat Head Phillips Sealing		
10	#8-32x0.625 Pan Head Phillips		
11	#8 Lock Washer		
12	#8 Flat Washer		
13	#10-24x0.438 Pan Head Torx		
14	#10-24x0.625 Pan Head Torx		
15	Pressure Switch Cable (2 Wires)	A, E	305707905
16	Pressure Switch	F	305707906
17	Pressure Switch Cable (4 Wires)	G	305707908
18	Overpressure Switch	H	305707909
19	2 Gallon Pump Tank Kit	I	14942302

(1) * Item ships with fastener kit D

TROUBLESHOOTING

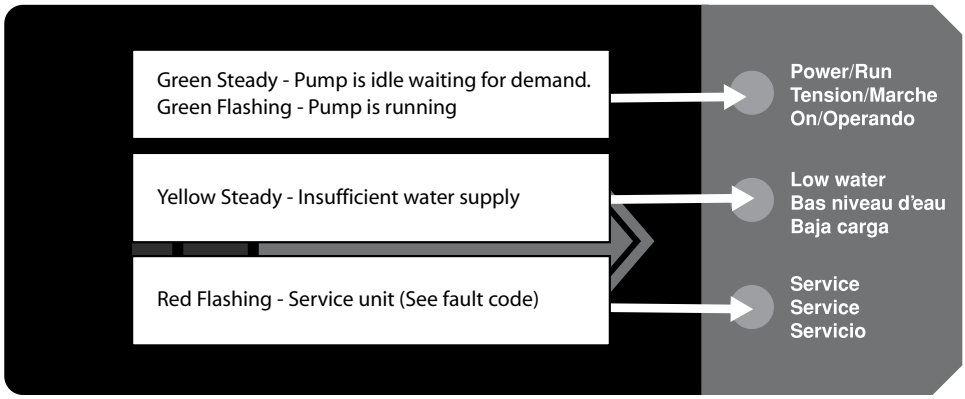

NUMBER OF FLASHES	FAULT	POSSIBLE CAUSES	CORRECTIVE ACTION
Yellow Light	MOTOR UNDERLOAD	No water Insufficient Water Vortex (Cistern application) Air/gas lock pump	The pump is running dry check water source. Restrict pump discharge to prevent cavitation. Raise minimum water level in cistern.
2	UNDERVOLTAGE	Low line voltage Misconnected input power leads	Line voltage is low, less than approximately 190 VAC. Check incoming power connections and correct or tighten if necessary.
3	LOCKED PUMP	Dragging motor and/or pump Abrasives or debris in pump	Check pump for external damage like a dent in the shell. Flush debris from pump and add input screen.
4	N/A		
5	OPEN MOTOR CIRCUIT	Loose motor connection	Wires to motor are open circuit. Check motor connection.
6	SHORT CIRCUIT	When fault is indicated immediately after power-up Short circuit due to defective cable motor or drive	Check motor connections. Replace drive or motor.
7	OVERHEATED DRIVE	High ambient temperature Improper ventilation Clogged heat sink	Ambient temperature has exceeded 104°F (40°C). Shield from direct sunlight. Ensure air temperature around drive does not exceed 104°F (40°C). Remove debris from heat sink fins.
8	OVER PRESSURE	Shut off sensor opened Water logged tank Pressure setting too close to shut off sensor pressure	Check for loose connections on the shut off sensor and drive terminal blocks. Check tank recharge. A water logged tank may cause a pressure spike that actuates the shut off sensor. Reduce system pressure setting to a value less than pressure shut off sensor.
RAPID	INTERNAL FAULT	A fault was found internal to drive	Contact a professional service provider.

APPENDIX 1 - INLINE SYSTEM PERFORMANCE CURVES

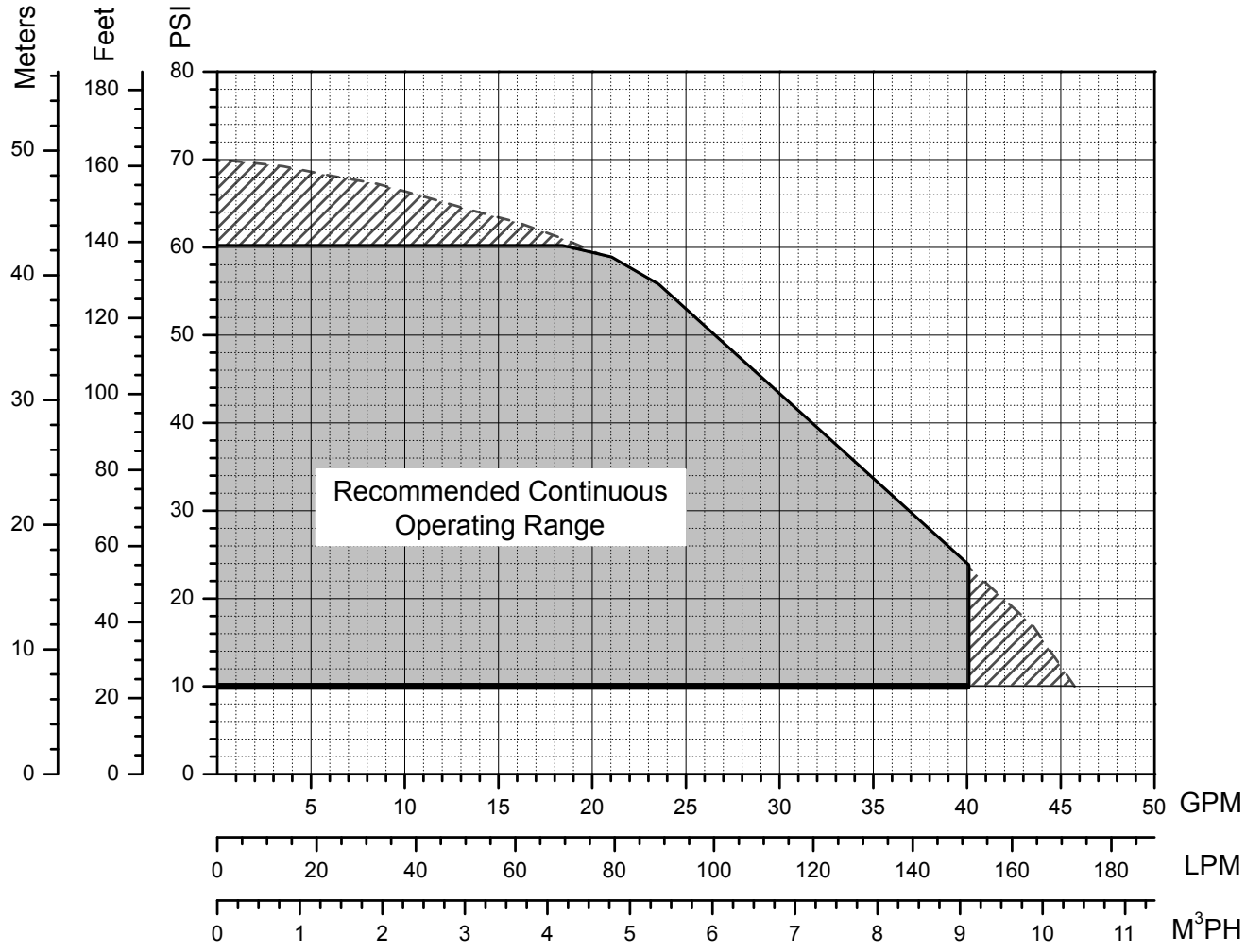

APPENDIX 2 - FRICTION LOSS TABLES

Note: Chart shows friction loss per 100’ of pipe. To convert to friction loss per foot, move decimal point two places to the left.

1"

Schedule 40 pipe 1.049 in. i.d. / Type L Copper tube 1.025 in. i.d.					
GPM	Velocity Ft/S	Friction Loss Ft Hd./100’ of pipe		Velocity Ft/S	Ft Hd./ 100’ Pipe Fric. Loss C=130
		Steel C=100	PVC C=140		
2.0	0.74	0.60	0.32	.078	0.41
3.0	1.11	1.26	0.68	1.17	0.87
4.0	1.49	2.14	1.15	1.56	1.48
5.0	1.86	3.24	1.75	1.95	2.23
6.0	2.23	4.54	2.45	2.34	3.13
8.0	2.97	7.73	4.16	3.11	5.35
10	3.71	11.7	6.31	3.89	8.08
12	4.46	16.4	8.85	4.67	11.3
14	5.20	21.8	11.8	5.45	15.0
16	5.94	27.9	15.1	6.22	19.2
18	6.68	34.7	18.7	7.00	23.9
20	7.43	42.1	22.8	7.78	29.0
25	9.29	63.6	34.6	9.74	43.9
30	11.1	89.2	48.1	11.7	61.4
40	14.9	152	82.0	15.5	105

1-1/4"

Schedule 40 pipe 1.380 in. i.d. / Type L Copper tube 1.265 in. i.d.					
GPM	Velocity Ft/S	Friction Loss Ft Hd./100’ of pipe		Velocity Ft /S	Ft Hd./ 100’ Pipe Fric. Loss C=130
		Steel C=100	PVC C=140		
4.0	0.86	0.56	0.30	1.02	0.52
6.0	1.29	1.20	0.65	1.53	1.12
8.0	1.72	2.04	1.10	2.04	1.92
10	2.15	3.08	1.67	2.55	2.90
12	2.57	4.31	2.33	3.06	4.04
14	2.00	5.73	3.10	3.57	5.35
16	3.43	7.34	3.96	4.08	6.85
18	3.86	9.13	4.93	4.59	8.52
20	4.29	11.1	6.00	5.10	10.4
25	5.36	16.8	9.06	6.38	15.7
30	6.43	23.5	12.7	7.65	22.1
40	8.58	40.0	21.6	10.2	37.6
50	10.7	60.4	32.6	12.8	56.7
60	12.9	84.7	45.6	15.3	79.5
80	17.2	144	77.9	20.4	136

1-1/2"

Schedule 40 pipe 1.610 in. i.d. / Type L Copper tube 1.505 in. i.d.					
GPM	Velocity Ft/S	Friction Loss Ft Hd./100’ of pipe		Velocity Ft/S	Ft Hd./ 100’ Pipe Fric. Loss C=130
		Steel C=100	PVC C=140		
6.0	0.95	0.57	0.31	1.08	0.49
8.0	1.26	0.96	0.52	1.44	0.82
10	1.58	1.45	0.79	1.80	1.24
12	1.89	2.04	1.10	2.16	1.73
15	2.36	2.95	1.59	2.70	2.62
20	3.15	5.24	2.83	3.60	4.46
25	3.94	7.90	4.26	4.51	6.74
30	4.73	11.1	6.00	5.41	9.44
40	6.30	18.9	10.2	7.21	16.1
50	7.88	28.5	15.4	9.01	24.3
60	9.46	40.0	21.6	10.8	34.1
70	11.0	53.2	28.7	12.6	45.5
80	12.6	68.1	36.8	14.4	58.1
90	14.2	84.7	45.7	16.2	72.1
100	15.8	103	56.6	18.0	87.7

2"

Schedule 40 pipe 2.067 in. i.d. / Type L Copper tube 1.985 in. i.d.					
GPM	Velocity Ft/S	Friction Loss Ft Hd./100’ of pipe		Velocity Ft/S	Ft Hd./ 100’ Pipe Fric. Loss C=130
		Steel C=100	PVC C=140		
10	0.96	0.43	0.23	1.07	0.35
15	1.44	0.92	0.50	1.60	.075
20	1.91	1.55	0.84	2.13	1.24
25	2.39	2.35	1.27	2.66	1.87
30	2.87	3.29	1.78	3.19	2.62
40	3.82	5.60	3.03	4.26	4.48
50	4.78	8.46	4.57	5.32	6.76
60	5.74	11.9	6.44	6.39	9.47
70	6.69	15.8	8.53	7.45	12.6
80	7.65	20.2	10.9	8.52	16.2
90	8.61	25.1	13.6	9.58	20.0
100	9.56	30.5	16.5	10.7	24.4
120	11.5	42.7	23.1	12.8	34.1
150	14.3	64.7	35.0	16.0	51.6
200	19.1	110	59.4	21.3	87.8

LIMITED WARRANTY*

THIS WARRANTY SETS FORTH THE COMPANY'S SOLE OBLIGATION AND PURCHASER'S EXCLUSIVE REMEDY FOR DEFECTIVE PRODUCT.

Franklin Electric Company, Inc. and its subsidiaries (hereafter "the Company") warrants that the products accompanied by this warranty are free from defects in material or workmanship of the Company.

The Company has the right to inspect any product returned under warranty to confirm that the product contains a defect in material or workmanship. The Company shall have the sole right to choose whether to repair or replace defective equipment, parts, or components.

The buyer should return the product to the place of purchase for warranty consideration. Subject to the terms and conditions listed below, the Company will repair or replace to the buyer any portion of this product which proves defective due to materials or workmanship of the Company.

The Company will consider products for warranty for 12 months from the date of installation or for 24 months from the date of manufacture, whichever occurs first.

The Company shall IN NO EVENT be responsible or liable for the cost of field labor or other charges incurred by any customer in removing and/or affixing any product, part or component thereof.

The Company reserves the right to change or improve its products or any portions thereof without being obligated to provide such change or improvement to previously sold products.

THIS WARRANTY DOES NOT APPLY TO products damaged by acts of God, including lightning, normal wear and tear, normal maintenance services and the parts used in connection with such service, or any other conditions beyond the control of the Company.

THIS WARRANTY WILL IMMEDIATELY VOID if any of the following conditions are found:

1. Product is used for purposes other than those for which it was designed and manufactured;
2. Product was not installed in accordance with applicable codes, ordinances and good trade practices;
3. Product was not installed by a Franklin Certified Contractor or Franklin Key Dealer; or
4. Product was damaged as a result of negligence, abuse, accident, misapplication, tampering, alteration, improper installation, operation, maintenance or storage, nor to an excess of recommended maximums as set forth in the product instructions.

NEITHER SELLER NOR THE COMPANY SHALL BE LIABLE FOR ANY INJURY, LOSS OR DAMAGE, DIRECT, INCIDENTAL OR CONSEQUENTIAL (INCLUDING, BUT NOT LIMITED TO, INCIDENTAL OR CONSEQUENTIAL DAMAGES FOR LOST PROFITS, LOST SALES, INJURY TO PERSON OR PROPERTY, OR ANY OTHER INCIDENTAL OR CONSEQUENTIAL LOSS), ARISING OUT OF THE USE OR THE INABILITY TO USE THE PRODUCT, AND THE BUYER AGREES THAT NO OTHER REMEDY SHALL BE AVAILABLE TO IT.

THE WARRANTY AND REMEDY DESCRIBED IN THIS LIMITED WARRANTY IS AN EXCLUSIVE WARRANTY AND REMEDY AND IS IN LIEU OF ANY OTHER WARRANTY OR REMEDY, EXPRESS OR IMPLIED, WHICH OTHER WARRANTIES AND REMEDIES ARE HEREBY EXPRESSLY EXCLUDED, INCLUDING BUT NOT LIMITED TO ANY IMPLIED WARRANTY OF MERCHANTABILITY OR FITNESS FOR A PARTICULAR PURPOSE, TO THE EXTENT EITHER APPLIES TO A PRODUCT SHALL BE LIMITED IN DURATION TO THE PERIODS OF THE EXPRESSED WARRANTIES GIVEN ABOVE.

DISCLAIMER: Any oral statements about the product made by the seller, the Company, the representatives or any other parties, do not constitute warranties, shall not be relied upon by the buyer, and are not part of the contract for sale. Seller's and the Company's only obligation, and buyer's only remedy, shall be the replacement and/or repair by the Company of the product as described above. Before using, the user shall determine the suitability of the product for his intended use, and user assumes all risk and liability whatsoever in connection therewith.

Some states and countries do not allow the exclusion or limitations on how long an implied warranty lasts or the exclusion or limitation of incidental or consequential damages, so the above exclusion or limitations may not apply to you. This warranty gives you specific legal rights, and you may also have other rights which vary from state to state and country to country.

*Contact Franklin Electric Co., Inc. Export Division for International Warranty.

Franklin Electric
400 East Spring Street, Bluffton, IN 46714
Tel: 260.824.2900 Fax: 260.824.2909
www.franklin-electric.com