F C C B B Q

by The Flying Culinary Circus

REGISTER THE BBQ FOR EXTENDED WARRANTY:

WATCH BBQ ASSEMBLY ON VIDEO HERE:

XGRILL™ ELITE



MANUAL

Installation, use, maintenance and safety



FCC-202249-30/ BG03-300A

! **OUTDOOR USE ONLY**

READ THE MANUAL, FOLLOW THE ASSEMBLY INSTRUCTIONS STEP BY STEP. GET TO KNOW YOUR GRILL AND THE SAFETY INSTRUCTIONS BEFORE USING THE APPLIANCE!

Share the fun of cooking!

Contents

Warnings 3

Technical Data 4

Read before assembly 5

Parts list 6

Exploded Drawing 7

Hardware 7

Assembly instructions 8

Moving the grill 15

Regulator and hose - Connecting the gas 16

Check for leaks before using the barbecue 17

Last check 18

Lighting instructions 19

Maintenance 20

Advice, tips and safety 22

Troubleshooting 23

Consumer Contact 24



⚠ WARNINGS!

- ACCESSIBLE PARTS OF THE GRILL BECOME VERY HOT DURING USE. KEEP CHILDREN AND OTHERS WHO NEED SUPERVISION AT A SAFE DISTANCE.
- THE GRILL IS INTENDED FOR OUTDOOR USE ONLY IN WELL-VENTILATED AREAS.
- LEAK TESTS (SEE PAGE 17) MUST ALWAYS BE CARRIED OUT BEFORE THE GRILL IS USED AND WHEN REPLACING THE GAS CYLINDER. ALSO PERFORM A LEAK TEST IF THE PRODUCT HAS NOT BEEN IN USE FOR A LONG TIME AND IN ADVANCE OF A NEW BARBECUE SEASON. ALWAYS CHECK THE GAS HOSE FOR DAMAGE AND CRACKS BEFORE USING THE BARBECUE.
- NEVER BARBECUE IN CLOSED ROOMS OR UNDER ROOFS, AS THIS MAY LEAD TO A LACK OF OXYGEN.
- FAILURE TO FOLLOW THE INSTRUCTIONS PROVIDED CAN IMPLY A RISK OF SERIOUS INJURY TO PERSONNEL AND FIXED INSTALLATIONS.
- REBUILDING / MODIFYING THE BARBECUE CAN CAUSE DANGER AND WILL INVALIDATE THE WARRANTY.
- ALWAYS SUPERVISE THE BARBECUE DURING USE AND KEEP SUITABLE EXTINGUISHING EQUIPMENT WITHIN REACH. THE GRILL SHOULD NOT BE OPERATED BY INTOXICATED PERSONS.
- THE BARBECUE MUST NOT BE USED IN PLACES THAT ARE BELOW NORMAL GROUND LEVEL. GAS CAN ACCUMULATE AND REPRESENT A DANGER OF EXPLOSION. GAS ACCUMULATION CAN ALSO CAUSE OXYGEN DEFICIENCY.
- THE BARBECUE MUST BE CLEANED REGULARLY AND THOROUGHLY TO PREVENT UNCONTROLLED GREASE FIRE. READ MORE ABOUT GREASE FIRE ON PAGE **20.**

ALSO READ PAGE **22** FOR MORE ADVICE AND TIPS ON GRILLING AND SAFETY.

Technical Data

Total Heat input: 8.2 kW
Gassforbruk: 547 gram/hour
Gascylinder (not included): Use standard cylinder approved for use in the Nordic Region. Even though butane and propane gas can be used, we recommend propane for use in the Nordic Region.
Approved hoses and regulators are available from most outlets selling gas equipment.

NB! Gas hoses used for this product must not exceed 120 cm in length.

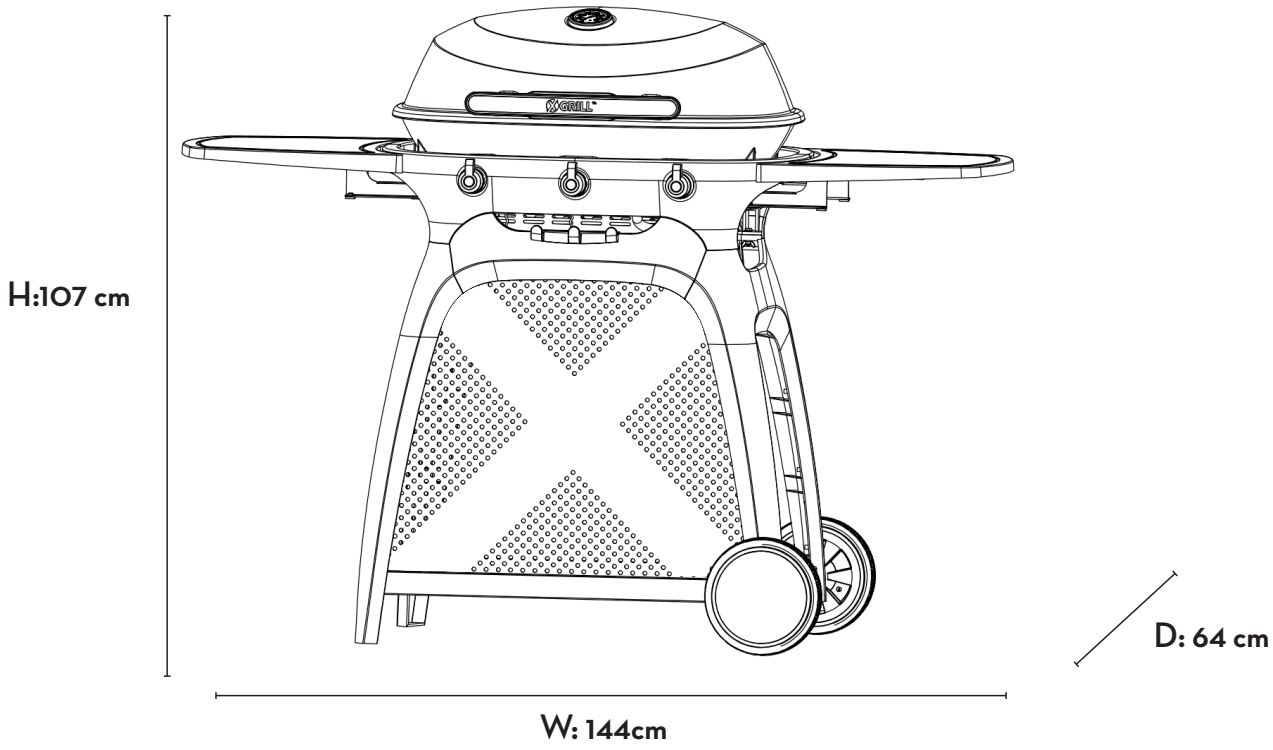

ONLY THE GAS TYPE AND GAS CATEGORY LISTED IN THE RATING LABEL IS TO BE USED ON YOUR APPLIANCE.

DESTINATION OF COUNTRIES TO USE	VALVE SIZE	GAS TYPE	GAS CATEGORY
LU,NL,DK,FI,SE, CY,CZ,EE,LT, LV,MT,SK,SI, BG,IS,NO,TR, HR,RO,IT,HU	0.75 mm	G30 (butan), G31(propan) and their mixtures, LPG 28~30 mbar	I3B/P(30)

CE 0063-21

The product is manufactured in accordance with European Gas Appliances Regulation (EU) 2016/426

FOLLOW THESE INSTRUCTIONS CAREFULLY TO AVOID SERIOUS PERSON INJURY OR DAMAGE TO YOUR BARBECUE.

Make sure that all parts and screws are included by comparing the parts list with the contents of the box. Also check that everything is undamaged before assembling the product.

If the grill is damaged during transport, do not assemble the grill before contacting your dealer or support@fccbbq.com.

Transport damage to parts, varnish or enamel must be reported to the dealer or FCC BBQ before mounting and using the grill. If damage is reported after, there is a possibility that damage may have occurred during assembly. This will not be considered as transport damage.

Please note that some parts may be located in the Styrofoam to protect the part during transport. If parts are missing, first check the packaging carefully.

Remove all remnants of packaging material and any plastic foil from the grill before using the grill.



- FOLLOW THE ORDER IN THIS MANUAL TO AVOID INCORRECT ASSEMBLY. PARTS OF THE ASSEMBLY WILL REQUIRE HEAVY LIFTING WHICH SHOULD BE PERFORMED BY TWO PEOPLE TOGETHER, TO AVOID PERSONAL INJURY AND DAMAGE TO THE GRILL. SOME METAL PARTS MAY BE SHARP, WEAR PROTECTIVE GLOVES.
- POWER TOOLS SHOULD NOT BE USED TO ASSEMBLE THE GRILL. TOOLS WITH TOO MUCH FORCE CAN DAMAGE THE SURFACE TREATMENT ON SCREWS, DAMAGE ENAMELLED / LACQUERED PARTS OF THE GRILL, AS WELL AS LOOSEN PRE-ASSEMBLED NUTS.
- IF THE PRODUCT'S VARNISH OR ENAMEL IS DAMAGED DURING ASSEMBLY, WE RECOMMEND THAT THE DAMAGE BE TREATED IMMEDIATELY TO AVOID LATER RUST DAMAGE. SUITABLE HEAT-RESISTANT VARNISH CAN BE ORDERED FROM SUPPORT@FCCBBQ.COM.

Parts List

CODE	DESCRIPTION	QTY
1	HANDLE	1
2	BAKELITE HEAT SHIELD	2
3	THERMOMETER	1
4	THERMOMETER BASE	1
5	RIGHT GRILL	1
6	LEFT GRILL	1
7	MIDDLE GRILL	1
8	LEFT BURNER	1
9	MID BURNER	1
10	THE FIRE TANK	2
11	RIGHT BURNER	1
12	COLLECTOR BOX	3
13	RIGHT SUPPORT SIDE TABLE	2
14	LEFT SUPPORT SIDE TABLE	2
15	FURNACE BODY	1
16	SIDE TABLE	2
17	CONNECTING PLATE ASSEMBLY	2
18	KNOB BASE	3
19	VALVE PIPE ASSEMBLY	1
20	OIL DRIP PAN	1
21	IGNITION	3
22	CROSS BEAM	2
23	KNOB	3
24	HOOK	1
25	RIGHT SIDE PLATE	1
26	BASE PLATE	1
27	LEFT SIDE PLATE	1
28	FRONT PLATE	1
29	WHEEL COVER	1
30	AXLE	1
31	WHEEL	2

Exploded Drawing

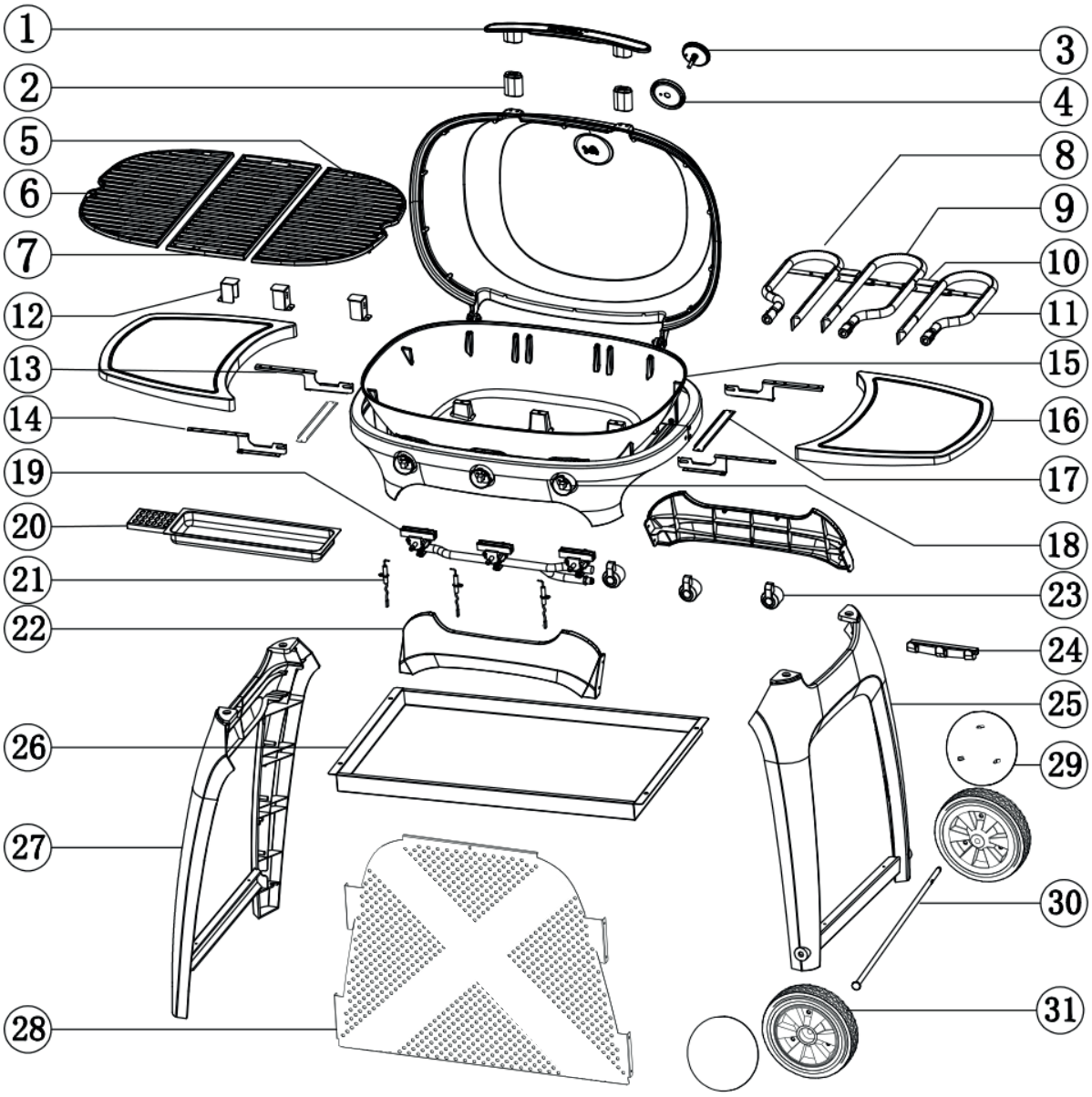

HARDWARE					
CODE	DESCRIPTION	QTY	CODE	DESCRIPTION	QTY
A	ST4.2x10 Screw	46	H	M6 Butterfly Nut	4
B	M6 Washer	4	I	M4x8 Screw	4
C	M5x65 Screw	4	J	M8 Locking Nut	1
D	M5 Spring Washer	4	K	M8 Washer	1
F	M5 Washer	4	L	Hexagonal Wrench	1
G	M6x25 Screw	4	M	Wrench	2

25 1PC
26 1PC
27 1PC
A 4PCS

1.

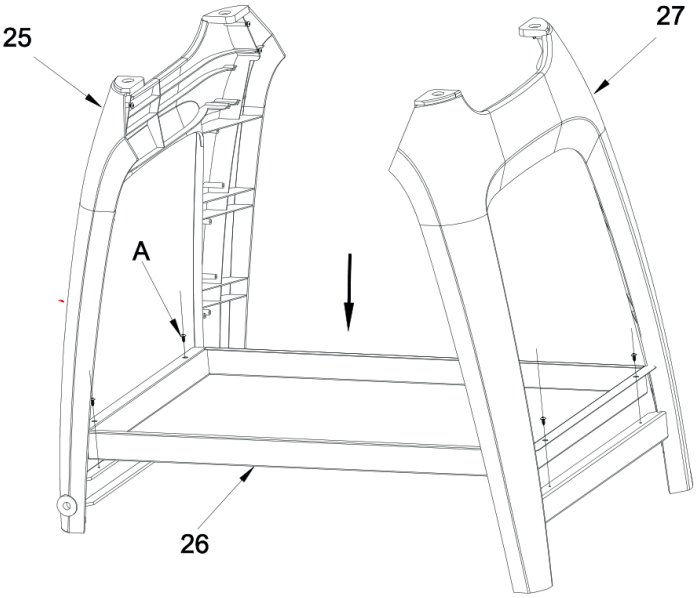

1. Fix the left and right side panels (25) (27) of the frame to the left and right sides of the frame bottom plate (26) with screws A.

22 1PC
A 4PCS

2.

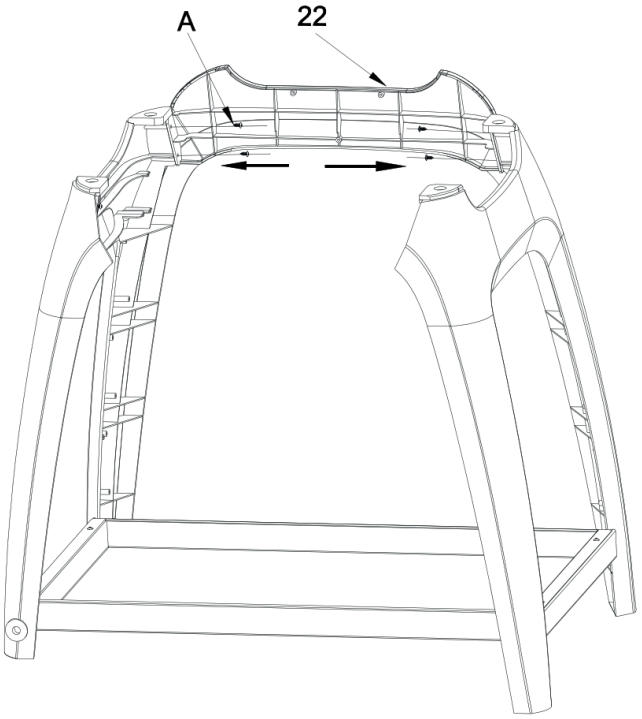

2. Fix the frame front cross (22) to the left and right side panels of the frame with screws A as shown.

3.

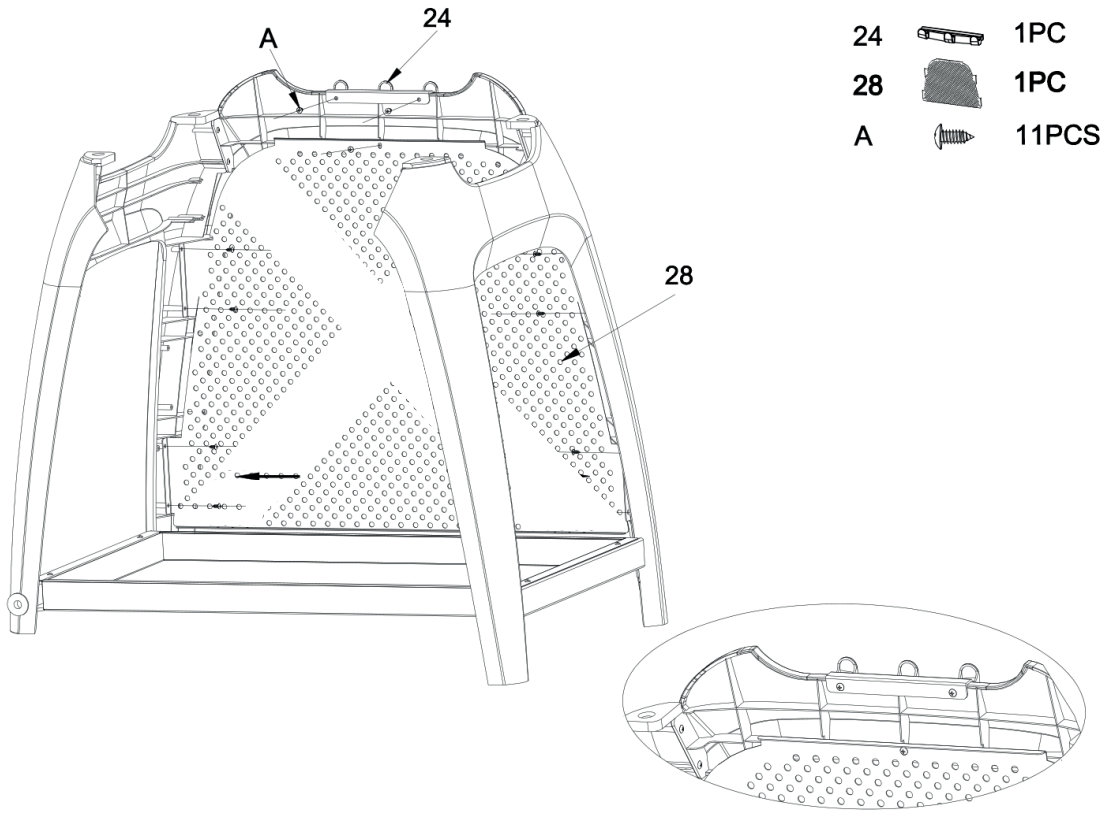

24		1PC
28		1PC
A		11PCS

3. Fix the front panel (28) of the frame to the left and right side panels with screws A, and fix the tool hook (24) to the front cross of the frame also with screws A.

4.

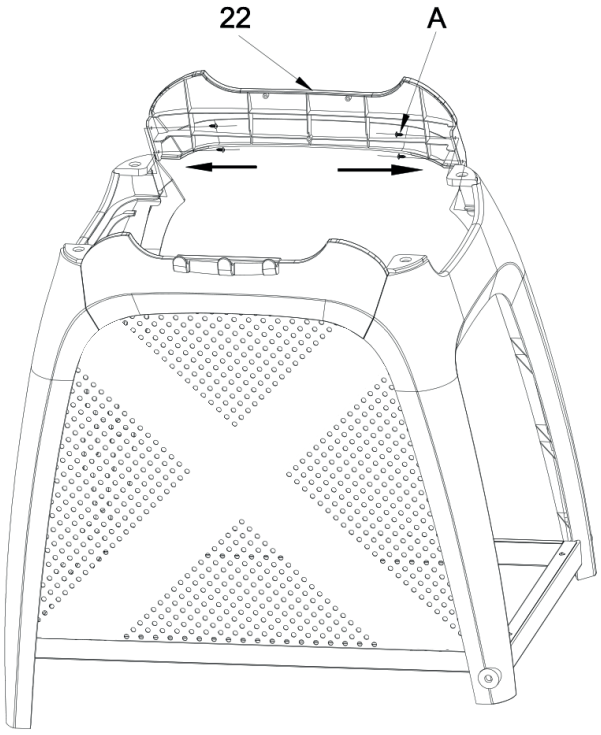

22		1PC
A		4PCS

4. Fix the frame front cross (22) with the screw A on the other side of the frame.

5.

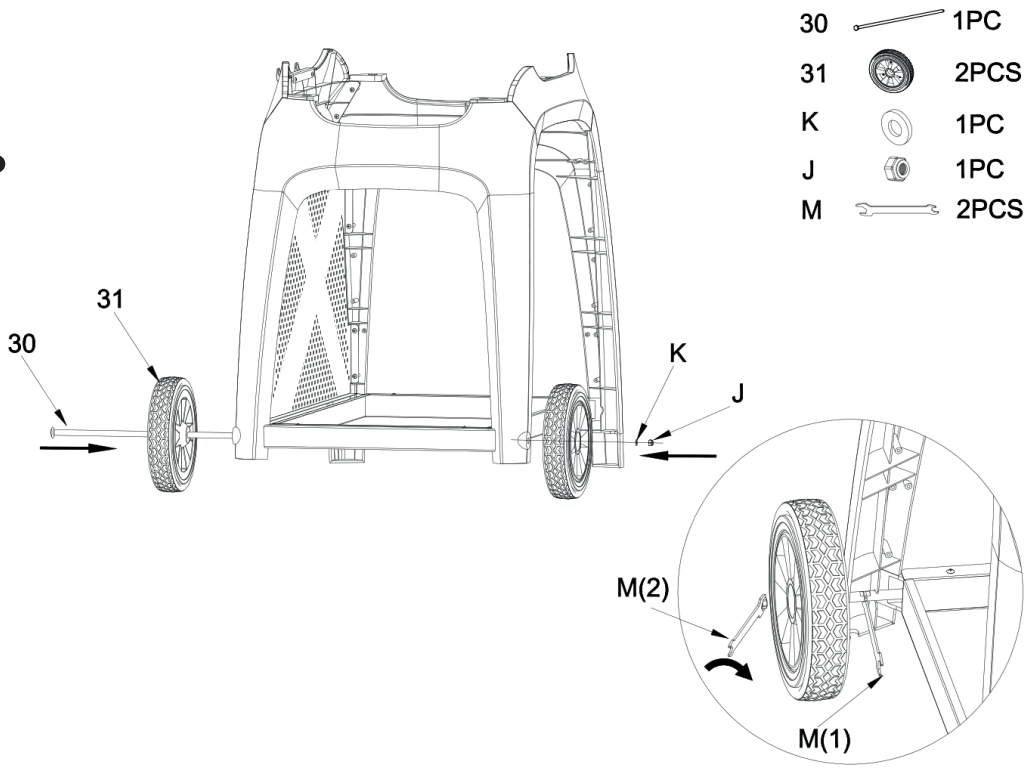

5. Pass the wheel axle (30) through the wheel (31) and the right side of the frame, and fix it with K, J. (As shown in the figure, use the hex wrench M1 to fix the wheel axle at the card slot and clamp it with M2. Turn it to the left to lock it).

6.

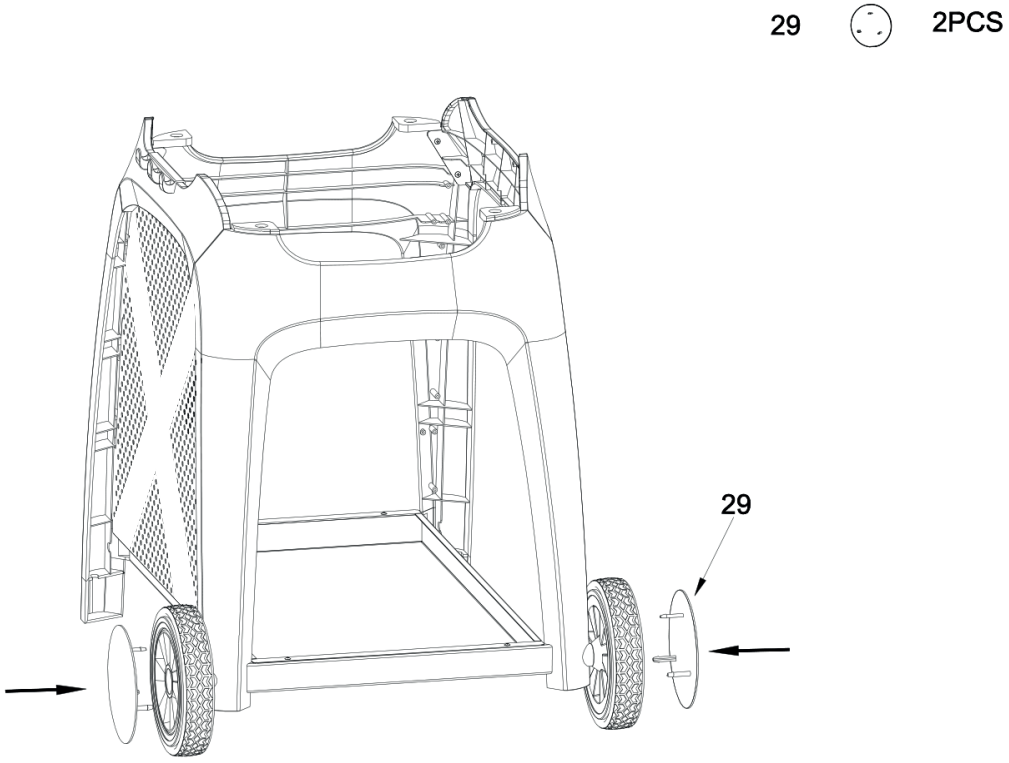

6. Fasten the wheel cover (29) into the wheel as shown.

7.

NOTE!
TWO PERSONS IS RECOMMENDED WHEN LIFTING THE STOVE BODY.

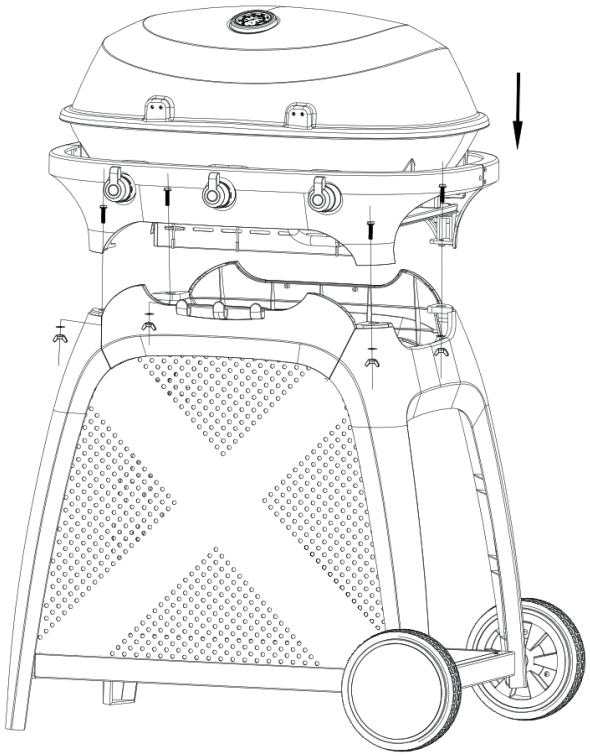

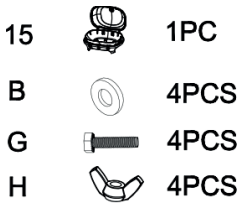

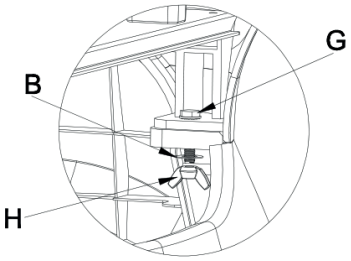

7. Place the frame assembly (15) on the frame as shown and secure it with B,G and H.

8.

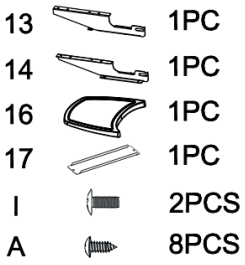

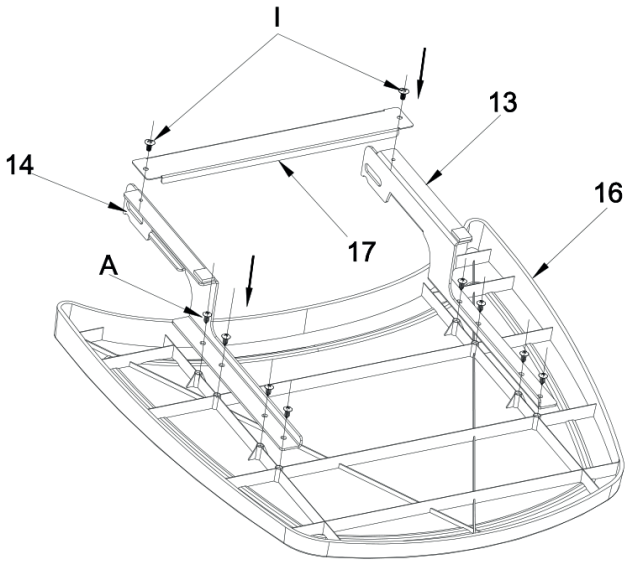

8. Fix the side plate bracket (13) (14) to the side plate (16) with the screw A as shown in the figure, and fix the side plate connecting plate (17) to the (13) (14) with the screw I.

9.

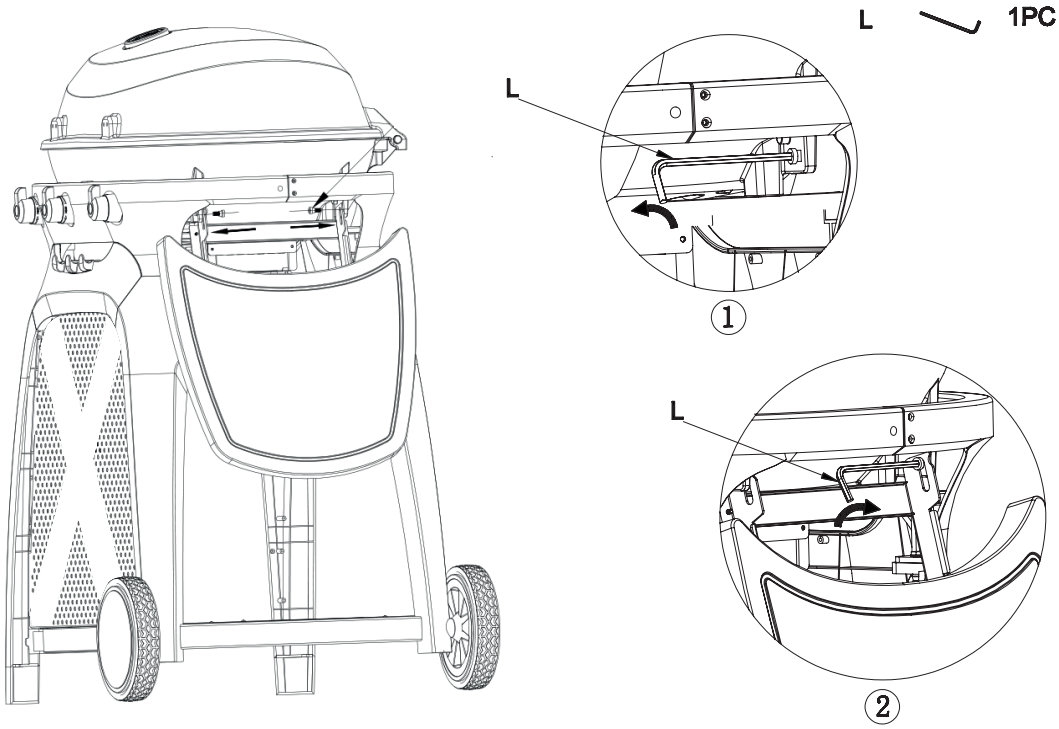

9. 1. Loosen the pre-assembled screws with the Allen key.
2. Carefully attach the side table to the left and right sides of the grill body (use Allen key to lock the screw).

10.

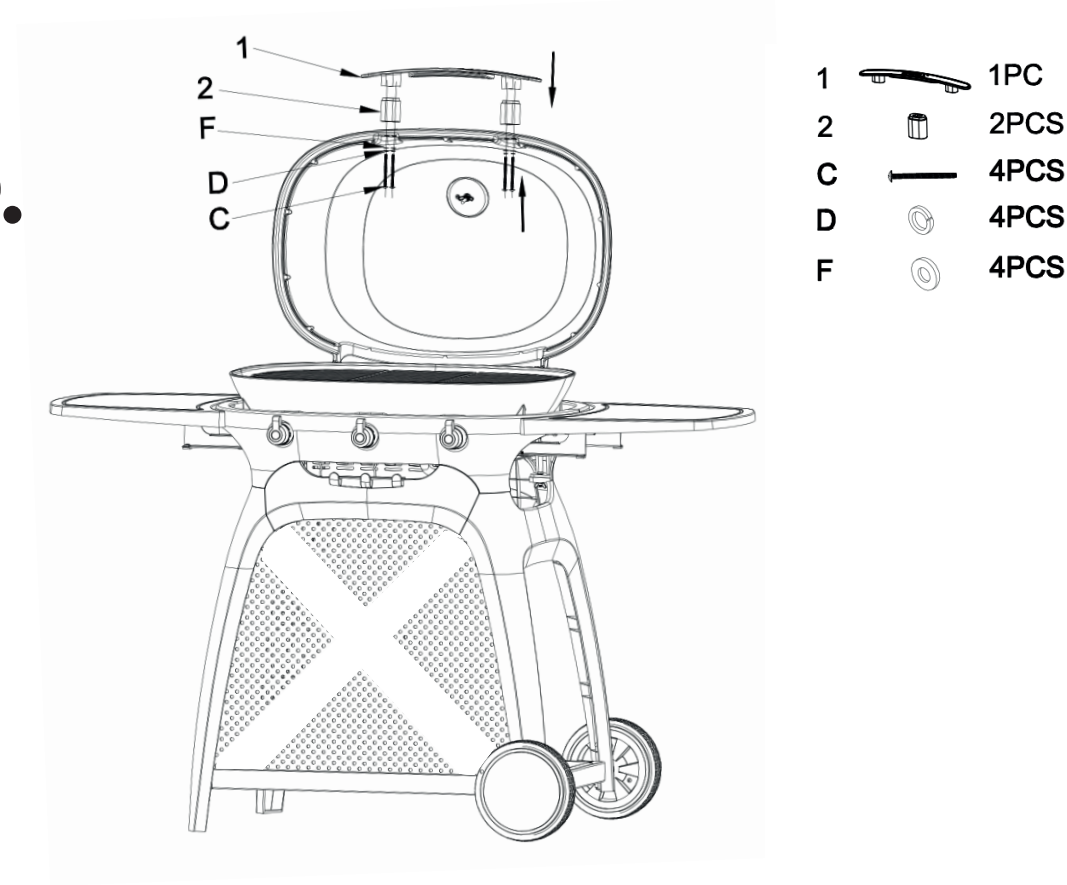

10. Fix the handle (1) and the handle insulation pad (2) on the lid using C,D and F.

5 1PC
6 1PC
7 1PC

11.

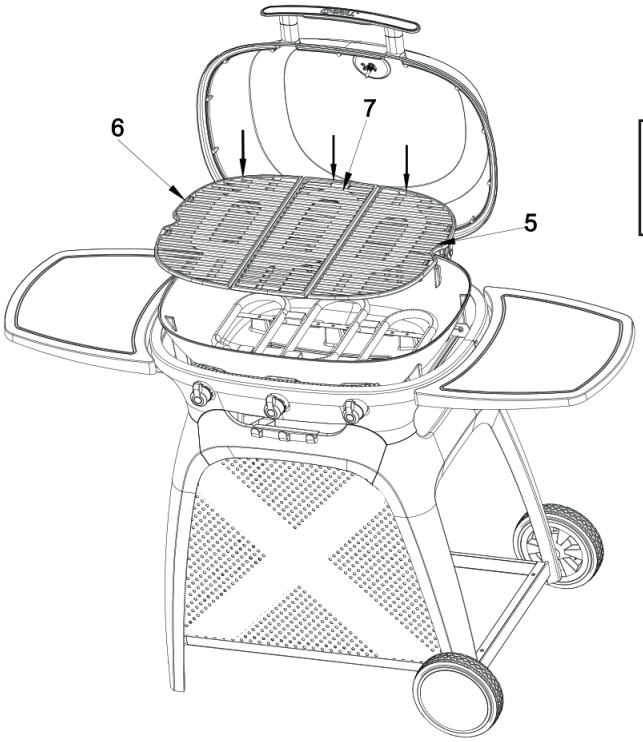

NOTE! The pattern on the grill surface may vary and does not necessarily match the drawings.

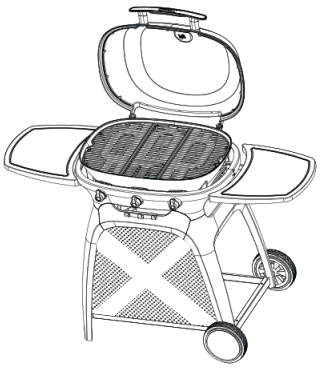

11. Place the grilling net (7) in the left grilling net (6) on the right grilling net (5) on the furnace body as shown in the figure.

20 1PC

12.

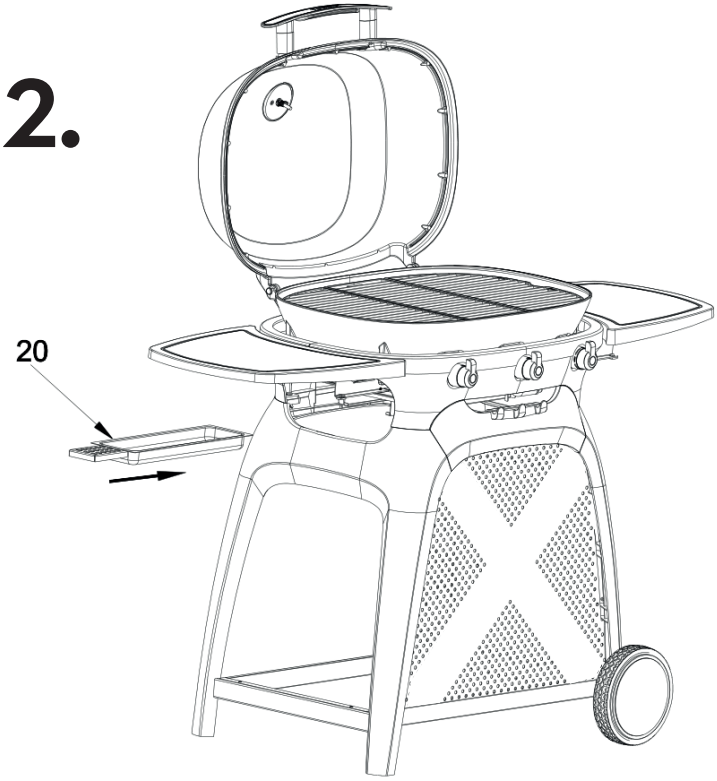

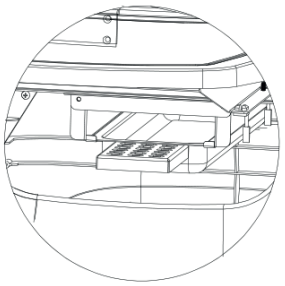

12. Place the oil drip pan (20) under the furnace.

13.

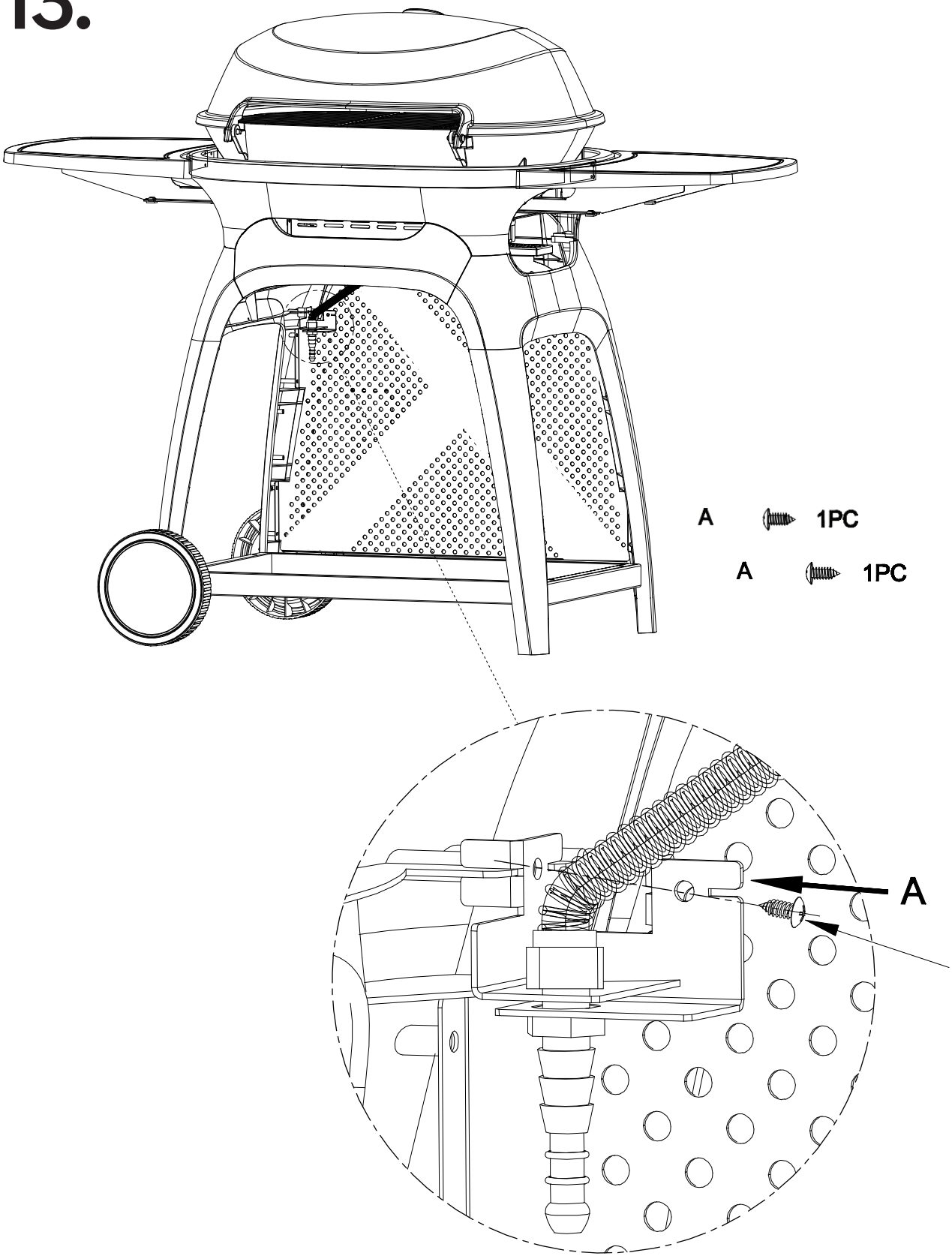

13. Use screw (A) to fix the bracket that secures the gas intake connector.

Moving the grill

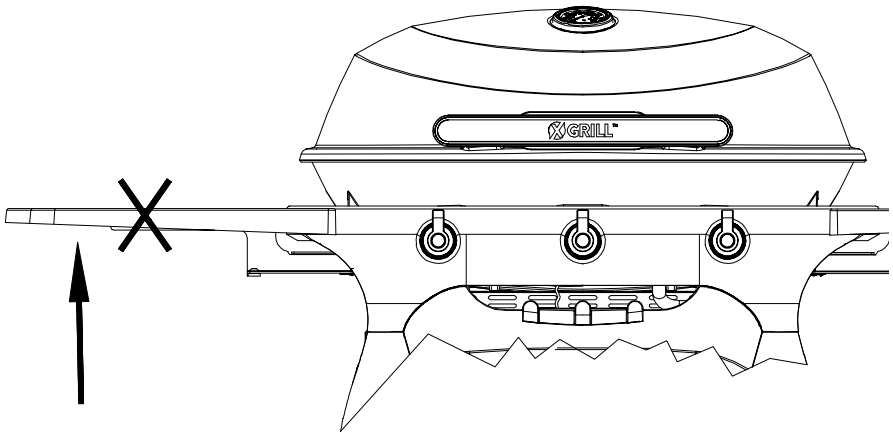

IMPORTANT!

NEVER MOVE THE GRILL BY HOLDING THE SIDE TABLE!

To move the grill correctly, do the following:

① Gently lift the edge of the side table 45 degrees.
② Gently pull the side table to the edge about 20mm.
③ Gently lower the side table and attach it to the side panel of the frame

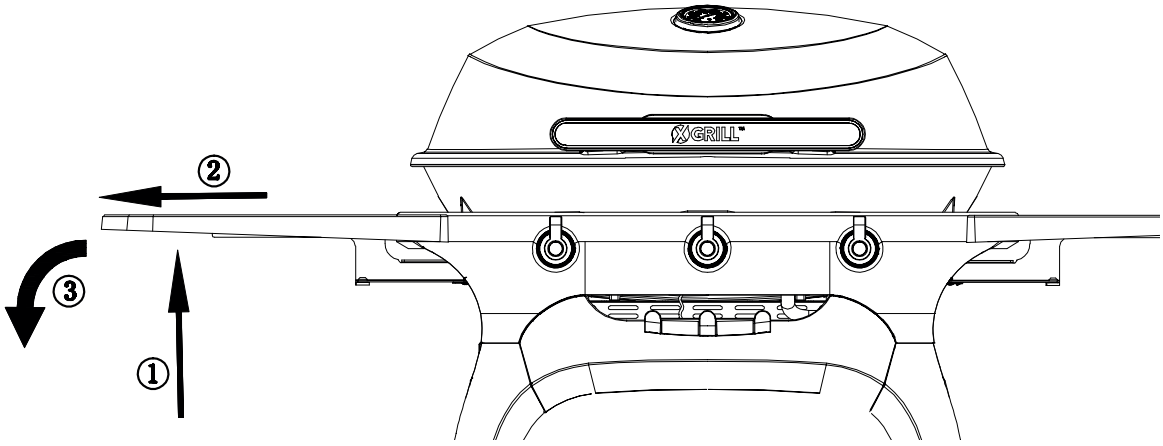

④ Grasp the joint between the front and rear plates of the furnace body with both hands and lift it up to push the grill.
Always fold the side table before lifting to move the grill.

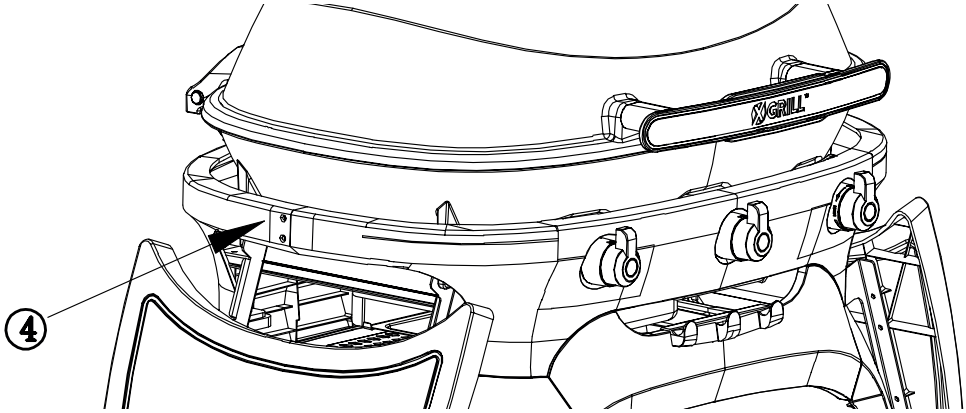

FOLLOW THESE INSTRUCTIONS CAREFULLY TO AVOID SERIOUS DAMAGE TO YOUR BBQ AND CAUSE PERSONAL INJURY.

HOSE

- Connect the gas hose to the gas inlet on the grill. Tighten well.
- Install the regulator and hose. Follow the installation instructions that came with the controller set.
- Do not use sealing tape, glue or liquid on the connection.
- Gas hoses used for this product must not be longer than 120 cm.
- Check the gas hose regularly for cracks, damage and rot. Never use a damaged gas hose.

REGULATOR

- Check that all controls on the control panel are in the OFF position before connecting the regulator to the gas cylinder.
- Connect the regulator to the gas cylinder according to your regulator and the cylinder dealer's instructions.
- We recommend propane gas for use in the Nordic countries, but butane can also be used. Butane is poorly suited for low temperatures.
- Check that the regulator is not damaged.
- Check that the gas cylinder is on a firm, level surface and is lower than the gas inlet on the grill.
- Use an approved gas cylinder that fits the regulator.
  Cylinders of 10 kg or more are recommended.

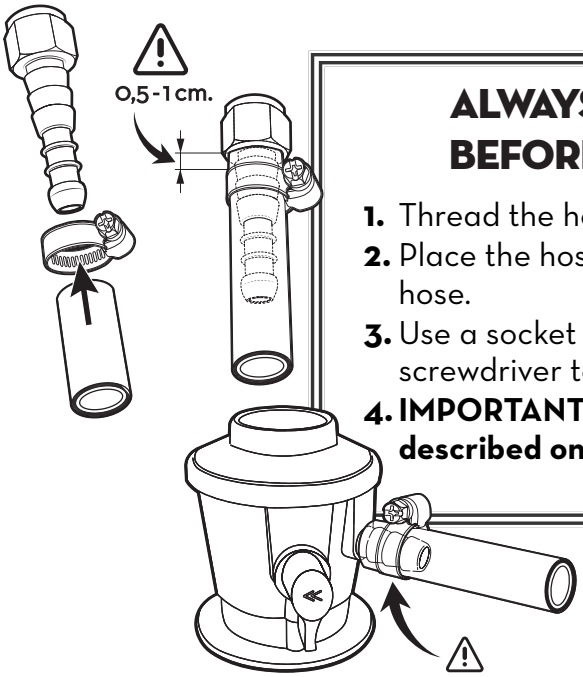

ALWAYS PERFORM A LEAK TEST BEFORE USING THE BARBECUE!

1. Thread the hose all the way into the gas nipple.
2. Place the hose clamp 0.5 - 1 cm from the end of the hose.
3. Use a socket wrench (size 7), wrench (size 7) or screwdriver to tighten the hose clamp and tighten well.
4. **IMPORTANT! A gas leak test must be performed as described on next page before using the barbecue.**

BEFORE USING THE BARBECUE, A LEAK TEST MUST BE CARRIED OUT!

Never check for leaks by using an open flame, use a leak spray or alternatively a soapy water mixture (two parts dishwashing soap and one part water).



1. Extinguish all live flames, heat sources and cigarettes in the area where the leak test is to be performed..
2. Turn all controls on the grill to the OFF position.
3. Set the regulator to the OFF position and connect it to the gas tank.
4. Spray the leaking spray (or brush the soap mixture) on all joints and connections on the gas cylinder, regulator, the entire hose and all valves on the barbecue.
5. Open the gas supply on the regulator and carefully check for bubbles in any of the places where the spray mixture is applied.
6. **IF BUBBLES OCCUR, CLOSE THE GAS SUPPLY AND TIGHTEN ALL CONNECTIONS / JOINTS. THEN DO A NEW TEST. THE BARBECUE MUST NOT BE USED UNTIL YOU ARE SURE THERE ARE NO LEAKS. GAS LEAK CAN CAUSE UNCONTROLLED FIRE WHICH MAY INJURY PERSONS, FIXED INSTALLATIONS AND YOUR BARBECUE.**

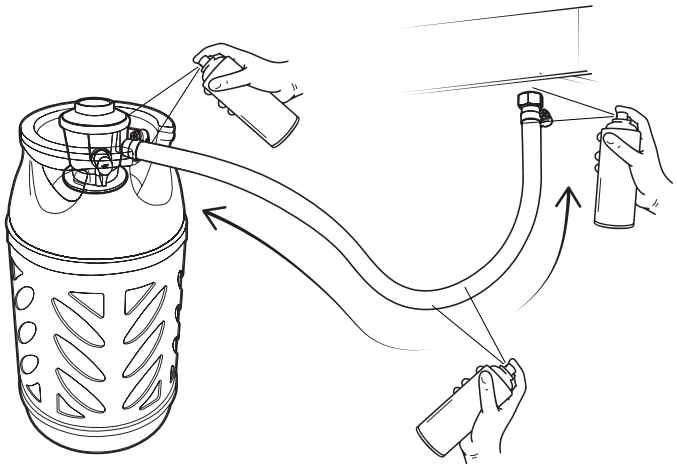

7. If detected leakage cannot be rectified, do not attempt to cure leakage but consult your dealer or FCC BBQ Products support at support@fccbbq.com for help in solving the problem.

- LEAK TEST MUST BE DONE REGULARLY AND EVERY TIME THE GAS CYLINDER, REGULATOR OR HOSE IS REPLACED.
- ALSO TEST BEFORE NEW BARBECUE SEASON AND IF THE BARBECUE HAS NOT BEEN USEDFOR A WHILE.

PLACEMENT OF THE BBQ

- Ensure that the grill is placed at least 150cm in all directions from house walls, trees, plants and other flammable materials or liquids when in use.
- Do not place the grill under a roof or overhang.
- Make sure that the barbecue is placed in a wellventilated place to avoid carbon monoxide poisoning.
- The barbecue must not be used below normal ground level, as this can lead to an explosion hazard and a risk of lack of oxygen.



FINAL CHECK

- Check that all control knobs work normally.
- Check that the gas hose is free of cracks and damage (it should always be done before using the BBQ).
- Check that the gas cylinder and hose do not come into contact with hot objects.

GOOD ADVICE

- **KEEP THE BBQ CLEAN.** A clean barbecue gives better effect, less smoke, less irregular flames and reduces the risk of fat burning.
- **PREHEAT THE GRILL** for 10-15 minutes at maximum temperature. After preheating, adjust the controls according to the type of grilling and the desired grilling result. Using too much heat can result in burnt and overcooked food.

LIGHTING INSTRUCTIONS

1. Make sure all switches are in the "OFF" position (red line points upwards).
2. Open the lid. The lid must always be open when the grill is lit.
3. Open the gas from the gas cylinder with the regulator.
4. Push in the switch until the desired burner enters and turn it to the left. The burner lights up automatically.
5. When the burner is lit, the next burner can be lit in the same way. Light the remaining burners as needed.

TIP: Preheat the grill for about 10-15 minutes at maximum temperature. After heating, adjust the burners to the desired performance in relation to what is to be grilled.

If the burners do not light up after 5 seconds, put all the switches in the "OFF" position and close the regulator on the gas cylinder.

Wait for 5 minutes. Repeat the procedure above.

MANUAL LIGHTING

If the built-in igniter does not work or if you want to light the grill manually using a long match or a long lighter.

Do not lean over the grill while lighting!

1. Make sure all switches are in the "OFF" position (red line points upwards).
2. Open the lid. The lid must always be open when the grill is lit.
3. Open the gas from the gas cylinder with the regulator.
4. Light a long match and put it in the ignition hole on the left or right side of the grill grate.
5. Push the burner switch closest to the ignition hole and turn the switch to the left.
6. Make sure the burner ignites and stays lit.
7. Adjacent burners can be ignited by sliding the switch and turning it to the left.

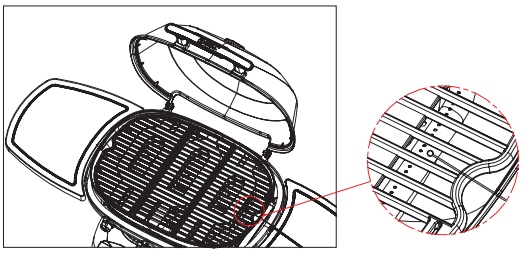

If the burners do not light up after 5 seconds, put all the switches in the "OFF" position and close the regulator on the gas cylinder.

Wait for 5 minutes. Repeat the procedure above.

- IF THE BURNER DOES NOT IGNITE, TURN THE SWITCHES TO THE OFF POSITION (CLOSE THE GAS SUPPLY) AND WAIT 5 MINUTES BEFORE TRYING TO IGNITE AGAIN.
- IF THE GRILL STILL DOES NOT LIGHT WITH NORMAL OR MANUAL METHOD, READ THE TROUBLESHOOTING TABLE OR CONTACT YOUR DEALER.

KEEP THE FIREBOX, COOKING GRATE AND ACCESSORIES CLEAN TO AVOID GREASE FIRES.

IF A GREASE FIRE OCCUR

In case of grease fire, if possible close the gas supply on the regulator / barbecue and disconnectthe regulator. In the event of a minor grease fire,wait until the fire goes out on its own. In the eventof a major grease fire, use a suitable extinguishing agent (CO_2 appliance, fire blanket, etc.) and tryto suffocate the fire. NB! NEVER USE WATER TO EXTINGUISH A GREASE FIRE.

> **!** NB: DO NOT USE WATER TO EXTINGUISH GREASE FIRE!
> CLEAN THE GRILL REGULARLY TO AVOID GREASE FIRES.

HOW TO AVOID GREASE FIRE

Check the grease cup (20) after each grilling and clean regularly with a nylon brush and dishwashing detergent. How often it will be necessary to clean will depend on how much and type of food is grilled. To simplify cleaning we recommend adding cat litter and/or aluminum foil on the drip tray.

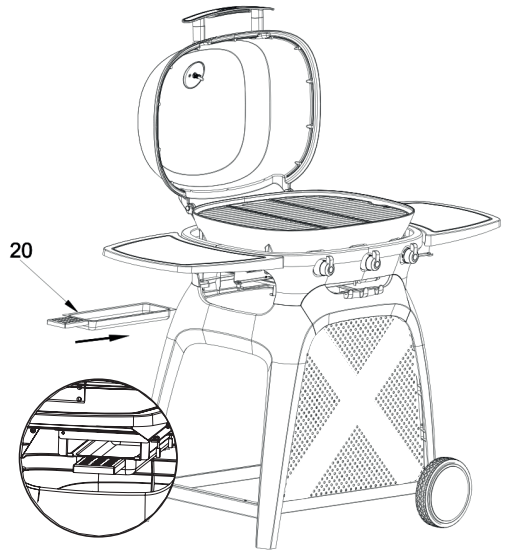

Clean the grill grate after grilling with a grill brush and, if necessary, with soap and water. In case of visible accumulation of grease and food residue in the firebox, remove these with a plastic scraper or using a nylon brush, water and dish soap.
During preheating, check that there are no signs of irregular flames. When grilling foods with much fat or oil, pay extra attention. Feel free to use trays in aluminum foil to prevent large amounts from running down on the grease cup. Do not leave the barbecue when it is lit and close the gas supply as soon as possible if there is a sign of a grease fire.

MAINTENANCE OF THE BARBECUE

- Check regularly that the burners are burning correctly.
- Remove the grill grates.
- Light the barbecue in the normal way.
- Turn the control from low to high. Check if there is a difference in strength, and that the flame is clear and blue. The flame should not be orange.
  If the burner behaves abnormally, read the troubleshooting table.
- Remove grease and old food debris on the burners with a nylon brush and check that no holes in the burner are clogged.

MAINTENANCE OF THE BURNERS

1. All controls must be in OFF mode. Check that the gas supply is switched off and the regulator is disconnected from the gas cylinder.
2. Remove the cooking grate and drip cup.
3. Remove the screws on the burner, use a screwdriver.
4. Carefully lift the burners out of the valve outlet.
5. Use a nylon brush to clean the outside of the burner.
6. Clean blocked passages / channels by using a metal string or e.g. bending a paper clip.
7. Check that insects, cobwebs etc. do not block the inside of the burner. In that case, remove this.
8. Check if the burner is damaged. Small holes and corrosion can occur with normal use of the grill. Are there cracks or holes, the burner should be replaced with a new one.
9. After cleaning, place the burner in place and screw it on.
10. Replace grease cup and grill grate.

CLEANING

All cleaning and maintenance must be performed when the barbecue is cold. Make sure that the gas upply is switched OFF and the regulator is disconnected from the gas cylinder.
Use a mixture of dishwashing detergent and water, or use a separate grill cleaner with a nylon scrubbing brush / scouring sponge on the inside of the lid and in the inner grill body itself. Rinse well and allow to air dry completely. Do not use caustic soda, alcoholic or abrasive detergents. This can damage the barbecue and cause a fire. Cast iron cooking grate and grease cup must not be cleaned in a dishwasher.

PLASTIC PARTS

Use only clean water and any mild detergents. Wipe with a clean cloth.

PAINTED PARTS AND PARTS IN STAINLESS STEEL

Chassis, front panel, side table, etc. that are produced in lacquered steel or stainless steel can rust in the event of lack of maintenance / cleaning.
To maintain the grill's beautiful design and surface, it is recommended to use mild non-abrasive cleaners and hot water. Wipe the surface with a non-abrasive cloth. Varnished surfaces are treated with car wax and stainless steel parts are treated with a thin layer of acid-free oil once or twice a year.
For barbecues that are placed in coastal areas, we recommend that you treat the grill more often.

COOKING GRATE

Grill grate and are brushed regularly with a grill brush for rough cleaning. The grill grate can be soaked in mild soapy water. For difficult, burnt stains, use a non-abrasive cleaner. Rinse well with water and dry well.
NB! The grill grate must be completely dry before they are placed back in the barnecue. For main cleaning before storing the barbecue for a longer period, feel free to insert the grill grate with a thin layer of cooking oil.

INSECTS AND VERMIN

After long-term storage, insects and other vermin can be found in the BBQ. If you experience problems with lighting or irregular flames, it can be due to unwanted guests blocking the gas supply. In such instances, dismantle and clean the burners. Replace the burnerswhen they are dry.

- **Disassemble the burners and clean them if pests are suspected in the grill. Refit the burners when they are completely dry.**
- **Check that the gas hose is not cracked or damaged by mice or rats.**

! FIRES CAUSED BY FAT, DAMAGE THE METAL, PAINT AND ENAMEL. DAMAGE TO THE BARBECUE CAUSED BY FAT BURNING, IS NOT COVERED BY THE GUARANTEE AS IT IS DUE TO INCORRECT USE.

SAFETY AND INFORMATION

- **The gas cylinder should always be placed next to the grill when in use.**
- **Close the gas supply on the regulator when the grill is not in use and when storing the gas cylinder under the barbecue, disconnect the regulator.**
- **If the barbecue is stored in a garage or basement below ground level, the gas cylinder should not be stored in the same place.**
- **THIS PRODUCT IS INTENDED FOR USE IN PRIVATE HOUSEHOLDS AND IS NOT SUITABLE FOR PROFESSIONAL USE IN A RESTAURANT OR SIMILAR.**
- **Coatings should not be applied until the grill is completely cold and dry. Moisture on the inside of the cover will cause large formations of surface rust for those of the grill parts which are in painted steel and stainless steel..**
- **PARTS IN PLASTIC WILL BE ABLE TO BLEACH UNDER THE INFLUENCE OF SUNLIGHT.**
- **LACQUERED PARTS WILL BE ABLE TO WHITE WITH THE EFFECT OF SUNLIGHT.**

ADVICE AND TIPS

- Always preheat the grill for 10-15 minutes before starting to grill. Then the cast iron grates are taken up and distributed evenly over the grill surface.
- Outdoor temperature, wind, snow and rain can give a deviation of up to 30% on the temperature shown in the thermometer and the temperature that is actually on the grill surface.
- Avoid placing food all the way to the edge (approx. 1.5 cm) on the grill grate. Grease that runs down the side walls of the grill room will be able to drip onto the surface.
- Make sure that the grill is on a stable and straight surface to prevent grease from leaking out of the grease collection system.
- To facilitate cleaning of grease trays, cat litter can be used to absorb grease.
- Make sure that the grill is stored dry under a roof or under a cover. Water from snow, ice and rain that enters the grill can overfill the grease collection system and cause leakage to the surface.
- We recommend the use of FCC BBQ original covers for the best possible protection against rain, pollen and pollution. Remember that the grill must be completely dry and cold before applying the coating. The coating is equally waterproof both ways and moisture on the inside can cause major rust damwage on painted and stainless steel surfaces.

PROBLEM	POSSIBLE CAUSE	SOLUTION
BURNER WILL NOT LIGHT	Empty gas cylinder	Replace gas cylinder
	Damaged regulator	Check/replace the regulator
	Burner is blocked	Clean the burner
	Gas supply is blocked	Clean gas ventury or hose
	Electrode is broken or dirty	Clean the electrode
	Windy conditions	Place the BBQ in a less exposed position.
	Ignition wire is damaged or fitted incorrectly	Make sure wire is mounted correctly
LOW FLAME	Empty gas cylinder	Replace gas cylinder
	Irregular gas supply	Check/replace the regulator
	The burner is blocked	Clean the burner
	Gas supply or hose is blocked	Clean gas ventury or hose
LOW FLAME OR BACKFIRE	Gas cylinder is too small	10 kg or larger cylinder is recommended
	Burner is blocked	Clean the burner
	Gas supply or hose is blocked	Clean gas ventury or hose
	Windy conditions	Place the BBQ in a less exposed position
TROUBLE TURNING THE KNOBS	Gas valve jammed	Replace gas valve. NB! Knobs should be pressed in and turned
HEAVY SMOKE	Fatty foods on the BBQ	Trim away excess fat from meat. Clean the fat tray.

Consumer Contact

This product is covered by a warranty in accordance with consumer legislation. It has undergone strict quality controls and testing at the factory. If there are any parts missing or the product has been damaged, please contact your dealer or the consumer contact below for help.

In the event of damage to the product, we ask for pictures of the damage and damage to the product's packaging is attached to the complaint.

Faults due to misuse, lack of maintenance or modification of the product will invalidate the warranty. Damaged parts not due to a fault with the product will be invoiced according to our price list + carriage and administration fee.

If new parts are needed or in the event of a warranty claim, please contact your dealer or consumer contact:

FCC PRODUCTS AS

KJELLER VEST 3, 2007 KJELLER, NORWAY

+47 924 78 600 / +46 031 189095

Support opening hours: Mon-Fri 10:00-14:00)

support@fccbbq.com

FCCBBQ.NO
FCCBBQ.SE
FCCBBQ.COM

Always attach your receipt and product serial number when making a warranty claim.
Serial number is located on the bottom plate.

Produced in China for FCC Products

We are always looking for ways we can improve our products. Therefore, we reserve the right to change technical specifications at any time. You will always find the latest manual on www.fccbbq.com