## CT20QD

| Diagram # | Stock # | Description |
|---|---|---|
| 2 | | Floor Nozzle Upper Deco |
| 3 | 41076 | Window |
| 4 | | Button Belt Reset (Deco) |
| 5 | 40801 | Lens Hgt. Adj. |
| 6 | 40823 | Filter Intake Exhaust |
| 7 | 40713 | Screw |
| 8 | 40867 | Swivel Cap |
| 9 | | Nozzel PCB Assy. |
| 10 | | Lead Wire Unit |
| 11 | 40405 | Quick Release Pedal |
| 13 | 40460 | AC Cord And Plug |
| 15 | 40416 | Rear Cover |
| 16 | 40350 | Swivel |
| 17 | 40383 | Swivel Seal |
| 19 | 40933 | Indicator Block |
| 20 | 41065 | Agitator Unit |
| 21 | 40944 | Screw |
| 22 | 40317 | Motor Bridge |
| 23 | 40724 | Gasket-Motor |
| 24 | 41021 | Motor Assy. |
| 25 | 40999 | Belt |
| 26 | 40284 | Mtr Adjustment Spring |
| 27 | | Nut, Wire |
| 28 | | Overload Protector |
| 29 | 40339 | Handle Release Pedal |
| 30 | 40625 | Lifter |
| 31 | | Floor Nozzle Lower |
| 32 | 39596 | Rear Wheel |
| 33 | 40427 | Front Axle Assy |
| 34 | 40944 | Screw |
| 35 | | Furniture Guard |
| 36 | | Lead Wire Unit |

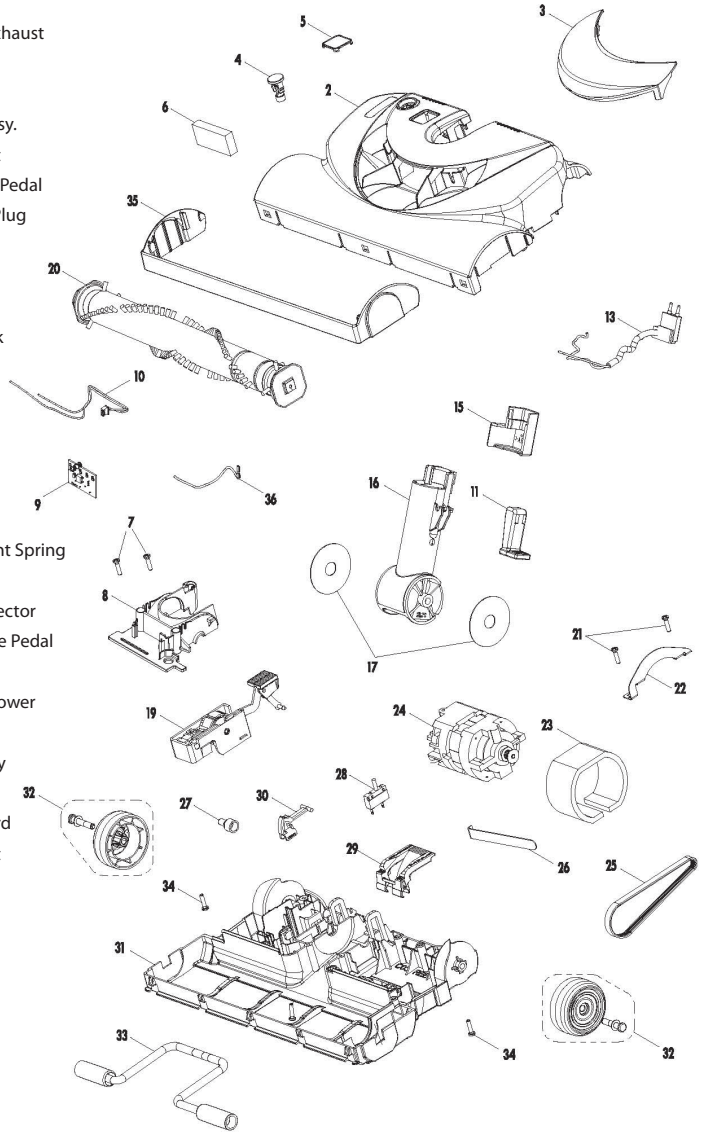





# CT20QD Electric Brush Manual

# SAFETY INSTRUCTIONS

Please read all instructions before using this Electric Powerhead.

**WARNING**

Electric shock could occur if used out doors or on wet surfaces.

1) Unplug and disconnect power before servicing.
2) Always turn off this appliance before connecting or disconnecting either hose or motorized nozzle.
3) Do not pick up anything that is burning or smoking, such as cigarettes, matches, or hot ashes.
4) Use only as described in this manual. Use only manufacturers recomm-ended attachments.
5) Do not unplug by pulling on cord. To unplug, grasp plug, not the cord.
6) Do not handle system or appliances with wet hands.
7) Turn off all controls before unplugging.
8) Do not use with damaged cord or plug. If appliance is not working as it should, has been dropped, damaged, left outdoors, or dropped into water, return it to distributor.
9) Do not allow to be used as a toy. Close attention is necessary when used by or near small children.
10) The hose contains electrical wires. Do not use if damaged, cut or punctured. Avoid picking up sharp objects.
11) Do not put any object into openings.
12) Do not use with any opening blocked; keep free of dust, lint, hair, and anything that may reduce air flow.
13) Keep hair, loose clothing, fingers, and all parts of the body away from openings and moving parts.
14) Do not leave vacuum or brush when plugged in. Unplug from outlet when not in use and before servicing.
15) Do not pick up flammable or combustible liquids such as gasoline or use it in areas where they may be present.
16) Use extra care when cleaning on stairs.

## Save These Instructions.

INTENDED FOR HOUSEHOLD USE ONLY.



# DIRT SENSOR

## Some Models

The dirt sensor light system is mounted on the CT-20DXQS nozzle near the reset button. It consists of a series of two red lights and two green lights.

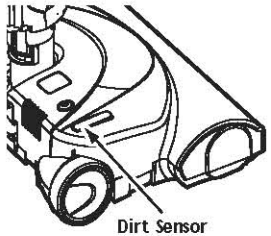


## Initial Start Up

When the CT-20DXQS is first started, the following sequences occurs in a two second time frame:

1) Two red lights come on.
2) Two green lights come on.
3) Two green lights remain on until the CT-20DXQS nozzle is placed in use.

## In Operation

When the CT-20DXQS is being moved back and forth on the floor, the lights will change from one configuration to another as more or less dirt is being vacuumed. As long as the red lights are on, dirt is passing through the wand indicating that the surface still needs cleaning.

When the green lights stay on as the CT-20DXQS is moved back and forth over an area, the sensor is not seeing enough dirt to warrant further cleaning of that area.

## Cleaning Lens

Although the dirt sensor feature in your CT-20DXQS is designed for years of trouble free use, the passage of dirt through the air passage system can coat the lens causing the green light to come on and stay on - never switching to red. When this happens the lens must be cleaned.

## To Clean The Lenses

**Note:**
DO NOT attach or remove handle or wands while cleaner is ON.

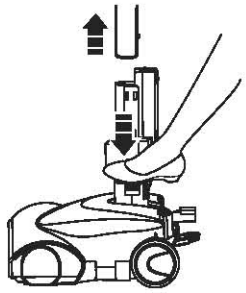

1) Remove the wands by pressing the easy release pedal and lifting up on the wands.
2) As indicated by the illustration below, the two dirt sensor elements are located on the inside of the swivel, approximately 3 1/2" (90mm) down, (note the arrows). Each element should be cleaned periodically. To reach the sensor elements, use a small brush such as a bottle brush. Brush each sensor element several times to remove dust and dirt.

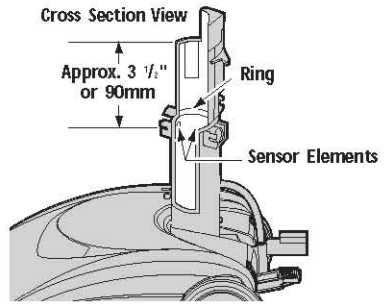


**Note:**
Looking down inside the swivel you will see a ring. The sensor elements are located just slightly below this ring.

3) Reinstall the wands after cleaning the sensors.

**WARNING**

**Never use water or any cleaning solution when cleaning the lenses. The residue of the water or cleaners will accelerate the recoating of the lenses and make cleaning necessary sooner.**

# SUGGESTED PILE HEIGHT SETTINGS

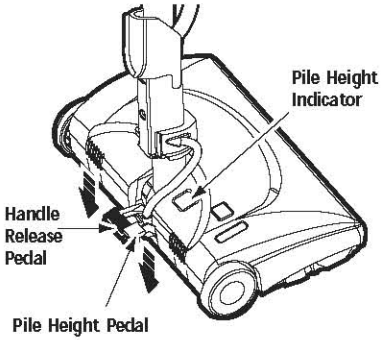


For best deep down cleaning, use the **XLO** setting. However you may need to raise the height to make some jobs easier, such as scatter rugs and some deep pile carpets, and to prevent the vacuum cleaner from shutting off. Suggested settings are:

**XLO** — most carpets and bare floors.

**MED** — medium to deep pile.

**LO** — low to medium pile.

**HI** — shag, deep pile, or scatter rugs.

# ELECTRIC BRUSH CARE

**Always follow all safety precautions when cleaning and servicing the QuietDrive™ .**

**WARNING**

**Electrical Shock or Personal Injury Hazard**

**Disconnect electrical supply before servicing or cleaning the unit. Failure to do so could result in electrical shock or personal injury from cleaner suddenly starting.**

## Belt Changing and Agitator Cleaning

**Disconnect cleaner from electrical outlet.** Frequently check and remove hair, string and lint buildup in brush area. If buildup becomes excessive, disconnect the brush from wand and follow steps below.

**To Remove Belt:**

1) Turn the QuietDrive™ upside down.

2) Unscrew the brush cover screws.

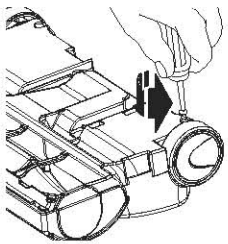

3) Turn the QuietDrive™ right side up. Press handle release pedal and lower the swivel. To remove cover, grasp the sides and pull out to release the outside of the cover.

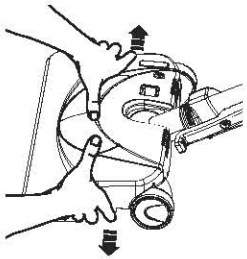

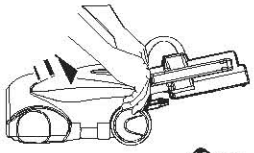

4) Lift rear latches up and tilt cover forward from back until front snaps free.

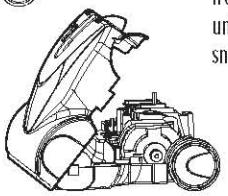

5) Lift agitator assembly out, remove worn belt and clear any hair, string or lint build-up from brush area.

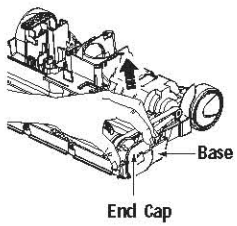




# ELECTRIC BRUSH CARE

**To Replace Belt:**

1) Install new belt over motor drive, then over brush sprocket.

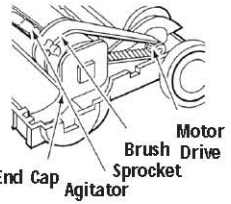


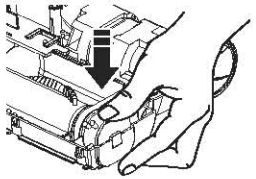

2) Replace agitator assembly back into the QuietDrive™.

3) Line up front of cover and base. Rest cover on front edge of base as shown.

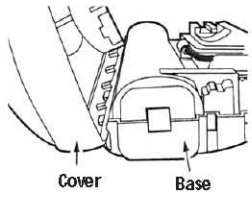


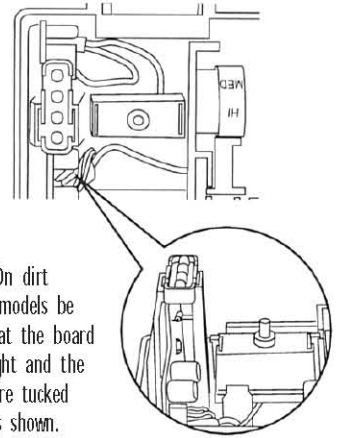


4) NOTE: On dirt sensor models be sure that the board is upright and the wires are tucked back as shown.



5) Tilt cover to back. Press cover firmly until side and rear tabs snap into place. Turn the QuietDrive™ upside down and replace the 2 cover screws.

# LIGHT BULB CHANGING

1) Remove the QuietDrive™ cover as shown in BELT CHANGING AND AGITATOR CLEANING section.

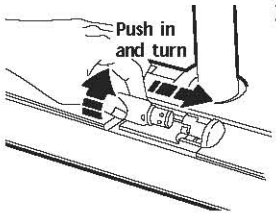


2) Push in and turn bulb counterclockwise, then pull out to remove.

3) Push in and turn the bulb clockwise, to replace. Bulb must not be higher than 130 volts / 15 Watts.

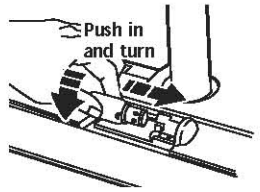


4) Reinstall the QuietDrive™ cover as shown in BELT CHANGING AND AGITATOR CLEANING section.

# AGITATOR SERVICING

**WARNING**

**Electrical Shock or Personal Injury Hazard**

**Disconnect electrical supply before servicing or cleaning the unit. Failure to do so could result in electrical shock or personal injury from cleaner suddenly starting.**

## To Check Agitator Assembly:

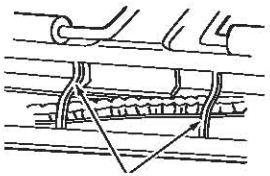

Base Support Bars

When brushes are worn to the level of the base support bars, replace the agitator assembly.

## To Replace Agitator Assembly:

1) Remove the QuietDrive™ cover, belt and agitator assembly. See "To Remove Belt" in BELT CHANGING AND AGITATOR CLEANING.

2) Reinstall belt, new agitator assembly, and QuietDrive™ cover. See "To Replace Belt" in BELT CHANGING AND AGITATOR CLEANING.

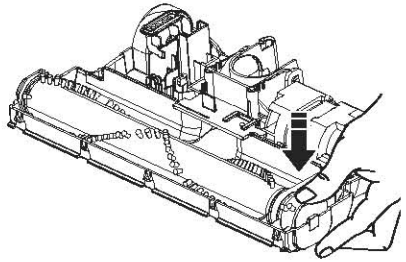

# FEATURES

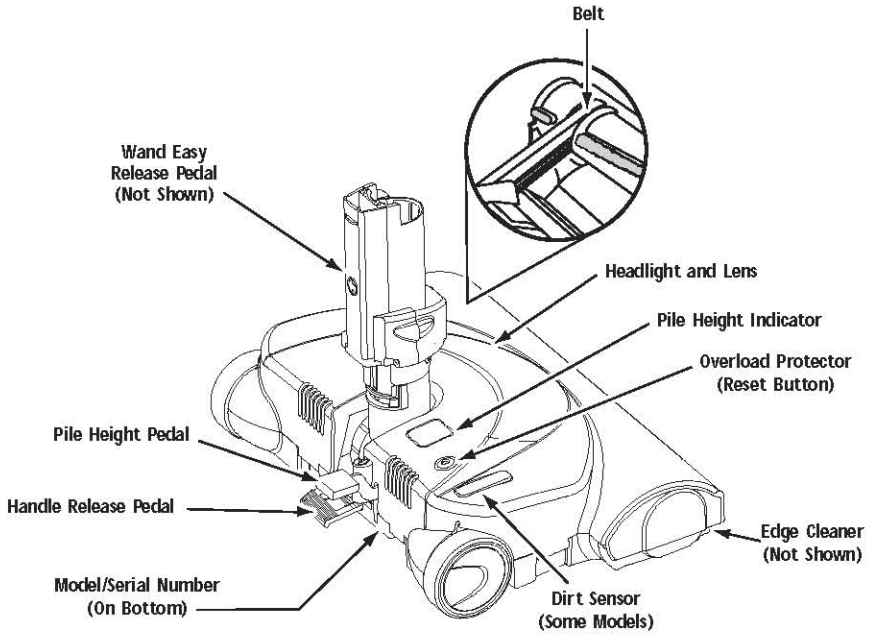




# SPECIAL FEATURES

## Edge Cleaner

Active brush edge cleaners are on both sides of the QuietDrive™ electric brush. Guide either side of the brush along baseboards or next to furniture to help remove dirt trapped at carpet edges.

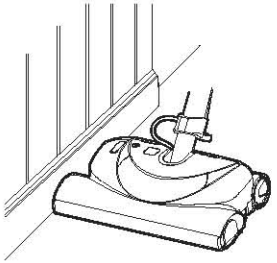

## Overload Protector

The overload protector protects the motor from brush jamming and belt breakage. If the agitator slows down or stops, the overload protector shuts off the brush.

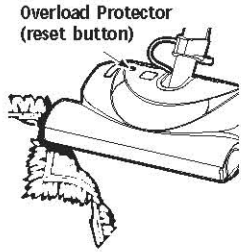


**To correct problem:**
Unplug the electrical cord, remove obstruction. Check brush area for excessive lint buildup or jamming.

**To reset:**
Press the reset button on top of the brush. Plug in the power cord, turn on vacuum and brush.

# WANDS & ATTACHMENTS

## Telescoping Wand

The wand length is adjustable and requires no assembly. To adjust, simply push down on the wand adjust button and slide the upper wand to the desired height.

When raising the wand you may have to hold the QuietDrive™ with your hand or foot.

The swivel, located on the QuietDrive™ allows you to turn the handle to the left side to reach farther under low furniture.

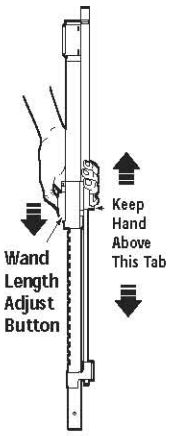


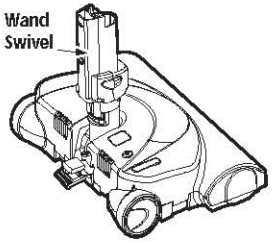


**WARNING**

**DO NOT attach or remove handle or wands while cleaner is ON. This could cause sparking and damage the electrical contacts.**

## Attachments on Wands

1. To remove wands from the QuietDrive™, lock wands in straight-up position.

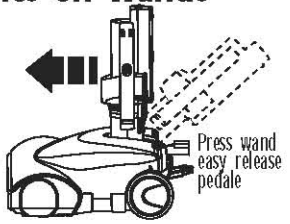


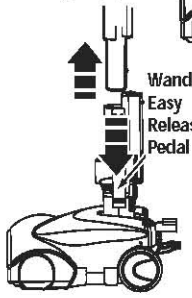


2. Press wand easy release pedal with foot and pull the wands straight up out of the QuietDrive™. The plug and cord do not have to be removed to use attachments on the wands.