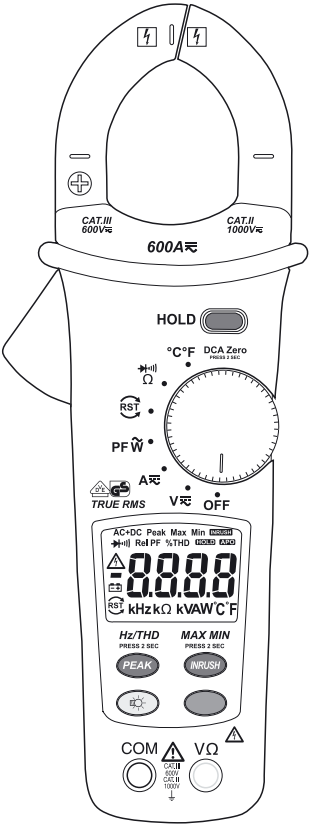

Operating manual

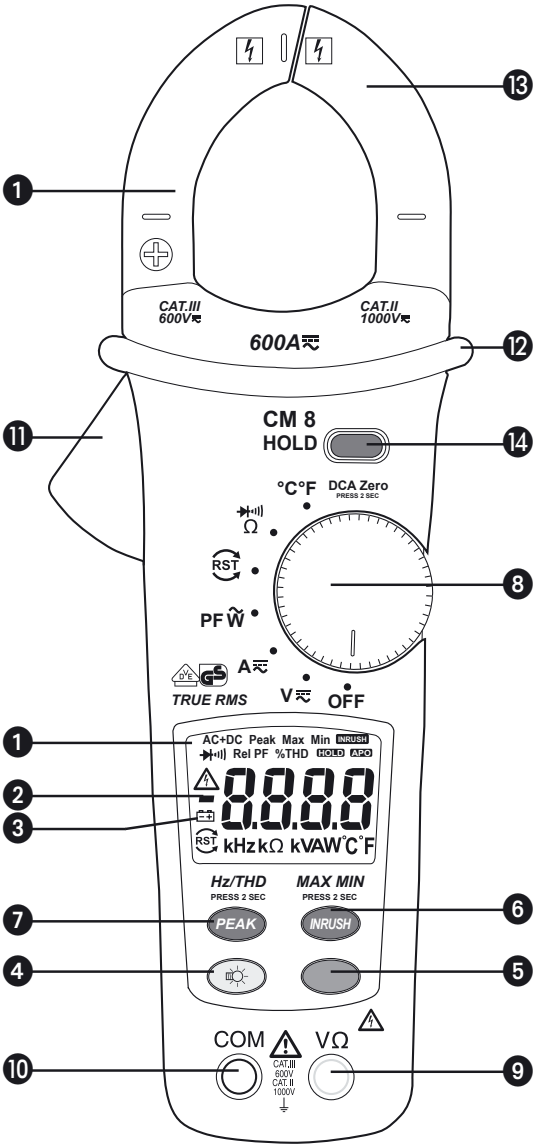

Bild 1: Gerätefrontseite
Fig. 1: Front tester panel
Fig. 1: Panneau avant de l'appareil
Fig. 1: Parte frontal del equipo
Obr. 1: Přední strana přístroje
εικόνα 1: Μπροστινή όψη
ill. 1: Lato anteriore apparecchio
Fig. 1: Voorzijde van het apparaat
Rys. 1 Panel przedni przyrządu
Imaginea 1: Partea frontală a aparatului
Рис. 1. Фронтальная сторона прибора
Resim 1: Cihaz önyüzü

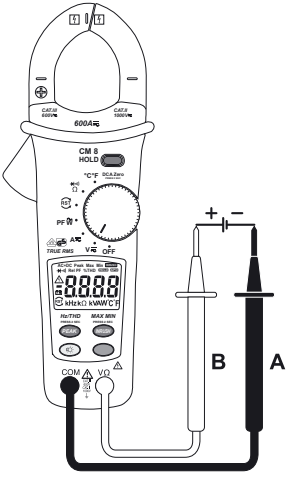

Bild 2: Gleichspannungsmessung
Fig. 2: Direct voltage measurement
Fig. 2: Mesure de tension continue
Fig. 2: Medición de tensión contínua
Obr. 2: Měření stejnosměrného napětí
εικόνα 2: Μέτρηση συνεχούς ρεύματος
ill. 2: Misura tensione continua

Fig. 2: Meten van gelijkspanning
Rys.2: Pomiar napięcia stałego
Imaginea 2: Măsurarea tensiunii continue
VРис. 2. Измерение напряжения постоянного тока
Resim 2: Doğru Gerilim Ölçümü

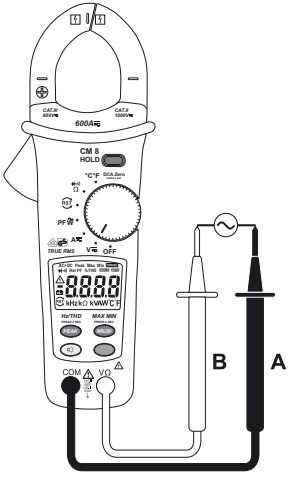

Bild 3: Wechselspannungsmessung/ Frequenzmessung
Fig. 3: Alternating voltage measurement/ Frequency measurement
Fig. 3: Mesure de tension alternative/ Mesure de fréquence
Fig. 3: Medición de tensión alterna/ Medición de frecuencia
Obr. 3: Měření střídavého napětí/ Měření frekvence
εικόνα 3: Μέτρηση εναλλασσόμενης τάσης/ μέτρηση συχνότητας

ill. 3: Misura tensione alternata/ Misura di frequenza
Fig. 3: Meten van wisselspanning/ Frequentiemeting
Rys.3: Pomiar napięcia przemiennego/ Pomiar częstotliwości
Imaginea 3: Măsurarea tensiunii alternative/ măsurarea frecvenței
Рис. 3. Измерение напряжения переменного тока/ Измерение частоты
Resim 3: Alternatif Gerilim Ölçümü/ Frekans Ölçümü

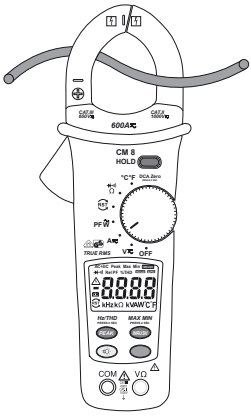

Bild 4:	Gleich-/ Wechselstrommessung (Frequenz-/ Einschaltstrommessung)	Ill. 4:	Misura di corrente continua/ alternata (misura di frequenza/ corrente d' inserzione)
Fig. 4:	**DC/ AC current measurement (frequency, inrush current measurement)**	Fig. 4:	Meten van gelijkstroom/ wisselstroom (frequentie-/ inschakelstroommeting)
Fig. 4:	Mesure de courant continu et alternatif (mesure de fréquence, du courant de démarrage)	Rys. 4:	Pomiar prądu stałego/ przemiennego (pomiar częstotliwości/ prądu załączenia)
Fig. 4:	Medida de corriente continua/ alterna (medida de frequencia/ de corriente de arranque)	Imaginea 4:	Măsurarea curentului continuu/ alternativ (măsurarea frecventei, a curentului de anclanşare)
Obr. 4:	Měření stejnosměrného/ střídavého proudu (měření frekvence, měření zapínacího proudu)	Рис. 4	Измерение величины постоянного/ переменного тока (Измерение частоты и тока включения)
Σχήμα 4:	Μέτρηση συνεχούς/ εναλλασσόμενου ρεύματος (μέτρηση συχνότητας/ ρεύματος εκκίνησης)	Resim 4:	Doğru Akım/ Alternatif Akım Ölçümü (Frekans ölçümü/ Kapama akımı)

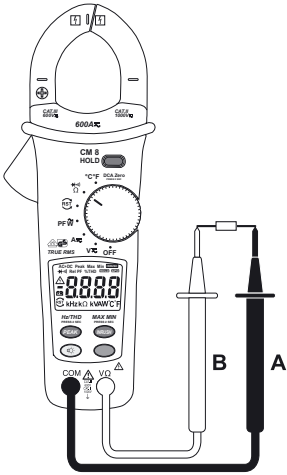

Bild 5:	Widerstandsmessung/ Diodenprüfung/ Durchgangsprüfung mit Summer	Fig. 5:	**Weerstandsmeting/ dioden-/ doorgangscontrole met zoemer**
Fig. 5:	Resistance measurement/ diode test/ continuity test with buzzer	Rys. 5:	Pomiar rezystancji/ spawdzenie diod/ sprawdzenie ciągłości obwodów z brzęczykiem
Fig. 5:	Mesure de résistance/ contrôle de diodes/ test de continuité avec ronfleur	Imaginea 5:	Măsurarea rezistenţei/ testarea diodelor/ testarea continuităţii cu buzzer
Fig. 5:	Medida de resistencia/ prueba de diodo/ de continuidad con zumbador	Рис. 5	Измерение сопротивления/ Проверка диодов/ Проверка целостности цепи с зуммером
Obr. 5:	Mení odporu/ test diod/ akustická zkouška obvodu	Resim 5:	Sesli uyarıcı ile Direnç Ölçümü/ Diyot- / Süreklilik kontrolü
Σχήμα 5:	Μέτρηση αντίστασης/ έλεγχο διόδου/ συνέχειας με ηχητικό σήμα		
Ill. 5:	Misura di resistenza/ prova dei diodi/ di continuità con cicalino		

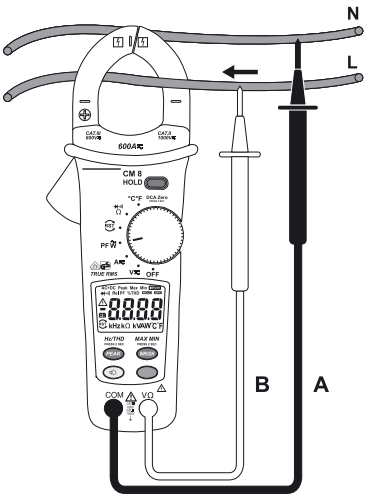

Bild 6a:	Verbraucher einphasig
Fig. 6a:	Single-phase load
Fig. 6a:	Appareil utilisateur monophasé
Fig. 6a:	Cargas en una fase
Obr. 6a:	Jednofázový spotebi
Σχήμα 6a:	Μονοφασικό φορτίο
Ill. 6a:	Utenze monofase
Fig. 6a:	Consument enkelfasig
Rys. 6a:	Obciążenie jednofazowe
Imaginea 6a:	Consumator monofazat
Рис. 6a:	потребители, однофазные
Resim 6a:	Kullanıcı tek fazlı

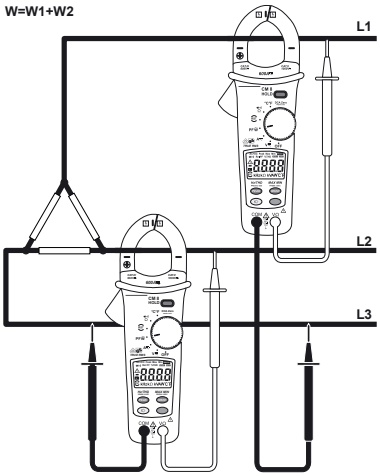

Bild 6b:	Verbraucher dreiphasig ohne N
Fig. 6b:	Three-phase load without neutral conductor (N)
Fig. 6b:	Appareil utilisateur triphasé sans conducteur neutre (N)
Fig. 6b:	Cargas trifásicas sin cable de neutro (N)
Obr. 6b:	Trojfázový spotebi bez neutrálního vedení (N)
Σχήμα 6b:	Τριφασικό φορτίο χωρίς ουδέτερο αγωγό (N)
Ill. 6b:	Utenze trifase senza conduttore neutro (N)
Fig. 6b:	Consument driefasig zonder nulleider (N)
Rys. 6b:	Obciążenie trójfazowe bez przewodu zerowego (N)
Imaginea 6b:	Consumator trifazic fără conductor neutru (N)
Рис. 6b:	потребители, трехфазные без нулевого провода (N)
Resim 6b:	Kullanıcı üç fazlı ve nötr iletken (N) yok

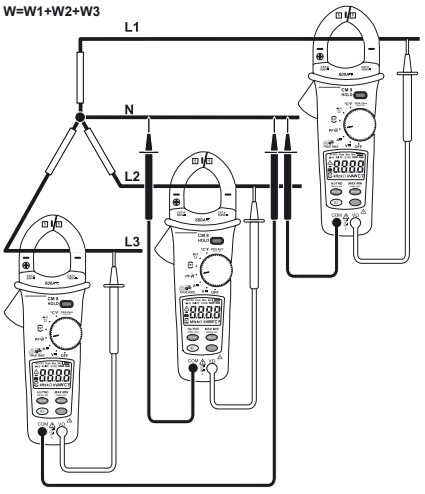

Bild 6c:	Verbraucher dreiphasig mit N
Fig. 6c:	Three-phase load with neutral conductor (N)
Fig. 6c:	Appareil utilisateur triphasé avec conducteur neutre (N)
Fig. 6c:	Cargas trifásicas con cable de neutro (N)
Obr. 6c:	Trojfázový spotebi s neutrálním vedením (N)
Σχήμα 6c:	Τριφασικό φορτίο με ουδέτερο αγωγό (n)
Ill. 6c:	Utenze trifase con conduttore neutro (N)
Fig. 6c:	Consument driefasig met nulleider (N)
Rys. 6c:	Obciążenie trójfazowe z przewodem zerowym (N)
Imaginea 6c:	Consumator trifazic cu conductor neutru (N)
Рис. 6c:	потребители, трехфазные с нулевым проводом (N)
Resim 6c:	Kullanıcı üç fazlı ve nötr iletken (N) var

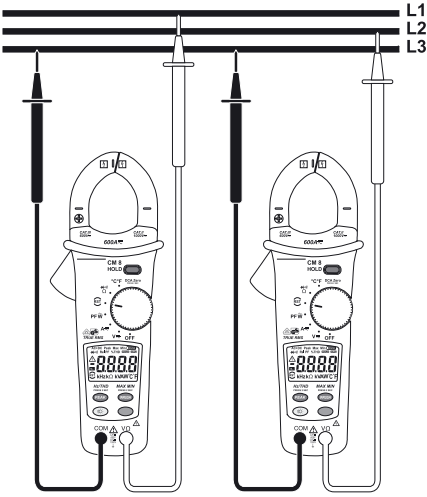

Bild 7:	Drehfeldrichtungsanzeige
Fig. 7:	Phase sequence indication
Fig. 7 :	Indication d'ordre de phases
Fig. 7:	Medida de secuencia de fases
Obr. 7:	Ukazatel smru fází
Σχήμα 7:	Ένδειξη διαδοχής φάσης
Ill. 7:	Indicazione della direzione del campo rotante
Fig. 7:	Draaiveldrichting informatie
Rys. 7:	Pokazuje kierunek wirowania pola
Imaginea 7:	Indicarea fazei secvențiale
Рис. 7:	Индикация направления вращения магнитного поля.
Resim 7:	Değişken Alan Ölçümü

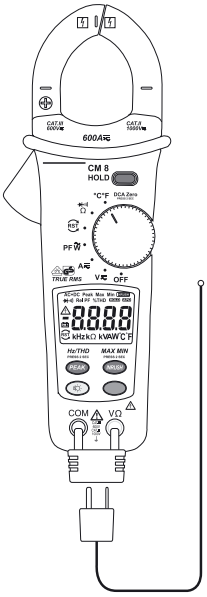

Bild 8:	Temperaturmessung
Fig. 8:	Temperature measurements
Fig. 8 :	Mesure de la température
Fig. 8:	Medida de temperatura
Obr. 8:	Mení teploty
Σχήμα 8:	Μέτρηση θερμοκρασίας.
Ill. 8:	Misura della temperatura
Fig. 8 :	Temperatuurmeting
Rys. 8	Pomiar temperatury
Imaginea 8:	Măsurarea temperaturii
Рис. 8:	Измерение температуры.
Resim 8:	Sıcaklık Ölçümü

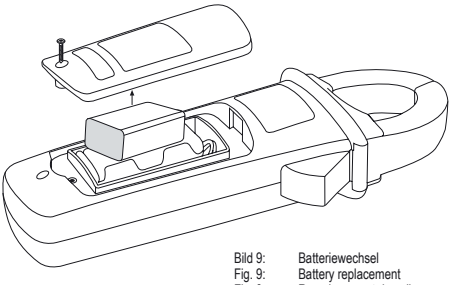

Bild 9:	Batteriewechsel
Fig. 9:	Battery replacement
Fig. 9 :	Remplacement des piles
Fig. 9:	Cambio de pilas
Obr. 9:	Výmna baterií
Σχήμα 9:	Αντικατάσταση μπαταριών
Ill. 9:	Sostituzione della batteria
Fig. 9:	Vervanging van de batterij
Rys. 9:	Wymiana baterii
Imaginea 9:	Schimbarea bateriilor.
Рис. 9.	Замена батарейки
Resim 9.	Batarya Değişimi

Operating manual

Digital current clamp multimeter for

- DC voltage measurements
- AC voltage measurements
- DC current measurements
- AC current measurements
- inrush current measurements
- frequency measurements
- measurements of harmonic distortion
- resistance measurements
- diode tests
- continuity tests
- effective power measurements
- power factor measurements (cos phi)
- phase sequence indication
- temperature measurements

Table of contents

1. User instructions
2. Safety instructions
3. Scope of delivery
4. Device description
5. General information
6. Ambient conditions
7. Electrical specifications
8. Measuring with the MPC 8
9. Maintenance
10. Technical data of measuring accessories
11. Environmental protection

1. User instructions

This operating manual is intended for

- skilled electricians and
- electrotechnically trained personnel.

The MPC 8 is intended for measurements under dry ambient conditions. It must not be used in electrical circuits with a nominal voltage higher then 1000 V DC and 1000 V AC (see section 6 „Ambient conditions“ for details).
The following symbols are used in this operating manual and on the MPC 8


Application around and removal from HAZARDOUS LIVE conductors is permitted.


Warning of electrical danger!
Indicates instructions which must be followed to avoid danger to persons.


Attention! Must comply with documentation!
This symbol indicates that the information provided in the operating manual must be complied with in order to avoid risks.


This symbol on the MPC 8 indicates that the MPC 8 is equipped with protective insulation (protection class II).


This symbol appears on the display to indicate a discharged battery.


This symbol designates the „diode test“ field.


This symbol designates the „continuity test“ field.
The buzzer is intended for acoustic result output.



This symbol designates the „phase sequence indication“ field.


(DC) Direct voltage or current


(AC) Alternating voltage or current

Ground (voltage against ground)

2. Safety instructions

The instrument is built and tested in accordance with
DIN VDE 0411 Part 1/ EN 61010-1
and has left the factory in perfectly safe technical condition.
To preserve this condition and to ensure safe operation of the device, the user must observe the notes and warnings given in these instructions at all times.

The MPC 8 must be used in electrical circuits of overvoltage category II with a conductor for a maximum of 1000 V to earth or of overvoltage category III with a conductor for a maximum of 600 V to earth only.
Please observe that work on live parts and electrical components of all kinds is dangerous! Even low voltages of 30 V AC and 60 V DC may be dangerous to human life!

Before starting the current clamp multimeter, always check the device as well as all cables for damages.

If it can be assumed that safe operation is no longer possible, switch the device off immediately and secure it against unintended operation.

Safe operation can be assumed to be no longer possible, if
- the device or the measuring lines exhibit visible damages,
- the device no longer works,
- the device has been stored under unfavourable conditions for a longer period of time,
- the device was exposed to extraordinary stress during transport.

In order to prevent danger
- **do not touch the bare measuring probe tips of the measuring lines,**
- **insert the measuring lines into the respectively designated measuring socket of the multimeter.**

3. Scope of delivery

The scope of delivery of the MPC 8comprises:
3.1 One MPC 8,
3.2 One safety measuring line, red (L = 1.4 m; probe tip Ø = 4 mm),
3.3 One safety measuring line, black (L = 1.4 m; probe tip Ø = 4 mm),
3.4 One temperature sensor type K,
3.5 One adapter for temperature sensor,
3.6 One compact protective pouch,
3.7 One 9 V block battery for initial assembly is integrated into the device,
3.8 One operating manual.

Note on optional accessories:
- Temperature sensor (type K) made of V4A steel tube

Application:	Insertion sensor for flexible substances, liquids, gas and air
Measuring range:	- 196 °C to + 800 °C
Dimensions:	Length = 210 mm, tube length = 120 mm, tube diameter = 3 mm, V4A

Parts subject to wear:
- The MPC 8 is supplied by means of an integrated 9 V block battery (IEC 6 LR 61).
- The safety measuring cables ATL-2 mentioned above (tested accessories) comply with CAT III 1000 V and are approved for a current of 10 A.

4. Device description

See figure 1: Device front

The display and operating elements shown in figure 1 are designated as follows:
❶ **Digital display**, displaying measured value and range exceedance,
❷ **Polarity indication**,
❸ **Battery indication**, appears in case of discharged battery,
❹ **Key (yellow)**, display illumination,
❺ **Key (blue)**, change-over key, measuring type
❻ **INRUSH/ MAX-MIN key**, inrush current (AC A) detection/ storage of the highest and lowest measuring value,
❼ **PEAK/ Hz-THD key**, peak value storage/ frequency measurement,
❽ **Rotary switch**, for selecting the measuring function,
❾ **Jack** (positive[1]), for V and Ω

⑩ **COM jack**, common jack for voltage/ frequency/ resistance measurements, diode tests and continuity tests,
⑪ **Opening lever**, for opening and closing the current clamp,
⑫ **Bulge for current clamp**, protects against contact with conductor,
⑬ **Measuring clamp**, for clamping on the single-wire live conductor,
⑭ **HOLD/ DCA ZERO key**, storage of the displayed measured value/ null balance for A DC current measurements,
[1]) This is what the automatic polarity indication for DC voltage refers to

5. General information

5.1 General information on the current clamp multimeter

5.1.1 The digital display ❶ is a $3^{5}/_{6}$-digit LC display with a font size of 14 mm and a decimal point. The highest numerical value to be displayed is 6000.

5.1.2 The polarity indication ❷ works automatically. Only a polarity contrary to the jack definition is indicated with „-“.

5.1.3 The range exceedance is indicated by „OL“ or „-OL“ and partly by an acoustic warning.
Attention, no indication and warning in case of overload!

5.1.4 By means of the yellow key ❹, the display illumination can be activated. It can be deactivated by pressing the key again or it is deactivated automatically after 30 seconds. By pressing the yellow key ❹ for approx. 2 seconds, the battery voltage is briefly indicated in V.

5.1.5 The „HOLD/ DCA ZERO“ key ⑭ has two functions: By pressing the „HOLD/ DCA ZERO“ key ⑭, the measuring result can be stored. The „HOLD“ symbol simultaneously appears on the display. By pressing the key ⑭ again, the device is switched back into measuring mode. The HOLD function is available for all measuring types.
By pressing the „HOLD/ DCA ZERO“ key ⑭ for approx. 2 seconds, the device and the display indication are balanced to null in the DC A current measuring range (rotary switch ❽ and blue key ❺, if necessary).

5.1.6 The „INRUSH/ MAX-MIN“ key ❻ has two functions: In measuring type „AC A“ (rotary switch ❽ and blue key ❺, if necessary), the measuring mode „INRUSH Current“ is activated by pressing the key ❻. Here, the measuring process is initiated for 100 milliseconds after a current is applied. The averaged value of this time period is displayed. The MAX-MIN function is started by pressing the „INRUSH/ MAX-MIN“ key for approx. 2 seconds.
By means of the MAX-MIN key function ❻, the highest and the lowest measured value is stored automatically. By pressing the key, the following values are displayed:
„MAX“ displays the highest value stored and „MIN“ displays the lowest value. The continuous detection of the MAX-MIN value can be stopped or started by pressing the „HOLD“ key ⑭. By pressing the „MAX-MIN“ key for approx. 2 seconds, the instrument is switched back to normal operating mode.
The MAX-MIN function is available for all measuring types. When using the MAX-MIN function, the **APO** (**A**uto-**P**ower-**O**ff) function is deactivated.

5.1.7 The „PEAK/ HZ-THD“ key ❼ has three functions:
In V AC and A AC measuring type (rotary switch ❽ and blue key ❺, if necessary), the peak value storage is activated by pressing this key. Here, the positive and the negative peak / crest value are detected and displayed. By pressing the key ❼, the values of „Peak Max“ or „Peak Min“ are displayed. The continuous detection of the peak value storage can be stopped or started by pressing the „HOLD“ key ⑭. By pressing the key for approx. 2 seconds, the instrument is switched back to normal operating mode. By pressing the „Peak/ Hz-THD“ key for approx. 2 seconds in the same meausring type (V AC and A AC), the instrument is switched to the frequency measuring mode.
By pressing the key again, the device is switched to the %THD mode (%harmonic distortion). By pressing the key for approx. 2 seconds, the instrument is switched back to normal operating mode. The measuring mode „%THD“ gives the information in % of the ratio of the effective values of the harmonic waves to the total of fundamental and harmonic waves (distortion factor or THD-R). The fundamental wave may range between 45 Hz...65 Hz (V AC or A AC).

5.1.8 Special functions: By pressing a certain key and switching on the rotary switch ❽ at the same time from OFF position, the following functions or information can be obtained (release the key approx. 2 seconds after rotating the switch):
PEAK key ❼: Cancelling the **APO** function. The automatic battery switch-off is deactivated.
INRUSH key ❻: Displaying the software version.

HOLD key ⑭: Displays all LCD symbols/ segments for approx. 10 seconds.

5.1.9 Buzzer: The signal sounds once for each valid actuation of a key and twice for each inadmissible actuation of a key (e.g. if functions cannot be used for certain measuring types).

5.1.10 The nominal measuring rate of the MPC 8 is 3 measurements per seconds for the digital display.

5.1.11 The MPC 8 is switched on or off by means of the rotary switch ⑧. Switch-off position „OFF".

5.1.12 The MPC 8 is switched off automatically after approx. 10 minutes (**APO**, **A**uto-**P**ower-**Off**). It is switched on again, if a key or the rotary switch is actuated. A buzzer sound indicates the automatic switch-off of the device. Automatic switch-off can be deactivated by pressing the „PEAK" key and by simultaneously switching on the MPC 8 from the switching position „OFF".

5.1.13 Temperature coefficient of the measured value: 0.2 x (stated measuring accuracy)/ °C < 18 °C or > 28 °C, related to the value for the reference temperature of 23 °C.

5.1.14 The MPC 8 is supplied by means of a 9 V block battery (IEC 6 LR 61).

5.1.15 If the battery voltage falls below the specified operating voltage (7 V) of the MPC 8, a battery symbol appears on the display.

5.1.16 The battery life is approx. 50 hours (alkaline battery).

5.1.17 Dimensions of the MPC 8:
(L x W x H) = 235 x 85 x 51 mm
Weight: 380 g

5.1.18 The safety measuring lines are designed in 4 mm plug-in technology. The enclosed safety measuring lines are explicitly intended for the nominal voltage and the nominal current of the MPC 8.

5.1.19 Largest clamp opening: 40 mm

5.1.20 Largest cable diameter: 35 mm

6. Ambient conditions

- The MPC 8 is intended for measurements under dry ambient conditions,
- Maximum barometric height for measurements: 2000 m,
- Overvoltage category / installation category: IEC 60664-1/ IEC 61010-1 → 600 V category III; 1000 V category II
- Contamination class: 2,
- Protection category: IP 30 (DIN VDE 0470-1 IEC/ EN 60529)
  3 – first index: protection against access to dangerous parts and protection against solid impurities of a diameter > 2.5 mm
  0 – second index: no protection against water
- Operating temperature and relative air humidity:
  For operating temperatures from 0 °C to 30 °C: relative air humidity lower than 80 %,
  For operating temperatures from 31 °C to 40 °C: relative air humidity lower than 75 %,
  For operating temperatures from 41 °C to 50 °C: relative air humidity lower than 45 %,
- Storage temperature: The MPC 8 can be stored at temperatures between - 20 °C and + 60 °C (air humidity 0 to 80 %). During storage, the battery should be removed.

7. Electrical specifications

Note: The measuring accuracy is specified as the sum of:
- a relative part of the measured value and
- a number of digits (i.e. counting steps of the last digit).

This measuring accuracy applies to temperatures from 18 °C to 28 °C and a relative air humidity lower than 80 %.

7.1 DC voltage ranges

The input resistance is 3 MΩ.

Measuring range	Resolution	Measuring accuracy	Overload protection
60 V	0.01 V	± (0.7 % of the measured value + 5 digits)	1000 V_{eff}
600 V	0.1 V	± (0.7 % of the measured value + 5 digits)	1000 V_{eff}
1000 V	1 V	± (0.7 % of the measured value + 5 digits)	1000 V_{eff}

7.2 AC voltage ranges

The input resistance is 3 MΩ in parallel 100 pF.

Measuring range	Resolution	Measuring accuracy *1 within the frequency range 45 Hz – 500 Hz	Overload protection
60 V	0.01 V	± (1 % des Messwertes + 5 Digit)	1000 V_{eff}
600 V	0.1 V	± (1 % des Messwertes + 5 Digit)	1000 V_{eff}
1000 V	1 V	± (1 % des Messwertes + 5 Digit)	1000 V_{eff}

*1 The measured value is obtained and displayed as real r.m.s. value (True RMC, AC coupling). The measuring accuracy is specified for a sinusoidal curve.
For non sinusoidal curves, the accuracy of the displayed value decreases.
There is no additional error if the crest factor is within following specification (AC V, 45 Hz - 65 Hz):

Range:	Crest factor:
0 ~ 450 V	up to 3
450 V ~ 1000 V	from 3 (450 V) linear decreasing to 1.42 (1000 V)

Peak Hold: Peak Max/ Peak Min (AC V)

Measuring range	Measuring accuracy
85.0 V... 1400 V	± (3 % of the measured value +15 digits)

7.3 DC current ranges

Measuring range	Resolution	Measuring accuracy	Overload protection
600 A	0.1 A	± (1.5 % of the measured value + 5 digits)	600 A_{eff}

The specified accuracy for conductors that are centrally clamped by means of the current clamp ⓭ (see figure 4 DC/ AC current measurement). For conductors that are not centrally clamped, an additional error of 1 % of the displayed value has to be considered.
Maximum remanence error: 1 % (in case of repeated measuring)
Condition: Null balance before measuring!

7.4 AC current ranges

Measuring range	Resolution	Measuring accuracy *1 within the frequency range 45 Hz – 65 Hz	Overload protection
600 A	0.1 A	± (1.5 % of the measured value + 5 digits)	600 A_{eff}
		within the frequency range 66 Hz - 400 Hz	
600 A	0.1 A	± (2.5 % of the measured value + 5 digits)	600 A_{eff}

*1 The measured value is obtained and displayed as real r.m.s. value (True RMC, AC coupling). The measuring accuracy is specified for a sinusoidal curve.
For non sinusoidal curves, the accuracy of the displayed value decreases.
Thus, an additional error results for
Crest factor from 1.4 to 2.0 additional error + 1 %
Crest factor from 2.0 to 3.0 additional error + 2.0 %
within following specification: (AC A, 45 Hz - 65 Hz)

Range:	Crest factor:
0 ~ 250 A	up to 3
250 A ~ 600 A	from 3 (250 A) linear decreasing to 1.42 (600 A)

The specified accuracy for conductors that are centrally clamped by means of the current clamp ⓭ (see figure 4 DC/ AC current measurement). For conductors that are not centrally clamped, an additional error of 1 % of the displayed value has to be considered.

Peak Hold: Peak Max/ Peak Min (AC A)

Measuring range	Measuring accuracy
85.0 A... 850 A	± (3 % of the measured value +15 digits) (for AC + DC with null balance)

7.5 Inrush current (INRUSH)

Overload protection: 600 A_{eff}
Sinusoidal curve: 50 Hz - 60 Hz, average time approx. 100 ms

Range	Resolution	Measuring accuracy	Sensitivity
AC A 60 A	0.1 A	± (2.5 % of the measured value + 2 A)	> 10 A_{eff}
AC A 600 A	1 A	± (2.5 % of the measured value + 5 digits)	> 10 A_{eff}

7.6 Frequency ranges (AC V/ AC A)
Overload protection for frequency measurements: 1000 V_{eff}/ 600 A_{eff}
Sinusoidal curve 50 Hz - 400 Hz, minimum 20 Hz

Measuring range	Resolution	Measuring accuracy	Sensitivity
400 Hz	0.1 Hz	± (0.1 % of the measured value + 5 digits)	≥ 5 V_{eff} / ≥ 5 A_{eff}
4000 Hz	1 Hz	± (0.1 % of the measured value + 5 digits)	usable in case of reduced sensitivity

7.7 Harmonic distortion (%THD)
Overload protection: 1000 V_{eff}/ 600 A_{eff}

Range	Resolution	Measuring accuracy	Sensitivity
AC V	0.1 %	± (3 % of the measured value +10 digits)	> 10 V_{eff}
AC A	0.1 %	± (3 % of the measured value +10 digits)	> 10 A_{eff}

If sensitivity is not sufficient, „rdy“ appears on the display. If the measurement is done outside the frequency range (45 Hz - 65 Hz), „out.F“ appears on the display. Evaluation of the upper harmonic wave up to the 25th harmonic wave (upper harmonic wave).

7.8 Resistance measuring ranges
Overload protection for resistance measurements: 600 V_{eff}

Measuring range	Resolution	Measuring accuracy	Max. open-circuit voltage
600 Ω	0.1 Ω	± (1 % of the measured value + 5 digits)	2.4 V
6 kΩ	1 Ω	± (1 % of the measured value + 5 digits)	2.4 V
20 kΩ	10 Ω	± (1 % of the measured value + 5 digits)	2.4 V

Highest displayed value: 5400.

7.9 Diode and continuity test
The stated measuring accuracy applies to a range between 0.4 V and 0.8 V.
Overload protection: 600 V_{eff}
The integrated buzzer sounds at a resistance R lower than 30 Ω.

Measuring range	Resolution	Measuring accuracy	Max. measuring current	Max. open-circuit voltage
⏩	10 mV	± (1.5 % of the measured value + 5 digits)	1.0 mA	3.0 V
)))	0,1 Ω	± (1.0 % of the measured value + 5 digits)		2.4 V

7.10 Effective power (kW) / **power factor** (PF)
Overload protection: 1000 V_{eff}/ 600 A_{eff}
Sinusoidal curve: 45 Hz - 65 Hz

Range	Resolution	Measuring accuracy	Sensitivity
4 kW	1 W	The accuracy depends on the voltage and current deviations!	≥ 10 V_{eff} ≥ 5 A_{eff}
40 kW	10 W		
400 kW	100 W		
600 kW	1 kW		

Power factor PF: - 1.00... 0.00... + 1.00 ± 3°

7.11 Temperature ranges °C
Overload protection for temperature measurements: 600 V_{eff}

Measuring range	Resolution	Measuring accuracy
- 50 °C ~ 399.9 °C	0.1 °C	± (1 % of the measured value + 3 °C)
400 °C ~ 1000 °C	1 °C	± (1 % of the measured value + 3 °C)

The specified values only apply, if the ambient temperature of the multimeter is

within ± 1 °C. In case of a temperature change, the multimeter needs approx. 1 hour to regain stability.

7.12 Temperature ranges °F

Overload protection for temperature measurements: 600 V_{eff}

Measuring range	Resolution	Measuring accuracy
- 58 °F ~ 751.9 °F	0.1 °F	± (1 % of the measured value + 6 °F)
752 °F ~ 1832 °F	1 °F	± (1 % of the measured value + 6 °F)

The specified values only apply, if the ambient temperature of the multimeter is within ± 1 °F. In case of a temperature change, the multimeter needs approx. 1 hour to regain stability.

8. Measuring with the MPC 8

8.1 Preparing the measurement

Operate and store the MPC 8at the specified storage and operating temperatures only! Do not permanently expose the device to sunlight.

- Strong sources of interference in the vicinity of the MPC 8 might involve unstable readings and measuring errors.
- Check stated nominal voltage and nominal current on the safety measuring lines. Nominal voltage and current of the enclosed safety measuring lines comply with the respective values of the MPC 8
- Check insulation of the safety measuring lines. If the insulation is damaged, the safety measuring lines must be replaced immediately.
- Check the safety measuring lines for continuity. If the conductor in the safety measuring line is interrupted, replace the safety measuring lines immediately.
- Before selecting another function by means of the rotary switch ❽, disconnect the safety measuring lines from the measuring point.
- Strong sources of interference in the vicinity of the BMPC 8 might involve unstable readings and measuring errors.

8.2 Voltage measurements (frequency measurements, THD - harmonic distortion)

⚠ **Do not exceed the maximum permitted voltage with respect to earth potential! Electrical danger!**

The highest voltage that may be applied to the jacks
- COM jack ❿
- jack for V and Ω ❾

of the MPC 8 against ground is 1000 V.

- Select the desired function (V AC / DC) by means of the rotary switch ❽ of the MPC 8
- Select the voltage type direct voltage (DC) or alternating voltage (AC) to be measured by means of the blue key ❺ of the MPC 8
- Connect the black safety measuring line to the COM jack ❿ of the MPC 8
- Connect the red safety measuring line to the jack for V and Ω ❾ of the MPC 8
- Bring the safety measuring lines into contact with the measuring points and read the measured value on the digital display ❶ of the MPC 8.
- In the AC range, it is possible to switch over to the frequency measuring mode by pressing the „PEAK/ Hz-THD“ key ❼ for approx. 2 seconds. You can switch back by pressing the key for another 2 seconds. Normal pressing of the key switches the device into the THD mode (%harmonic distortion).

See figure 2: DC voltage measurement
See figure 3: AC voltage measurement/ frequency measurement

8.3 Current measurements (frequency measurements, THD-harmonic distortion)

8.3.1 Preparing the measurement

Operate and store the MPC 8 at the specified storage and operating temperatures only! Do not permanently expose the device to sunlight.

- Strong sources of interference in the vicinity of the MPC 8 might involve unstable readings and measuring errors.

⚠ **Do not apply any voltage to the output contacts of the MPC 8 ! Any possibly connected safety measuring lines have to be removed.**

8.3.2 Current measurements

- Select the desired function (A AC/ DC) by means of the rotary switch ❽ of

the MPC 8.
- Select the current type (direct current DC or alternating current AC) to be measured by means of the blue key ❺ of the MPC 8 and perform a null balance ⓮, if necessary.
- Operate the opening lever ⓫ and clamp the single-wire live conductor centrally by means of the clamp ⓭ of the MPC 8.
- Read the value indicated on the digital display ❶.
- In the AC range, it is possible to switch over to the frequency measuring mode by pressing the „PEAK / Hz-THD“ key ❼ for approx. 2 seconds. You can switch back by pressing the key for another 2 seconds. Normal pressing of the key switches the device into the THD mode (%harmonic distortion).

See figure 4: DC/ AC current measurement (frequency, inrush current measurement)

8.4 Inrush current measurements (AC)
- Select the function (A) by means of the rotary switch ❽ of the MPC 8
- Select the current type AC current by means of the blue key ❺ of the MPC 8
- Briefly press the „INRUSH“ key ❻.
- Operate the opening lever ⓫ and clamp the single-wire live conductor centrally by means of the clamp ⓭ of the MPC 8
- Switch on the load.
- Read the value indicated on the digital display ❶.

See figure 4: DC/ AC current measurement (frequency, inrush current measurement)

8.5 Resistance measurements
- Select the function (Ω) by means of the rotary switch ❽ of the MPC 8
- Connect the black safety measuring line to the COM jack ❿ of the MPC 8
- Connect the red safety measuring line to the jack for V and Ω ❾ of the MPC 8
- Bring the safety measuring lines into contact with the measuring points and read the measured value on the digital display ❶ of the MPC 8.

See figure 5: Resistance measurement/ diode test/ continuity test with buzzer

8.6 Diode tests
- Select the function (⊣◁)) by means of the rotary switch ❽ of the MPC 8
- Connect the black safety measuring line to the COM jack ❿ of the MPC 8
- Connect the red safety measuring line to the jack for V, Ω ❾ of the MPC 8
- Bring the safety measuring lines into contact with the diode connections and read the measured value on the digital display ❶ of the MPC 8
- For a standard Si diode applied in conduction direction, a conduction voltage between 0.400 V and 0.900 V is displayed. „000“ indicates a short-circuit inside the diode, „OL“ indicates an interruption inside the diode.
- For a diode applied in reverse direction, „OL“ is indicated. If the diode is defective, „000“ or other values are indicated.

See figure 5: Resistance measurement/ diode test/ continuity test with buzzer

8.7 Continuity tests with buzzer
- Select the function (⊣◁)) by means of the rotary switch ❽ of the MPC 8
- Connect the black safety measuring line to the COM jack ❿ of the MPC 8
- Connect the red safety measuring line to the jack for V, Ω ❾ of the MPC 8
- Bring the safety measuring lines into contact with the measuring points. If the line resistance between the COM jack ❿ and the jack for V, Ω ❾ falls below 30 Ω, the integrated buzzer of the MPC 8 sounds.

See figure 5: Resistance measurement/ diode test/ continuity test with buzzer

8.8 Effective power measurements/ power factor measurements
- Select the function (W/ PF) by means of the rotary switch ❽ of the MPC 8
- Connect the black safety measuring line to the COM jack ❿ of the MPC 8

- Connect the red safety measuring line to the jack for V and Ω ❾ of the MPC 8
- Connect the black safety measuring line to the neutral conductor (N) of the supplying mains.
- Connect the red safety measuring line to the phase (L1) of the supplying mains.
- Operate the opening lever ⓫ and clamp the single-wire live conductor centrally by means of the clamp ⓭ of the MPC 8. The „+“ symbol on the clamp must be directed towards the energy source.
- By means of the blue key ❺, it is possible to switch over from effective power (W) to power factor (PF).

Note on effective power:
If the energy flow changes its direction (from the load in direction of the energy source), the „minus“ symbol ❷ is displayed.
Note on power factor:
In case of correct polarity and if no sign is displayed, there is an inductive load. If the „minus“ sign ❷ is dislayed, there is a capacitive load.
General note:
For voltages below 0.5 V_{eff} or currents below 0.5 A_{eff} , nothing is displayed. Overflow indication (0.L) at > 1000 V_{eff}; > 620 A_{eff}; > 600 kW. Please observe figures 6b and 6c for measurements in the three-phase supply network.

See figure 6a: single-phase load
See figure 6b: three-phase load without neutral conductor (N)
See figure 6c: three-phase load with neutral conductor (N)

8.9 Phase sequence indication

- Select the function „RST“ by means of the rotary switch ❽ of the MPC 8
- Connect the black safety measuring line to the COM jack ❿ of the MPC
- Connect the red safety measuring line to the jack for V and Ω ❾ of the MPC 8
- Connect the black safety measuring line to the assumed phase L3.
- Connect the red safety measuring line to the assumed phase L1. With normal function, „L1“ is displayed for approx. 3 seconds. *1
- If „L2“ is displayed, the buzzer sounds twice. In this case, immediately bring the red safety measuring line into contact with the assumed phase L2 while „L2“ still is indicated.
- When the „L2“ indication disappears, the test result is displayed as follows:
  a) „1,2,3“ indication = clockwise phase sequence, L1 in front of L2
  b) „3,2,1“ indication = anti-clockwise phase sequence, L2 in front of L1
  c) „----“ indication = measurement cannot be evaluated
  d) „Lo V“ indication = One of the safety measuring lines has not been contacted during measurement.
- Press the blue key ❺ to repeat the measurement.

*1 Note:
If the voltage is < 30 V, „Lo V“ is displayed and if the voltage is > 1000 V, „O.L V“ is displayed. If the frequency is not within the range from 50 Hz or 60 Hz, „out.F“ is displayed.
The three-phase network system does not have to be earthed!

See figure 7: Phase sequence indication

8.10 Temperature measurements

- Select the function (°C/ °F) by means of the rotary switch ❽ of the MPC 8
- Select the desired indication mode °C or °F by means of the blue key ❺ of the MPC 8.
- Connect the temperature measuring adapter to the COM jack ❿ and to the jack for V, Ω ❾ observing correct polarity.
- Connect the temperature sensor (type K) to the adapter.
- Place the contact point (end of the sensor line) at the point to be measured. Read the measured value on the digital display ❶ of the MPC 8.

See figure 8: Temperature measurements

9. Maintenance

Before opening the MPC 8, strictly observe that the device is free of voltage! Electrical danger!

Working on the opened MPC 8under voltage must be carried out by **skilled electricians only who must observe special precautions for the prevention of accidents!**
To make sure that the MPC 8 is free of voltage before opening the device, proceed as follows:

- First, remove both safety measuring lines from the object to be measured.
- Then, remove both safety measuring lines from the MPC 8.
- Switch the rotary switch ❽ to position „OFF“.

9.1 Securing the device

Under certain circumstances, safe operation of the MPC 8 might no longer be ensured, e.g. in case of:

- visible damages of the housing,
- incorrect measuring results,
- recognizable consequences of prolonged storage under inadmissible conditions and
- recognizable consequences of extraordinary stress due to transport.

In such cases, immediately switch off the MPC 8 disconnect it from the measuring points and secure it against further use.

9.2 Cleaning

Clean the exterior of the device with a clean dry cloth (exception: spezial cleaning wipers). Do not use any solvents and/or abrasives to clean the device. Make sure that the battery compartment and the battery contacts are not contaminated by leaking battery electrolyte.
If there are electrolyte contamination or white deposits in the area of the battery or the battery housing, clean these areas as well by means of a dry cloth.

9.3 Battery replacement

⚠ **Before opening the MPC 8, strictly observe that the device is free of voltage! Electrical danger!**

The MPC 8 is supplied by means of an integrated 9 V block battery.
Battery replacement (see figure 9) is required, if the battery symbol ❸ appears on the display ❶.
Proceed as follows to replace the battery:

- Disconnect the safety measuring lines from the measuring circuit.
- Remove the safety measuring lines from the MPC 8.
- Switch the rotary switch ❽ to position „OFF“.
- Put the MPC 8 face down and unscrew the screw of the battery compartment cover.
- Lift off the battery compartment cover (in the area of the housing slots) from the bottom part of the battery compartment.
- Remove the discharged battery from the battery compartment and disconnect the battery supply lines from the battery.
- Connect the new battery to the battery supply lines and arrange them in such a way that they are not crushed between the housing parts. Then, place the battery into the battery compartment at the provided place.
- Lock the battery compartment cover into place on the bottom part and tighten the screws.

See figure 9: Battery replacement

⚠ **Make your contribution for environmental protection! Do not dispose of discharged batteries via the household waste. Instead, return them to a collecting point for discharged batteries or spezial waste. Please look for information in your community‘s facilities.**

9.4 Calibration

To maintain accuracy of the measuring results, the device must be recalibrated in regular intervals by our factory service. We recommend recalibrating the device once a year. For this purpose, send the device to the following address:

Benning Elektrotechnik & Elektronik GmbH & Co. KG
Service Center
Robert-Bosch-Str. 20
D - 46397 Bocholt

10. Technical data of measuring accessories
4 mm safety measuring line ATL 2

- Standard: EN 61010-031,
- Maximum rated voltage to earth (⏚) and measuring category: 1000 V CAT III, 600 V CAT IV,
- Maximum rated current: 10 A,
- Protection class II (⧈), continuous double or reinforced insulation,
- Contamination class: 2,
- Length: 1.4 m, AWG 18,

- Ambient conditions:
  Maximum barometric height for measurements: 2000 m,
  Temperature: 0 °C to + 50 °C, humidity 50 % to 80 %
- Use the measuring lines in perfect condition and according to these operating instructions only, as otherwise the protection provided might be impaired.
- Replace the measuring lines, if the insulation is damaged or if the conductor/ connector is interrupted.
- Do not touch the bare contact tips of the measuring lines. Only touch the area intended for your hands!
- Insert the bent terminals into the testing or measuring device.

11. Environmental protection



At the end of product life, dispose of the unserviceable device via appropriate collecting facilities provided in your community.