Bluebird installation procedure to follow

Starting point is a full CFT installation (Cool Flow Technology) including a Bluebird Coupler (BBC).

To install Bluebird you have to be:

- experienced with installing CFT
- experienced with Tube-in-Tube python, CFT column and CFT compensator tap (recommended)
- experienced with CO2 equipment and CO2 safety in general
- familiar with the Bluebird Coupler (BBC) and the installation instruction for this coupler (separate manual)
- familiar with the Bluebird Disposable (BBD) and Bluebird 20L Steel keg

System overview

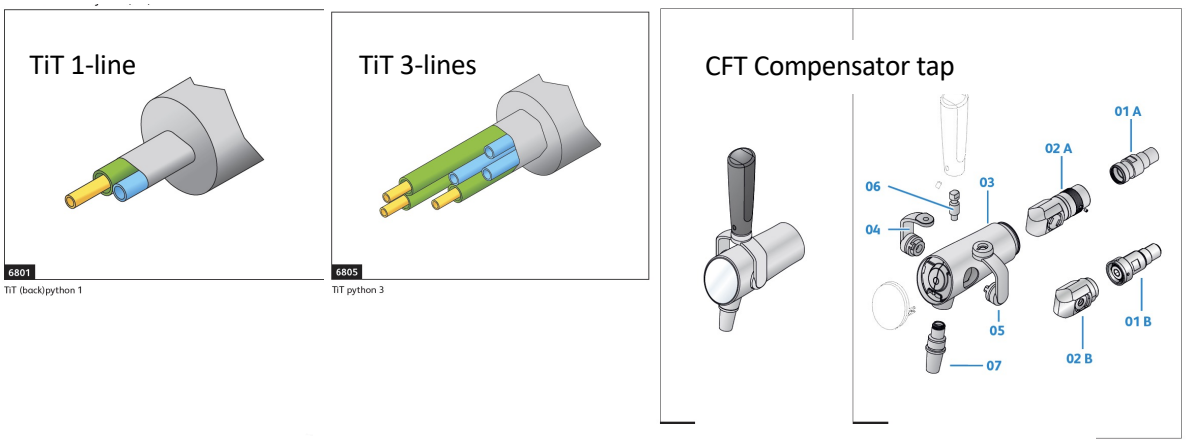

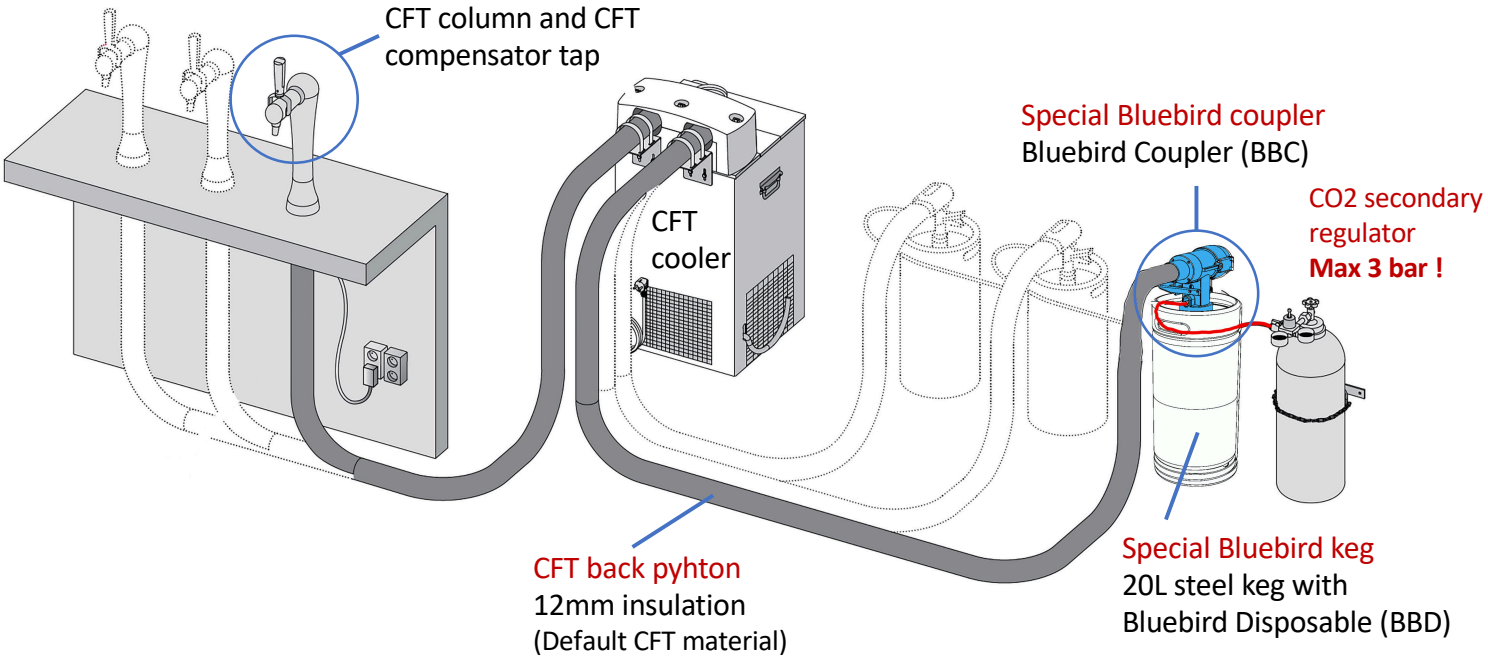

- The draught system must be cleaned after installation
- Strongly recommended to use Desanamax CL as cleaning agent
- Always wear personal protective equipment (gloves & glasses)
- Work clean & hygienic

CO2 safety instructions

- Make sure a secondary CO2 regulator is placed
- The secondary regulator can supply max 3.0 bar to the BBC
- It should never be possible to increase the pressure >3 bar
- Mixed gas is allowed with max 3 bar pressure setting
- Using a beer pump is not allowed

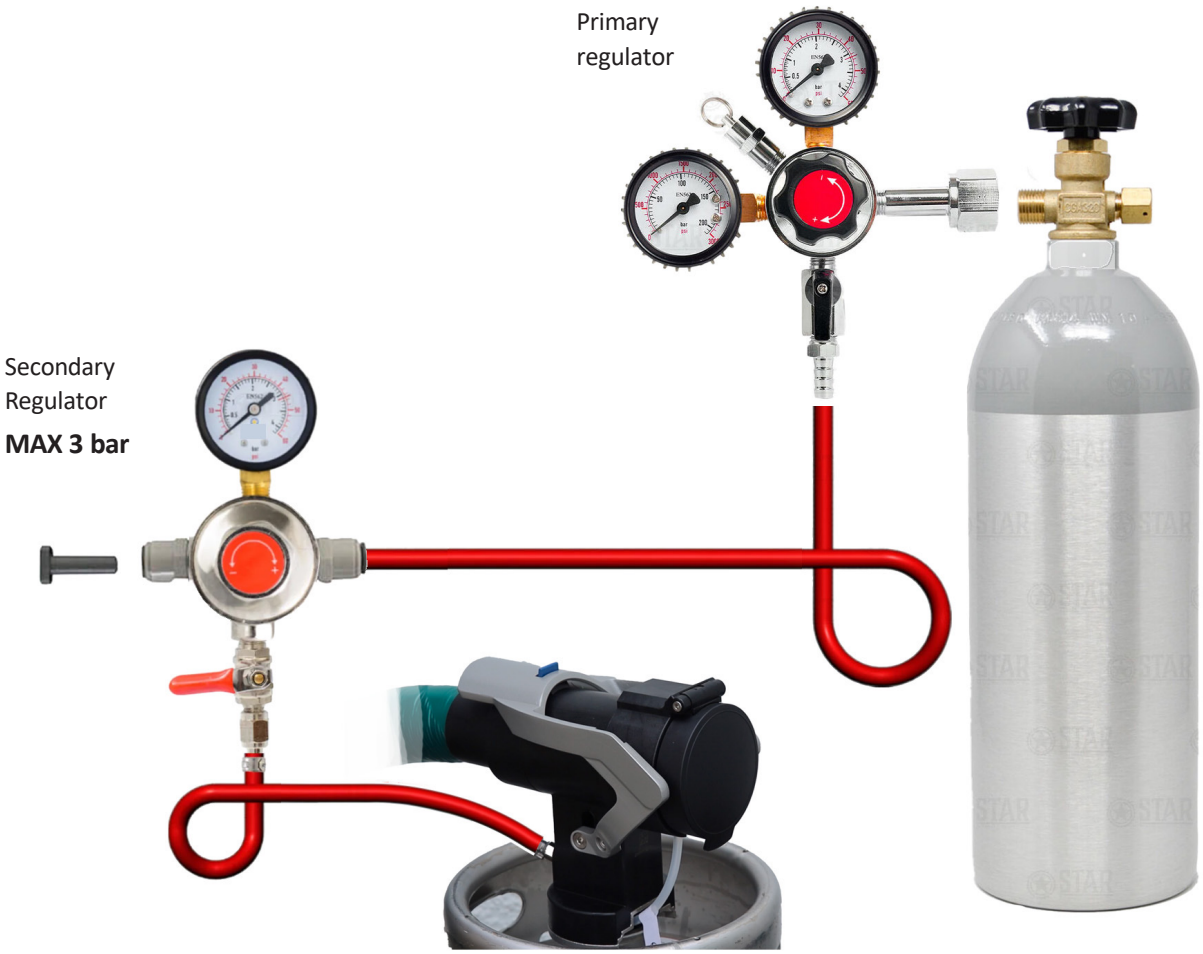

- The draught system must be cleaned after installation
- Strongly recommended to use Desanamax CL as cleaning agent
- Always wear personal protective equipment (gloves & glasses)
- Work clean & hygienic

System installation procedure to follow

1. **INSTALL the CFT system**
2. **INSTALL the BBC (Bluebird Coupler) to the back python**
   (see also separate manual)
3. **PLACE the Bluebird cleaning adapter**
4. **RUN a full line cleaning of the draught system according standard CFT procedure**
5. **CLEAN the BBC outside**
6. **CLEAN the BBC inside**
7. **CONNECT a new keg**

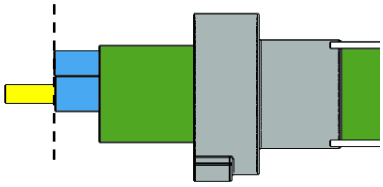

Cutting line for the water tubes

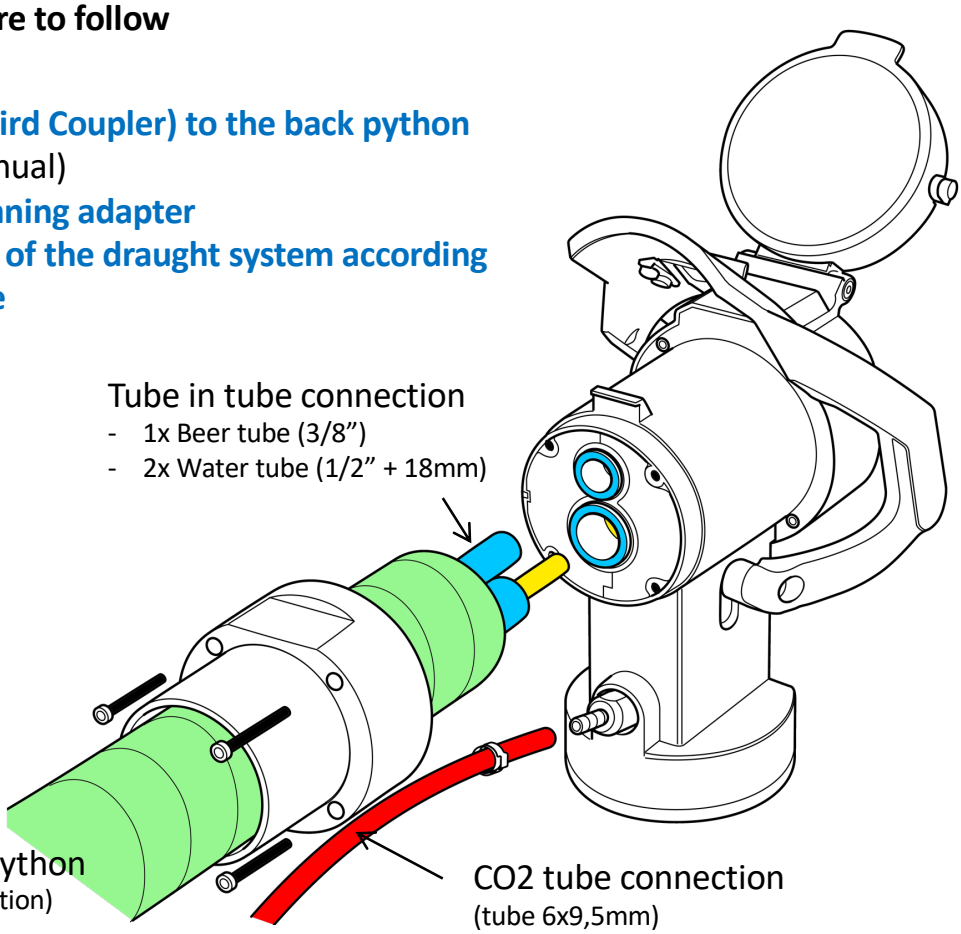

Right way to connect the CFT back python

1. Disconnect the back python at cooler side
2. Cut the water tubes to equal length **at coupler side**
3. Push in the beertube **at coupler side**
4. Push in the watertubes **at coupler side**
5. Connect beer- and water tubes at cooler side
6. Run a pressure test before closing the insulation





After installing the BBC
Place the cleaning disc to clean the system

Do not place the coupler on the ground
Be careful to avoid impact damage on the BBC.

- The draught system must be cleaned after installation
- Strongly recommended to use Desanamax CL as cleaning agent
- Always wear personal protective equipment (gloves & glasses)
- Work clean & hygienic

6. Clean the BBC inside

6a. Check inside (see picture)

6b: Remove dirt from the marked areas using water and disposable tissues

6c: Spray with 70% Ethyl Alcohol or Keg sanitizer. Let dry for 5 minutes

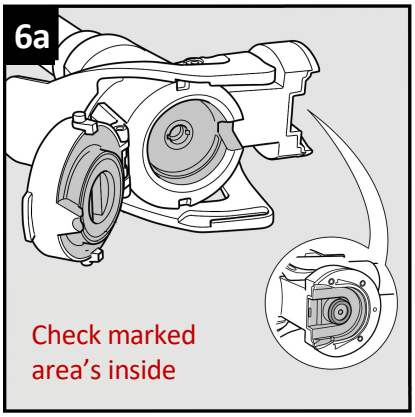

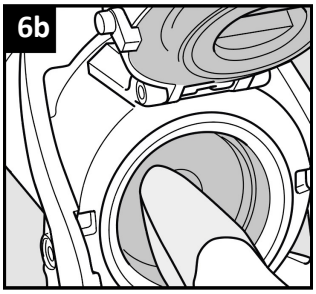

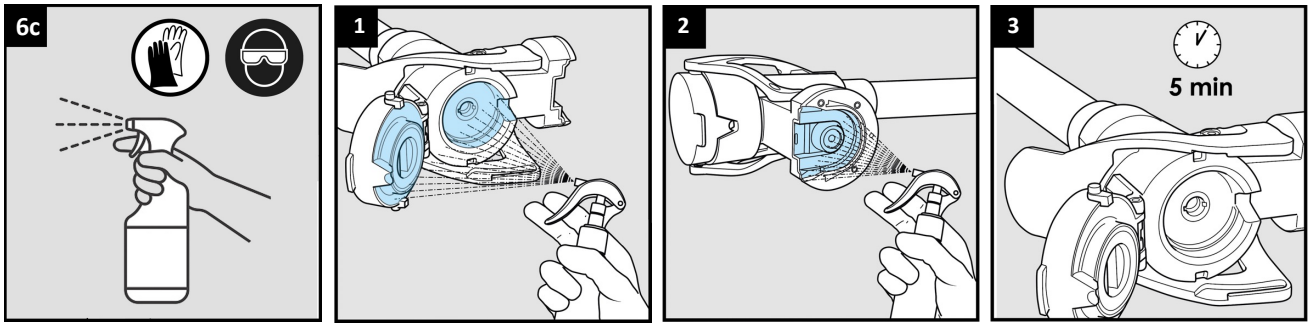

For removal of the Piston see maintenance & repair manual

7. Connect a new keg

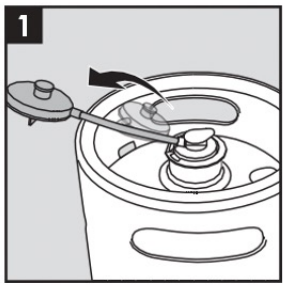

Fold out the beer disc

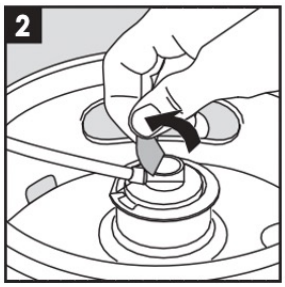

Remove Alu foil seal

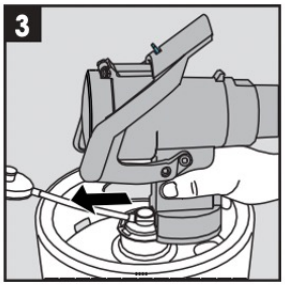

Slide coupler on keg

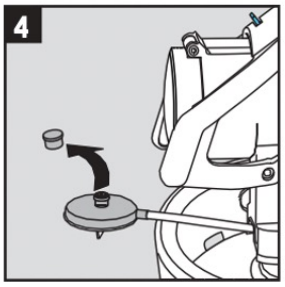

Remove protective cap

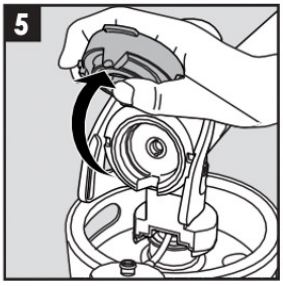

Open the door

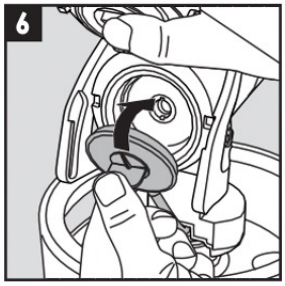

Insert the beer disc

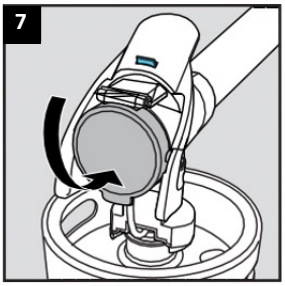

Close the door

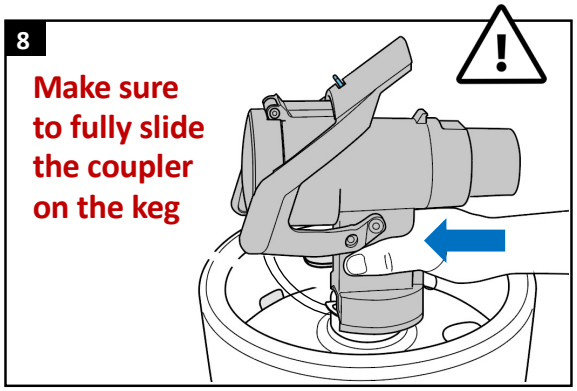

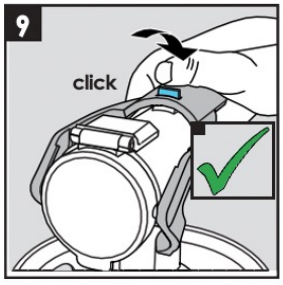

Push down the handle to active the keg (auto lock)

- The draught system must be cleaned after installation
- Strongly recommended to use Desanamax CL as cleaning agent
- Always wear personal protective equipment (gloves & glasses)
- Work clean & hygienic