CHEM-FEED® C-600P SERIES

Diaphragm Metering Pump

C-600P Standard Features:

- Easy access, side mounted mechanical output rate adjustment.
- Double-ball inlet and outlet cartridge type ceramic check valves. PVDF valve body and fitting, ceramic balls, Viton and TFE/P o-rings.
- Superior pump head design of precision molded polypropylene.
- Teflon coated EP diaphragm.
- All ball bearing, permanently lubricated gear motor for smooth, powerful operation.
- Polypropylene injection check valve with Viton and TFE/P o-rings and spring loaded ceramic ball seal.
- PVDF suction (foot) valve with Viton and TFE/P o-rings, ceramic check ball and removable polypropylene filter screen.
- Includes 3/8" OD suction and discharge tubing, and all mounting hardware.
- Efficient, dependable design - each unit is factory tested.
- Private labeling for volume purchasers.

C-600P Specifications:

Max. Working Pressure ... 125 psig (8.6 bar)
Max. Fluid Temperature .. 130° F (54° C)
Ambient Temp Range ..... 14° to 110°F (-10° to 43° C)
Max. Viscosity .....1000 Centepoise
Max. Suction Lift .....10 ft. water
Output accuracy .....+/- 10% of max. (water 0 psi, 5' suction lift)
Turndown ratio ..... 27:1 Standard models
Amperage Draw ..... 115V/60Hz .....starting .74 / running .45
230V/60Hz .....starting .36 / running .21
24V/60Hz .....starting 3.4 / running 2.0
220V/50Hz .....starting .31 / running .19
12VDC .....3.0 amp max
Dimensions ..... 6-1/2" H x 6-5/8" W x 5-3/8" D
Approx. shipping weight... 8 lb. (3.6 kg)



C-630P-115VAC

See instruction manual at www.blue-white.com for detailed installation and operating requirements.

ORDERING INFORMATION

Standard models with Stroke Adjustment

Maximum Output at 0 PSI				Max	115V/60Hz MODELS	230V/60Hz MODELS	220V/50Hz MODELS*	24V/60Hz MODELS
GPD	GPH	LPH	OZ/MIN	PSI	Model Number	Model Number	Model Number	Model Number
24	1.0	3.8	2.7	125	C-614P-115VAC	C-614P-230VAC	C-614P-220VAC	C-614P-24VAC
58	2.4	9.3	5.2	125	C-630P-115VAC	C-630P-230VAC	C-630P-220VAC	C-630P-24VAC
91	3.8	14.9	8.1	80	C-645P-115VAC	C-645P-230VAC	C-645P-220VAC	C-645P-24VAC
110	4.6	17.4	9.8	60	C-660P-115VAC	C-660P-230VAC	C-660P-220VAC	C-660P-24VAC
237	9.9	37.0	21.1	30	C-6125P-115VAC	C-6125P-230VAC	C-6125P-220VAC	C-6125P-24VAC
389	16.2	61.4	34.6	10	C-6250P-115VAC	C-6250P-230VAC	C-6250P-220VAC	C-6250P-24VAC

*** Note: 220V/50Hz models deliver approximately 20% less output.**
12V DC models are also available. Please contact the factory for ordering information.

Additional Modifications

Option Number	Description
13C	Teflon coated Viton diaphragm
05	Power cord with plug
16	Power switch
29	1 minute, 115V cycle timer
46	1 minute, 220/230V cycle timer
53	Clear acrylic pumphead
18	Teflon pumphead & accessories

C-600P Output vs. Pressure Curve:

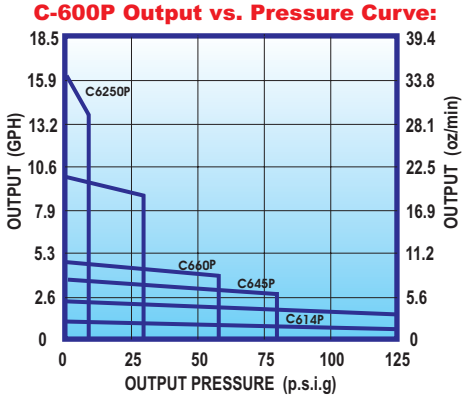

C-600P Replacement Parts List

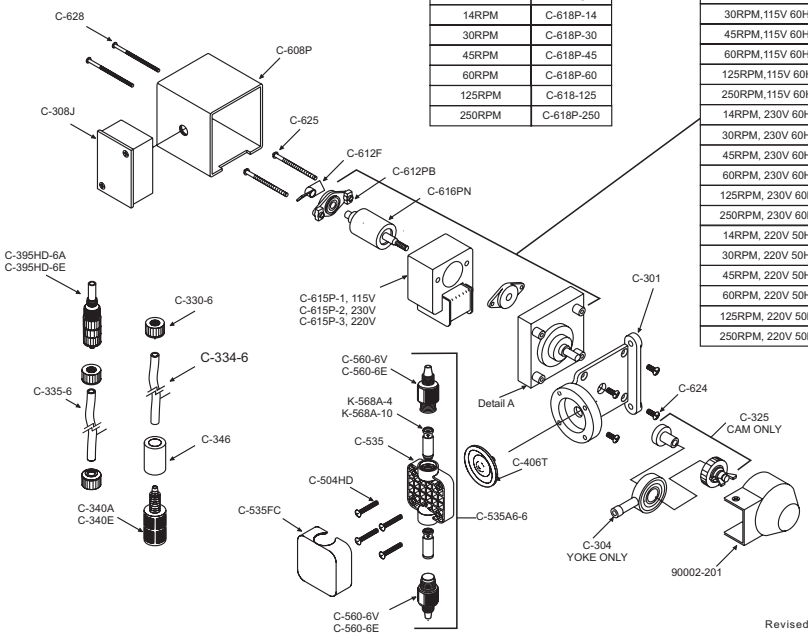

Detail A	
Gearbox	Catalog #
14RPM	C-618P-14
30RPM	C-618P-30
45RPM	C-618P-45
60RPM	C-618P-60
125RPM	C-618-125
250RPM	C-618P-250

Gear Motor	Catalog #
14RPM,115V 60Hz	C-642P-14
30RPM,115V 60Hz	C-642P-30
45RPM,115V 60Hz	C-642P-45
60RPM,115V 60Hz	C-642P-60
125RPM,115V 60Hz	C-642P-125
250RPM,115V 60Hz	C-642P-250
14RPM, 230V 60Hz	C-643P-14
30RPM, 230V 60HZ	C-643P-30
45RPM, 230V 60Hz	C-643P-45
60RPM, 230V 60Hz	C-643P-60
125RPM, 230V 60Hz	C-643P-125
250RPM, 230V 60Hz	C-643P-250
14RPM, 220V 50Hz	C-644P-14
30RPM, 220V 50HZ	C-644P-30
45RPM, 220V 50Hz	C-644P-45
60RPM, 220V 50Hz	C-644P-60
125RPM, 220V 50Hz	C-644P-125
250RPM, 220V 50Hz	C-644P-250

Revised 10-20-2004

Blue-White Industries . (714) 893-8529 . Fax (714) 894-9492 . sales@blue-white.com