VIDEO MANAGEMENT SOLUTIONS

USER MANUAL

VMS-CD-E-VZ

1080p Ultra-WDR Mini Dome IP Camera

This guide is for quick installing and connecting the Full HD Multi-Streams Ultra-WDR Mini Dome IP Camera. For more details, please refer to the User's Manual of the camera in the supplied CD.

Camera's Connectors (Indoor Only)

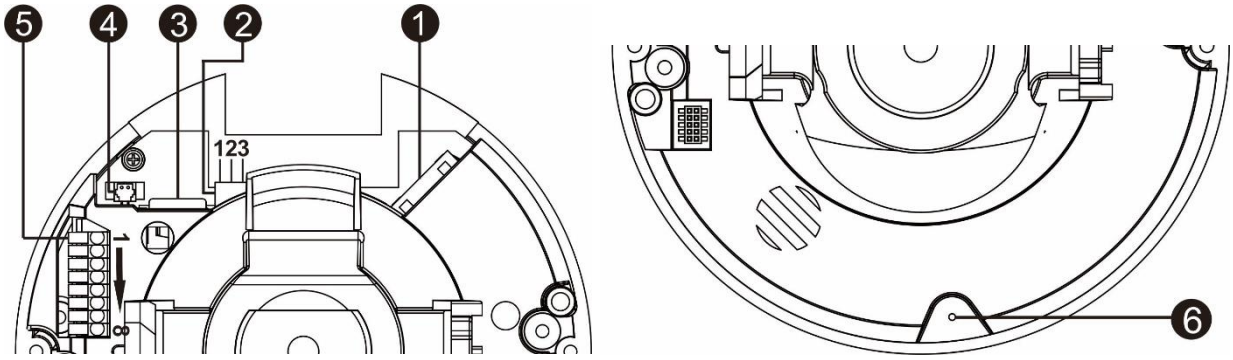

No.	Connector	Pin	Definition		Remarks
1	**RJ-45**	-	For network and PoE connections		
2	**Power (DC 12V / AC 24V)**	1	DC 12V	AC 24V 1	Power connection
		2	DC 12V Reserved	AC 24V GND	
		3	DC 12V GND	AC 24V 2	
3	**microSD Card Slot**	-	Insert the microSD card into the card slot to store videos and snapshots. Do not remove the microSD card when the camera is powered on.		
4	**BNC ***	-	For analog video output		
5	**Alarm & Audio I/O**	1	Alarm In –		Alarm connection
		2	Alarm In +		
		3	Alarm Out –		
		4	Alarm Out +		
		5	Audio Out L		Audio Out
		6	Audio Out R		
		7	GND		
		8	Audio In		
6	**Default Button**	-	Press the button for at least 20 seconds with one finger to restore the system to factory default settings.		

(*) Optional

NOTE: It is not recommended to record with the microSD card for 24/7 continuously, as it may not be able to support long term continuous data read/write. Please contact the manufacturer of the microSD card for information regarding the reliability and the life expectancy.

Camera Cabling

Please follow the instructions below for cable connections.

Power Connection

Please use a DC 12V / AC 24V power adaptor and plug it to the camera and the power outlet. Alternatively, users can use an Ethernet cable and connect it to the RJ-45 connector of the camera and a Power Sourcing Equipment (PSE) switch.

NOTE: If PoE is used, make sure PSE is in used in the network.

Ethernet Cable Connection

Connect one end of the Ethernet cable to the RJ-45 connector of the camera, and plug the other end of the cable to the network switch or PC.

NOTE: In some cases, Ethernet crossover cable might be needed when connecting the camera directly to the PC.

NOTE: Check the status of the link indicator and the activity indicator LEDs. If the LEDs are unlit, please check the LAN connection.

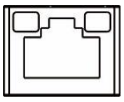

Green Link Light indicates good network connection.
Orange Activity Light flashes for network activity indication.

Function Cables (Outdoor Only)

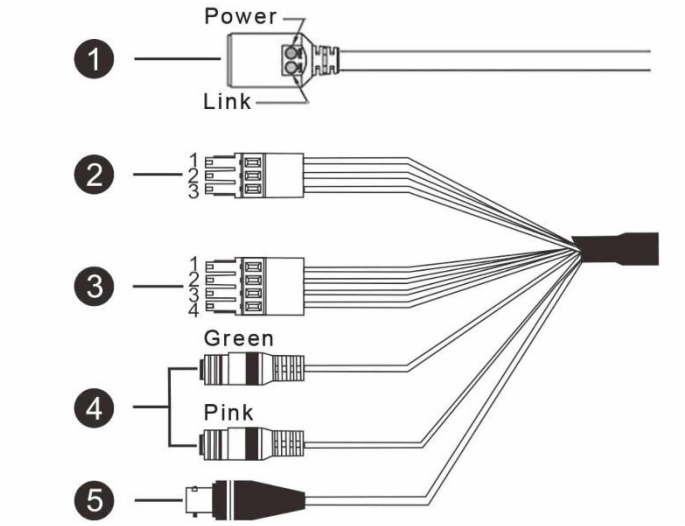

No.	Connector	Pin	Definition	Remarks
1	**RJ-45**	-	For network and PoE connections	
2	**Power (DC 12V / AC 24V)**	1	DC 12V – / AC 24V 1	Power connection
		2	GND	
		3	DC 12V + / AC 24V 2	
3	**Alarm I/O (4-Pin Terminal Block)**	1	Alarm In –	Blue
		2	Alarm In +	Green
		3	Alarm Out –	Yellow
		4	Alarm Out +	Orange
4	**Audio I/O**	Green	Audio Out	Two-way audio transmission
		Pink	Audio In	
5	**BNC**	-	For analog video output	
-	**Default Button**	-	Please refer to Default Button in the table under Camera's Connectors (Indoor Only).	

Before Login to the Camera

A client program will be automatically installed to the PC when connecting to the camera. Before logging in to the camera, please ensure downloading the ActiveX control is allowed by either changing the ActiveX controls and plug-ins or setting Internet's security level to default. For further details, please refer to the User's Manual in the supplied

CD.

ActiveX Controls and Plug-ins Settings	Internet Security Level
Step 1: Start the Internet Explorer (IE). **Step 2:** Select <Tools> from the main menu of the browser. Then click on <Internet Options>. **Step 3:** Click on the <Security> tab and select <Internet>, and click on <Custom level> to change ActiveX settings. **Step 4:** Set "ActiveX controls and plug-ins" items to <Prompt> or <Enable>.	**Step 1:** Start the Internet Explorer (IE). **Step 2:** Select <Tools> from the main menu of the browser. Then click on <Internet Options>. **Step 3:** Click on the <Security> tab and select <Internet>. **Step 4:** Down the page, click <Default Level> and click on <OK> to confirm the setting. Close the browser window, and open a new one later for accessing the IP camera.

Camera Login

The default IP address of the camera is: **192.168.0.250**. Therefore, to access the camera for the first time, please set the IP address of the PC as: 192.168.0.XXX; for example:

IP Address: 192.168.0.100
Subnet Mask: 255.255.255.0

Login ID and Password

- Key in the camera's IP address in the URL bar of the web browser window and hit on "Enter".
- Enter the default username (**Admin**) and password (**1234**) in the prompt request dialogue. Note that username is case sensitive.

Install the ActiveX Control

- After connecting to the camera, the request for installing the ActiveX control will appear just below the URL bar.
- Right click on the information bar, and then click on <Install ActiveX Control…> to permit ActiveX control installation.



- In the pop-up security warning window, click on <Install> to start downloading DC Viewer software on the PC.
- Click on <Finish> after DC Viewer installation is completed.

Browser-based Viewer

The main page of the IP camera user interface is shown as the figure below. Please note that function buttons will vary depending on the camera model.



NSW - Silverwater

Unit 4, 52 Holker Street
Silverwater NSW 2128
E:vmssales@opticalsolutions.com.au
P: +61 2 9395 1400
F: +61 2 9647 0014

VIC

Unit 3 / 1 Rocklea Drive
Port Melbourne VIC 3207
E: vmssales@opticalsolutions.com.au:
P: +61 3 9646 4166
F: +61 3 9646 4155

ACT

22 Isa Street
Fyshwick ACT 2609
E:vmssales@opticalsolutions.com.au
P: +61 2 6162 4600
F: +61 2 6162 4605

NSW - Sydney City

Unit 10, 10 Bradford Street
Alexandria NSW 2015
E: vmssales@opticalsolutions.com.au
P: +61 2 9304 4555
F: +61 2 9700 8055

QLD

Unit 2/ 40 Borthwick Ave
Murarrie QLD 4172
E: vmssales@opticalsolutions.com.au
P: +61 7 3399 5280
F: +61 7 3399 9805

WA

28a Teddington Rd
Burswood WA 6100
E: vmssales@opticalsolutions.com.au
P: +61 8 9361 7000
F: +61 8 9361 7011

OSA OPTICAL SOLUTIONS AUSTRALIA

3 Years Advanced Replacement Warranty (Conditions Apply) Ph: 1300 130 423