THE IMAGINGSOURCE
TECHNOLOGY BASED ON STANDARDS

DMK 33UP1300 Monochrome Camera

The Imaging Source "33" Series USB 3.0 Camera

Pyramid Imaging
945 East 11th Avenue Tampa, FL 33605
sales@pyramidimaging.com
www.pyramidimaging.com
813-786-3785



Only 29×29×43 mm

Lens not included

The Imaging Source DMK 33UP1300 monochrome camera has a USB 3.0 interface and is the perfect solution for many industrial automation, quality assurance, security, surveillance and medical applications. The monochrome camera ships with the very sensitive 1/2 inch ON Semiconductor CMOS Python PYTHON 1300 sensor. With up to 168 images per second, the DMK 33UP1300 is a low cost, yet highly versatile imaging solution. The camera includes a C to CS mount adapter, making it compatible to C and CS mount lenses. Using the optional CS to M12 board lens adapter, the camera is also compatible to M12 board lenses.

The Imaging Source authors and supports drivers, SDKs, extensions and end-user software for Microsoft Windows, which can be freely downloaded from our web site. Extensions for Microsoft Windows enable the DMK 33UP1300 to be integrated in to common machine vision software libraries, such as LabView and OpenCV. Furthermore, we author and support open source Linux drivers and software (Apache License 2.0) to integrate the camera into popular distributions. Download the Linux source code at GitHub.

Features

- USB 3.0 interface
- 1/2 inch ON Semiconductor CMOS Python sensor (PYTHON 1300)
- 1,280×1,024 (1.3 MP)
- Up to 126 images per second
- Global shutter
- Trigger and I/O inputs
- Only 29×29×43 mm
- Compatible to C and CS mount lenses
- Manufactured by The Imaging Source
- Ships with Windows and Linux software

Accessories

- CS to C mount adapter (shipped as standard)
- C and CS mount lenses
- CS to M12 board lens adapters
- M12 board lenses
- Standard USB 3.0 cable in various lengths
- 3 m USB 3.0 cable with fixing screws
- Trigger cable

Device Drivers for Microsoft Windows

Device Driver for USB Cameras

Software Development Kits (SDKs) for Microsoft Windows

IC Imaging Control .NET Component for C#, VB.NET, C++ Class Library for C++ projects, IC Imaging Control C Library, IC Imaging Control ActiveX, IC Imaging Control ActiveX Runtime Setup

Extensions for Microsoft Windows

TWAIN Source for IC Imaging Control, Cognex VisionPro AIK Plugin for IC Imaging Control, LabVIEW Extension for IC Imaging Control, IC Matlab Plugin for Matlab 10.0 R2010, IC Matlab Plugin for Matlab R2013b and higher versions, IC NeuroCheck Driver for NeuroCheck 6.0, IC NeuroCheck Driver for NeuroCheck 6.1

End User Software for Microsoft Windows

IC Capture - image acquisition, IC Measure - manual on-screen image measurement and image acquisition, IC Fullscreen Presenter, IC Line Profiler, Footswitch software for IC Capture, Scan2Docx, Scan2Docx OCR, Scan2Voice

THE IMAGINGSOURCE
TECHNOLOGY BASED ON STANDARDS

DMK 33UP1300 Specification

GENERAL BEHAVIOR	
Dynamic range	8/12 bit
Video formats @ frame rate (maximum)	1,280×1,024 (1.3 MP) Y800 @ 168 fps 1,280×1,024 (1.3 MP) Y16 @ 126 fps

INTERFACE (OPTICAL)	
IR cut filter	✖
Sensor type	CMOS Python
Sensor specification	On Semiconductor PYTHON 1300
Shutter	global
Format	1/2 inch
Resolution (maximum)	H: 1,280 px, V: 1,024 px
Frame rate (maximum)	168 fps
Pixel size	H: 4.8 µm, V: 4.8 µm
Lens mount	C/CS

INTERFACE (ELECTRICAL)	
Interface	USB 3.0
Supply voltage	4.5 VDC to 5.5 VDC
Current consumption	approx 250 mA @ 5 VDC
Auto iris control	✖
Trigger	✔
I/Os	✔

INTERFACE (MECHANICAL)	
Dimensions	H: 29 mm, W: 29 mm, L: 43 mm
Mass	65 g

ADJUSTMENTS	
Shutter	50 µs to 10 s
Gain	0 dB to 9.2 dB

ENVIRONMENTAL	
Temperature (operating)	-5 °C to 45 °C
Temperature (storage)	-20 °C to 60 °C
Humidity (operating)	20 % to 80 % (non-condensing)
Humidity (storage)	20 % to 95 % (non-condensing)

Subject to change

THE IMAGINGSOURCE
TECHNOLOGY BASED ON STANDARDS

ON Semiconductor PYTHON 1300 Spectral Response Curve

CMOS Python Sensor in DMK 33UP1300

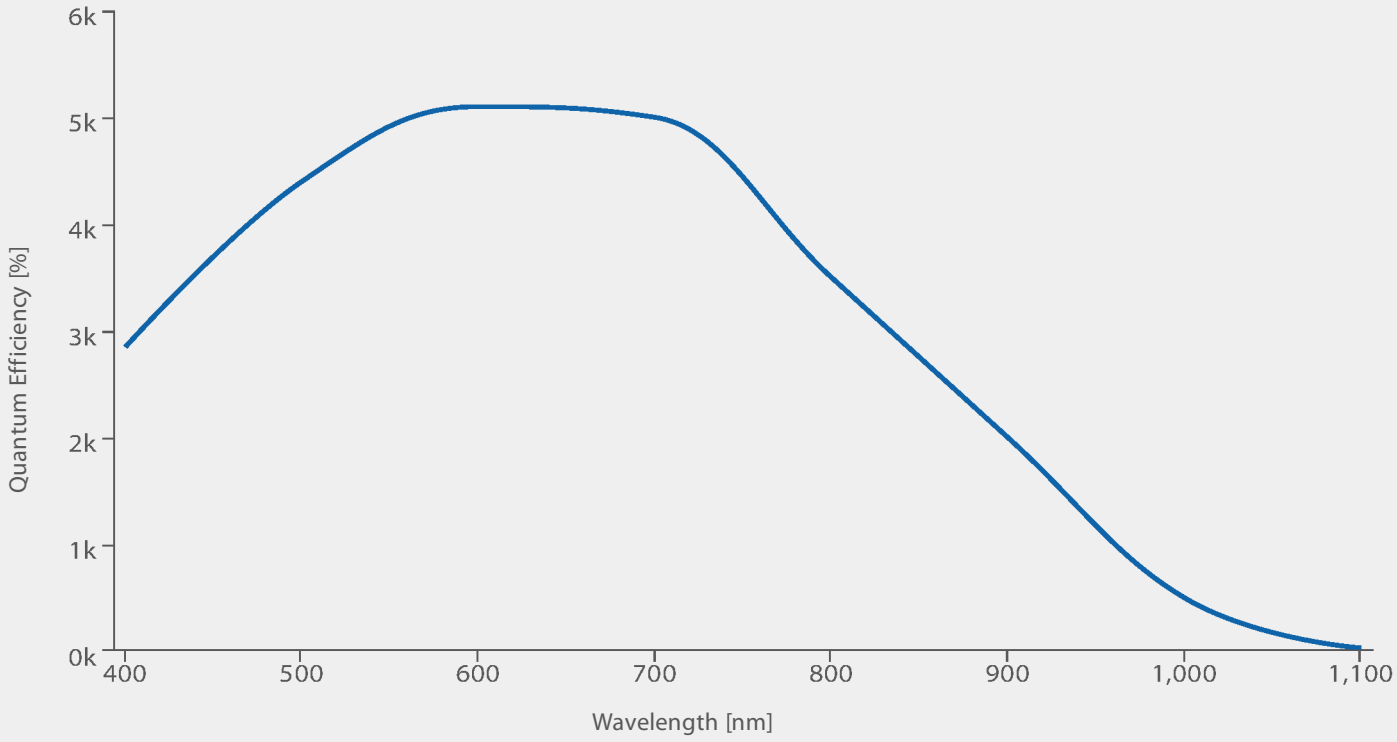

DMK 33UP1300 Dimensional Diagram

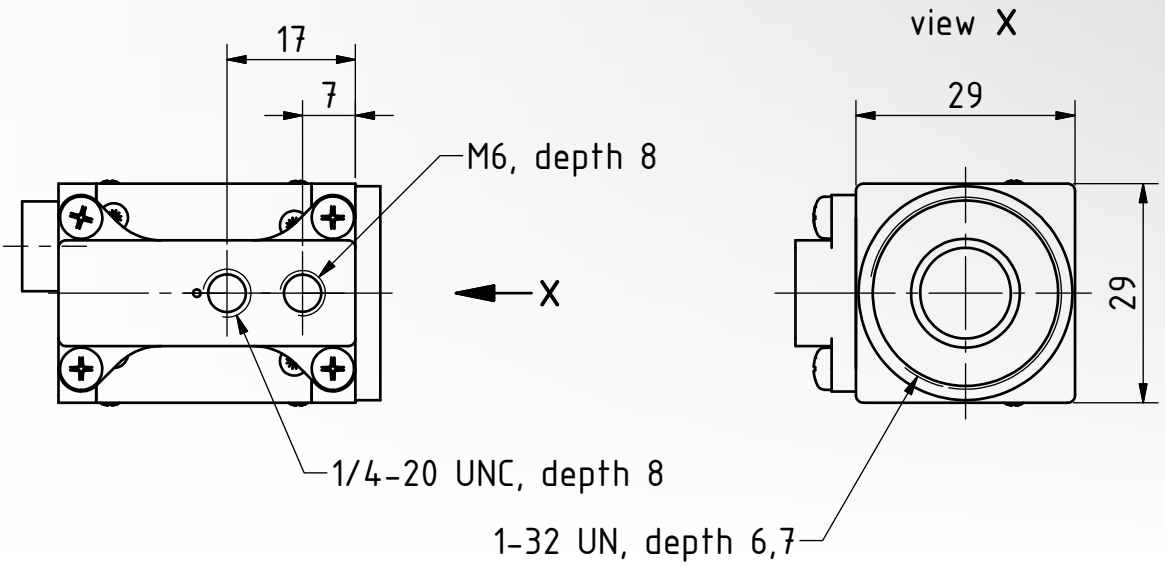

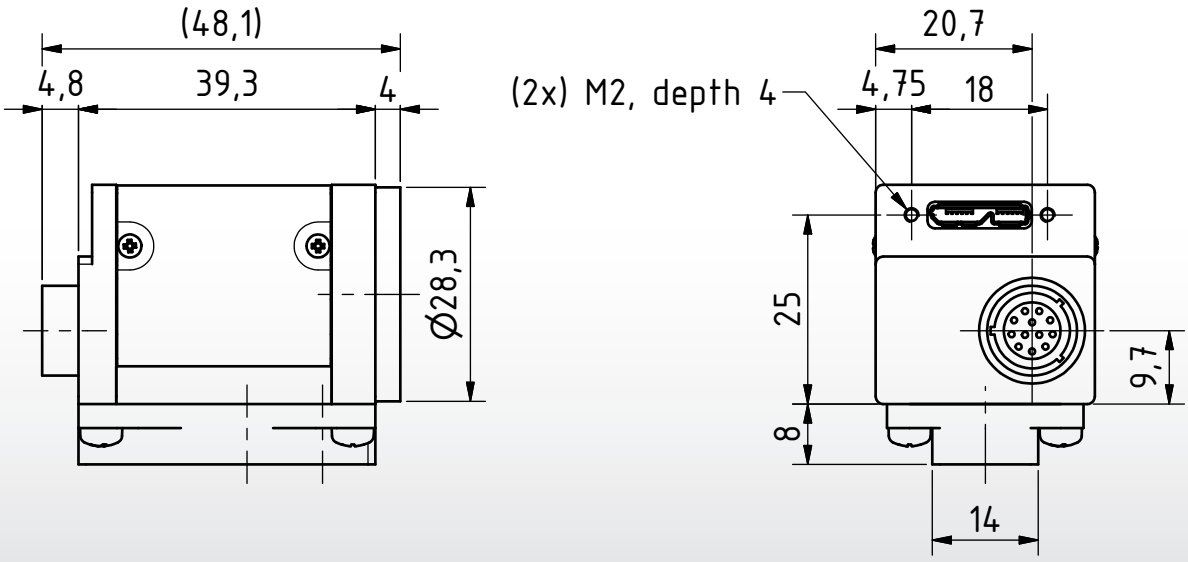

Dimensions: mm
Tolerances: DIN ISO 2768m

THE IMAGINGSOURCE
TECHNOLOGY BASED ON STANDARDS

Machine vision, designed in Germany



Ever since The Imaging Source was founded in 1990, it has been one of the leading manufacturers of industrial cameras, frame grabbers and video converters for automation, quality assurance, logistics, medicine, science and security.

Our extensive range of industrial cameras ships with USB 3.0, USB 2.0, GigE, FireWire 800 and FireWire 400 interfaces. Thanks to their multi-purpose features and extremely high quality standards, the cameras are commonly used in demanding applications.

The software support offered by the cameras fulfill the requirements of demanding end-users and programmers. The cameras can be put into operation within a few minutes, or integrated into new or existing applications with only a few lines of code. All camera drivers are Microsoft certified. The easy of which the cameras can be integrated, the corresponding low integration costs, and the high quality of the software set the industry standard.

All cameras, frame grabbers and video converters, manufactured by The Imaging Source, are the result of decades of experience, uncompromisingly high quality standards, and continual development. Developers and system engineers prefer The Imaging Source cameras due to their ease of system integration.

THE IMAGINGSOURCE
TECHNOLOGY BASED ON STANDARDS

World-Class Software and Customer Care



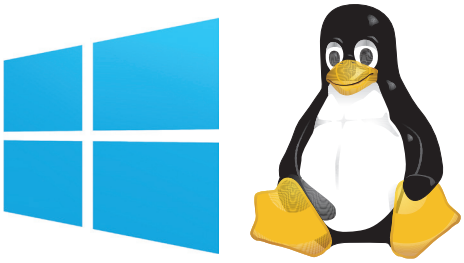

What really separates The Imaging Source from its competitors is the comprehensive Windows and Linux software available free of charge with all its products, and the unsurpassed level of customer service.

The Imaging Source authors and supports device drivers, software development kits (SDKs), programming samples, extensions, end-user software and software tools for Microsoft Windows. All Windows software can be download directly from our web site:

http://www.theimagingsource.com

Additionally, The Imaging Source authors and supports open source drivers and end-user software for Linux. The Linux source code, which is released under the Apache License 2.0, enables you to integrate all machine vision cameras into popular Linux distributions. The Open Source code is available to download from GitHub:

https://github.com

The Imaging Source guarantees fast and efficient customer service for all hardware and software issues via our skilled customer service representatives. Not only will we provide support regarding technical issues, but we will also work with you to implement our components into your project. Contact customer service at:

http://www.theimagingsource.com

THE IMAGINGSOURCE
TECHNOLOGY BASED ON STANDARDS

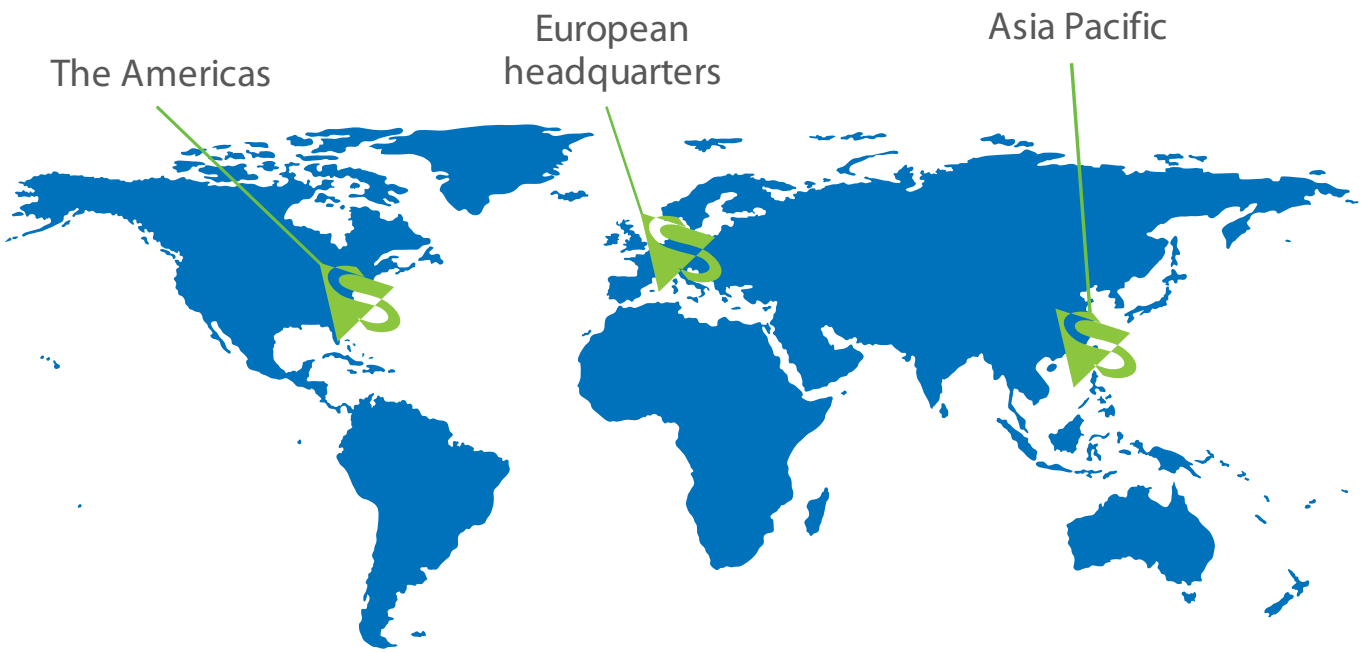

PRESENT ALL OVER THE WORLD

THE IMAGING SOURCE, LLC

Suite 400
6926 Shannon Willow Rd
Charlotte, NC 28226
United States

Tel: +1 704-370-0110
Fax: +1 704-542-0936

THE IMAGING SOURCE EUROPE GMBH

Überseetor 18
28217 Bremen
Germany

Tel: +49 421 335910
Fax: +49 421 3359180

THE IMAGING SOURCE ASIA CO., LTD.

2F., No.8, Xinhu 1st Road
Taipei City 114, Neihu District
Taiwan

Tel: +886 2 2792 3153
Fax: +886 2 2792 6583

All product and company names in this document may be trademarks and tradenames of their respective owners and are hereby acknowledged. The Imaging Source, LLC cannot and does not take any responsibility or liability for any information contained in this document. The source code in this document may be used exclusively used for educational purposes. The Imaging Source, LLC does not assume any kind of warranty expressed or implied, resulting from the use of the content of this document or the source code. The Imaging Source, LLC reserves the right to make changes in specifications, function or design at any time and without prior notice.

All weights and dimensions are approximate. Unless otherwise specified the lenses shown in the context of cameras are not shipped with these cameras.

Reprint, also in parts, only allowed with permission of The Imaging Source, LLC.

Last update: March 24, 2017 at 9:16 AM. © 2017 The Imaging Source, LLC. All rights reserved.