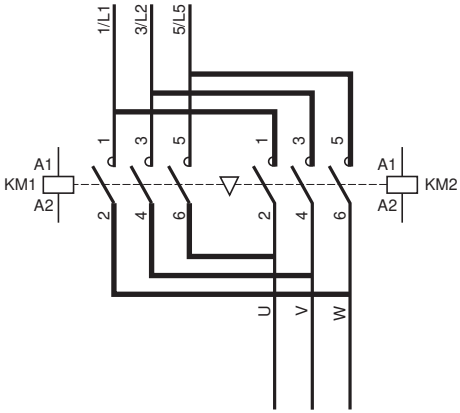
1/L1
3/L2
5/L5
1
3
5
A1
KM1
A2
2
4
6
A1
KM2
A2
U
V
W

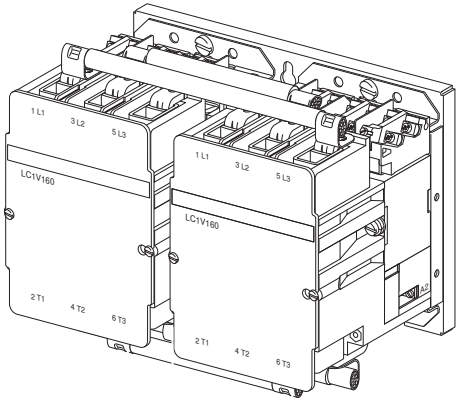
1 L1
3 L2
5 L3
LC1V160
2 T1
4 T2
6 T3

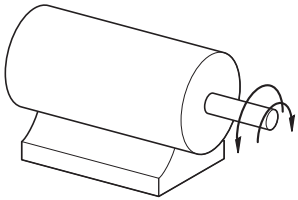

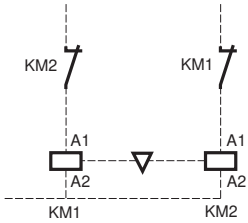
KM2
KM1
A1
A2
A1
A2
KM1
KM2

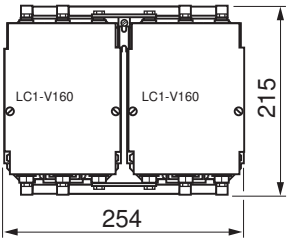
LC1-V160
LC1-V160
215
254

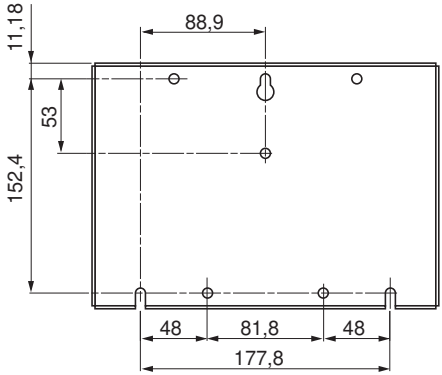
11,18
88,9
53
152,4
48
81,8
48
177,8

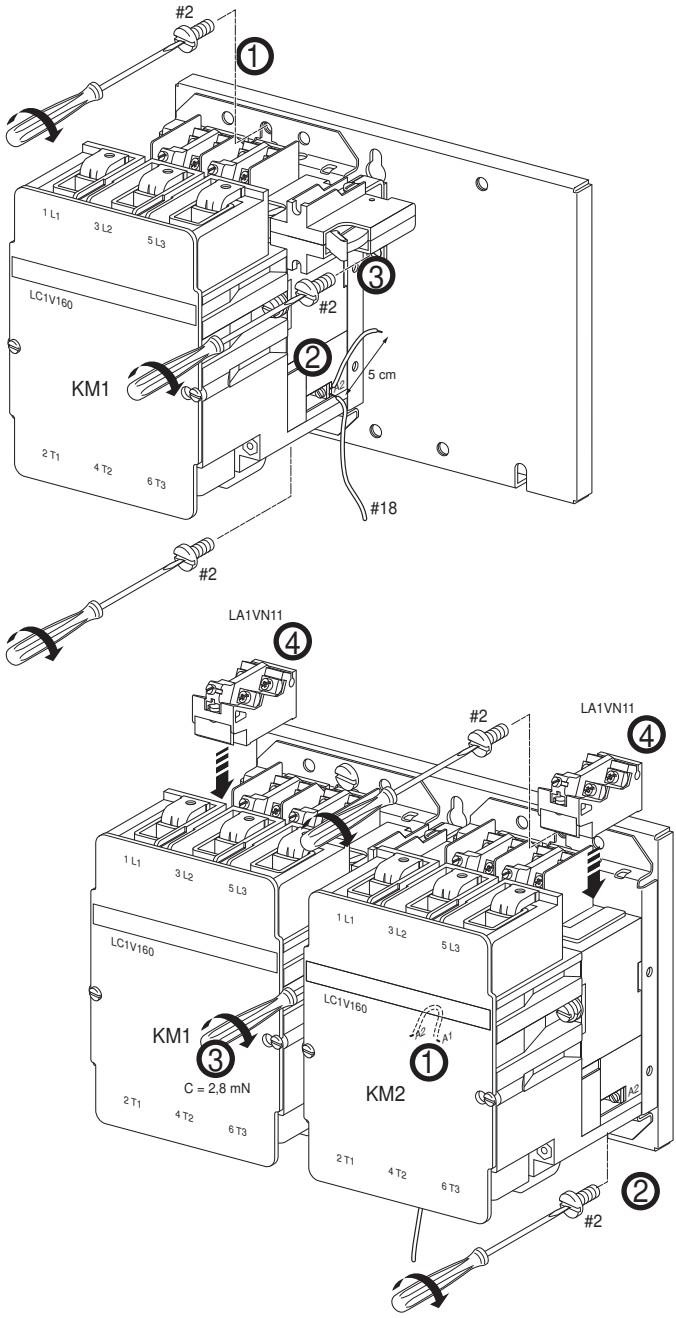
#2
1
1 L1
3 L2
5 L3
LC1V160
KM1
3
#2
2
5 cm
2 T1
4 T2
6 T3
#18
#2
LA1VN11
4
#2
LA1VN11
4
1 L1
3 L2
5 L3
LC1V160
KM1
3
C = 2,8 mN
2 T1
4 T2
6 T3
1 L1
3 L2
5 L3
LC1V160
A2
A1
1
KM2
A2
2 T1
4 T2
6 T3
2
#2

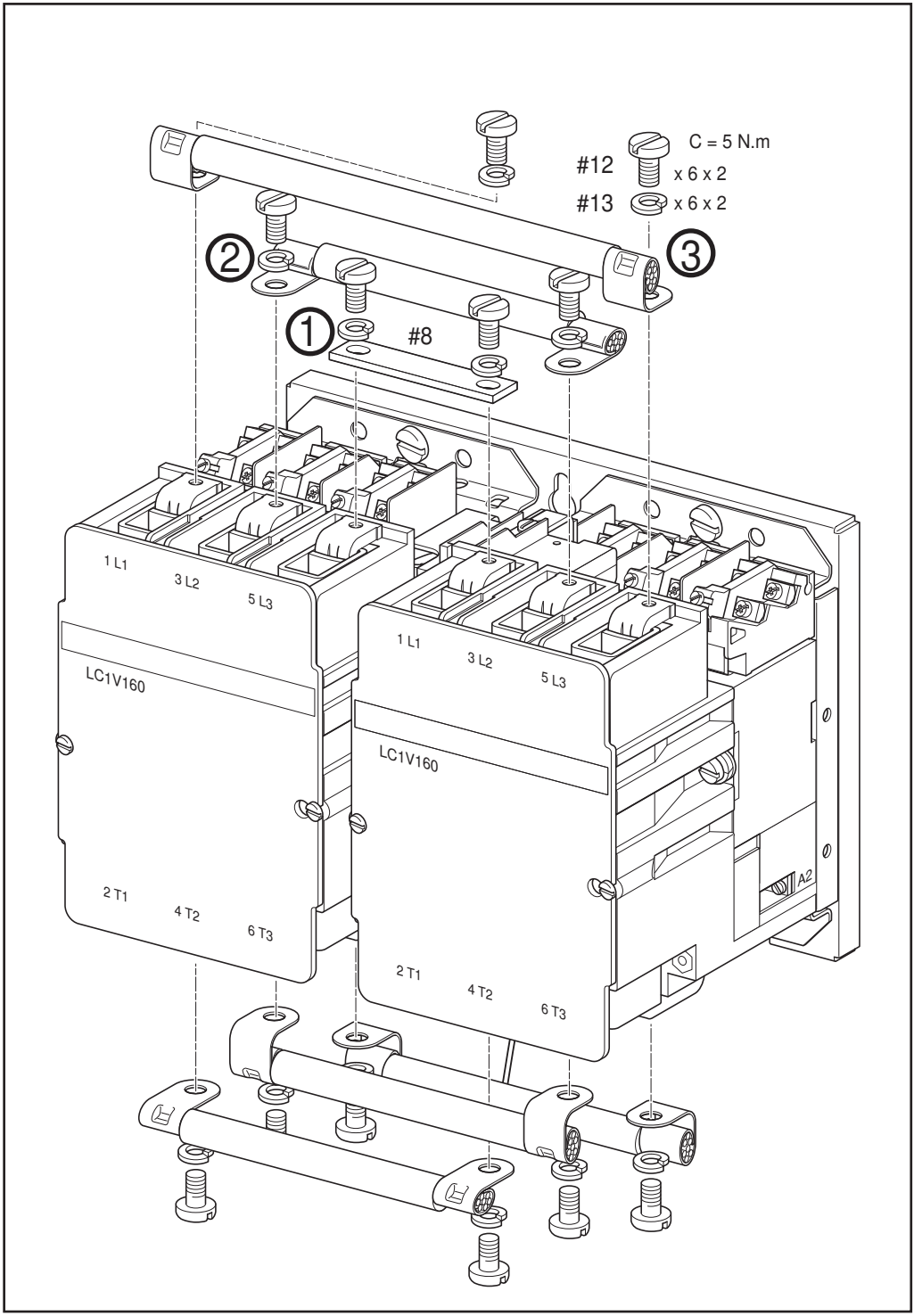
C = 5 N.m
#12
x 6 x 2
#13
x 6 x 2
②
③
①
#8
1 L1
3 L2
5 L3
LC1V160
2 T1
4 T2
6 T3
A2

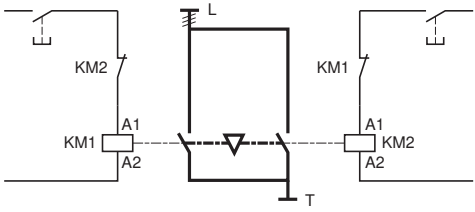

Test 1

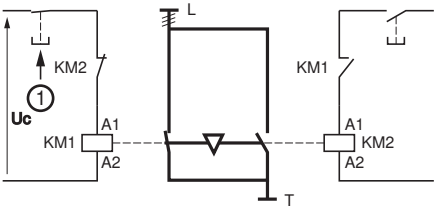

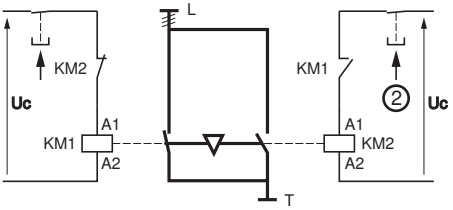

OK

Test 2

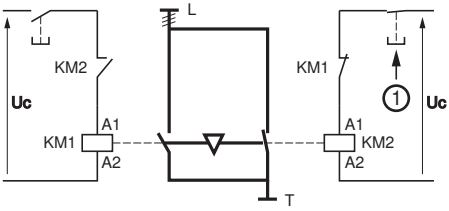

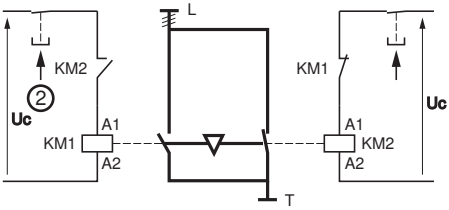

OK