trovaprezzi.it

Questo manuale d'istruzione è fornito da trovaprezzi.it. Scopri tutte le offerte per Vivitek DW832 o cerca il tuo prodotto tra le migliori offerte di Videoproiezione

vivitek®
Vivid Color, Vivid Life

User Manual

DX831
DW832
DX931
DW932
Series

PICTURE BY DLP®
TEXAS INSTRUMENTS

Copyright

This publication, including all photographs, illustrations and software, is protected under international copyright laws, with all rights reserved. Neither this manual, nor any of the material contained herein, may be reproduced without written consent of the author.

© Copyright 2015

Disclaimer

The information in this document is subject to change without notice. The manufacturer makes no representations or warranties with respect to the contents hereof and specifically disclaims any implied warranties of merchantability or fitness for any particular purpose. The manufacturer reserves the right to revise this publication and to make changes from time to time in the content hereof without obligation of the manufacturer to notify any person of such revision or changes.

Trademark Recognition

Kensington is a U.S. registered trademark of ACCO Brand Corporation with issued registrations and pending applications in other countries throughout the world.

HDMI, the HDMI Logo, and High-Definition Multimedia Interface are trademarks or registered trademarks of HDMI Licensing LLC in the United States and other countries.

MHL, the MHL logo, and Mobile High-Definition Link are trademarks or registered trademarks of MHL licensing, LLC.

All other product names used in this manual are the properties of their respective owners and are acknowledged.

Important Safety Information

⚠ ***Important:***
It is strongly recommended that you read this section carefully before using the projector. These safety and usage instructions will ensure that you enjoy many years of safe use of the projector. ***Keep this manual for future reference****.*

Symbols Used

Warning symbols are used on the unit and in this manual to alert you of hazardous situations.

The following styles are used in this manual to alert you to important information.

Note:
Provides additional information on the topic at hand.

⚠ ***Important:***
Provides additional information that should not be overlooked.

⚠ ***Caution:***
Alerts you to situations that may damage the unit.

⚠ ***Warning:***
Alerts you to situations that may damage the unit, create a hazardous environment, or cause personal injury.

Throughout this manual, component parts and items in the OSD menus are denoted in bold font as in this example:
"Push the **Menu** button on the remote control to open the **Main** menu."

General Safety Information

- Do not open the unit case. Aside from the projection lamp, there are no user-serviceable parts in the unit. For servicing, contact qualified service personnel.
- Follow all warnings and cautions in this manual and on the unit case.
- The projection lamp is extremely bright by design. To avoid damage to eyes, do not look into the lens when the lamp is on.
- Do not place the unit on an unstable surface, cart, or stand.
- Avoid using the system near water, in direct sunlight, or near a heating device.
- Do not place heavy objects such as books or bags on the unit.

Projector Installation Notice

- Place the projector in a horizontal position
  The tilt angle of the projector should not exceed 15 degrees, nor should the projector be installed in any way other than the desktop and ceiling mount, otherwise lamp life could decrease dramatically, and may lead to other ***unpredictable damages***.

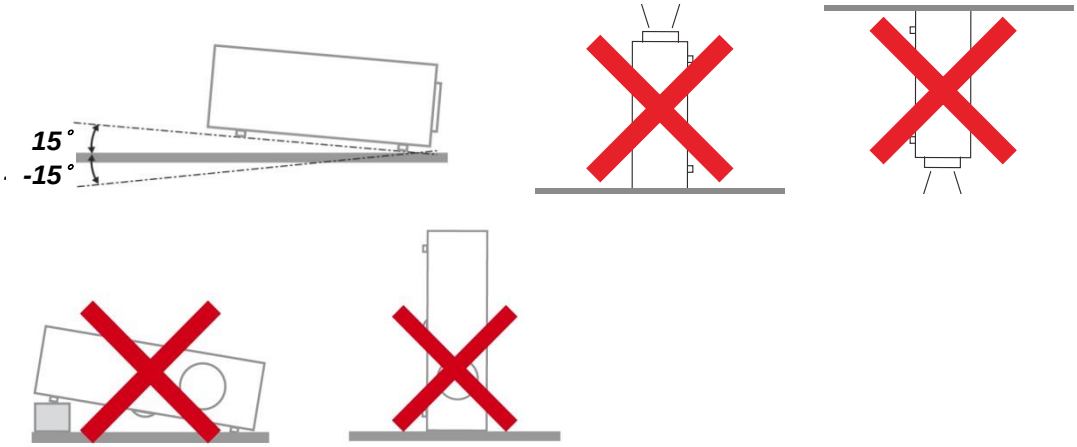

- Allow at least 50 cm clearance around the exhaust vent.

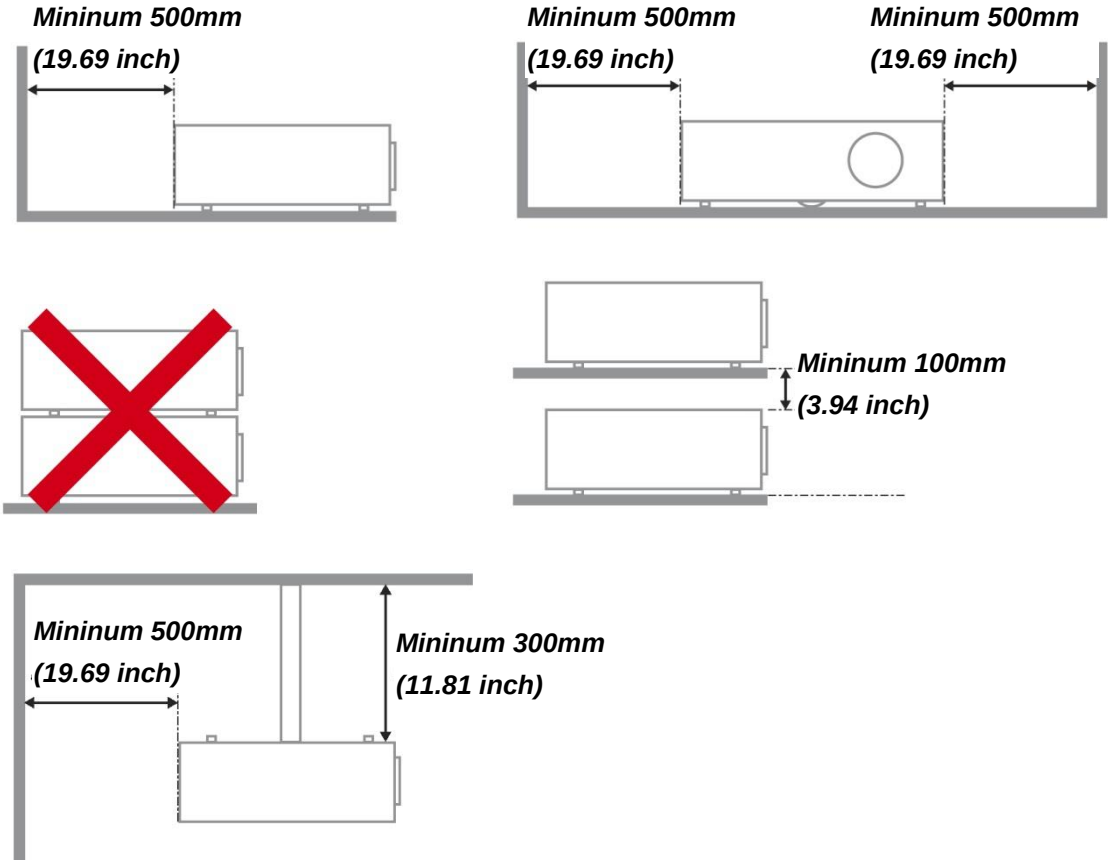

- Ensure that the intake vents do not recycle hot air from the exhaust vent.
- When operating the projector in an enclosed space, ensure that the surrounding air temperature within the enclosure does not exceed operation temperature while the projector is running, and the air intake and exhaust vents are unobstructed.
- All enclosures should pass a certified thermal evaluation to ensure that the projector does not recycle exhaust air, as this may cause the device to shutdown even if the enclosure temperature is with the acceptable operation temperature range.

Verify Installation Location

- To supply power, the 3-blade (with earthing lead) socket should be used to ensure proper grounding and equalized ground potential for all of the equipment in the Projector System.
- The power code provided with the Projector should be used. In case of any missing item, other qualified 3-blade (with earthing lead) power cord can be used as substitution; however, do not use 2-blade power cord.
- Verify if the voltage is stable, grounded properly and there is no electricity leakage.
- Measure total power consumption which should not higher the safety capacity and avoid safety issue and short circuit.
- Turn on Altitude Mode when located in high altitude areas
- The projector can only be installed upright or inverted.
- When installation the bracket, make sure the weight limit is not exceed and firmly secured.
- Avoid installing near air conditioner duct or subwoofer.
- Avoid installing at high temperature, insufficient cooling and heavy dust locations.
- Keep your product away from fluorescent lamps (> 1 meter) to avoid malfunction caused by IR interference
- The VGA IN connector should be connected to the VGA IN port. Note that it should be inserted tightly, with the screws on both sides securely fastened to ensure proper connection of the signal wire for achieving optimal display effect.
- The AUDIO IN connector should be connected to the AUDIO IN port and CANNOT be connected to AUDIO OUT or other ports like BNC, RCA; otherwise, it will lead to mute output and even DAMAGE the port.
- Install the projector above 200cm to avoid damage.
- The power cord and signal cable should be connected before power on the projector. During the projector starting and operating process, DO NOT insert or remove the signal cable or the power cord to avoid damaging the projector.

Cooling notes

Air outlet

- Make sure the air outlet is 50cm clear of any obstruction to ensure proper cooling.
- Air outlet location should not be in front of the lens of other projector to avoid causing illusions.
- Keep the outlet at least 100cm away from the inlets of other projectors
- The projector generates a massive amount of heat during use. The internal fan dissipates the heat of the projector when shutting down, and such process may continue for a certain period. After the project enters STANDBY MODE status, press the AC power button to turn off the projector and remove the power cord. DO NOT remove the power cord during the shutdown process, as it may cause damage to the projector. In the meantime, the delayed heat radiating will also affect the service life of the projector. The shutdown process may vary depending on the model used. Whatever the case may be, be sure to disconnect the power cord till after the projector enters the STANDBY status.

Air inlet

- Make sure there is no object blocking air input within 30 cm.
- Keep the inlet away from other heat sources
- Avoided heavy dust area

Power Safety

- Only use the supplied power cord.
- Do not place anything on the power cord. Place the power cord where it will not be in the way of foot traffic.
- Remove the batteries from the remote control when storing or not in use for a prolonged period.

Replacing the Lamp

Replacing the lamp can be hazardous if done incorrectly. See *Replacing the Projection Lamp* on page 48 for clear and safe instructions for this procedure. Before replacing the lamp:

- Unplug the power cord.
- Allow the lamp to cool for about one hour.

Caution:
In rare cases the lamp bulb may burn out during normal operation and cause glass dust or shards to be discharged outward from the rear exhaust vent.

Do not inhale or do not touch glass dust or shards. Doing so could result in injury.

Always keep your face away from the exhaust vent so that you do not suffer from the gas and broken shards of the lamp.

Cleaning the Projector

- Unplug the power cord before cleaning. See *Cleaning the Projector* on page 52.
- Allow the lamp to cool for about one hour.

Regulatory Warnings

Before installing and using the projector, read the regulatory notices in the *Regulatory Compliance* on page 64.

Important Recycle Instructions:

Hg Lamp(s) inside this product contain mercury. This product may contain other electronic waste that can be hazardous if not disposed of properly. Recycle or dispose in accordance with local, state, or federal Laws. For more information, contact the Electronic Industries Alliance at WWW.EIAE.ORG. For lamp specific disposal information check WWW.LAMPRECYCLE.ORG.

Symbol Explanations

DISPOSAL: Do not use household or municipal waste collection services for disposal of electrical and electronic equipment. EU countries require the use of separate recycling collection services.

Main Features

- *Lightweight unit, easy to pack away and transport.*
- *Compatible with all major video standards including NTSC, PAL, and SECAM.*
- *A high brightness rating allows for presentations in daylight or in lit rooms.*
- *Supports resolutions up to UXGA at 16.7 million colors to deliver crisp, clear images.*
- *Flexible setup allows for front, rear projections.*
- *Line-of-vision projections remain square, with advanced keystone correction for angled projections.*
- *Input source automatically detected.*

About this Manual

This manual is intended for end users and describes how to install and operate the DLP projector. Wherever possible, relevant information—such as an illustration and its description—has been kept on one page. This printer-friendly format is both for your convenience and to help save paper, thereby protecting the environment. It is suggested that you only print sections that are relevant to your needs.

Table of Contents

GETTING STARTED 1

- **PACKING CHECKLIST** 1
- **VIEWS OF PROJECTOR PARTS** 2
  - *Front-right View* 2
  - *Top view—On-screen Display (OSD) buttons and LEDs* 3
  - *Rear view* 4
  - *Bottom view* 6
- **REMOTE CONTROL PARTS** 7
- **REMOTE CONTROL OPERATING RANGE** 9
- **PROJECTOR AND REMOTE CONTROL BUTTONS** 9

SETUP AND OPERATION 10

- **INSERTING THE REMOTE CONTROL BATTERIES** 10
- **STARTING AND SHUTTING DOWN THE PROJECTOR** 11
- **SETTING AN ACCESS PASSWORD (SECURITY LOCK)** 13
- **ADJUSTING THE PROJECTOR LEVEL** 15
- **ADJUSTING THE FOCUS AND KEYSTONE** 16
- **ADJUSTING THE VOLUME** 16

ON-SCREEN DISPLAY (OSD) MENU SETTINGS 17

- **OSD MENU CONTROLS** 17
  - *Navigating the OSD* 17
- **SETTING THE OSD LANGUAGE** 18
- **OSD MENU OVERVIEW** 19
- **IMAGE MENU** 22
  - *Computer Menu* 23
  - *Advanced Feature* 24
  - *White Balance* 25
  - *Color Manager* 26
- **SETTINGS 1 MENU** 27
  - *Audio* 28
  - *Advanced 1 Feature* 29
  - *Advanced 2 Feature* 31
- **SETTINGS 2 MENU** 32
  - *Status* 33
  - *Advanced 1 Feature* 34
  - *Advanced 2 Feature* 46

MAINTENANCE AND SECURITY 48

- **REPLACING THE PROJECTION LAMP** 48
  - *Resetting the Lamp* 51
- **CLEANING THE PROJECTOR** 52
  - *Cleaning the Lens* 52
  - *Cleaning the Case* 52
- **USING THE KENSINGTON LOCK** 53
  - *Using the Kensington Lock* 53
  - *Using the Security Bar* 53

TROUBLESHOOTING 54

- **COMMON PROBLEMS AND SOLUTIONS** 54
- **TIPS FOR TROUBLESHOOTING** 54
- **LED ERROR MESSAGES** 55
- **IMAGE PROBLEMS** 55
- **LAMP PROBLEMS** 56
- **REMOTE CONTROL PROBLEMS** 56
- **AUDIO PROBLEMS** 57
- **HAVING THE PROJECTOR SERVICED** 57
- **HDMI Q & A** 58

SPECIFICATIONS **59**

SPECIFICATIONS **59**
PROJECTION DISTANCE VS. PROJECTION SIZE **60**
Projection Distance and Size Table *60*
TIMING MODE TABLE **61**
PROJECTOR DIMENSIONS **63**

REGULATORY COMPLIANCE **64**

FCC WARNING **64**
CANADA **64**
SAFETY CERTIFICATIONS **64**

APPENDIX I **65**

RS-232C PROTOCOL **65**

GETTING STARTED

Packing Checklist

Carefully unpack the projector and check that the following items are included:

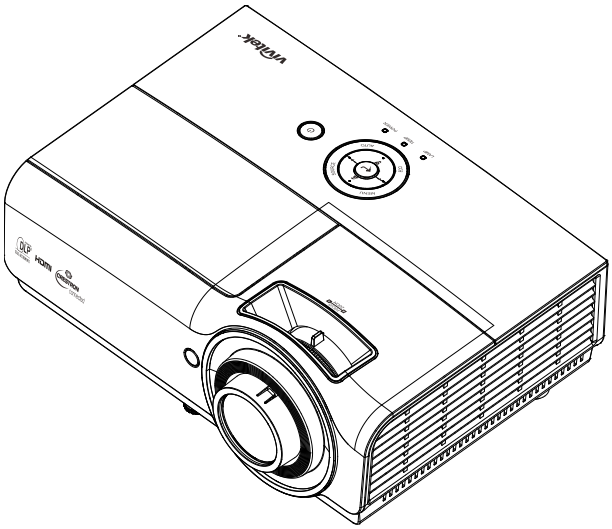

DLP PROJECTOR

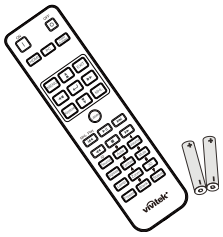

REMOTE CONTROL
(WITH TWO AAA BATTERIES)

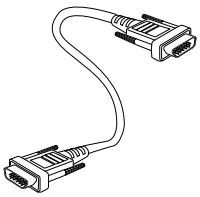

RGB CABLE

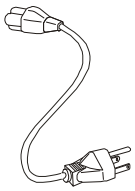

POWER CORD

CD-ROM
(THIS USER'S MANUAL)

QUICK START GUIDE

WARRANTY CARD

Contact your dealer immediately if any items are missing, appear damaged, or if the unit does not work. It is recommend that you keep the original packing material should you ever need to return the equipment for warranty service.

> ⚠ ***Caution:***
> *Avoid using the projector in dusty environments.*

Views of Projector Parts

Front-right View

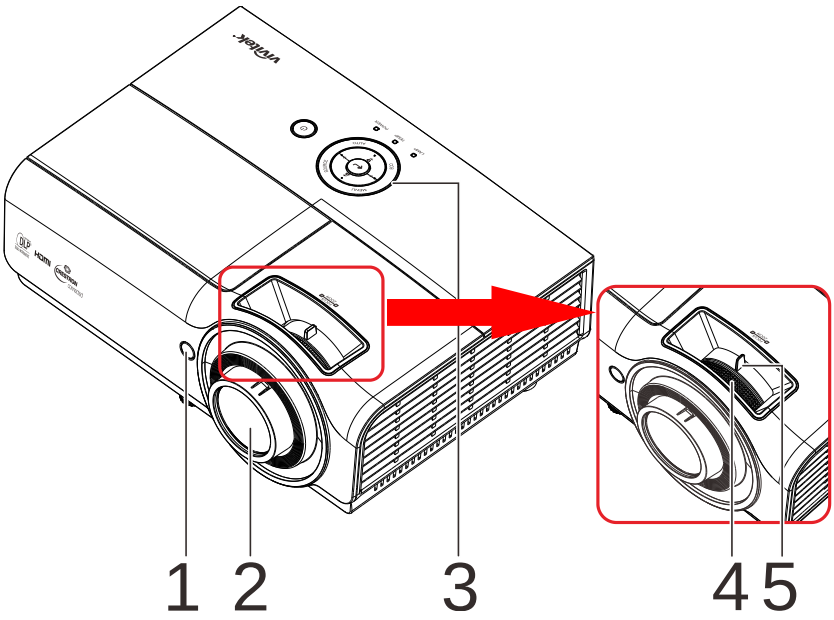

ITEM	LABEL	DESCRIPTION	SEE PAGE
1.	IR receiver	Receive IR signal from remote control.	
2.	Lens	Projection Lens.	
3.	Function keys	See Top view—On-screen Display (OSD) buttons and LEDs.	***3***
4.	Focus ring	Focuses the projected image.	***16***
5.	Zoom ring	Enlarges the projected image.	

Important:
Ventilation openings on the projector allow for good air circulation, which keeps the projector lamp cool. Do not obstruct any of the ventilation openings.

Top view—On-screen Display (OSD) buttons and LEDs

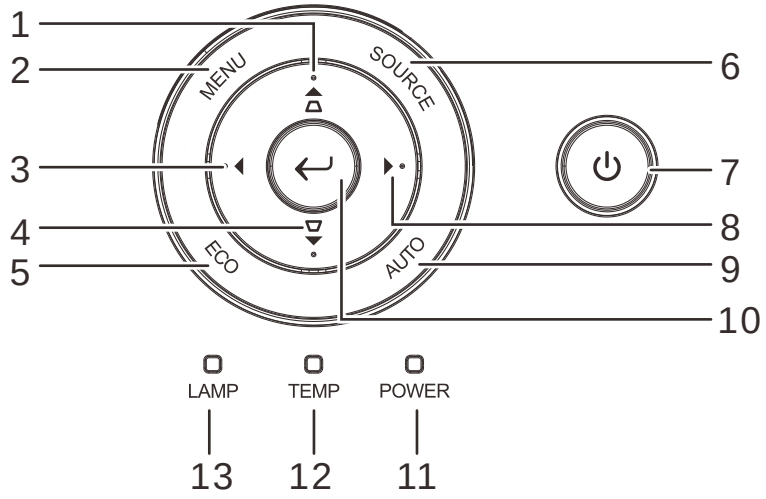

ITEM	LABEL	DESCRIPTION		SEE PAGE
1.	▲ (Up cursor) / Keystone ⏢	Navigates and changes settings in the OSD Quick Menu – For Keystone		***17***
2.	MENU	Opens and exits OSD menus		
3.	◄ (Left cursor)	Navigates and changes settings in the OSD		
4.	▼ (Down cursor) / Keystone ⏢	Navigates and changes settings in the OSD Quick Menu – For Keystone		
5.	ECO	Enter the lamp mode menu		
6.	SOURCE	Navigates and changes settings in the OSD Enter the Source menu		***17***
7.	⏻ (Power button)	Turns the projector On or Off.		
8.	► (Right cursor)	Navigates and changes settings in the OSD		
9.	AUTO	Navigates and changes settings in the OSD Optimizes image size, position, and resolution		
10.	Enter	Enter or confirm highlighted OSD menu item		
11.	POWER LED	Solid Green	Standby, Lamp Lit, over temperature	***55***
		Flashing Green	System Initialized, System Power On , Cooling , Error code	
12.	TEMP LED	Solid Red	Over temperature	
13.	LAMP LED	Solid Red	Lamp Fail.	
		Flashing Red	Error code	

Rear view

Warning:
As a safety precaution, disconnect all power to the projector and connecting devices before making connections.

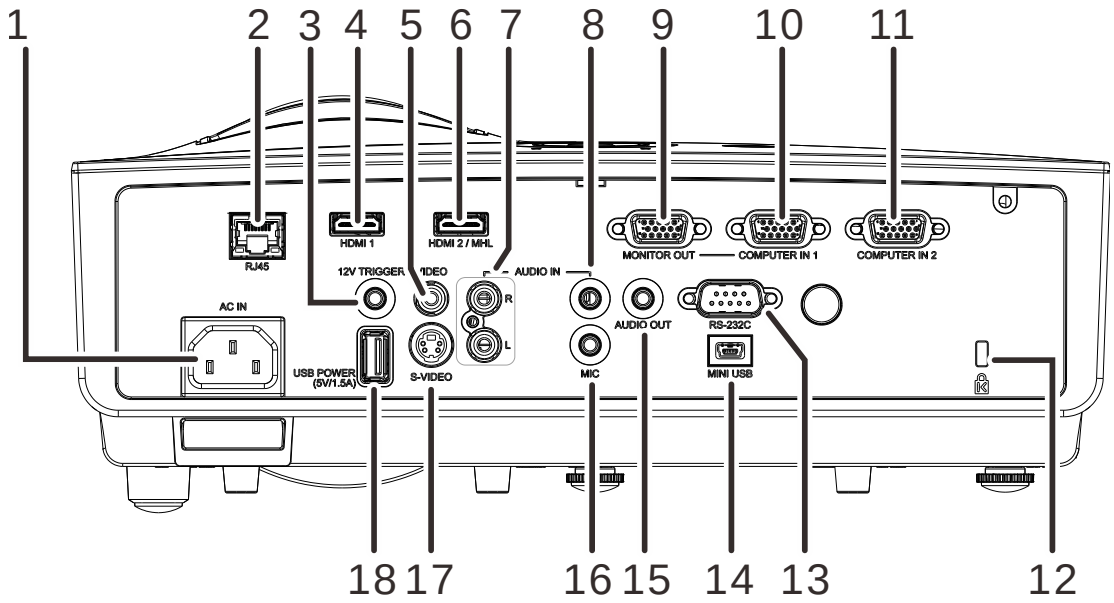

ITEM	LABEL	DESCRIPTION	SEE PAGE
1.	AC IN	Connect the POWER cable	***11***
2.	RJ45	Connect a LAN cable from Ethernet	
3.	12V TRIGGER	Connect the 12V OUT (Screen Trigger-- For screen controllers used)	
4.	HDMI 1	Connect the HDMI cable from a HDMI device	
5.	VIDEO	Connect the COMPOSITE cable from a video device	
6.	HDMI 2 / MHL	Connect the HDMI cable from a HDMI device. Connect the MHL cable from a MHL-compatible device. Note: For some MHL compatible devices, whose output is not thru micro-USB, an extra cable adaptor may be required.	
7.	AUDIO IN (R / L)	Connect an AUDIO cable from the audio device	
8.	AUDIO IN	Connect an AUDIO cable from the audio device	
9.	MONITOR OUT (COMPUTER IN 1)	Connect the RGB cable from a computer	
10.	COMPUTER IN 1	Connect the RGB cable from a computer or components device	
11.	COMPUTER IN 2	Connect the RGB cable from a computer or components device	
12.	Kensington Lock	Secure to permanent object with a Kensington Lock system	***53***

13.	RS-232C	Connect RS-232 serial port cable for remote control
14.	MINI USB	Connect the USB cable from a computer (For service only)
15.	AUDIO OUT	Connect an AUDIO cable to audio amplifier
16.	MIC	Connect the Microphone for use
17.	S-VIDEO	Connect the S-VIDEO cable from a video device
18.	USB POWER (5V/1.5A)	Connect the USB cable for power supply.

Bottom view

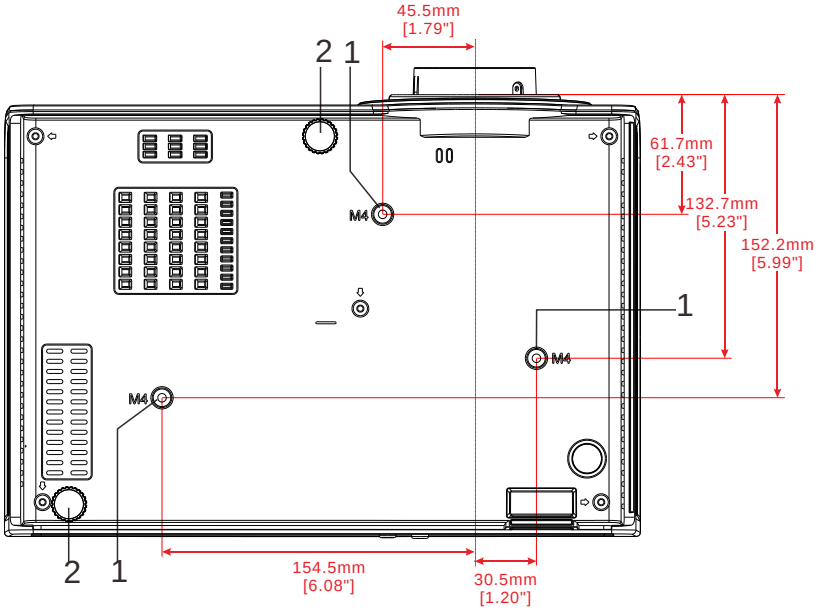

ITEM	LABEL	DESCRIPTION	SEE PAGE
1.	Ceiling support holes	Contact your dealer for information on mounting the projector on a ceiling	
2.	Tilt adjustor	Rotate adjuster lever to adjust angle position.	***15***

Note:
When installing, ensure that you use only UL Listed ceiling mounts.
For ceiling installations, use approved mounting hardware and M4 screws with a maximum screw depth of 6 mm (0.24 inch).
The construction of the ceiling mount must be of a suitable shape and strength. The ceiling mount load capacity must exceed the weight of the installed equipment, and as an additional precaution be capable of withstanding three times the weight of the equipment (not less than 5.15 kg) over a period of 60 seconds.

Remote Control Parts

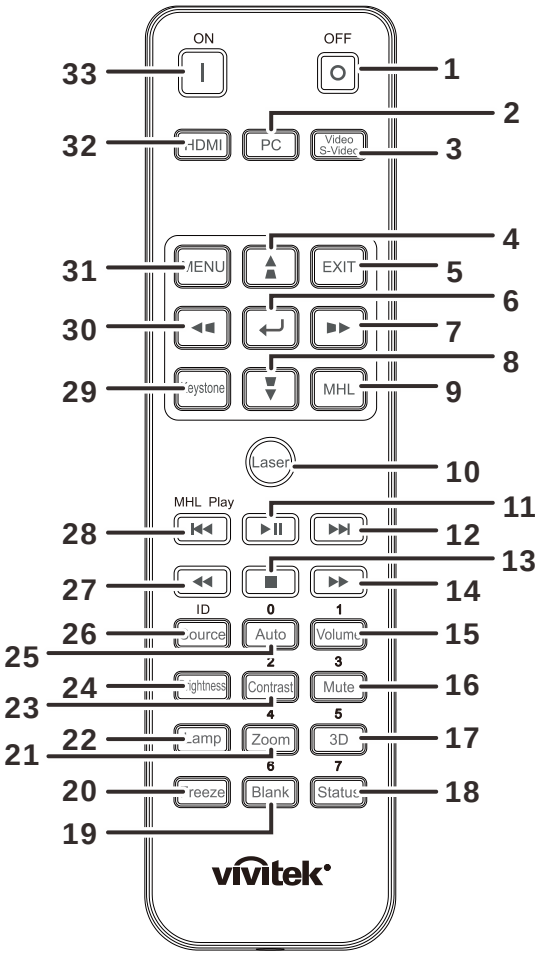

Important:

1. *Avoid using the projector with bright fluorescent lighting turned on. Certain high-frequency fluorescent lights can disrupt remote control operation.*

2. *Be sure nothing obstructs the path between the remote control and the projector. If the path between the remote control and the projector is obstructed, you can bounce the signal off certain reflective surfaces such as projector screens.*

3. *The buttons and keys on the projector have the same functions as the corresponding buttons on the remote control. This user's manual describes the functions based on the remote control.*

Note:

Complies with FDA performance standards for laser products except for deviations pursuant to Laser Notice No. 50, dated June 24, 2007

ITEM	LABEL	DESCRIPTION	SEE PAGE
1.	OFF	Turns the projector off	
2.	PC	Toggles the input sources for display between PC sources	
3.	Video/S-Video	Toggles the input sources for display between Video and S-Video	
4.	▲	Navigates and changes settings in the OSD or MHL mode Keystone correction.	17
5.	EXIT	Goes back to previous OSD menu, exits and saves menu settings Goes back to previous page or exit programs in MHL mode	
6.	↵	Enters and confirms settings in the OSD and MHL mode	17
7.	▶	Navigates and changes settings in the OSD or MHL mode	
8.	▼	Navigates and changes settings in the OSD or MHL mode Keystone correction.	17
9.	MHL	Starts for selection in MHL mode	
10.	Laser	Presses to emit the on-screen pointer. **DO NOT POINT IN EYES**.	
11.	▶II	Starts / pauses the file in MHL mode	
12.	▶▶I	Goes to the next file in MHL mode	
13.	■	Stops the file in MHL mode	
14.	▶▶	Fast forwards the file in MHL mode	
15.	Volume	Displays the volume setting bar	16
16.	Mute	Toggles the built-in speaker between on and off	
17.	3D	Opens the 3D function OSD	
18.	Status	Opens the OSD Status menu (the menu only opens when an input device is detected)	33
19.	Blank	Toggles the screen between blank and normal	
20.	Freeze	Freeze/unfreezes the on-screen picture	
21.	Zoom	Displays the zoom setting bar	
22.	Lamp	Displays the lamp mode selection	
23.	Contrast	Displays the contrast setting bar	
24.	Brightness	Displays the brightness setting bar	
25.	Auto	Auto adjustment for frequency, phase, and position	17
26.	Source	Displays the source selection bar	
27.	◀◀	Fast reverses the file in MHL mode	
28.	I◀◀	Goes to the previous file in MHL mode	
29.	Keystone	Displays the keystone setting bar	16
30.	◀	Navigates and changes settings in the OSD or MHL mode	
31.	Menu	Opens the OSD	17

ITEM	LABEL	DESCRIPTION	SEE PAGE
32.	HDMI	Toggles the input sources for display between HDMI sources	
33.	ON	Turns the projector on	

⚠ ***Caution:***
Use of controls, adjustments or performance of procedures other than those specified herein may result in hazardous laser light exposure.

Note:

Controlling your smart device with the remote control
When the projector projects the contents from your MHL compatible smart device, you can use the remote control to control your smart device.

To enter the MHL mode, the following buttons are available for controlling your smart device, Arrow keys ***(▲Up, ▼Down, ◄ Left, ► Right), MENU/EXIT, MHL*** *control buttons.*

When the projector is under ***MHL*** *mode, The keypad on projector should be with the same definition of the key on remote control.*

Remote Control Operating Range

The remote control uses infrared transmission to control the projector. It is not necessary to point the remote directly at the projector. Provided you are not holding the remote perpendicular to the sides or the rear of the projector, the remote will function well within a radius of about 7 meters (23 feet) and 15 degrees above or below the projector level. If the projector does not respond to the remote control, move a little closer.

Projector and Remote Control Buttons

The projector can be operated using the remote control or the buttons on the top of the projector. All operations can be carried out with the remote control; however, the buttons on the projector are limited in use.

Inserting the Remote Control Batteries

1. Remove the battery compartment cover by sliding the cover in the direction of the arrow.

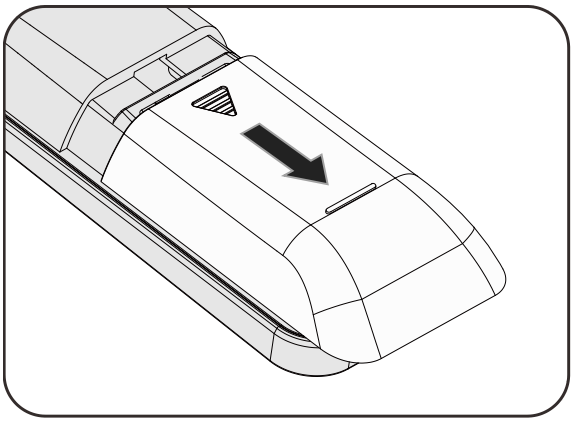

2. Insert the battery with the positive side facing up.

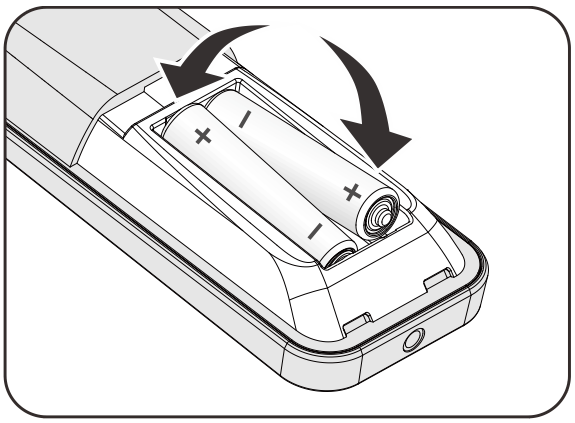

3. Replace the cover.

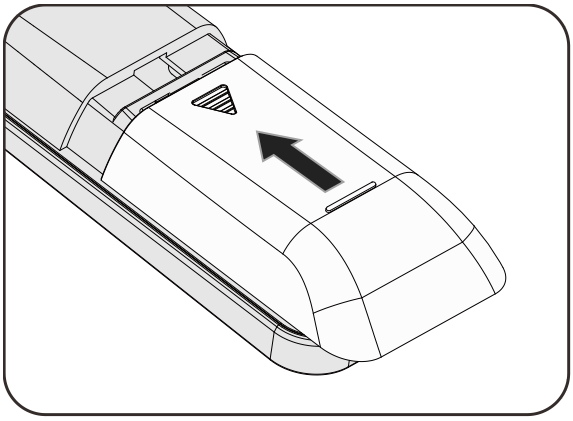

⚠ ***Caution:***

1. *Only use AAA batteries (Alkaline batteries are recommended).*

2. *Dispose of used batteries according to local ordinance regulations.*

3. *Remove the batteries when not using the projector for prolonged periods.*

Starting and Shutting down the Projector

1. Connect the power cord to the projector. Connect the other end to a wall outlet.
The ⏻ **POWER** LED on the projector light.

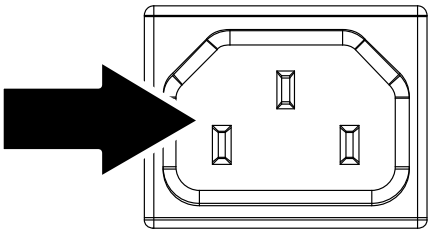

2. Turn on the connected devices.

3. Ensure the POWER LED not a flashing. Then press the ⏻ **POWER** button to turn on the projector.

The projector splash screen displays and connected devices are detected.

See *Setting an Access Password (Security Lock)* on page 13 if security lock is enabled.

4. If more than one input device is connected, press the **SOURCE** button and use ▲▼ to scroll among devices.
(Component is supported through the RGB to COMPONENT ADAPTER.)

Note:
After powered on for 3 minutes, the projector goes into the ED (Extreme Dimming) mode if the source cannot be detected within 30 seconds.

- VGA1 / VGA2: Analog RGB
- Composite Video: Traditional composite video
- S-Video: Super video (Y/C separated)
- HDMI 1: High-Definition Multimedia Interface 1
- HDMI 2/MHL: High-Definition Multimedia Interface 2 /MHL

5. When the "Power Off? /Press **Power** again" message appears, press the **POWER** button. The projector turns off.

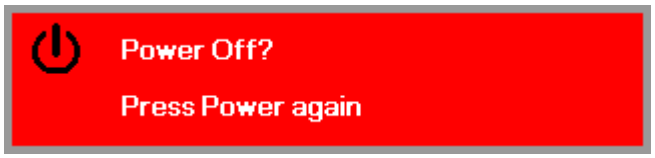

Caution:
Do not unplug the power cord until the POWER LED stops flashing–indicating the projector has cooled down.

Setting an Access Password (Security Lock)

You can use the four (arrow) buttons to set a password and prevent unauthorized use of the projector. When enabled, the password must be entered after you power on the projector. (See *Navigating the OSD* on page 17 and *Setting the OSD Language* on page 18 for help on using OSD menus.)

> ⚠ ***Important:***
> *Keep the password in a safe place. Without the password, you will not be able to use the projector. If you lose the password, contact your reseller for information on clearing the password.*

1. Press the **MENU** button to open the OSD menu.

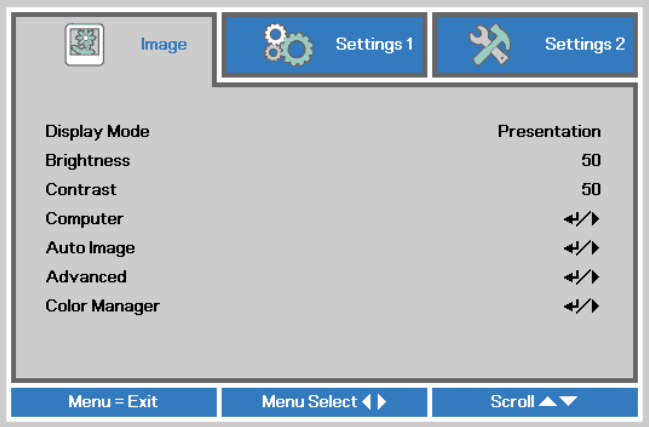

2. Press the cursor ◄► button to move to the **Settings 1** menu, press the cursor ▲▼ button to select **Advanced 1**.

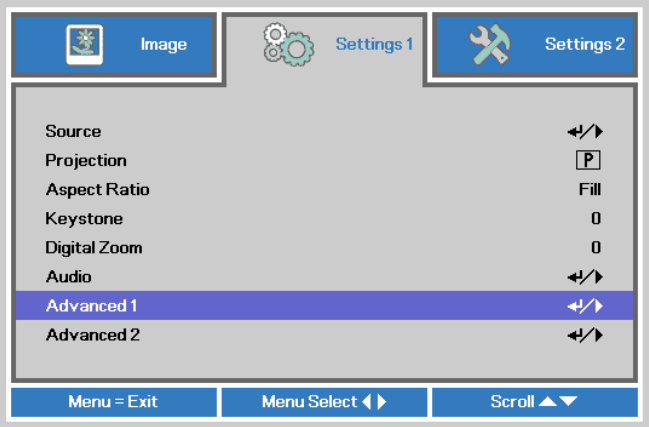

3. Press ↵ (Enter) / ► to enter the **Advanced 1** sub menu. Press the cursor ▲▼ button to select **Security Lock**.

4. Press the cursor ◄► button to enter and enable or disable security lock function.

A password dialog box automatically appears.

5. You can use the cursor buttons ▲▼◀▶ either on keypad or IR remote control for password entry. You can use any combination including the same arrow five times, but not less than five.

Press the cursor buttons in any order to set the password. Push the **MENU** button to exit the dialog box.

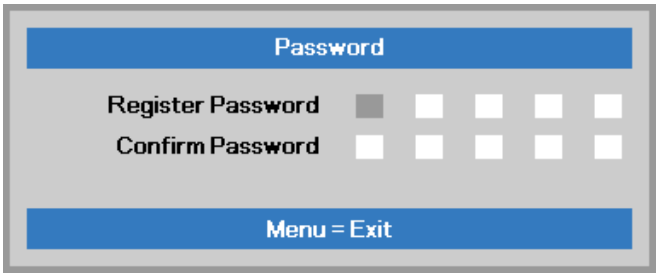

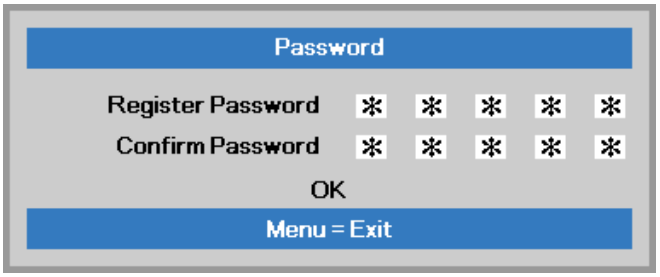

6. The password confirm menu appears when user presses the power-on key in case the **Security Lock** is enabled. Enter the password in the order you set it at step 5. In case you forget the password, please contact the service center.
The service center will validate the owner and help reset the password.

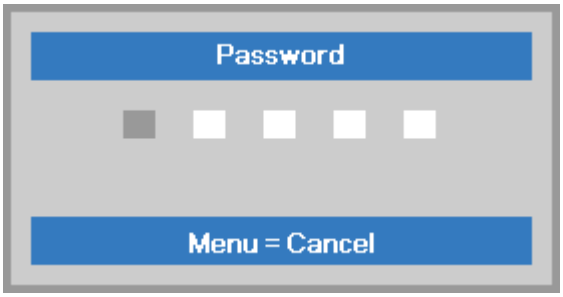

Adjusting the Projector Level

Take note of the following when setting up the projector:

- *The projector table or stand should be level and sturdy.*
- *Position the projector so that it is perpendicular to the screen.*
- *Ensure the cables are in a safe location. You could trip over them.*

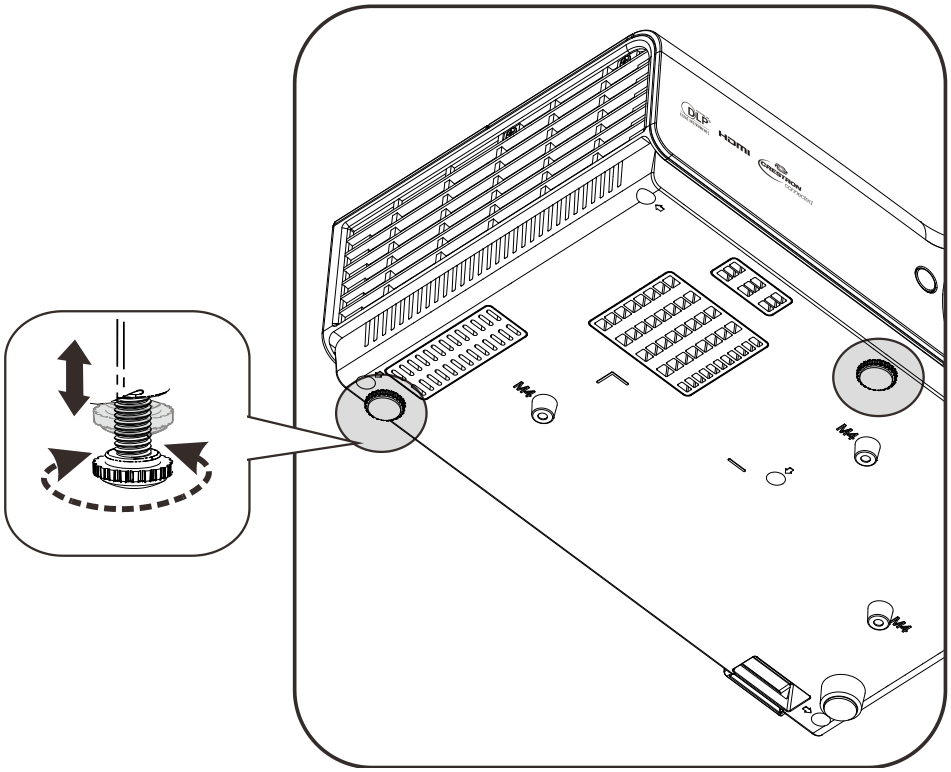

To adjust the angle of the picture, turn the tilt-adjuster right or left until the desired angle has been achieved.

Adjusting the Focus and Keystone

1. Use the **Image-zoom** control (on the projector only) to resize the projected image and screen size Ⓑ.

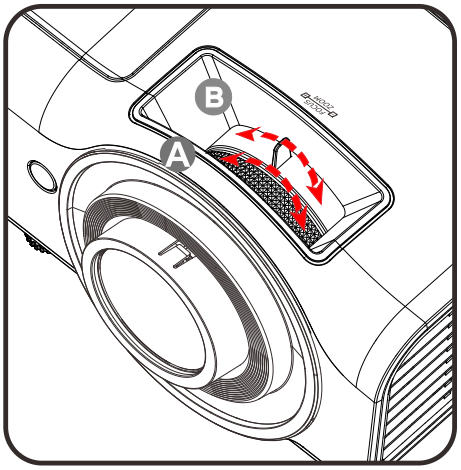

2. Use the **Image-focus** control (on the projector only) to sharpen the projected image Ⓐ.

3. Use the **KEYSTONE** buttons (on the projector or the remote control) to correct image-trapezoid (wider top or bottom) effect.

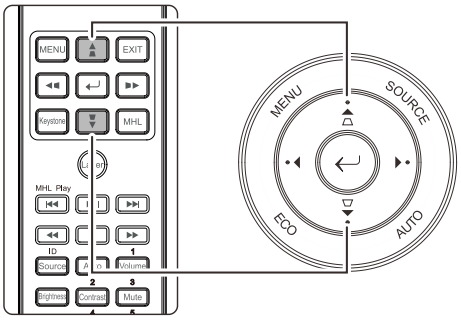

4. The keystone control appears on the display.

Adjusting the Volume

1. Press the **Volume** buttons on the remote control.
The volume control appears on the display.

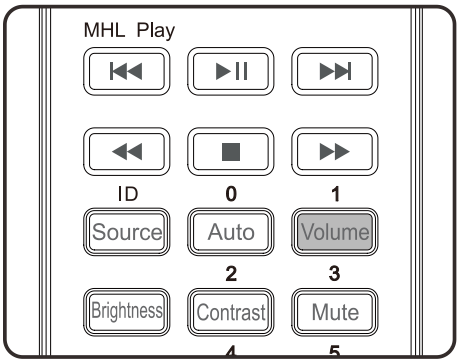

2. Press the **MUTE** button to turn off the volume. (This feature is available only on the remote).

ON-SCREEN DISPLAY (OSD) MENU SETTINGS

OSD Menu Controls

The projector has an OSD that lets you make image adjustments and change various settings.

Navigating the OSD

You can use the remote control cursor buttons or the projector keypad to navigate and make changes to the OSD.

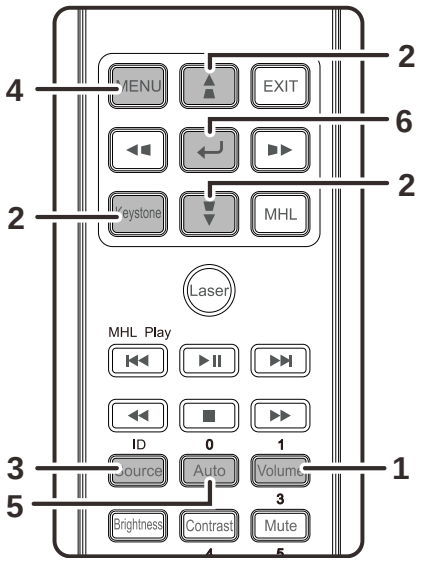

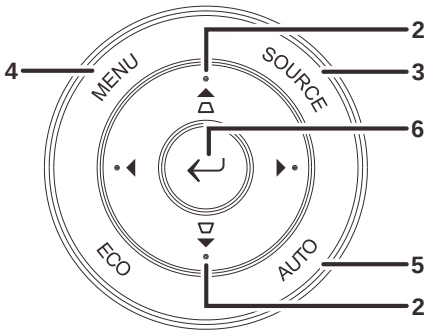

1. To enter the OSD, press the **MENU** button.
2. There are three menus. Press the cursor ◄► button to move through the menus.
3. Press the cursor ▲▼ button to move up and down in a menu.
4. Press ◄► to change values for settings.
5. Press **MENU** to close the OSD or leave a submenu.

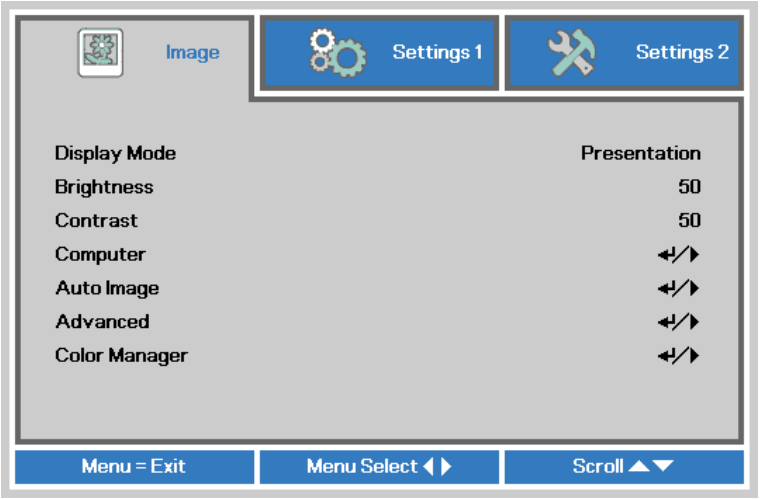

> ***Note:***
> *Depending on the video source, not all items in the OSD are available. For example, the* ***Horizontal/Vertical Position*** *items in the* ***Computer*** *menu can only be modified when connected to a PC. Items that are not available cannot be accessed and are grayed out.*

Setting the OSD Language

Set the OSD language to your preference before continuing.

1. Press the **MENU** button. Press the cursor ◄► button to navigate to **Settings 1**. Press the cursor ▲▼ button to move to the **Advanced 1** menu.

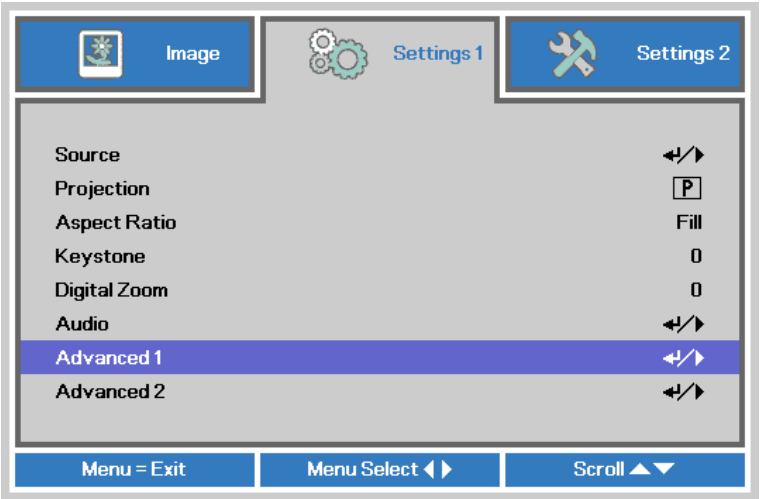

2. Press ↵ (Enter) / ► to enter the **Advanced 1** sub menu. Press the cursor ▲▼ button until **Language** is highlighted.

3. Press the cursor button until the language you want is highlighted.
4. Press the **MENU** button four times to close the OSD.

OSD Menu Overview

Use the following illustration to quickly find a setting or determine the range for a setting.

Main Menu	Sub Menu			Settings
Image	Display Mode			Presentation, Bright, Game, Movie, TV, sRGB, Blackboard, User
	Brightness			0~100
	Contrast			0~100
	Computer	Horizontal Position		-5~5 (depend on Autolock)
		Vertical Position		-5~5 (depend on Autolock)
		Frequency		0~31
		Tracking		-5~5
	Auto Image			
	Advanced	Brilliant Color		0~10
		Sharpness		0~31
		Gamma		1.8, 2.0, 2.2, 2.4, B&W, Linear
		Color Temperature		Warm, Normal, Cold
		Video AGC		Off, On
		Video Saturation		0~100
		Video Tint		0~100
		White Balance	RGain	0~200
			GGain	0~200
			BGain	0~200
			ROffset	-256~255
			GOffset	-256~255
			BOffset	-256~255
	Color Manager	Red	Hue, Saturation, Gain	0~100
		Green	Hue, Saturation, Gain	0~100
		Blue	Hue, Saturation, Gain	0~100
		Cyan	Hue, Saturation, Gain	0~100
		Magenta	Hue, Saturation, Gain	0~100
		Yellow	Hue, Saturation, Gain	0~100
		White	Red, Green, Blue	0~100

Main Menu	Sub Menu			Settings
Settings 1	Source	Source		reference Input Source Select (IR/Keypad)
	Projection			Normal, Real, Ceiling, Real+Ceiling
	Aspect Ratio			Fill, 4:3, 16:9, Letter Box, Native, 2.35:1
	Keystone			-40~40
	Digital Zoom			-10~10
	Audio	Volume		0~10
		Mute		Off, On
		MIC		Off, On
	Advanced 1	Language		English, Français, Deutsch, Español, 簡体中文, 繁體中文, Italiano, Svenska, Nederlands, Русский, Polski, 한국어, Čeština, Türkçe, Việt, 日本語, ไทย
		Security Lock		Off, On
		Blank Screen		Blank, Red, Green, Blue, White
		Splash Logo		Off, On
		Closed Captioning		Off, On
		KeypadLock		Off, On
		3D Setting	3D	Off, DLP-Link, IR
			3D Sync Invert	Off, On
			3D Format	Frame Sequential, Top/Bottom, Side-By-Side, Frame Packing (3D Frame Packing HDMI source only)
	Advanced 2	Test Pattern		None, Grid, White, Red, Green, Blue, Black
		H Image Shift		-50~50
		V Image Shift		-50~50

Main Menu	Sub Menu			Settings
Settings 2	Auto Source			Off, On
	No Signal Power Off			0~180
	Auto Power On			Off, On
	Lamp Mode			ECO , Normal, Dynamic ECO, Dynamic Eco Plus
	Reset All			
	Status	Active Source		
		Video Information		
		Lamp Hours(ECO, Normal)		
		Software Version		
	Advanced 1	Menu Position		Center, Down, Up, Left, Right
		Translucent Menu		0%, 25%, 50%, 75%, 100%
		Low Power Mode		Off, Low Power, On By Lan
		Fan Speed		Normal, High
		Lamp Hour Reset		
		Projector ID		0-98
		Network	Network State	Connect, Disconnect
			DHCP	Off, On
			IP Address	0~255, 0~255, 0~255. 0~255
			Subnet Mask	0~255, 0~255, 0~255. 0~255
			Gateway	0~255, 0~255, 0~255. 0~255
			DNS	0~255, 0~255, 0~255. 0~255
			Apply	Ok / Cancel
	Advanced 2	Sleep Timer		0~600
		Source Filter	VGA1	Disable, Enable
			VGA2	Disable, Enable
			Composite Video	Disable, Enable
			S-Video	Disable, Enable
			HDMI 1	Disable, Enable
			HDMI 2/MHL	Disable, Enable
		Wall Color		Off, Light Yellow, Pink, Light Green, Blue, Blackboard
		Color Space		Auto, RGB, YUV
		Quantization Range		Auto, Full, Limit

Image Menu

> ⚠ ***Attention !***
> *All of display mode parameters when changed will be saved to user mode.*

Press the **MENU** button to open the **OSD** menu. Press the cursor ◄► button to move to the **Image Menu**. Press the cursor ▲▼ button to move up and down in the **Image** menu. Press ◄► to enter and change values for settings.

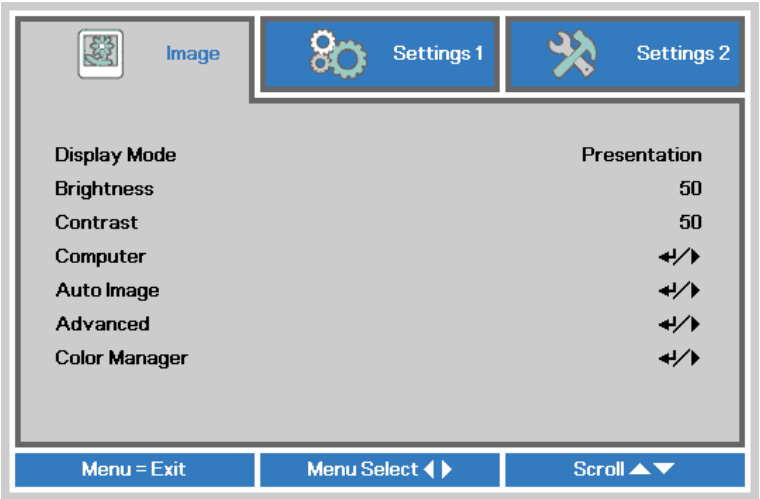

ITEM	DESCRIPTION
Display Mode	Press the cursor ◄► button to enter and set the Display Mode.
Brightness	Press the cursor ◄► button to enter and adjust the display brightness.
Contrast	Press the cursor ◄► button to enter and adjust the display contrast.
Computer	Press (Enter) / ► to enter the Computer menu. See *Computer Menu* on page 23.
Auto Image	Press (Enter) / ► to automatically adjustment for phase, tracking, size and position.
Advanced	Press ↵ (Enter) / ► to enter the Advanced menu. See *Advanced Feature* on page 24.
Color Manager	Press (Enter) / ► to enter the color manager menu. See page 26 for more information on *Color Manager*.

Computer Menu

Press the **MENU** button to open the **OSD** menu. Press ◄► to move to the **Image** menu. Press ▲▼ to move to the **Computer** menu and then press **Enter** or ►. Press ▲▼ to move up and down in the **Computer** menu.

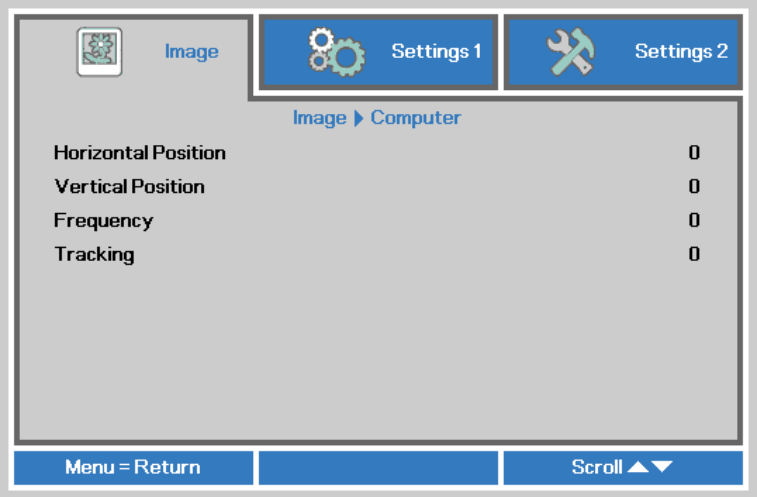

ITEM	DESCRIPTION
Horizontal Position	Press the cursor ◄► button to enter and adjust the display position to left or right.
Vertical Position	Press the cursor ◄► button to enter and adjust the display position to up or down.
Frequency	Press the cursor ◄► button to enter and adjust the A/D sampling clock.
Tracking	Press the cursor ◄► button to enter and adjust the A/D sampling dot.

Advanced Feature

Press the **Menu** button to open the **OSD** menu. Press ◄► to move to the **Image** menu. Press ▼▲ to move to the **Advanced** menu and then press **Enter** or ►. Press ▼▲ to move up and down in the **Advanced** menu.

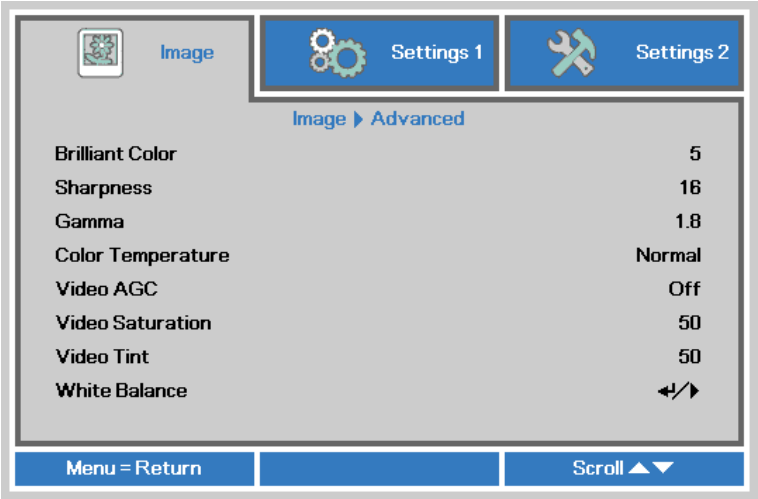

ITEM	DESCRIPTION
Brilliant Color	Press the cursor ◄► button to enter and adjust the Brilliant Color value.
Sharpness	Press the cursor ◄► button to enter and adjust the display Sharpness.
Gamma	Press the cursor ◄► button to enter and adjust the gamma correction of the display.
Color Temperature	Press the cursor ◄► button to enter and adjust the color temperature.
Video AGC	Press the ◄► buttons to enter and enable or disable the Automatic Gain Control for video source.
Video Saturation	Press the ◄► buttons to enter and adjust the video saturation.
Video Tint	Press the ◄► buttons to enter and adjust the video tint/hue.
White Balance	Press the **ENTER/ ►** button to enter the **White Balance** sub menu. See *White Balance* on page 25

White Balance

Press the **ENTER** button to enter the **White Balance** sub menu.

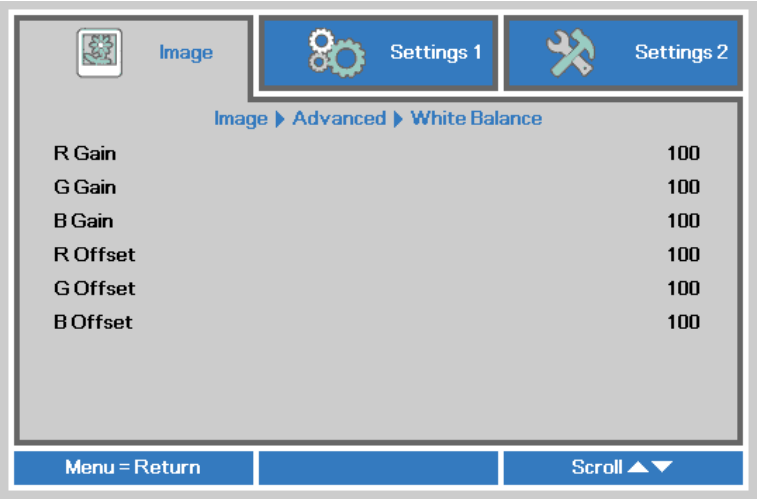

ITEM	DESCRIPTION
R Gain	Press the ◄► buttons to adjust the Red Gain.
G Gain	Press the ◄► buttons to adjust the Green Gain.
B Gain	Press the ◄► buttons to adjust the Blue Gain.
R Offset	Press the ◄► buttons to adjust the Red Offset.
G Offset	Press the ◄► buttons to adjust the Green Offset.
B Offset	Press the ◄► buttons to adjust the Blue Offset.

Color Manager

Press the **Menu** button to open the **OSD** menu. Press ◄► to move to the **Image** menu. Press ▼▲ to move to the **Color Manager** menu and then press **Enter** or ►. Press ▼▲ to move up and down in the **Color Manager** menu.

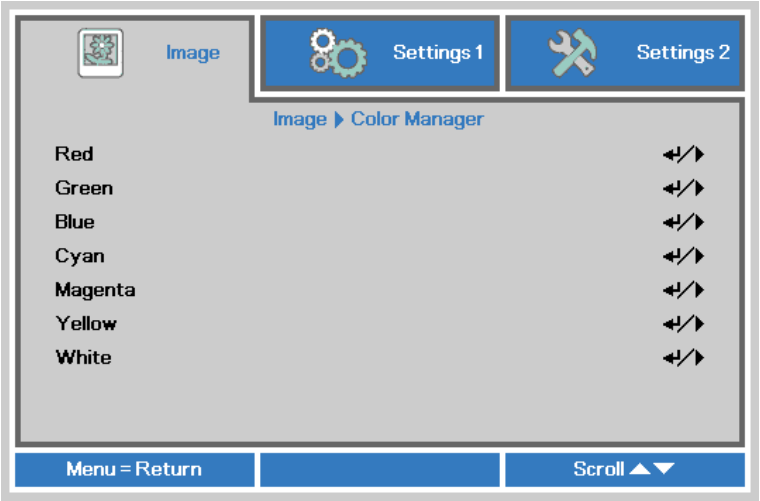

ITEM	DESCRIPTION
Red	Select to enter the Red Color Manager. Press the ◄► buttons to adjust the Hue, Saturation, and Gain.
Green	Select to enter the Green Color Manager. Press the ◄► buttons to adjust the Hue, Saturation, and Gain.
Blue	Select to enter the Blue Color Manager. Press the ◄► buttons to adjust the Hue, Saturation, and Gain.
Cyan	Select to enter the Cyan Color Manager. Press the ◄► buttons to adjust the Hue, Saturation, and Gain.
Magenta	Select to enter the Magenta Color Manager. Press the ◄► buttons to adjust the Hue, Saturation, and Gain.
Yellow	Select to enter the Yellow Color Manager. Press the◄► buttons to adjust the Hue, Saturation, and Gain.
White	Select to enter the White Color Manager. Press the ◄► buttons to adjust the Red, Green, and Blue.

Settings 1 Menu

Press the **MENU** button to open the **OSD** menu. Press the cursor ◄► button to move to the **Settings 1** menu. Press the cursor ▲▼ button to move up and down in the **Settings 1** menu. Press ◄► to enter and change values for settings.

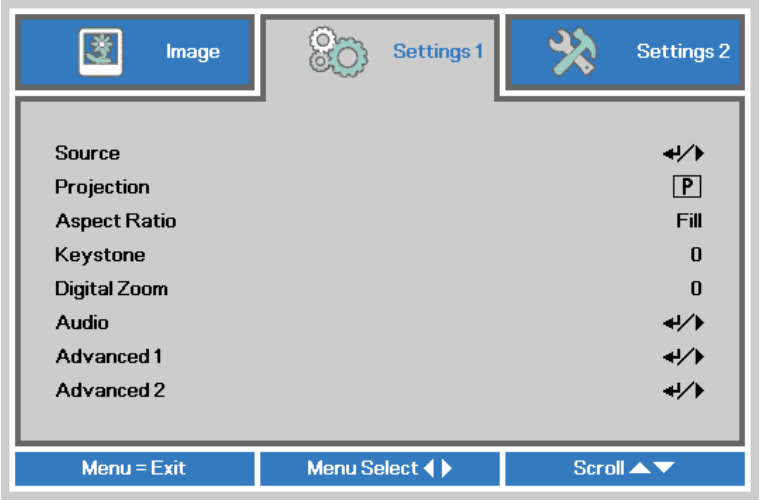

ITEM	DESCRIPTION
Source	Press the cursor ◄► button to enter the Source menu. Reference input Source select (IR / Keypad).
Projection	Press the cursor ◄► button to enter and choose from four projection methods:
Aspect Ratio	Press the cursor ◄► button to enter and adjust the video aspect ratio.
Keystone	Press the cursor ◄► button to enter and adjust the display keystone.
Digital Zoom	Press the cursor ◄► button to enter and adjust the Digital Zoom menu.
Audio	Press ↵ (Enter) / ► to enter the Audio menu. See *Audio* on page 28.
Advanced 1	Press ↵ (Enter) / ► to enter the Advanced 1 menu. See *Advanced 1 Feature* on page 29.
Advanced 2	Press ↵ (Enter) / ► to enter the Advanced 2 menu. See *Advanced 2 Feature* on page 31.

Audio

Press the **Menu** button to open the **OSD** menu. Press ◄► to move to the **Settings 1** menu. Press ▼▲ to move to the **Audio** menu and then press **Enter** or ►. Press ▼▲ to move up and down in the **Audio** menu.

ITEM	DESCRIPTION
Volume	Press the ◄► buttons to enter and adjust the audio volume.
Mute	Press the ◄► buttons to enter and turn on or off the speaker.
MIC	Press the ◄► buttons to enter and turn MIC Mode Off or On. Note: When MIC plug in, OSD MIC item can be turn on.

Advanced 1 Feature

Press the **Menu** button to open the **OSD** menu. Press ◄► to move to the **Settings 1** menu. Press ▲▼ to move to the **Advanced 1** menu and then press **Enter** or ►. Press ▲▼ to move up and down in the **Advanced 1** menu. Press ◄► to enter and change values for setting.

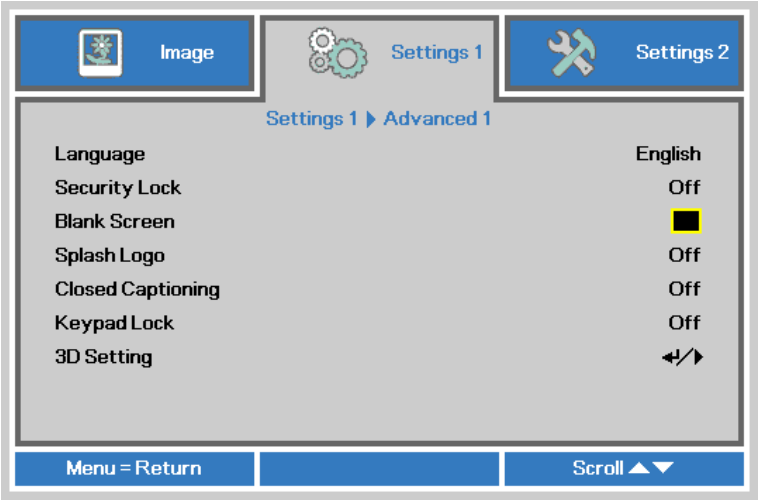

ITEM	DESCRIPTION
Language	Press the cursor ◄► button to enter and select a different localization Menu.
Security Lock	Press the cursor ◄► button to enter and enable or disable security lock function.
Blank Screen	Press the cursor ◄► button to enter and select different color to blank the screen.
Splash Logo	Press the cursor ◄► button to enter and select splash logo.
Closed Captioning	Press the ◄► buttons to enter and enable or disable Closed Captioning.
Keypad Lock	Press the cursor ◄► button to enter and enable or disable keys can be work on keypad.
3D Setting	Press ↵Enter/ ► to enter the 3D menu. See page 30 for more information on *3D Setting*.

Note:
To enjoy the 3D function, first enable the Play Movie in 3D setting found in your DVD device under the 3D Disc Menu.

3D Setting

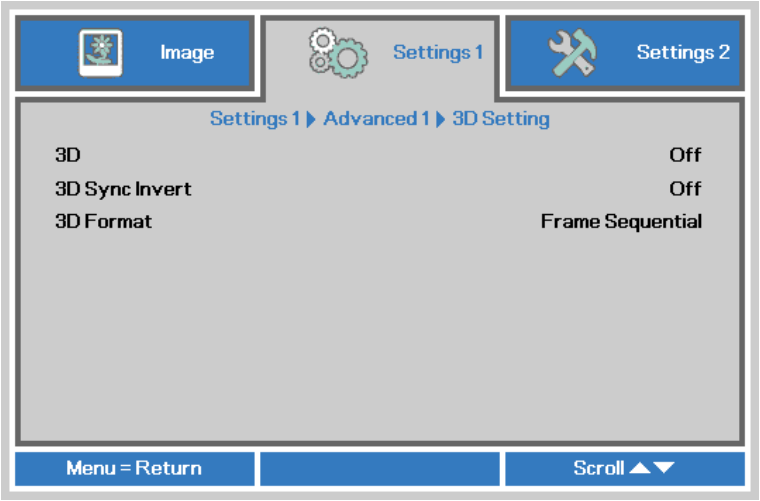

ITEM	DESCRIPTION
3D	Press the cursor ◀▶ button to enter and select different 3D mode.
3D Sync Invert	Press the cursor ◀▶ button to enter and enable or disable 3D Sync Invert.
3D Format	Press the cursor ◀▶ button to enter and enable or disable different 3D Format.

Note:

1. *The 3D OSD menu item is gray if there is no appropriate 3D source. This is the default setting.*
2. *When the projector is connected to an appropriate 3D source, the 3D OSD menu item is enabled for selection.*
3. *Use 3D glasses to view a 3D image.*
4. *You need 3D content from a 3D DVD or 3D media file.*
5. *You need to enable the 3D source (some 3D DVD content may have a 3D on-off selection feature).*
6. *You need DLP link 3D or IR 3D shutter glasses. With IR 3D shutter glasses, you need to install a driver on your PC and connect a USB emitter.*
7. *The 3D mode of the OSD needs to match the type of glasses (DLP link or IR 3D).*
8. *Power on the glasses. Glasses normally have a power on -off switch.*
   Each type of glasses has their own configuration instructions. Please follow the configuration instructions that come with your glasses to finish the setup process.

Note:
Since different types of glass (DLP link or IR shutter glass) have their own setting instructions, Please follow the guide to finish the setup process.

Advanced 2 Feature

Press the **Menu** button to open the **OSD** menu. Press ◄► to move to the **Settings 1** menu. Press ▲▼ to move to the **Advanced 2** menu and then press **Enter** or ►. Press ▲▼ to move up and down in the **Advanced 2** menu. Press ◄► to enter and change values for setting.

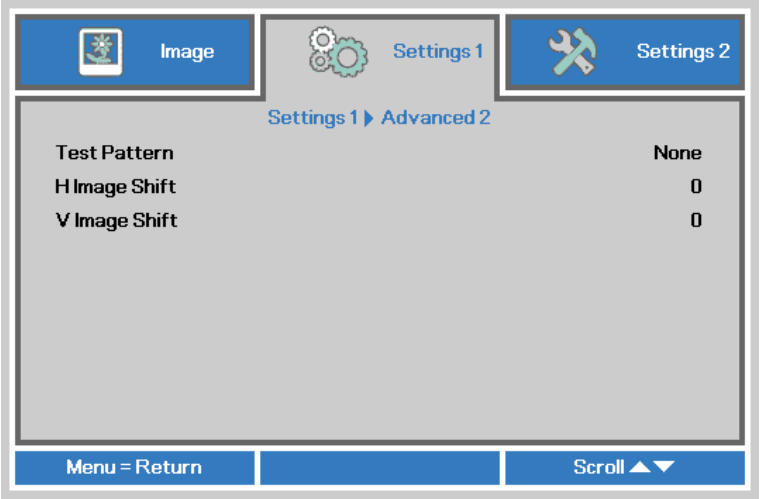

ITEM	DESCRIPTION
Test Pattern	Press the cursor ◄► button to enter and select internal test pattern.
H Image Shift	Press the cursor ◄► button to enter and select H Image Shift.
V Image Shift	Press the cursor ◄► button to enter and select V Image Shift.

Settings 2 Menu

Press the **MENU** button to open the **OSD** menu. Press the cursor ◄► button to move to the **Settings 2** menu. Press the cursor ▲▼ button to move up and down in the **Settings 2** menu.

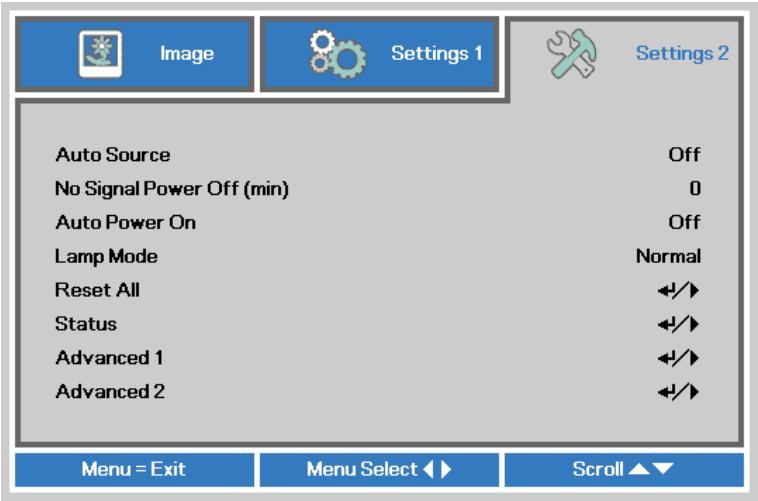

ITEM	DESCRIPTION
Auto Source	Press the cursor ◄► button to enter and enable or disable automatic source detection.
No Singal Power Off (min.)	Press the cursor ◄► button to enter and enable or disable automatic shutdown of lamp when no signal.
Auto Power On	Press the cursor ◄► button to enter and enable or disable automatic power On when AC power is supplied.
Lamp Mode	Press the cursor ◄► button to enter and select the lamp mode for higher brightness or lower brightness to save lamp life.
Reset All	Press ↵ (Enter) / ► to reset all settings to default values.
Status	Press ↵ (Enter) / ► to enter the Status menu. See page 33 for more information on *Status*.
Advanced 1	Press ↵ (Enter) / ► to enter the Advanced 1 menu. See *Advanced 1 Feature* on page 34.
Advanced 2	Press ↵ (Enter) / ► to enter the Advanced 2 menu. See *Advanced 2 Feature* on page 46.

Note :
"Dynamic ECO"*: Press* ***BLANK*** *button, or without any signal input in 30sec, Lamp will dim to 30% automatically.*

Status

Press the cursor ▲▼ button to move up and down in the **Settings 2** menu. Select the **Status** menu and press **Enter** or ► to enter.

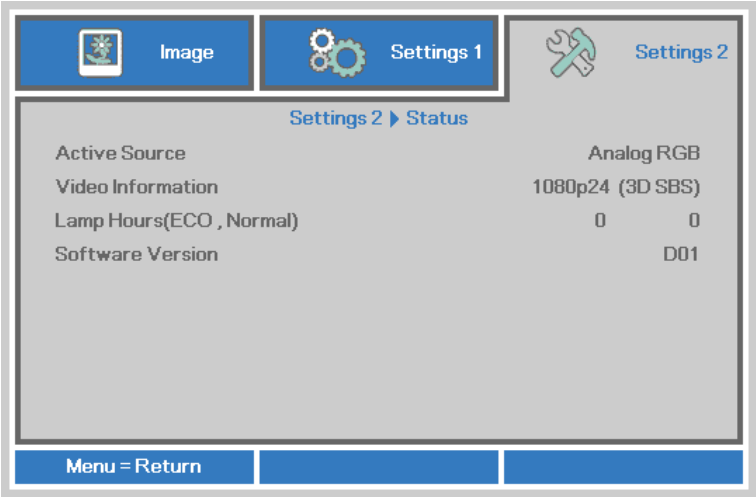

ITEM	DESCRIPTION
Active Source	Display the activated source.
Video Information	Displays resolution/video information for RGB source and color standard for Video source.
Lamp Hours (ECO, Normal)	Lamp hour used information is displayed. (ECO and Normal)
Software Version	Showing system software version.

Advanced 1 Feature

Press the **Menu** button to open the **OSD** menu. Press ◄► to move to the **Settings 2** menu. Press ▲▼ to move to the **Advanced 1** menu and then press **Enter** or ►. Press ▲▼ to move up and down in the **Advanced 1** menu. Press ◄► to enter and change values for setting.

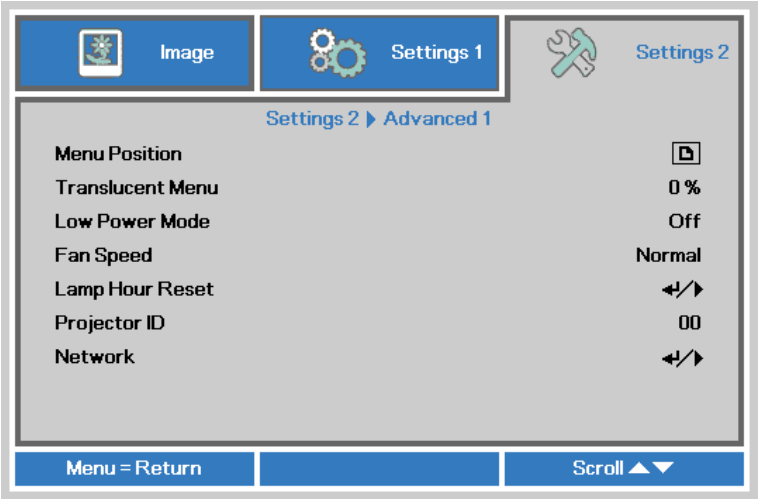

ITEM	DESCRIPTION
Menu Position	Press ◄► button to enter and select different OSD location.
Translucent Menu	Press ◄► button to enter and select OSD background translucent level.
Low Power Mode	Press ◄► to enter and turn Low Power Mode Off, Low Power or On By Lan.
Fan Speed	Press the cursor ◄► button to enter and toggle between Normal and High fan speeds. **Note**: We recommend selecting high speed in high temperatures, high humidity, or high altitude (higher than 1500m/4921ft) areas.
Lamp Hour Reset	After replacing the lamp, this item should be reset. See page 35 for more information on *Lamp Hour Reset*.
Projector ID	Press the cursor ◄► button to enter and adjust a two digit projector ID from 0 through 98.
Network	Press ↵ (Enter) / ► to enter the Network menu. See page 35 for more information on *Network*.

Note:
*About "**On By Lan**", RJ45 will support to be waked up in this mode(Under 6W) but scalar won't.*

Lamp Hour Reset

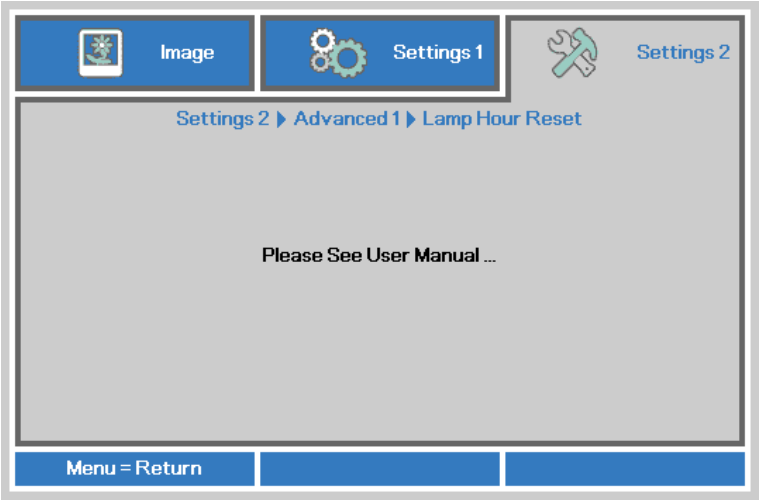

Please refer to *Resetting the Lamp* on page 51 to reset the lamp hour counter.

Network

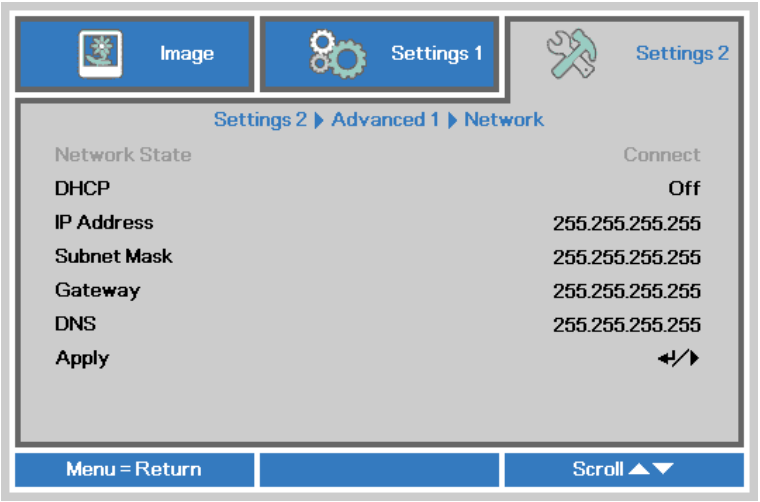

ITEM	DESCRIPTION
Network State	Displays the network connection status.
DHCP	Press the cursor ◄► button to turn DHCP On or Off. **Note:** If you select DHCP Off, complete the IP Address, Subnet Mask, Gateway, and DNS fields.
IP Address	Enter a valid IP address if DHCP is turned off.
Subnet Mask	Enter a valid Subnet Mask if DHCP is turned off.
Gateway	Enter a valid Gateway address if DHCP is turned off.
DNS	Enter a valid DNS name if DHCP is turned off.
Apply	Press ↵ (Enter) / ► to confirm settings.

LAN_RJ45

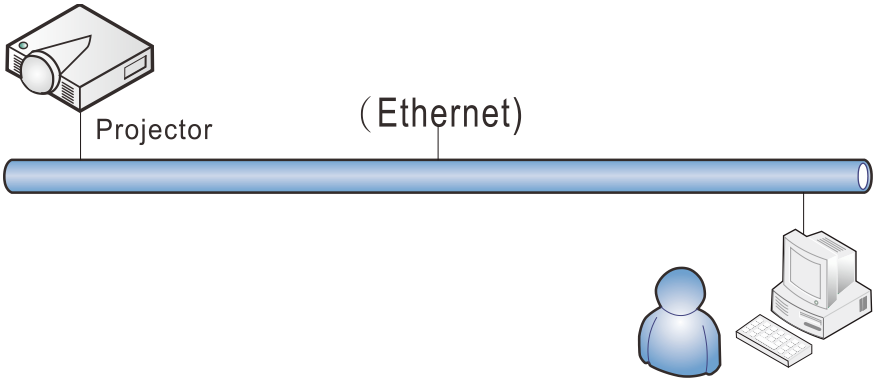

Wired LAN Terminal functionalites

Remote control and monitoring of a projector from a PC (or Laptop) via wired LAN is also possible. Compatibility with Crestron / AMX (Device Discovery) / Extron control boxes enables not only collective projector management on a network but also management from a control panel on a PC (or Laptop) browser screen.

★ Crestron is a registered trademark of Crestron Electronics, Inc. of the United States.

★ Extron is a registered trademark of Extron Electronics, Inc. of the United States.

★ AMX is a registered trademark of AMX LLC of the United States.

★ PJLink applied for trademark and logo registration in Japan, the United States of America, and other countries by JBMIA.

Supported External Devices

This projector is supported by the specified commands of the Crestron Electronics controller and related software (ex, RoomView ®).
http://www.crestron.com/

This projector is supported by AMX (Device Discovery).
http://www.amx.com/

This projector is compliant to support Extron device(s) for reference.
http://www.extron.com/

This projector supports all commands of PJLink Class1 (Version 1.00).
http://pjlink.jbmia.or.jp/english/

For more detail of information about the diverse types of external devices which can be connected to the LAN/RJ45 port and remote/control the projector, as well as the related control commands supporting for each external device, kindly please get contact with the Support-Service team directly.

LAN RJ45

1. Connect an RJ45 cable to RJ45 ports on the projector and the PC (Laptop).

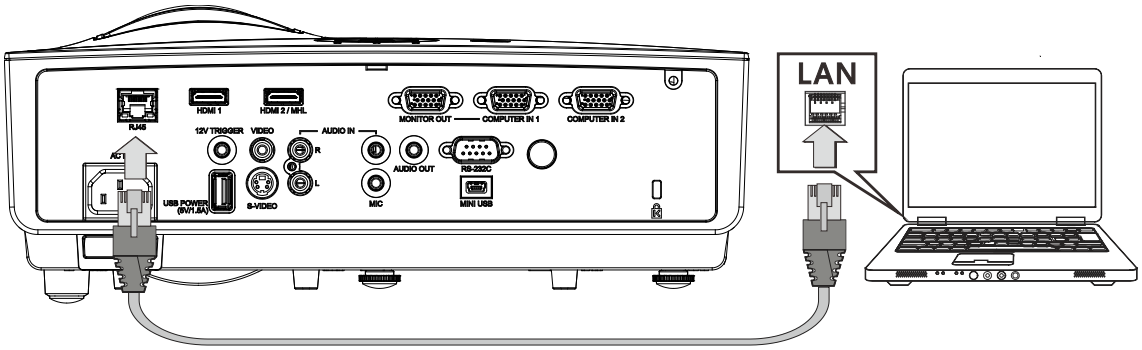

2. On the PC (Laptop), select **Start** → **Control Panel** →**Network and Internet.**

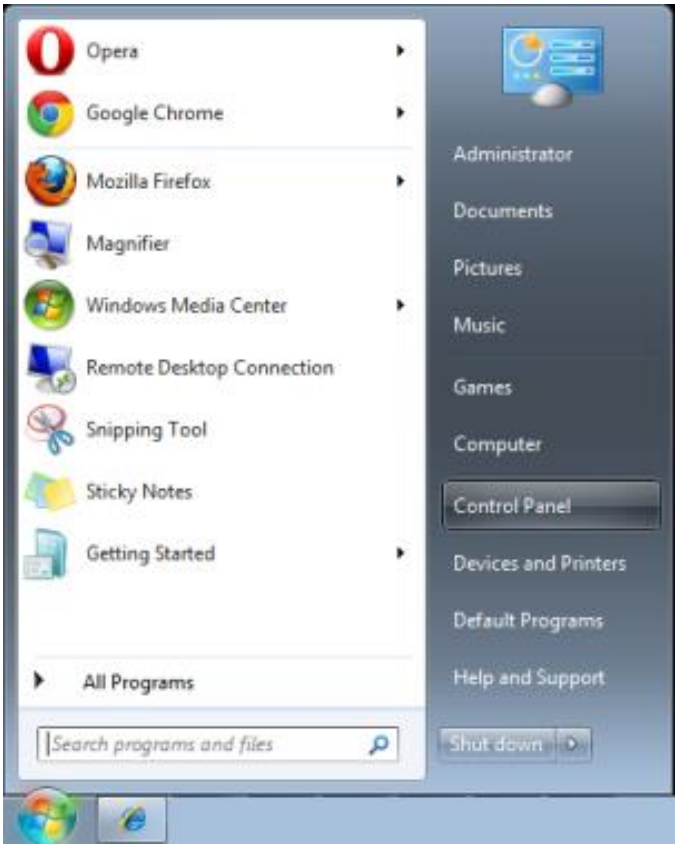

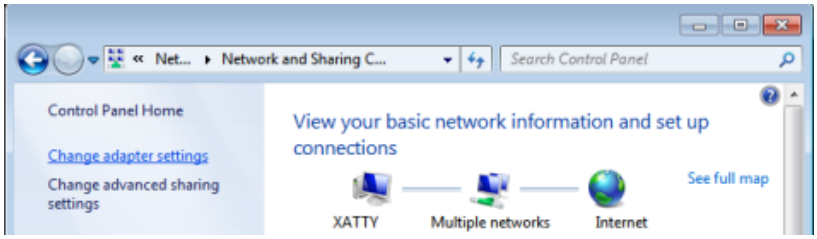

3. Right-click on **Local Area Connection**, and select **Properties**.

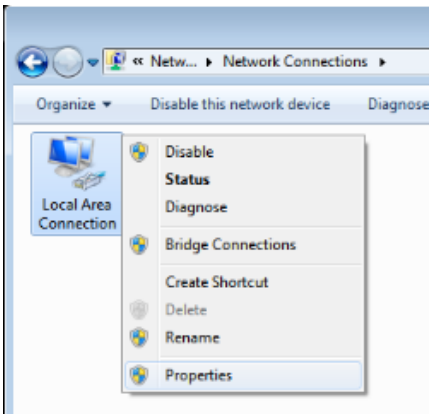

4. In the **Properties** window, select the **Networking** tab, and select **Internet Protocol (TCP/IP)**.
5. Click **Properties**.

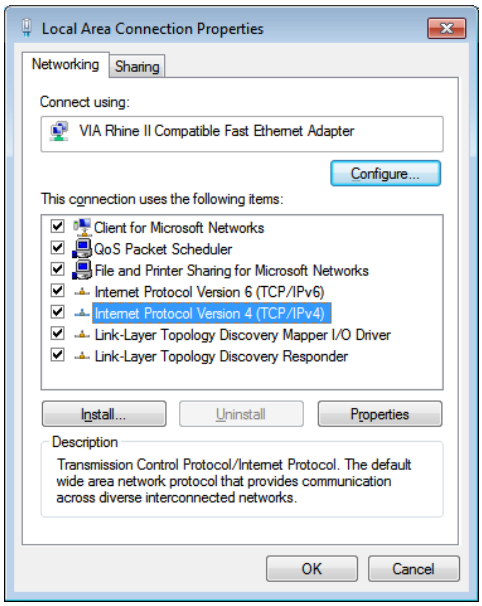

6. Click **Use the following IP address** and fill in the IP address and Subnet mask, then click **OK**.

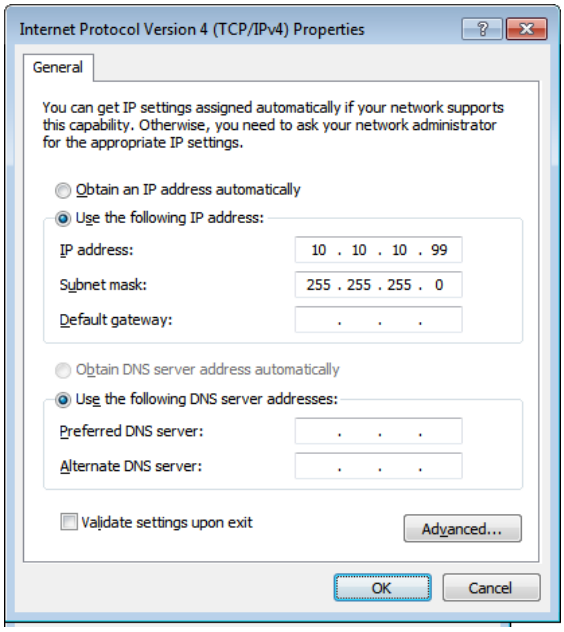

7. Press the **Menu** button on the projector.
8. Select **Settings2**→ **Advanced1** → **Network**
9. After getting into **Network**, input the following:
   - DHCP: Off
   - IP Address: 10.10.10.10
   - Subnet Mask: 255.255.255.0
   - Gateway: 0.0.0.0
   - DNS Server: 0.0.0.0
10. Press ↵ (Enter) / ► to confirm settings.

    Open a web browser
    (for example, Microsoft Internet Explorer with Adobe Flash Player 9.0 or higher).

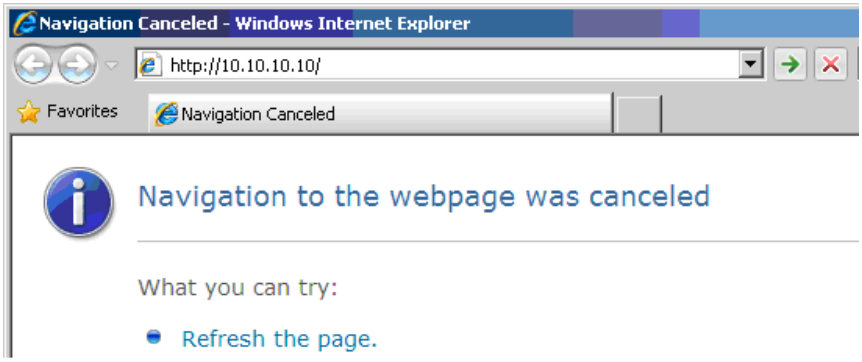

11. In the Address bar, input the IP address: 10.10.10.10.
12. Press ↵ (Enter) / ►.

    The projector is setup for remote management. The LAN/RJ45 function displays as follows.

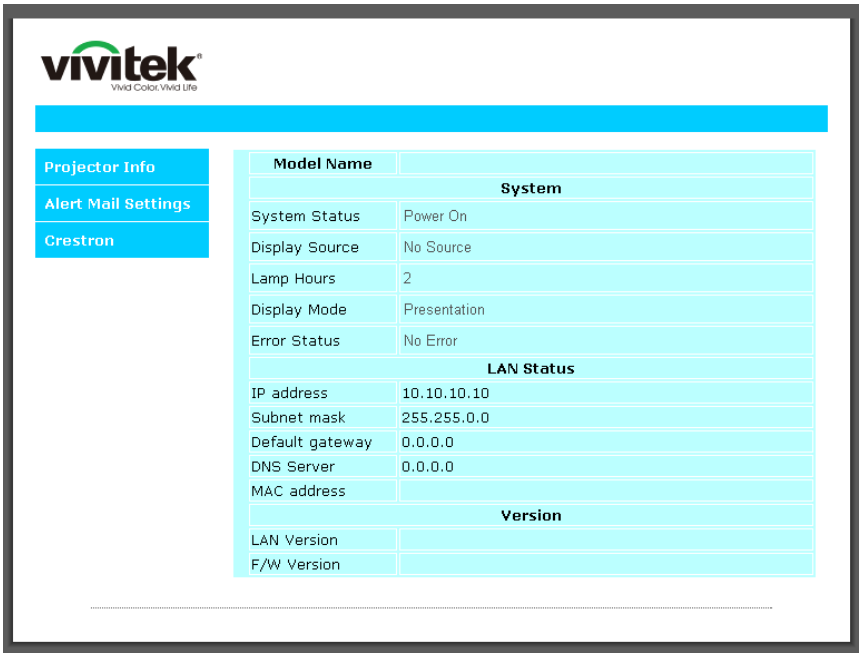

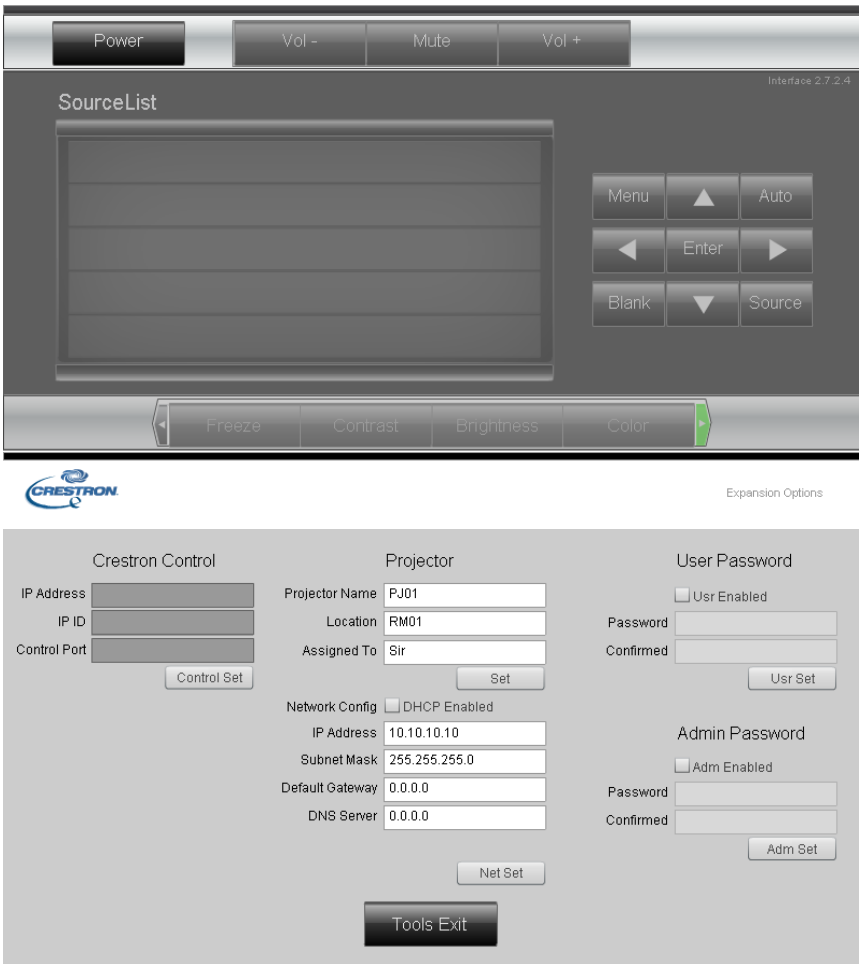

CATEGORY	ITEM	INPUT-LENGTH
Crestron Control	IP Address	15
	IP ID	3
	Port	5
Projector	Projector Name	10
	Location	10
	Assigned To	10
Network Configuration	DHCP (Enabled)	(N/A)
	IP Address	15
	Subnet Mask	15
	Default Gateway	15
	DNS Server	15
User Password	Enabled	(N/A)
	New Password	10
	Confirm	10
Admin Password	Enabled	(N/A)
	New Password	10
	Confirm	10

For more information, please visit http://www.crestron.com.

Preparing Email Alerts

1. Make sure that user can access the homepage of LAN RJ45 function by web browser (for example, Microsoft Internet Explorer v6.01/v8.0).
2. From the Homepage of LAN/RJ45, click **Alert Settings**.

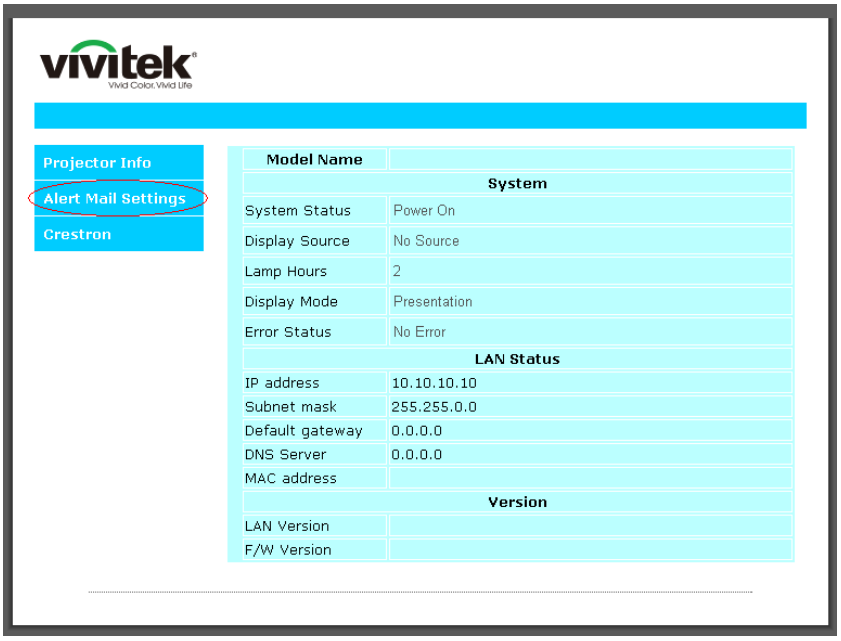

3. By default, these input boxes in **Alert Setting**s are blank.

4. For Sending alert mail, input the following:

   The **SMTP** field is the mail server for sending out email (SMTP protocol). This is a required field.

   The **To** field is the recipient's email address (for example, the projector administrator). This is a required field.

   The **Cc** field sends a carbon copy of the alert to the specified email address. This is an optional field (for example, the projector administrator's assistant).

   The **From** field is the sender's email address (for example, the projector administrator). This is a required field.

   Select the alert conditions by checking the desired boxes.

Note: *Fill in all fields as specified. User can click* ***Send Test Mail*** *to test what setting is correct. For successful sending an e-mail alert, you must select alert conditions and enter a correct e-mail address.*

RS232 by Telnet Function

Besides projector connected to RS232 interface with "Hyper-Terminal" communication by dedicated RS232 command control, there is alternative RS232 command control way, so called "RS232 by TELNET" for LAN/RJ45 interface.

Quick Start-Guide for "RS232 by TELNET"

Check and get the IP-Address on OSD of the projector.

Make sure that laptop/PC can access the web-page of the projector.

Make sure that "Windows Firewall" setting to be disabled in case of "TELNET" function filtering out by laptop/PC.

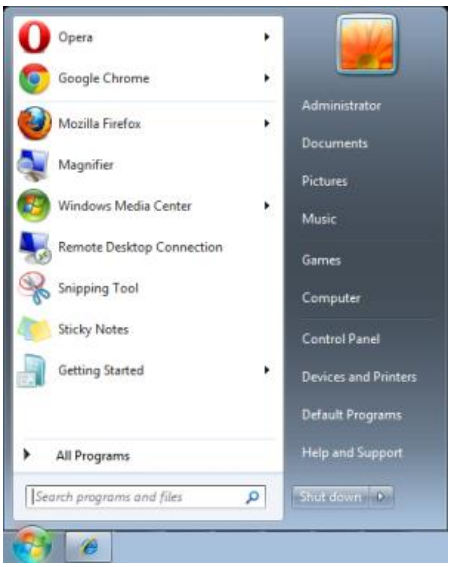

Start => All Programs => Accessories => Command Prompt

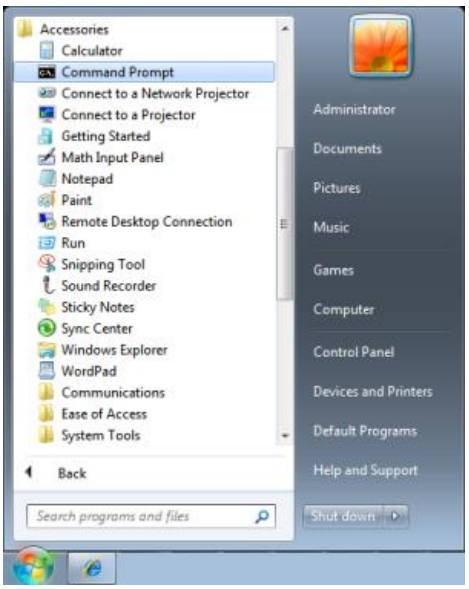

Input the command format like the below:

telnet ttt.xxx.yyy.zzz 23 ("Enter" key pressed)

(**ttt.xxx.yyy.zzz**: IP-Address of the projector)

If Telnet-Connection ready, and user can have RS232 command input, then "Enter" key pressed, the RS232 command will be workable.

How to have TELNET enabled in Windows VISTA / 7

By default installation for Windows VISTA, "TELNET" function is not included. But end-user can have it by way of "Turn Windows features On or Off" to be enabled.

Open "Control Panel" in Windows VISTA

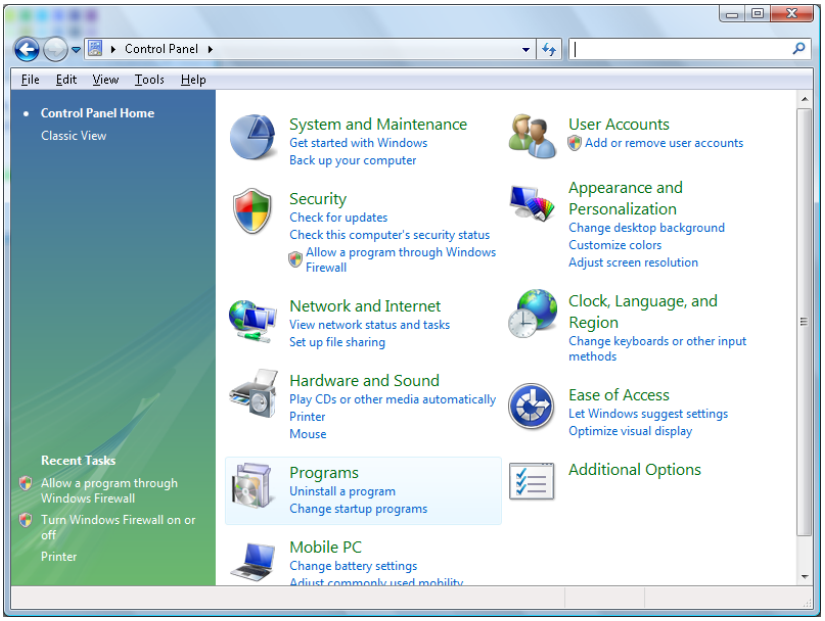

Open "Programs"

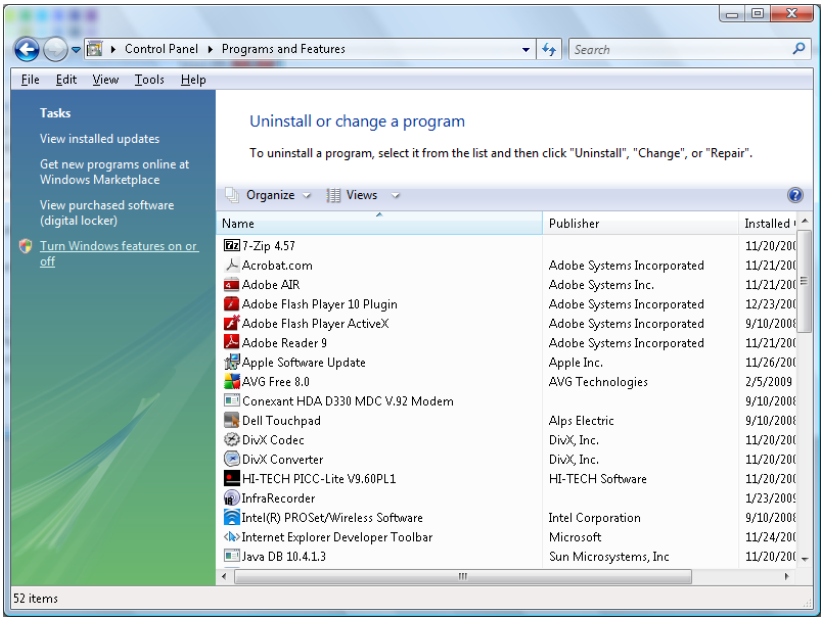

Select "Turn Windows features on or off" to open

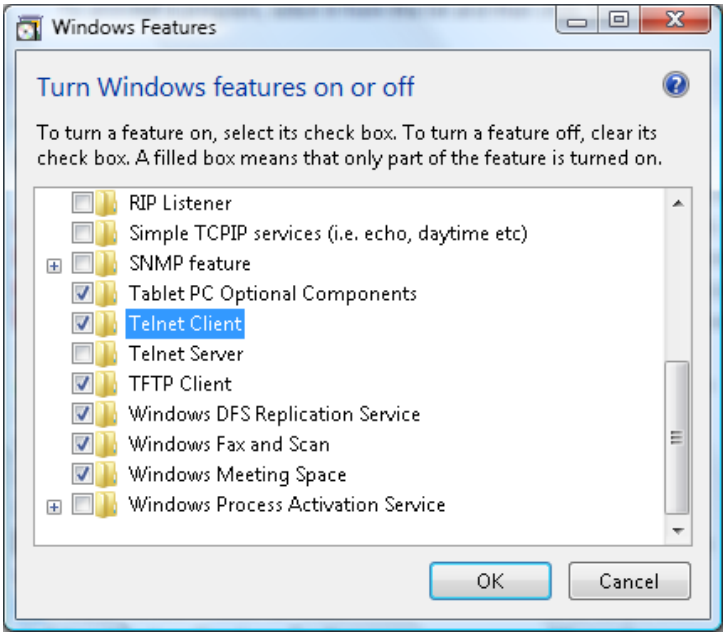

Have "Telnet Client" option checked, then press "OK" button.

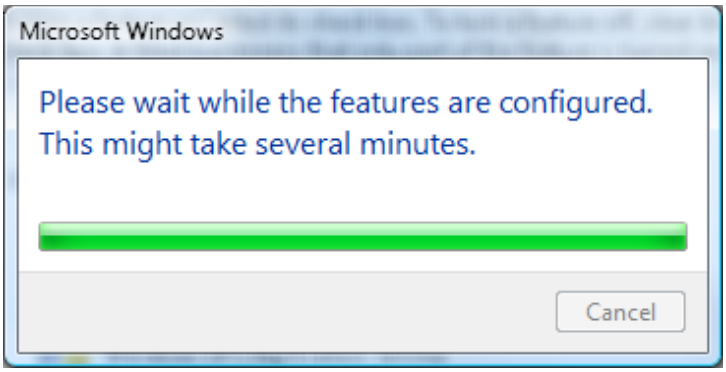

Specsheet for "RS232 by TELNET" :

1. Telnet: TCP
2. Telnet port: 23

   (for more detail, kindly please get contact with the service agent or team)
3. Telnet utility: Windows "TELNET.exe" (console mode)
4. Disconnection for RS232-by-Telnet control normally: Close Windows Telnet utility directly after TELNET connection ready
5. Limitation 1 for Telnet-Control: there is less than 50 bytes for successive network payload for Telnet-Control application.

   Limitation 2 for Telnet-Control: there is less than 26 bytes for one complete RS232 command for Telnet-Control.

   Limitation 3 for Telnet-Control: Minimum delay for next RS232 command must be more than 200 (ms).

   (*, In Windows built-in "TELNET.exe" utility, "Enter" key pressed will have "Carriage-Return" and "New-Line" code.)

Advanced 2 Feature

Press the **Menu** button to open the **OSD** menu. Press ◄► to move to the **Settings 2** menu. Press ▲▼ to move to the **Advanced 2** menu and then press **Enter** or ►. Press ▲▼ to move up and down in the **Advanced 2** menu. Press ◄► to enter and change values for setting.

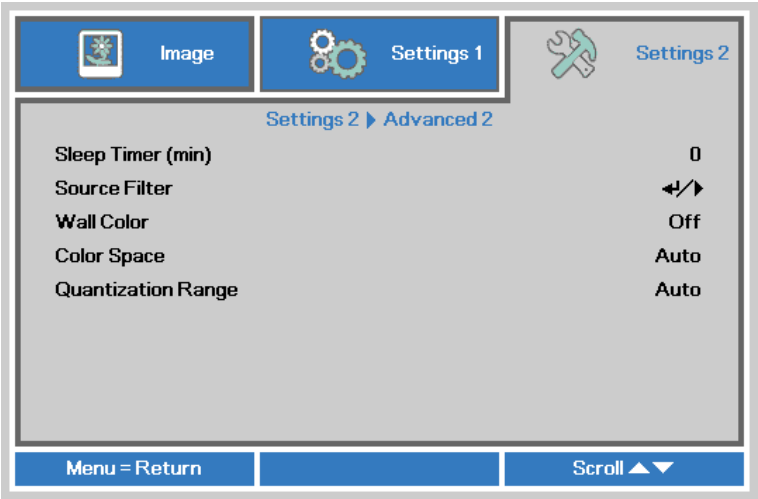

ITEM	DESCRIPTION
Sleep Timer	Press the cursor ◄► buttons to enter and set Sleep timer. The projector automatically turns off after the preset period of time.
Source Filter	Press Enter/ ► to enter the Source Filter menu. See page 47 for more information on *Source Filter*.
Wall Color	Press the cursor ◄► button to enable or disable the wall color function.
Color Space	Press the cursor ◄► button to enter and adjust the Color Space.
Quantization Range	Press the cursor ◄► button to enter and adjust the Quantization Range

Source Filter

Press the **ENTER** button to enter the **Source Filter** sub menu.

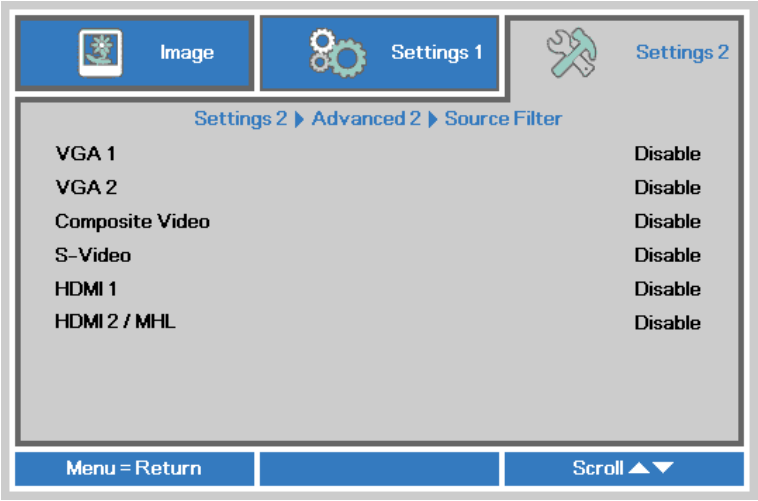

ITEM	DESCRIPTION
VGA1	Press the ◄► buttons to enter and enable or disable the VGA1 source.
VGA2	Press the ◄► buttons to enter and enable or disable the VGA2 source.
Composite Video	Press the ◄► buttons to enter and enable or disable the Composite Video source.
S-Video	Press the ◄► buttons to enter and enable or disable the S-Video source.
HDMI 1	Press the ◄► buttons to enter and enable or disable the HDM 1 source.
HDMI 2 / MHL	Press the ◄► buttons to enter and enable or disable the HDMI 2 / MHL-compatible source.

Replacing the Projection Lamp

The projection lamp should be replaced when it burns out. It should only be replaced with a certified replacement part, which you can order from your local dealer.

Important:

a. *The projection lamp used in this product contains a small amount of mercury.*

b. *Do not dispose this product with general household waste.*

c. *Disposal of this product must be carried out in accordance with the regulations of your local authority.*

Warning:

Be sure to turn off and unplug the projector about one hour before replacing the lamp. Failure to do so could result in a severe burn.

Caution:

In rare cases the lamp bulb may burn out during normal operation and cause glass dust or shards to be discharged outward from the rear exhaust vent.

Do not inhale or do not touch glass dust or shards. Doing so could result in injury.

Always keep your face away from the exhaust vent so that you do not suffer from the gas and broken shards of the lamp.

When removing the lamp from a ceiling-mounted projector, make sure that no one is under the projector. Glass fragments could fall if the lamp has been burned out.

IF A LAMP EXPLODES

If a lamp explodes, the gas and broken shards may scatter inside the projector and they may come out of the exhaust vent. The gas contains toxic mercury.

Open windows and doors for ventilation.

If you inhale the gas or the shards of the broken lamp enter your eyes or mouth, consult the doctor immediately.

1. Remove two screws on the lamp compartment cover.

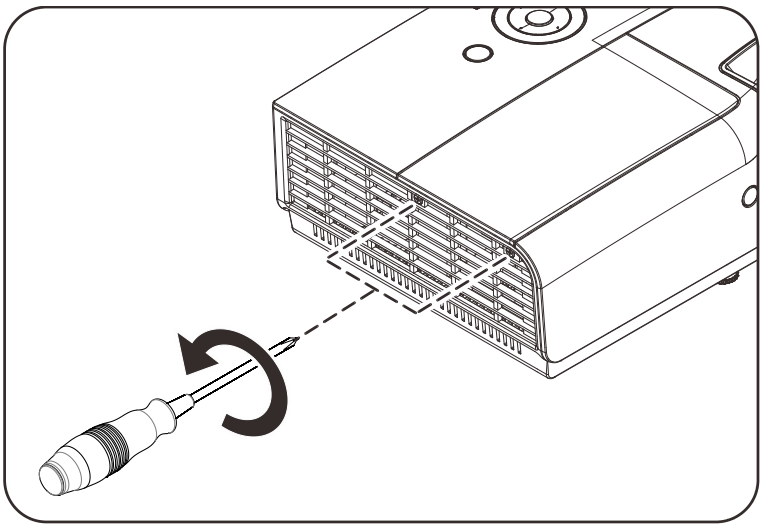

2. Remove the lamp compartment cover.

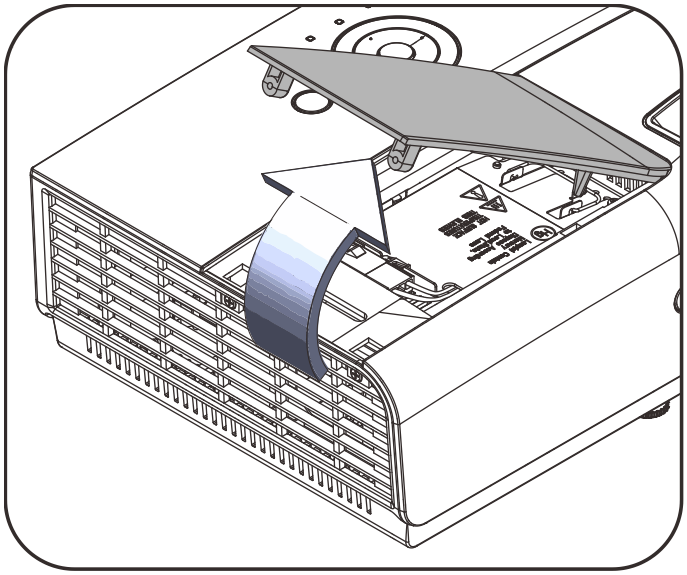

3. Disconnect the lamp connector

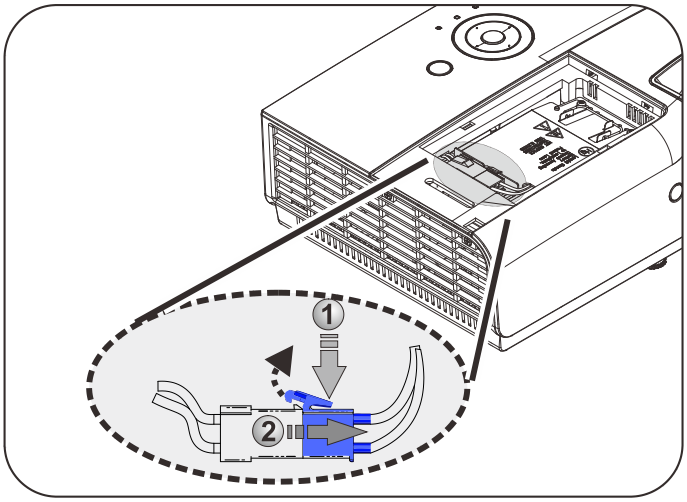

4. Remove the two screws from the lamp module.

5. Lift the module handle up.

6. Pull firmly on the module handle to remove the lamp module.

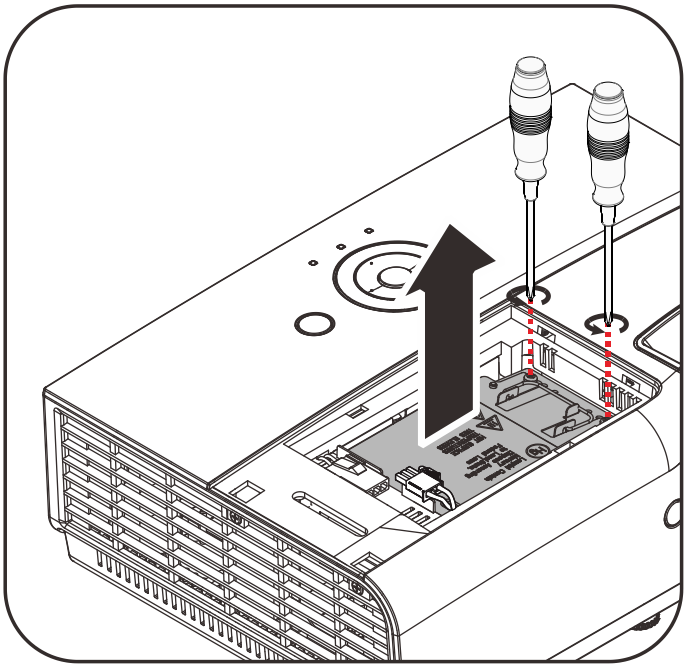

7. Reverse steps 1 to 6 to install the new lamp module.
While installing, align the lamp module and ensure it is level to avoid damage.

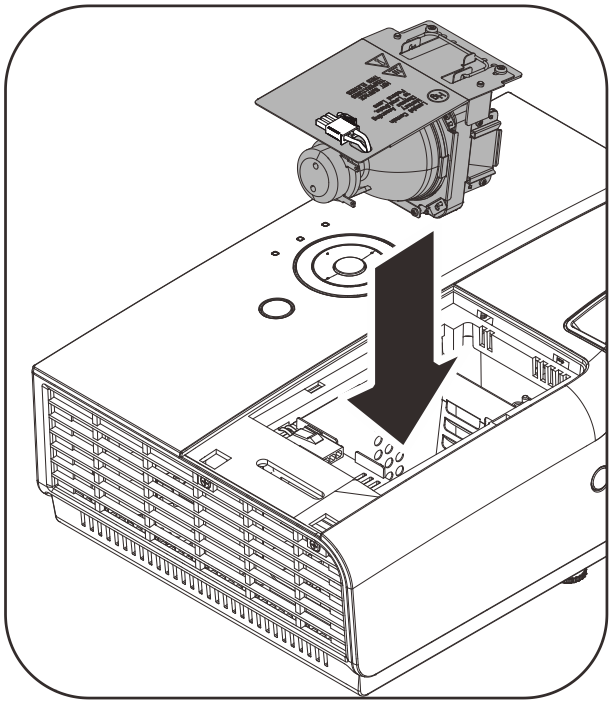

Note:
The lamp module must sit securely in place before tightening the screws.

The lamp connector must be connected properly and place as drawing before Lamp compartment cover installation back.

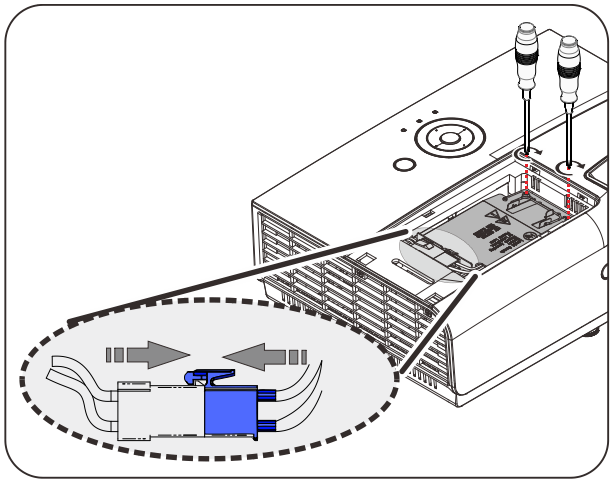

Warning:
Lamp Connector must be installed flush with the connector base as shown in the image below.
A gap between the Lamp Connector and the connector base will cause damage to the projector.
The following images illustrate correct and incorrect Lamp Connector installations.

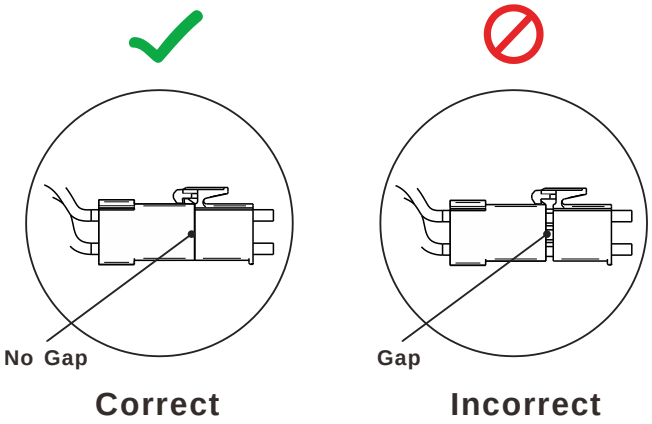

Resetting the Lamp

After replacing the lamp, you should reset the lamp hour counter to zero. Refer to the following:

1. Press the **MENU** button to open the OSD menu.

2. Press the cursor ◄► button to move to the **Settings 2** menu. Press the cursor button to move down to **Advanced 1** and press enter.

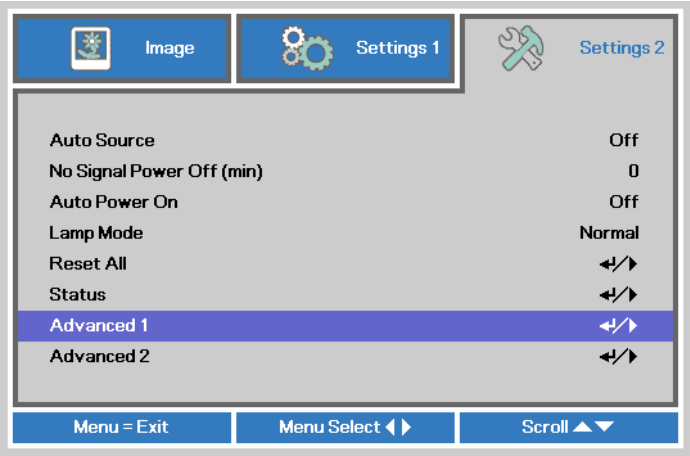

3. Press the cursor ▼▲ button to move down to **Lamp Hour Reset**.

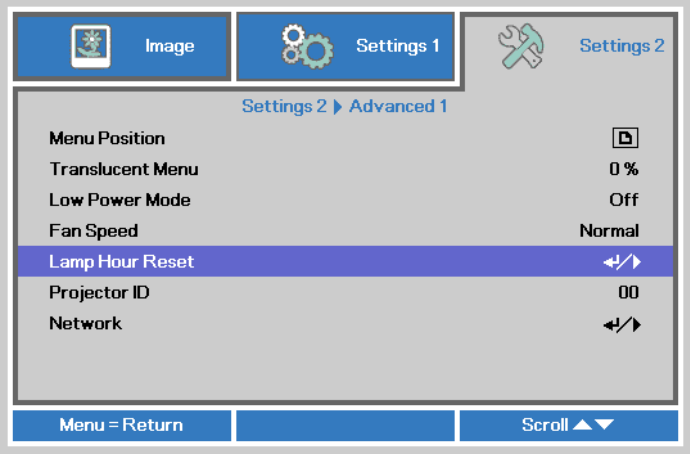

4. Press the cursor ► or Enter button.

A message screen appears.

5. Press ▼▲◄► buttons to reset the lamp hour.

6. Press the **MENU** button to get back to **Settings 2**.

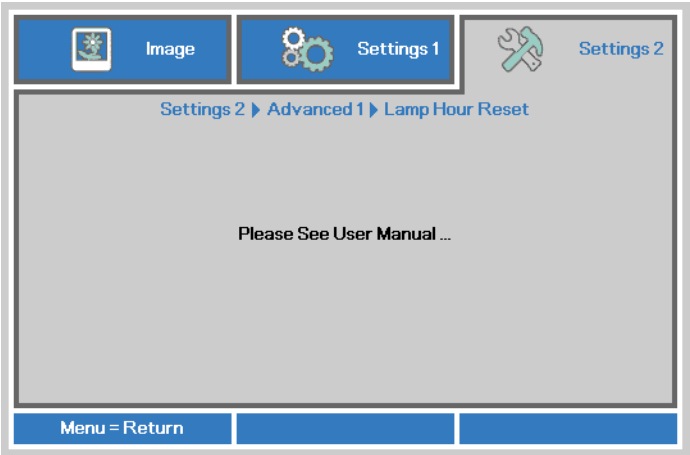

Cleaning the Projector

Cleaning the projector to remove dust and grime will help ensure trouble-free operation.

Warning:

1. *Be sure to turn off and unplug the projector about one hour before cleaning. Failure to do so could result in a severe burn.*

2. *Use only a dampened cloth when cleaning. Do not allow water to enter the ventilation openings on the projector.*

3. *If a little water gets into the projector interior while cleaning, leave unplugged in a well-ventilated room for several hours before using.*

4. *If a lot of water gets into the projector interior when cleaning, have the projector serviced.*

Cleaning the Lens

You can purchase optic lens cleaner from most camera stores. Refer to the following to clean the projector lens.

1. Apply a little optic lens cleaner to a clean soft cloth. (Do not apply the cleaner directly to the lens.)
2. Lightly wipe the lens in a circular motion.

Caution:

1. *Do not use abrasive cleaners or solvents.*

2. *To prevent discoloration or fading, avoid getting cleaner on the projector case.*

Cleaning the Case

Refer to the following to clean the projector case.

1. Wipe off dust with a clean dampened cloth.
2. Moisten the cloth with warm water and mild detergent (such as used to wash dishes), and then wipe the case.
3. Rinse all detergent from the cloth and wipe the projector again.

Caution:

To prevent discoloration or fading of the case, do not use abrasive alcohol-based cleaners.

Using the Kensington Lock

Using the Kensington Lock

If you are concerned about security, attach the projector to a permanent object with the Kensington slot and a security cable.

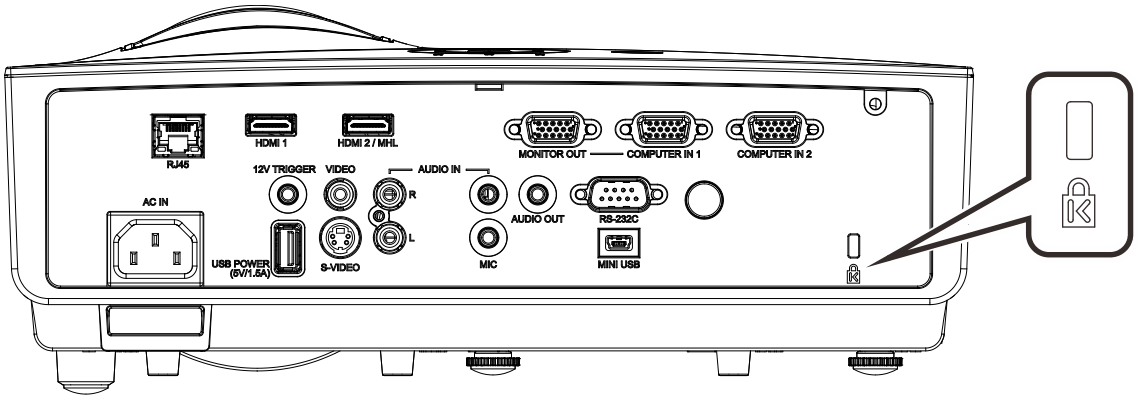

Note:
Contact your vendor for details on purchasing a suitable Kensington security cable.
The security lock corresponds to Kensington's MicroSaver Security System. If you have any comment, contact: Kensington, 2853 Campus Drive, San Mateo, CA 94403, U.S.A. Tel: 800-535-4242, http://www.Kensington.com.

Using the Security Bar

In addition to the password protection function and the Kensington lock, the Security Bar helps protect the projector from unauthorized removal. See the following picture.

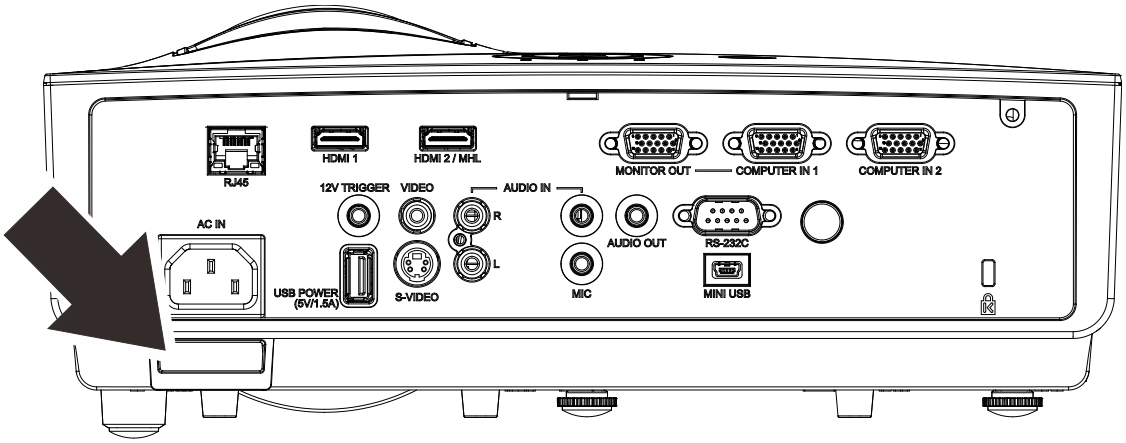

TROUBLESHOOTING

Common problems and solutions

These guidelines provide tips to deal with problems you may encounter while using the projector. If the problem remains unsolved, contact your dealer for assistance.

Often after time spent troubleshooting, the problem is traced to something as simple as a loose connection. Check the following before proceeding to the problem-specific solutions.

- *Use some other electrical device to confirm that the electrical outlet is working.*
- *Ensure the projector is turned on.*
- *Ensure all connections are securely attached.*
- *Ensure the attached device is turned on.*
- *Ensure a connected PC is not in suspending mode.*
- *Ensure a connected notebook computer is configured for an external display.*
  (This is usually done by pressing an Fn-key combination on the notebook.)

Tips for Troubleshooting

In each problem-specific section, try the steps in the order suggested. This may help you to solve the problem more quickly.

Try to pin point the problem and thus avoid replacing non-defective parts.
For example, if you replace batteries and the problem remains, put the original batteries back and go to the next step.

Keep a record of the steps you take when troubleshooting: The information may be useful when calling for technical support or for passing on to service personnel.

LED Error Messages

Error Code Messages	Power LED Green	Lamp LED Red	Temp LED Red
System Initial	Flash	OFF	OFF
Ready to Power on (Standby)	ON	OFF	OFF
System Power on	Flash	OFF	OFF
Lamp Lit , System stable	ON	OFF	OFF
Cooling	Flashing	OFF	OFF
1W MCU detects scaler stops working (initial fail)	2 blinks	OFF	OFF
Over Temperature	OFF	OFF	ON
Thermal Break Sensor error	4 blinks	OFF	OFF
Lamp Fail	5 blinks	OFF	OFF
Lamp Temperature shut down	5 blinks	1 blinks	OFF
Lamp Short circuit in output detected	5 blinks	2 blinks	OFF
Lamp End of lamp life detected	5 blinks	3 blinks	OFF
Lamp did not ignite	5 blinks	4 blinks	OFF
Lamp extinguished normal	5 blinks	5 blinks	OFF
Lamp extinguished run-up	5 blinks	6 blinks	OFF
Lamp voltage too low	5 blinks	7 blinks	OFF
Lamp ballast Fail	5 blinks	8 blinks	OFF
Lamp ballast Communication error	5 blinks	10 blinks	OFF
Fan-1 error	6 blinks	1 blinks	OFF
Fan-2 error	6 blinks	2 blinks	OFF
Fan-3 error	6 blinks	3 blinks	OFF
Fan-4 error	6 blinks	4 blinks	OFF
Case Open	7 blinks	OFF	OFF
DAD1000 error	8 blinks	OFF	OFF
Color wheel error	9 blinks	OFF	OFF

In the event of an error, please disconnect the AC power cord and wait for one (1) minute before restarting the projector. If the Power or Lamp LEDs are still blinking or any other situation that isn't listed in the chart above, please contact your service center.

Image Problems

Problem: No image appears on the screen

1. Verify the settings on your notebook or desktop PC.
2. Turn off all equipment and power up again in the correct order.

Problem: The image is blurred

1. Adjust the **Focus** on the projector.
2. Press the **Auto** button on the remote control.
3. Ensure the projector-to-screen distance is within the specified range.
4. Check that the projector lens is clean.

Problem: The image is wider at the top or bottom (trapezoid effect)

1. Position the projector so it is as perpendicular to the screen as possible.
2. Use the **Keystone** button on the remote control to correct the problem.

Problem: The image is reversed

Check the **Projection** setting on the **Settings 1** menu of the OSD.

Problem: The image is streaked

1. Set the **Frequency** and **Tracking** settings on the **Image->Computer** menu of the OSD to the default settings.
2. To ensure the problem is not caused by a connected PC's video card, connect to another computer.

Problem: The image is flat with no contrast

Adjust the **Contrast** setting on the **Image** menu of the OSD.

Problem: The color of the projected image does not match the source image.

Adjust the **Color Temperature** and **Gamma** settings on the **Image->Advanced** menu of the OSD.

Lamp Problems

Problem: There is no light from the projector

1. Check that the power cable is securely connected.
2. Ensure the power source is good by testing with another electrical device.
3. Restart the projector in the correct order and check that the Power LED is on.
4. If you have replaced the lamp recently, try resetting the lamp connections.
5. Replace the lamp module.
6. Put the old lamp back in the projector and have the projector serviced.

Problem: The lamp goes off

1. Power surges can cause the lamp to turn off. Re-plug power cord. When the Power LED is on, press the power button.
2. Replace the lamp module.
3. Put the old lamp back in the projector and have the projector serviced.

Remote Control Problems

Problem: The projector does not respond to the remote control

1. Direct the remote control towards remote sensor on the projector.
2. Ensure the path between remote and sensor is not obstructed.
3. Turn off any fluorescent lights in the room.
4. Check the battery polarity.
5. Replace the battery.
6. Turn off other Infrared-enabled devices in the vicinity.
7. Have the remote control serviced.

Audio Problems

Problem: There is no sound

1. Adjust the volume on the remote control.
2. Adjust the volume of the audio source.
3. Check the audio cable connection.
4. Test the source audio output with other speakers.
5. Have the projector serviced.

Problem: The sound is distorted

1. Check the audio cable connection.
2. Test the source audio output with other speakers.
3. Have the projector serviced.

Having the Projector Serviced

If you are unable to solve the problem, you should have the projector serviced. Pack the projector in the original carton. Include a description of the problem and a checklist of the steps you took when trying to fix the problem: The information may be useful to service personnel. For servicing, return the projector to the place you purchased it.

HDMI Q & A

Q. What is the difference between a "Standard" HDMI cable and a "High-Speed" HDMI cable?

Recently, HDMI Licensing, LLC announced that cables would be tested as Standard or High-Speed cables.

- Standard (or "category 1") HDMI cables have been tested to perform at speeds of 75Mhz or up to 2.25Gbps, which is the equivalent of a 720p/1080i signal.
- High Speed (or "category 2") HDMI cables have been tested to perform at speeds of 340Mhz or up to 10.2Gbps, which is the highest bandwidth currently available over an HDMI cable and can successfully handle 1080p signals including those at increased color depths and/or increased refresh rates from the Source. High-Speed cables are also able to accommodate higher resolution displays, such as WQXGA cinema monitors (resolution of 2560 x 1600).

Q. How do I run HDMI cables longer than 10 meters?

There are many HDMI Adopters working on HDMI solutions that extend a cable's effective distance from the typical 10 meter range to much longer lengths. These companies manufacture a variety of solutions that include active cables (active electronics built into cables that boost and extend the cable's signal), repeaters, amplifiers as well as CAT5/6 and fiber solutions.

Q. How can I tell if a cable is an HDMI certified cable?

All HDMI products are required to be certified by the manufacturer as part of the HDMI Compliance Test Specification. However, there may be instances where cables bearing the HDMI logo are available but have not been properly tested. HDMI Licensing, LLC actively investigates these instances to ensure that the HDMI trademark is properly used in the market. We recommend that consumers buy their cables from a reputable source and a company that is trusted.

For more detail information check http://www.hdmi.org/learningcenter/faq.aspx#49

SPECIFICATIONS

Specifications

Model	DX831 / DX931	DW832 / DW932
Display type	TI DMD 0.55" XGA	TI DMD 0.65" WXGA
Resolution	XGA 1024 x 768	WXGA 1280 x 800
Projection distance	1.2m~10m	
Projection screen size	21.5"~269.7"	25.3" ~ 317.99"
Projection lens	Manual Focus/Manual Zoom	
Zoom ratio	1.5x	
Vertical keystone correction	+/- 40 Degrees	
Projection methods	Front, Rear, Desktop/Ceiling (Rear, Front)	
Data compatibility	VGA, SVGA, XGA, SXGA, SXGA+, UXGA, WUXGA@60hz, Mac	
SDTV/EDTV/ HDTV	480i, 576i, 480p, 576p, 720p, 1080i, 1080p	
Video compatibility	NTSC, PAL, SECAM	
H-Sync	15, 31~91.4KHz	
V-Sync	24~30Hz, 47~120Hz	
Safety certification	FCC-B, cUL, UL, NOM, CCC, CECP, PSB, EAC, KC, CE, C-tick, UL-AR, CB, CU	
Operation temperature	5° ~ 40°C	
Dimensions	314 mm (W) x 213 mm (D) x 126 mm (H)	
AC Input	AC Universal 100-240V	
Power consumption	410W (Normal), 320W (ECO), <0.5W (Standby), < 2W (on by Lan)	
Lamp	310W (Normal) / 245W (Eco)	
Audio speaker	10W mono speaker x 1	
Input Terminals	VGA in x 2	
	Composite Video x 1	
	S-Video x 1	
	HDMI x 1, HDMI (with MHL) x 1	
	Mini-jack stereo x 1	
	RCA Stereo Audio LR x 1	
	Microphone (mini-jack) x1	
Output Terminals	VGA out x 1	
	PC audio out (mini-jack) x 1	
	USB type A power Only x1	
Control Terminals	RS-232C	
	RJ45	
	DC 12V trigger (3.5mm Jack)	
	USB (Type mini B) - service only	
Security	Kensington lock	

Note: *For questions regarding product specifications, please contact your local distributor.*

Projection Distance vs. Projection Size

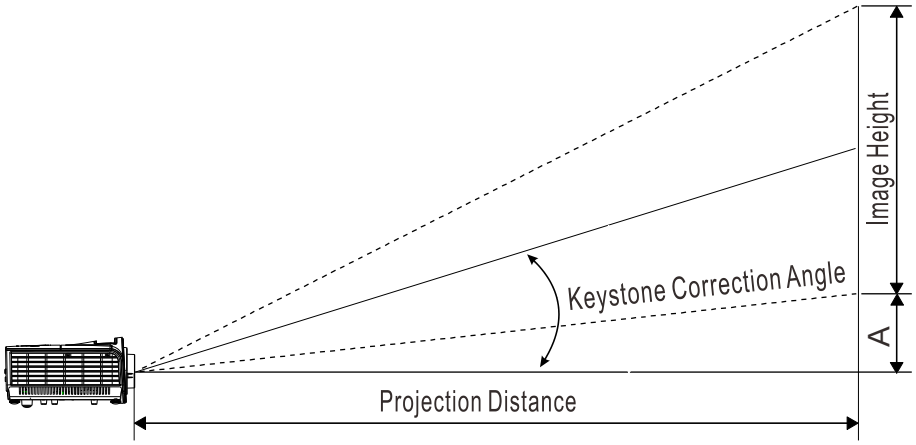

Projection Distance and Size Table

XGA

DX831 / DX931							
IMAGE DIAGONAL	IMAGE WIDTH		IMAGE HEIGHT		PROJECTION DISTANCE		OFFSET-A
INCH	CM	INCH	CM	INCH	CM	INCH	MM
40	81.3	32	61.0	24	186.1	73.3	85
60	121.9	48	91.4	36	279.2	109.9	127
100	203.2	80	152.4	60	465.3	183.2	212
150	304.8	120	228.6	90	698.0	274.8	318
200	406.4	160	304.8	120	930.7	366.4	424
250	508	200	381	150	1163.3	458	530
300	609.6	240	457.2	180	1396.0	549.6	636

WXGA

DW832 / DW932							
IMAGE DIAGONAL	IMAGE WIDTH		IMAGE HEIGHT		PROJECTION DISTANCE		OFFSET-A
INCH	CM	INCH	CM	INCH	CM	INCH	MM
40	86.2	33.9	53.8	21.2	157.7	62.1	61
60	129.2	50.9	80.8	31.8	236.5	93.1	92
100	215.4	84.8	134.6	53.0	394.2	155.2	153
150	323.1	127.2	201.9	79.5	591.2	232.8	229
200	430.8	169.6	269.2	106.0	788.3	310.4	305
250	538.5	212.0	336.5	132.5	985.4	388.0	382
300	646.2	254.4	403.9	159.0	1182.5	465.6	458

Timing Mode Table

SIGNAL	RESOLUTION	H-SYNC (KHZ)	V-SYNC (HZ)	COMPOSITE / S-VIDEO	COMPONENT	RGB	DVI/ HDMI
NTSC	–	15.734	60.0	O	–	–	–
PAL/SECAM	–	15.625	50.0	O	–	–	–
VESA	720 x 400	37.9	85.0	–	–	O	O
	640 x 480	31.5	60.0	–	–	O	O
	640 x 480	37.9	72.8	–	–	O	O
	640 x 480	37.5	75.0	–	–	O	O
	640 x 480	43.3	85.0	–	–	O	O
	800 x 600	35.2	56.3	–	–	O	O
	800 x 600	37.9	60.3	–	–	O	O
	800 x 600	46.9	75.0	–	–	O	O
	800 x 600	48.1	72.2	–	–	O	O
	800 x 600	53.7	85.1	–	–	O	O
	800 x 600	76.3	120.0	–	–	O	O
	1024 x 768	48.4	60.0	–	–	O	O
	1024 x 768	56.5	70.1	–	–	O	O
	1024 x 768	60.0	75.0	–	–	O	O
	1024 x 768	68.7	85.0	–	–	O	O
	1024 x 768	97,6	120.0	–	–	O	O
	1280 x 720	45.0	60.0	–	–	O	O
	1280 x 720	91.5	119.9	–	–	O	O
	1280 x 800	49.7	59.8	–	–	O	O
	1280 x 800	62.8	74.9	–	–	O	O
	1280 x 800	71.6	84.8	–	–	O	O
	1280 x 800	101.6	119.9	–	–	O	O
	1280 x 1024	64.0	60.0	–	–	O	O
	1280 x 1024	80.0	75.0	–	–	O	O
	1280 x 1024	91.1	85.0	–	–	O	O

SIGNAL	RESOLUTION	H-SYNC (KHZ)	V-SYNC (HZ)	COMPOSITE / S-VIDEO	COMPONENT	RGB	DVI/ HDMI
	1280 x 960	60.0	60.0	—	—	O	O
	1280 x 960	85.9	85.0	—	—	O	O
	1400 x 1050	65.3	60.0	—	—	O	O
	1440 x 900	70.6	75.0	—	—	O	O
	1440 x 900	55.9	60.0	—	—	O	O
	1600 x1200	75.0	60	—	—	O	O
Apple Mac	640 x 480	35.0	66.7	—	—	O	O
	832 x 624	49.7	74.5	—	—	O	O
	1024 x 768	60.2	74.9	—	—	O	O
	1152 x 870	68.7	75.1	—	—	O	O
SDTV	480i	15.734	60.0	—	O	—	O
	576i	15.625	50.0	—	O	—	O
EDTV	576p	31.3	50.0	—	O	—	O
	480p	31.5	60.0	—	O	—	O
HDTV	720p	37.5	50.0	—	O	—	O
	720p	45.0	60.0	—	O	—	O
	1080i	33.8	60.0	—	O	—	O
	1080i	28.1	50.0	—	O	—	O
	1080p	67.5	60.0	—	O	—	O
	1080p	56.3	50.0	—	O	—	O
	1080p	27	24.0	—	O	—	O
	1080p	28	25.0	—	O	—	O
	1080p	33.7	30.0	—	O	—	O

O：Frequency supported

—：Frequency not supported

*：SVGA native resolution of the panel is 800 x 600

XGA native resolution of the panel is 1024 x 768

Resolution others than native resolution may be display with uneven size of text or line.

*：The color of mean Displayable only. (4:3 only)

*：The color of mean may have a little noise is acceptable

*：HDTV timing main check tool is DVD player, VG828 is secondary.

Projector Dimensions

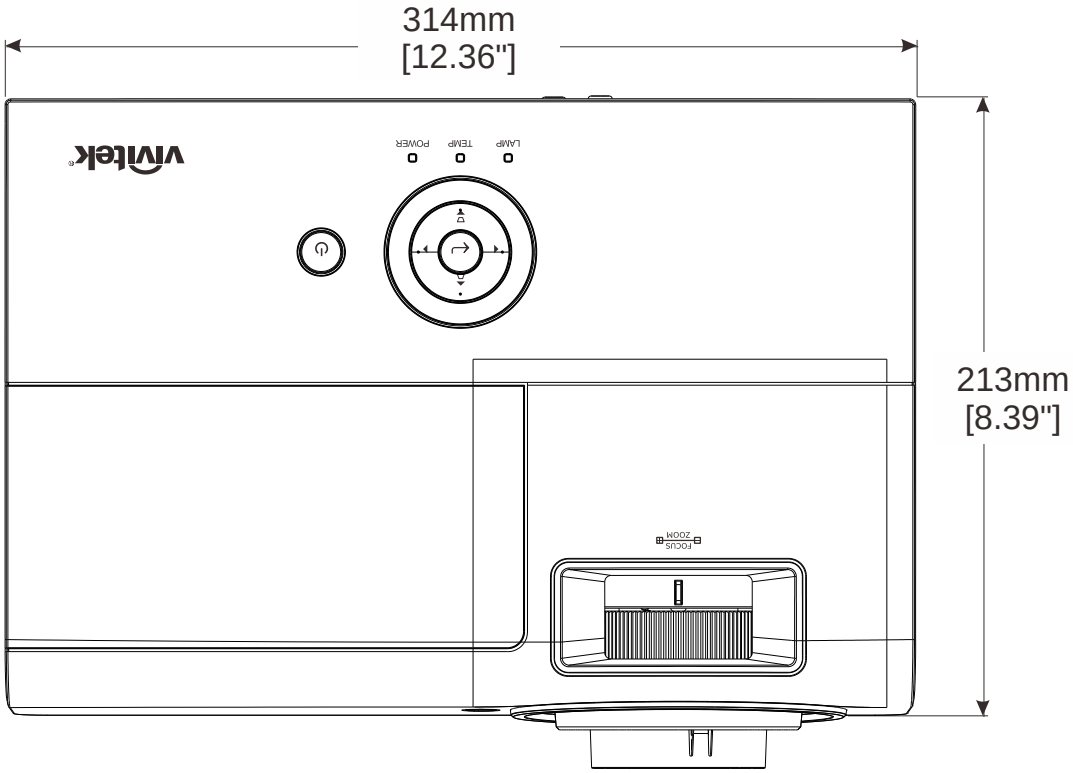

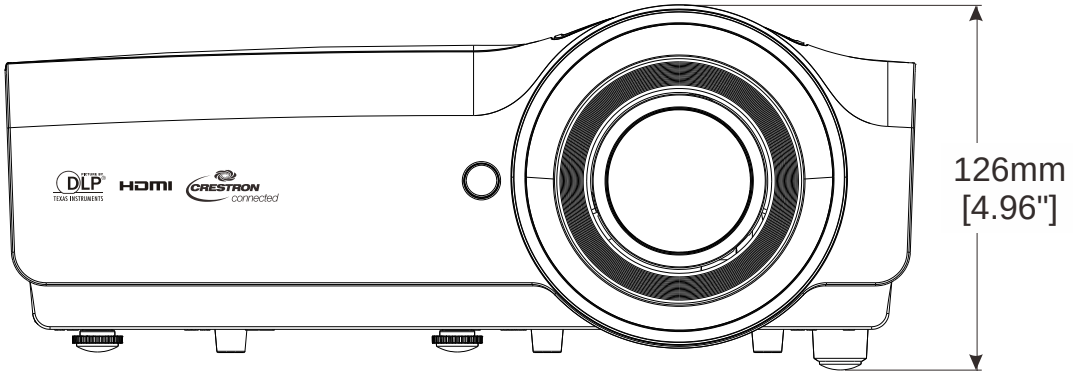

REGULATORY COMPLIANCE

FCC Warning

This equipment has been tested and found to comply with the limits for a Class B digital device pursuant to Part 15 of the FCC Rules. These limits are designed to provide reasonable protection against harmful interference when the equipment is operated in a commercial environment.

This equipment generates, uses, and can radiate radio frequency energy and, if not installed and used in accordance with the instruction manual, may cause harmful interference to radio communications. Operation of this equipment in a residential area is likely to cause harmful interference in which case the user will be required to correct the interference at his/her own expense.

Changes or modifications not expressly approved by the parties responsible for compliance could void the user's authority to operate the equipment.

Canada

This class B digital apparatus complies with Canadian ICES-003.

Safety Certifications

FCC-B, cUL, UL, NOM, CCC, CECP, PSB, EAC, KC, CE, C-tick, UL-AR, CB, CU

APPENDIX I

RS-232C Protocol

RS232 Setting

Baud rate:	**9600**
Parity check:	**None**
Data bit:	**8**
Stop bit:	**1**
Flow Control	**None**

Minimum delay for next command: **1ms**

Control Command Structure

	Header code	Command code	Data code	End code
HEX		**Command**	**Data**	**0Dh**
ASCII	**'V'**	**Command**	**Data**	**CR**

Operation Command

Note:

"CR" mean Carriage Return

XX=00-98, projector's ID, XX=99 is for all projectors

Return Result P=Pass / F=Fail

n: 0:Disable/1: Enable/Value(0~9999)

Command Group 00				
ASCII	**HEX**	**Function**	**Description**	**Return Result**
VXXS0001	56h Xh Xh 53h 30h 30h 30h 31h 0Dh	Power On		P/F
VXXS0002	56h Xh Xh 53h 30h 30h 30h 32h 0Dh	Power Off		P/F
VXXS0003	56h Xh Xh 53h 30h 30h 30h 33h 0Dh	Resync		P/F
VXXG0004	56h Xh Xh 47h 30h 30h 30h 34h 0Dh	Get Lamp Hours		Pn/F
VXXS0005n	56h Xh Xh 53h 30h 30h 30h 35h nh 0Dh	Set Air filter timer	n=0~999999	P/F
VXXG0005	56h Xh Xh 47h 30h 30h 30h 35h 0Dh	Get Air filter timer	n=0~999999	Pn/F
VXXS0006	56h Xh Xh 53h 30h 30h 30h 36h 0Dh	System Reset		P/F
VXXG0007	56h Xh Xh 47h 30h 30h 30h 37h 0Dh	Get System Status	0:Reset 1:Standby 2:Operation 3:Cooling	Pn/F
VXXG0008	56h Xh Xh 47h 30h 30h 30h 38h 0Dh	Get F/W Version		Pn/F
VXXG0009	56h Xh Xh 47h 30h 30h 30h 39h 0Dh	Get Alter EMail		Pn/F
VXXS0009n	56h Xh Xh 53h 30h 30h 30h 39h nh 0Dh	Set Alter Email	n=xxxxxx@xxxx.xxx.xx	P/F

Command Group 01				
ASCII	**HEX**	**Function**	**Description**	**Return Value**
VXXG0101	56h Xh Xh 47h 30h 31h 30h 31h 0Dh	Get Brightness	n=0~100	Pn/F
VXXS0101n	56h Xh Xh 53h 30h 31h 30h 31h nh 0Dh	Set Brightness	n=0~100	P/F
VXXG0102	56h Xh Xh 47h 30h 31h 30h 32h 0Dh	Get Contrast	n=0~100	Pn/F
VXXS0102n	56h Xh Xh 53h 30h 31h 30h 32h nh 0Dh	Set Contrast	n=0~100	P/F
VXXG0103	56h Xh Xh 47h 30h 31h 30h 33h 0Dh	Get Color	n=0~100	Pn/F
VXXS0103n	56h Xh Xh 53h 30h 31h 30h 33h nh 0Dh	Set Color	n=0~100	P/F
VXXG0104	56h Xh Xh 47h 30h 31h 30h 34h 0Dh	Get Tint	n=0~100	Pn/F
VXXS0104n	56h Xh Xh 53h 30h 31h 30h 34h nh 0Dh	Set Tint	n=0~100	P/F
VXXG0105	56h Xh Xh 47h 30h 31h 30h 35h 0Dh	Get Sharpness	0~31	Pn/F
VXXS0105n	56h Xh Xh 53h 30h 31h 30h 35h nh 0Dh	Set Sharpness	0~31	P/F
VXXG0106	56h Xh Xh 47h 30h 31h 30h 36h 0Dh	Get Color Temperature	0:Warm 1:Normal 2:Cold	Pn/F
VXXS0106n	56h Xh Xh 53h 30h 31h 30h 36h nh 0Dh	Set Color Temperature	0:Warm 1:Normal 2:Cold	P/F
VXXG0107	56h Xh Xh 47h 30h 31h 30h 37h 0Dh	Get Gamma	0:1.8 1:2.0 2:2.2 3:2.4 4:B&W 5:Linear	Pn/F
VXXS0107n	56h Xh Xh 53h 30h 31h 30h 37h nh 0Dh	Set Gamma	0:1.8 1:2.0 2:2.2 3:2.4 4:B&W 5:Linear	P/F
VXXG0108	56h Xh Xh 53h 30h 33h 31h 38h 0Dh	Adjust the Display mode	n= 0~7	Pn/F
VXXS0108n	56h Xh Xh 47h 30h 33h 31h 38h nh 0Dh	Adjust the Display mode	0:Presentation 1:Bright 2:Game 3:Movie 4:TV 5:sRGB 6:Blackboard 7:User	P/F

Command Group 02				
ASCII	**HEX**	**Function**	**Description**	**Return Value**
VXXS0201	56h Xh Xh 53h 30h 32h 30h 31h 0Dh	Select RGB		P/F
VXXS0202	56h Xh Xh 53h 30h 32h 30h 32h 0Dh	Select RGB2		P/F
VXXS0203	56h Xh Xh 53h 30h 32h 30h 33h 0Dh	Select DVI		P/F
VXXS0204	56h Xh Xh 53h 30h 32h 30h 34h 0Dh	Select Video		P/F
VXXS0205	56h Xh Xh 53h 30h 32h 30h 35h 0Dh	Select S-Video		P/F
VXXS0206	56h Xh Xh 53h 30h 32h 30h 36h 0Dh	Select HDMI		P/F
VXXS0207	56h Xh Xh 53h 30h 32h 30h 37h 0Dh	Select BNC		P/F
VXXS0208	56h Xh Xh 53h 30h 32h 30h 38h 0Dh	Select Component		P/F
VXXS0209	56h Xh Xh 53h 30h 32h 30h 39h 0Dh	Select HDMI 2		P/F
VXXS0211	56h Xh Xh 53h 30h 32h 31h 30h 0Dh	MEDIA		P/F
VXXS0212	56h Xh Xh 53h 30h 32h 31h 32h 0Dh	Select HDMI 3		P/F
VXXG0220	56h Xh Xh 47h 30h 32h 32h 30h 0Dh	Get Current Source	Return 1:RGB 2:RGB2 3:DVI 4:Video 5:S-Video 6:HDMI 7:BNC 8:Component 9:HDMI 2 11:MEDIA 12:HDMI 3	Pn/F

Command Group 03				
ASCII	**HEX**	**Function**	**Description**	**Return Value**
VXXG0301	56h Xh Xh 47h 30h 33h 30h 31h 0Dh	Get Scaling	0:Fill 1:4:3 2:16:9 3:Letter Box 4:Native 5:2.35:1	Pn/F
VXXS0301n	56h Xh Xh 53h 30h 33h 30h 31h nh 0Dh	Set Scaling	0:Fill 1:4:3 2:16:9 3:Letter Box 4:Native 5:2.35:1	P/F
VXXG0302	56h Xh Xh 47h 30h 33h 30h 32h 0Dh	Get Blank		Pn/F
VXXS0302n	56h Xh Xh 53h 30h 33h 30h 32h nh 0Dh	Set Blank		P/F
VXXG0303	56h Xh Xh 47h 30h 33h 30h 33h 0Dh	Auto Keystone On		Pn/F
VXXS0303n	56h Xh Xh 53h 30h 33h 30h 33h nh 0Dh	Auto Keystone On		P/F
VXXG0304	56h Xh Xh 47h 30h 33h 30h 34h 0Dh	Get Freeze On		Pn/F
VXXS0304n	56h Xh Xh 53h 30h 33h 30h 34h nh 0Dh	Set Freeze On		P/F

Command Group 03				
ASCII	**HEX**	**Function**	**Description**	**Return Value**
VXXG0305	56h Xh Xh 47h 30h 33h 30h 35h 0Dh	Get Volume	n=0~10	Pn/F
VXXS0305n	56h Xh Xh 53h 30h 33h 30h 35h nh 0Dh	Set Volume	n=0~10	P/F
VXXG0306	56h Xh Xh 47h 30h 33h 30h 36h 0Dh	Treble	n=0~16	Pn/F
VXXS0306n	56h Xh Xh 53h 30h 33h 30h 36h nh 0Dh	Treble	n=0~16	P/F
VXXG0307	56h Xh Xh 47h 30h 33h 30h 37h 0Dh	Bass	n=0~16	Pn/F
VXXS0307n	56h Xh Xh 53h 30h 33h 30h 37h nh 0Dh	Bass	n=0~16	P/F
VXXG0308	56h Xh Xh 47h 30h 33h 30h 38h 0Dh	Get Projection Mode	0:Front 1:Rear 2:Ceiling 3:Rear+Ceiling	Pn/F
VXXS0308n	56h Xh Xh 53h 30h 33h 30h 38h nh 0Dh	Set Projection Mode	0:Front 1:Rear 2:Ceiling 3:Rear+Ceiling	P/F
VXXG0309	56h Xh Xh 47h 30h 33h 30h 39h 0Dh	Get vertical keystone value	n=-40~+40	Pn/F
VXXS0309n	56h Xh Xh 53h 30h 33h 30h 39h nh 0Dh	Set vertical keystone value	n=-40~+40	P/F
VXXG0310	56h Xh Xh 47h 30h 33h 31h 30h 0Dh	Get horizontal keystone value	n=-20~+20	Pn/F
VXXS0310n	56h Xh Xh 53h 30h 33h 31h 30h nh 0Dh	Set horizontal keystone value	n=-20~+20	P/F
VXXG0311	56h Xh Xh 47h 30h 33h 31h 31h 0Dh	Get zoom	n=-10~+10	Pn/F
VXXS0311n	56h Xh Xh 53h 30h 33h 31h 31h nh 0Dh	Set zoom	n=-10~+10	P/F
VXXG0312	56h Xh Xh 47h 30h 33h 31h 32h 0Dh	Get focus	n=-20~+20	Pn/F
VXXS0312n	56h Xh Xh 53h 30h 33h 31h 32h nh 0Dh	Set focus	n=-20~+20	P/F
VXXG0313	56h Xh Xh 47h 30h 33h 31h 33h 0Dh	Get vertical lens shift	n=-20~+20	Pn/F
VXXS0313n	56h Xh Xh 53h 30h 33h 31h 33h nh 0Dh	Set vertical lens shift	n=-20~+20	P/F
VXXG0314	56h Xh Xh 47h 30h 33h 31h 34h 0Dh	Get horizontal lens shift	n=-20~+20	Pn/F
VXXS0314n	56h Xh Xh 53h 30h 33h 31h 34h nh 0Dh	Set horizontal lens shift	n=-20~+20	P/F
VXXG0315	56h Xh Xh 47h 30h 33h 31h 35h 0Dh	Get 3D Mode	n=0~2	Pn/F
VXXS0315n	56h Xh Xh 53h 30h 33h 31h 35h nh 0Dh	Set 3D Mode	0:Off 1:DLP 2: IR	P/F
VXXG0316	56h Xh Xh 47h 30h 33h 31h 36h 0Dh	Get 3D sync inverter	n=0~1	Pn/F
VXXS0316n	56h Xh Xh 53h 30h 33h 31h 36h nh 0Dh	Set 3D sync inverter	0:Off 1:On	P/F
VXXG0317	56h Xh Xh 53h 30h 33h 31h 37h 0Dh	Get 3D format	n=0~3	Pn/F
VXXS0317n	56h Xh Xh 47h 30h 33h 31h 37h nh 0Dh	Set 3D format	0:FS 1:TB 2:SBS 3:FP	P/F

Command Group 03				
ASCII	**HEX**	**Function**	**Description**	**Return Value**
VXXG0319	56h Xh Xh 47h 30h 33h 31h 39h 0Dh	Get Lamp mode	n=0~2	Pn/F
VXXS0319n	56h Xh Xh 53h 30h 33h 31h 39h nh 0Dh	Set Lamp mode	0:Eco 1:Normal 2:Dynamic ECO 3: Dynamic ECO Plus	P/F
VXXG0322	56h Xh Xh 47h 30h 33h 32h 32h 0Dh	Get Fan Speed	n=0~1	Pn/F
VXXS0322n	56h Xh Xh 53h 30h 33h 32h 32h nh 0Dh	Set Fan Speed	0:Normal 1:High Speed	P/F
VXXG0331	56h Xh Xh 47h 30h 33h 33h 31h 0Dh	Get the R gain	n=0~200	Pn/F
VXXS0331n	56h Xh Xh 53h 30h 33h 33h 31h nh 0Dh	Set the R gain	n=0~200	P/F
VXXG0332	56h Xh Xh 47h 30h 33h 33h 32h 0Dh	Get the G gain	n=0~200	Pn/F
VXXS0332n	56h Xh Xh 53h 30h 33h 33h 32h nh 0Dh	Set the G gain	n=0~200	P/F
VXXG0333	56h Xh Xh 47h 30h 33h 33h 33h 0Dh	Get the B gain	n=0~200	Pn/F
VXXS0333n	56h Xh Xh 53h 30h 33h 33h 33h nh 0Dh	Set the B gain	n=0~200	P/F
VXXG0334	56h Xh Xh 53h 30h 33h 31h 37h 0Dh	Get the R offset	n=-100~100	Pn/F
VXXS0334n	56h Xh Xh 47h 30h 33h 31h 37h nh 0Dh	Set the R offset	n=-100~100	P/F
VXXG0335	56h Xh Xh 47h 30h 33h 31h 39h 0Dh	Get the G offset	n=-100~100	Pn/F
VXXS0335n	56h Xh Xh 53h 30h 33h 31h 39h nh 0Dh	Set the G offset	n=-100~100	P/F
VXXG0336	56h Xh Xh 47h 30h 33h 32h 32h 0Dh	Get the B offset	n=-100~100	Pn/F
VXXS0336n	56h Xh Xh 53h 30h 33h 32h 32h nh 0Dh	Set the B offset	n=-100~100	P/F
VXXG0337	56h Xh Xh 47h 30h 33h 33h 37h 0Dh	Get the white R gain	n=0~100	Pn/F
VXXS0337n	56h Xh Xh 53h 30h 33h 33h 37h nh 0Dh	Set the white R gain	n=0~100	P/F
VXXG0338	56h Xh Xh 47h 30h 33h 33h 38h 0Dh	Get the white G gain	n=0~200	Pn/F
VXXS0338n	56h Xh Xh 53h 30h 33h 33h 38h nh 0Dh	Set the white G gain	n=0~200	P/F
VXXG0339	56h Xh Xh 47h 30h 33h 33h 39h 0Dh	Get the white B gain	n=0~200	Pn/F
VXXS0339n	56h Xh Xh 53h 30h 33h 33h 39h nh 0Dh	Set the white B gain	n=0~200	P/F
VXXG0340	56h Xh Xh 53h 30h 33h 34h 30h 0Dh	Get the Red Hue	n=-100~100	Pn/F
VXXS0340n	56h Xh Xh 47h 30h 33h 34h 30h nh 0Dh	Set the Red Hue	n=-100~100	P/F
VXXG0341	56h Xh Xh 47h 30h 33h 34h 31h 0Dh	Get the Red Saturation	n=-100~100	Pn/F
VXXS0341n	56h Xh Xh 53h 30h 33h 34h 31h nh 0Dh	Set the Red Saturation	n=-100~100	P/F
VXXG0342	56h Xh Xh 47h 30h 33h 34h 32h 0Dh	Get the Red Gain	n=-100~100	Pn/F
VXXS0342n	56h Xh Xh 53h 30h 33h 34h 32h nh 0Dh	Set the Red Gain	n=-100~100	P/F
VXXG0343	56h Xh Xh 53h 30h 33h 34h 33h 0Dh	Get the Green Hue	n=-100~100	Pn/F
VXXS0343n	56h Xh Xh 47h 30h 33h 34h 33h nh 0Dh	Set the Green Hue	n=-100~100	P/F
VXXG0344	56h Xh Xh 47h 30h 33h 34h 34h 0Dh	Get the Green Saturation	n= -100~100	Pn/F
VXXS0344n	56h Xh Xh 53h 30h 33h 34h 34h nh 0Dh	Set the Green Saturation	n= -100~100	P/F

Command Group 03				
ASCII	**HEX**	**Function**	**Description**	**Return Value**
VXXG0345	56h Xh Xh 47h 30h 33h 34h 35h 0Dh	Get the Green Gain	n= -100~100	Pn/F
VXXS0345n	56h Xh Xh 53h 30h 33h 34h 35h nh 0Dh	Set the Green Gain	n= -100~100	P/F
VXXG0346	56h Xh Xh 53h 30h 33h 34h 36h 0Dh	Get the Blue Hue	n= -100~100	Pn/F
VXXS0346n	56h Xh Xh 47h 30h 33h 34h 36h nh 0Dh	Set the Blue Hue	n= -100~100	P/F
VXXG0347	56h Xh Xh 47h 30h 33h 34h 37h 0Dh	Get the Blue Saturation	n= -100~100	Pn/F
VXXS0347n	56h Xh Xh 53h 30h 33h 34h 37h nh 0Dh	Set the Blue Saturation	n= -100~100	P/F
VXXG0348	56h Xh Xh 47h 30h 33h 34h 38h 0Dh	Get the Blue Gain	n= -100~100	Pn/F
VXXS0348n	56h Xh Xh 53h 30h 33h 34h 38h nh 0Dh	Set the Blue Gain	n= -100~100	P/F
VXXG0349	56h Xh Xh 53h 30h 33h 34h 39h 0Dh	Get the Cyan Hue	n= -100~100	Pn/F
VXXS0349n	56h Xh Xh 47h 30h 33h 34h 39h nh 0Dh	Set the Cyan Hue	n= -100~100	P/F
VXXG0350	56h Xh Xh 47h 30h 33h 35h 30h 0Dh	Get the Cyan Saturation	n=-100~100	Pn/F
VXXS0350n	56h Xh Xh 53h 30h 33h 35h 30h nh 0Dh	Set the Cyan Saturation	n=-100~100	P/F
VXXG0351	56h Xh Xh 47h 30h 33h 35h 31h 0Dh	Get the Cyan Gain	n=-100~100	Pn/F
VXXS0351n	56h Xh Xh 53h 30h 33h 35h 31h nh 0Dh	Set the Cyan Gain	n=-100~100	P/F
VXXG0352	56h Xh Xh 53h 30h 33h 35h 32h 0Dh	Get the Magenta Hue	n=-100~100	Pn/F
VXXS0352n	56h Xh Xh 47h 30h 33h 35h 32h nh 0Dh	Set the Magenta Hue	n=-100~100	P/F
VXXG0353	56h Xh Xh 47h 30h 33h 35h 33h 0Dh	Get the Magenta Saturation	n=-100~100	Pn/F
VXXS0353n	56h Xh Xh 53h 30h 33h 35h 33h nh 0Dh	Set the Magenta Saturation	n=-100~100	P/F
VXXG0354	56h Xh Xh 47h 30h 33h 35h 34h 0Dh	Get the Magenta Gain	n=-100~100	Pn/F
VXXS0354n	56h Xh Xh 53h 30h 33h 35h 34h nh 0Dh	Set the Magenta Gain	n=-100~100	P/F
VXXG0355	56h Xh Xh 53h 30h 33h 35h 35h 0Dh	Get the Yellow Hue	n=-100~100	Pn/F
VXXS0355n	56h Xh Xh 47h 30h 33h 35h 35h nh 0Dh	Set the Yellow Hue	n=-100~100	P/F
VXXG0356	56h Xh Xh 47h 30h 33h 35h 36h 0Dh	Get the Yellow Saturation	n=-100~100	Pn/F
VXXS0356n	56h Xh Xh 53h 30h 33h 35h 36h nh 0Dh	Set the Yellow Saturation	n=-100~100	P/F
VXXG0357	56h Xh Xh 47h 30h 33h 35h 37h 0Dh	Get the Yellow Gain	n=-100~100	Pn/F
VXXS0357n	56h Xh Xh 53h 30h 33h 35h 37h nh 0Dh	Set the Yellow Gain	n=-100~100	P/F
VXXG0358	56h Xh Xh 47h 30h 33h 35h 38h 0Dh	Get IR On/Off Status	n= 0~3	Pn/F
VXXS0358n	56h Xh Xh 53h 30h 33h 35h 38h nh 0Dh	Set IR On/Off Status	0:Both on 1:Front on 2:Back on 3:Both off	P/F