INSTRUCTION MANUAL

NT935 IR

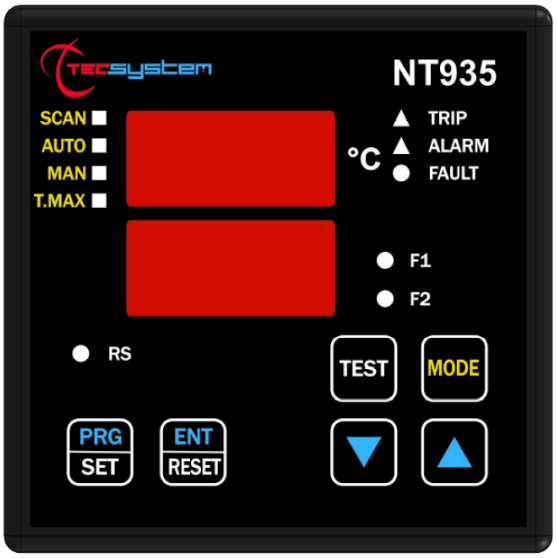

1MN0128 REV. 0

operates with ISO9001 certified quality system

TECSYSTEM S.r.l.
20094 Corsico (MI)
Tel.: +39-024581861
Fax: +39-0248600783

http://www.tecsystem.it

R. 1.1 27/03/17

ENGLISH

"Translations of the original instructions"

INTRODUCTION

First of all we wish to thank you for choosing a **TECSYSTEM** product. It is recommended to read this instruction manual carefully as to fully understand the use of the equipment and therefore to benefit of all its functions

ATTENTION! THIS MANUAL IS VALID AND COMPLETE FOR THE CONTROL UNITS NT935 IR BASIC AND NT935 IR AD.

CONTENTS

		PAGINA
1) SAFETY REQUIREMENTS	.....	4
2) ACCESSORIES	.....	5
3) TECHNICAL SPECIFICATIONS	.....	6
• TIR409	.....	—
• NT935 IR	.....	7
4) FRONT PANEL	.....	9
• DISPLAY	.....	10
• OPERATING PROGRAM CONTROL	.....	—
• NOTES ON SCAN AND MAN FUNCTIONS	.....	—
• LED TEST	.....	—
• ALARM RELAY TEST	.....	—
• ALARM RELAY SILENCING	.....	—
5) ASSEMBLY	.....	11
• TIR409	.....	—
• NT935 IR	.....	14
6) ELECTRICAL CONNECTIONS	.....	15
• NT935 IR BASIC BACK	.....	—
• NT935 IR AD BACK	.....	—
• POWER SUPPLY	.....	16
• ALARMS AND VENTILATION	.....	17
• FAULT AND RESET MESSAGE SEQUENCE	.....	—
• TIR409 SENSORS DIAGNOSTICS	.....	—
• PROGRAMMED DATA DIAGNOSTICS	.....	18
• TEMPERATURES DIAGNOSTICS	.....	—
• COOLING FANS CONTROL	.....	—
• FAN TEST	.....	—

PAGINA

7) PROGRAMMING 19

- NT935 IR BASIC/AD PROGRAMMING ..... —
- PROGRAMMING NOTES 21
- VOTING FUNCTION ..... —
- INTELLIFAN FUNCTION ..... —

8) RS485 MODBUS (only for NT935 IR AD) 22

- MODBUS MODULE INTRODUCTION ..... —
- OPERATING NOTES ..... —
- DATA TRANSMISSION ON MODBUS NETWORK ..... —
- RS485 ELECTRICAL CONNECTIONS ..... —
- DATA FRAME ..... —
- DATA PACKET ..... —
- FUNCTION CODE 23
- CODE 3(10). ..... —
- CODE 16(10). ..... —
- REMOTE PROGRAMMING NOTES ..... —
- ERROR CODES 24
- NOTA ACCEPTABLE DATA ..... —
- ILLEGAL DATA ..... —
- POLLING FREQUENCIES ..... —
- MODBUS MAPPING TABLE 25

9) FAIL SAFE FUNCTION 30

10) OUTPUT 4.20mA (only for NT935 IR AD) ..... —

11) FCD FUNCTION 31

12) WARRANTY CONDITIONS ..... —

13) TROUBLESHOOTING 32

14) EQUIPMENT DISPOSAL ..... —

15) USEFUL CONTACTS ..... —

SAFETY REQUIREMENTS



ATTENTION:

Carefully read the manual before starting using the control unit. Keep the instructions for future reference.



Do not open the device, touching any internal component can result in electric shock as voltages over 50 volts can be lethal. In order to reduce the risk of electric shock, do not disassemble the back of the device. Warranty shall be void if device is opened.

Before connecting the device to the power supply, ensure that all the connections are correct. Always disconnect the unit from the supply before making any modification on the wiring



Any operation on the equipment must be operated by a qualified technician.

Failure to comply with these instructions can cause damages, fires or electric shock, and possible serious injuries!

POWER SUPPLY
The NT935 IR control unit has UNIVERSAL power supply, i.e. it can be supplied from 24 to 240 Vac-Vdc, irrespectively of polarity in Vdc. Before use, ensure that the power cable is not damaged, knotted or pinched. Do not tamper with the power cable. Never disconnect the unit by pulling the cable, avoid touching the clamps. Do not carry out any connecting/disconnecting operation with wet hands. To disconnect the device, do not use objects such as levers. Immediately disconnect the device if you smell burning or see any smoke: contact technical service.

LIQUIDS
Do not expose the equipment to liquid spurts or drops, do not position it in places where humidity exceeds 90% and never touch it with wet or humid hands during storms. If any liquid penetrates the control unit, disconnect immediately and contact technical service.

CLEANING
Disconnect the power cable before cleaning the control unit, using a dry cloth without any solvent or detergent, and compressed air.

OBJECTS
Never insert objects into the openings of the control unit. If this happens, disconnect the control unit and contact technical service.

USE RESERVED TO QUALIFIED PERSONNEL
The purchased good is an advanced electronic device that should not be used by non-qualified personnel. Any operation must be carried out by a qualified technician.

ACCESSORIES
The use of non-original accessories or spare parts may damage the unit and endanger users' safety. In event of fault, contact technical service.

LOCATION
Install the control unit indoor, in a place protected from water splashes and sun rays. Do not place near heat sources if exceeding the parameters stated in this manual. Position on a stable surface, far from any possible vibrations. Position the unit as far as possible from intense magnetic fields.

REPAIRS
Do not open the control unit. In case of fault, always contact qualified personnel. The opening of the control unit and/or the removal of the series identifying label automatically make the warranty void. The warranty seal is applied to all devices, any attempt to open the unit would cause the seal to break the consequent automatic cancellation of the warranty.

FUNCTION
To control the transformer correctly from a temperature point of view, enabling the VOTING function is allowed where the load distributed between the phases of the transformer is adequately balanced.

TECHNICAL INFORMATION
Mail: ufficiotecnico@tecsystem.it — tel: 02/4581861

ACCESSORIES

The following items objects are present inside the box:

Control unit



Start guide and QR code

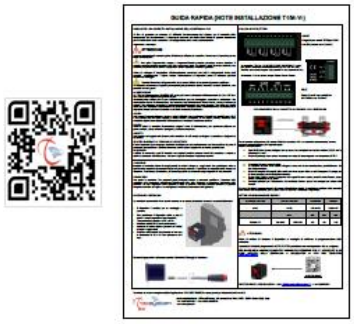

2 blocks for panel mounting

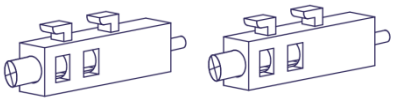

1 supply terminal 3 poles pitch 5
Code: 2PL0367 - Screws tightening torque 0.5Nm



1 relay terminal 12 poles pitch 5
Code: 2PL0361- Screws tightening torque 0.5Nm

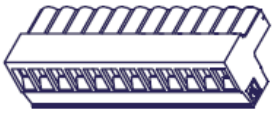

2 Pt100 sensor terminal 12 poles pitch 3.81
Code: 2PL0420 - Screws tightening torque 0.25Nm

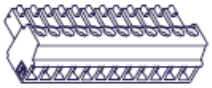

1 terminal 2 poles pitch 5 for 4.20mA output
Code: 2PL0364 or 2PL0363 (*)
Screws tightening torque 0.5Nm



1 RS485 terminal 3 poles pitch 3.81
Code: 2PL0366 (*)Screws tightening torque 0.25Nm



(*) Only for AD version

ATTENTION: always install the device using the terminals included in the pack.
The use of terminals other than those included with the control unit might cause malfunctions.

TECHNICAL SPECIFICATIONS	TIR409
POWER SUPPLY	
Maximum and minimum supply values	24Vcc (min. 18 - max. 36Vcc)
Maximum absorption	40mA
OUTPUT	
Output 4.20mA: 4mA @ -40°C, 20mA @ 200°C	•
4.20mA interface accuracy: ± 0.5% vfs ±1 digit	•
RS485 (future development)	•
DIMENSIONS	
69mm x 55mm x 33mm (terminal block excluded)	•
TESTS AND PERFORMANCES	
Construction in compliance with CE Standards	•
Protection from electrical interference CEI-EN-61000-4-4	•
IR sensor reading range: -40°C +200°C	•
IR sensor accuracy: refer to Pic.2 page 13	•
Measurement Angle 10° (FOV)	•
Operating temperature range: -20°C to + 85°C	•
Humidity 90% non-condensing condition.	•
Polycarbonate housing UL94 V0 120°C	•
Protection treatment of the electronic part	Optional

TECHNICAL SPECIFICATIONS	NT935 IR BASIC	NT935 IR AD
POWER SUPPLY		
Supply rated values	24-240 Vac-Vcc 50/60HZ	24-240 Vac-Vcc 50/60HZ
Minimum and maximum supply values	20-270 Vac-Vcc 50/60HZ	20-270 Vac-Vcc 50/60HZ
Vdc with reversible polarities	•	•
INPUTS		
4 inputs 4.20mA (-40°C @ 4mA, +200°C @ 20mA), section max 1,5mm²	•	•
Connections on removable terminal strips	•	•
Input channels protected against electromagnetic interference	•	•
OUTPUTS		
2 alarm relays (ALARM and TRIP) SPDT	•	•
1 sensor or operating failure (FAULT) relay SPDT	•	•
Output relays with 10A-250Vac-res COSΦ=1 contacts.	•	•
2 fan management relays SPST (FAN 1 and FAN 2)	•	•
Modbus RTU RS485 output	NO	•
Optically isolated 4.20mA output	NO	•
DIMENSIONS		
100x100 mm– din43700-depth .131mm (terminal block included)	Hole 92 x 92 mm	Hole 92 x 92 mm
TESTS AND PERFORMANCES		
Construction in compliance with CE regulations	•	•
Protection from electrical interference CEI-EN-61000-4-4	•	•
Dielectric strength: 1500Vac for 1 minute between output relays and 4.20mA inputs, relays and supply, supply and 4.20mA inputs	•	•
Reading range: -40°C @ 4mA, +200°C @ 20mA	•	•
4.20mA interface accuracy : ±0,5% vfs, ±1 digit	•	•
Ambient operating temperature from –20°C to +60°C	•	•
Humidity 90% non-condensing condition	•	•
Front Polycarbonate IP65	•	•

TECHNICAL SPECIFICATIONS	NT935 IR BASIC	NT935 IR AD
Housing NORYL 94 _V0	•	•
Max. consumption 7,5VA	•	•
Data memory 10 years minimum	•	•
Self diagnostic circuit	•	•
Protection treatment of the electronic part	Optional	Optional
DISPLAY AND DATA MANAGEMENT		
2x13mm and 3 digits display for temperatures , messages and channels	•	•
3 leds to display state of the alarm on the selected channel (ALARM-TRIP-FAULT)	•	•
4 leds selection of display mode (SCAN-AUTO-MAN-T-MAX)	•	•
2 leds to display the state of FAN1 and FAN2	•	•
Temperature alarm setting 0°C to 200°C	•	•
2 alarm thresholds for channels 1-2-3	•	•
2 alarm thresholds for channel 4	•	•
2 ON-OFF thresholds for FAN1 and FAN 2	•	•
IR sensor diagnostics (Fcc-Foc-Fcd)	•	•
Data memory diagnostics (Ech)	•	•
Access to programming through front keyboard	•	•
Automatic exit from relay programming, display and test after 1 minute's inactivity	•	•
Incorrect programming warning	•	•
Selection between channel automatic scanning, hottest channel or manual scanning	•	•
Storage of maximum temperatures reached by channels and alarm status	•	•
Front key to reset the alarms	•	•
Voting function	•	•
Intellifan function	•	•
Failsafe function	•	•

FRONT PANEL

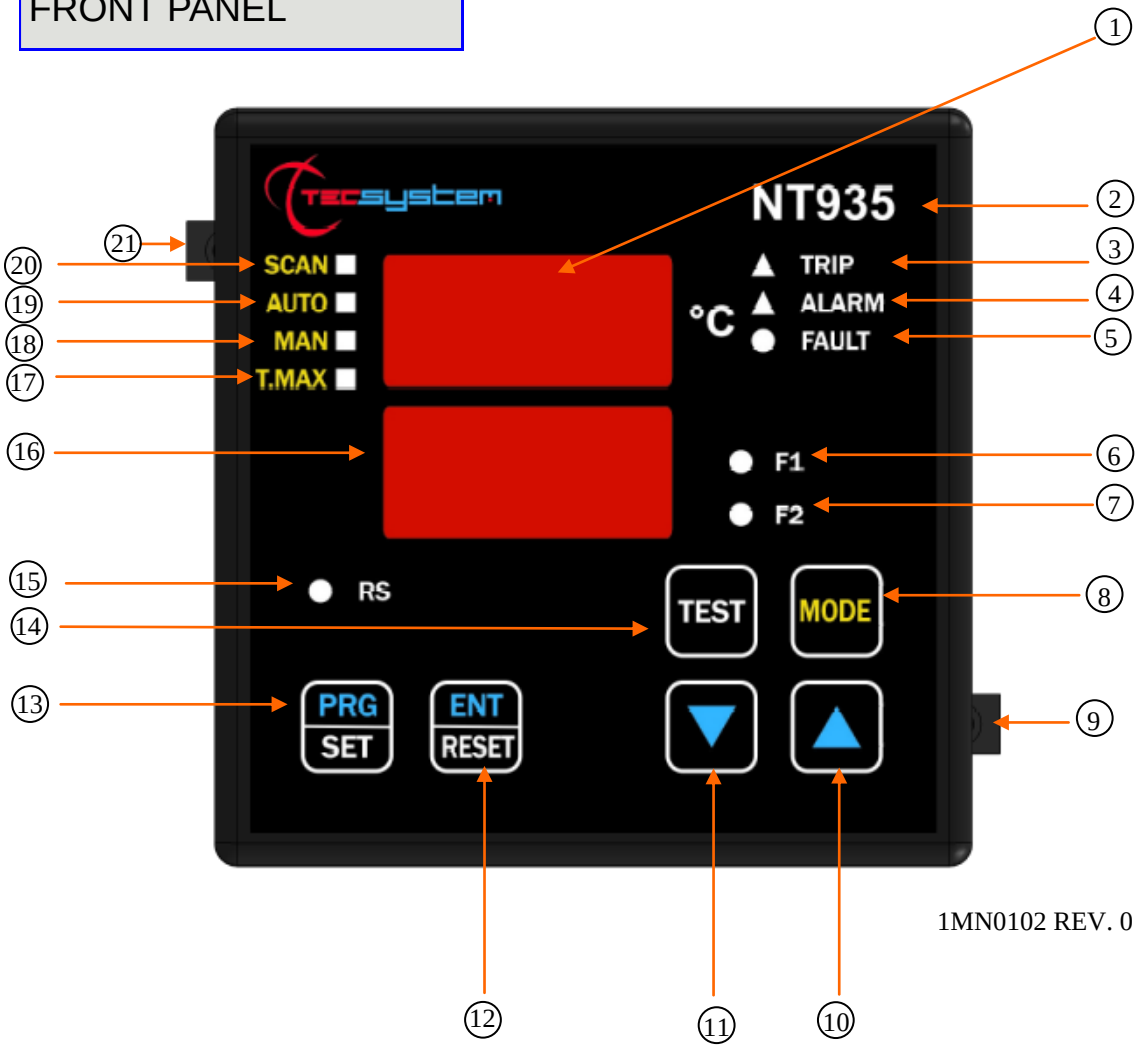

1MN0102 REV. 0

1)	3-digit temperature display	12)	Enter/Reset key
2)	Control unit series	13)	Programming/Setting key
3)	TRIP (red) LED	14)	Led/relays test key
4)	ALARM (yellow) LED	15)	Modbus RS communication (green) LED (only AD)
5)	FAULT (red) LED	16)	3-digit channel display
6)	FAN 1 (yellow) LED	17)	T-max mode selection (red) LED
7)	FAN 2 (yellow) LED	18)	Man mode selection (yellow) LED
8)	Display mode selection key	19)	Auto mode selection (green) LED
9)	Fixing block	20)	Scan mode selection (yellow) LED
10)	UP key	21)	Fixing block
11)	DOWN key		

DISPLAY

The first display is dedicated to temperatures.

The second display is dedicated to the monitored channel.

When switching the device ON or following a reset, the display shows: the NT935 IR control unit model (no options) or AD, VER "00" (firmware version) and the temperature range of the unit.

Pressing the MODE key, the display modes can be set:

- *SCAN*: the monitoring unit displays all the activated (°C) and deactivated (NO) channels scanning every 2 seconds.
- *AUTO*: the monitoring unit displays the hottest channel automatically.
- *MAN*: manual reading of the channel temperature using the up/down ▲▼keys.
- *T.MAX*: the monitoring unit displays the highest temperature reached by the sensors and any situation of alarm or fault occurred after the last reset. Select channels with the ▲▼ keys, reset values with RESET.

OPERATING PROGRAM CONTROL

To control the protection levels programmed, press the PRG key twice to access the **VIS** display mode. By repeatedly pressing the PRG key, you can scroll through all the previously set values in sequence.
After 1 minute of keyboard inactivity, the programming display procedure is automatically abandoned.

To stop the display, press the ENT key.

NOTES ON SCAN AND MAN FUNCTIONS

During the SCAN and MAN modes, the operation of the NT935 IR can be displayed.

1) RUN cPU:
This message appears when the unit operates regularly without any system error.
2) Ech Err:
This message appears when a damage in the EEPROM memory is detected.
Pressing Reset will cancel the message and restore the original default parameters, listed in the programming paragraph on pages 19-20. Return the control unit to TECSYSTEM for repair.
3) CAL Err:
This message appears when damage is found in the measurement circuit.
The temperature values displayed might be incorrect. Return the control unit to TECSYSTEM for repair.
4) Pt Err :
This message appears when it is detected that one or more TIR409 sensors are not working correctly, FOC, FCC and FCD indications in the TIR409 sensors diagnostics section on page 17. In case of **Err** the FAULT relay will be deactivated.

The above messages will be displayed following the 1-2-3-4 priority stated.

NOTE: regardless of the display mode, in case of a sensor fault (Fcc, Foc or Fcd), the control unit will automatically switch to **SCAN (PRIVILEGED SCAN)** mode, immediately allowing you to see the fault on the relative channel **CH**. (**Mode** key is disabled).

LED TEST

We suggest to carry out the control unit LED test regularly.
For this operation, press the TEST key briefly; all the displays turn on for 2 seconds.
If one of the LEDs does not work, please return the control unit to TECSYSTEM for repair.

ALARM RELAY TEST

This function allows to carry out a test of the relay operation without needing additional devices. To start the test procedure, keep the TEST key pressed for about 5 seconds: TST appears for 2 seconds, confirming you have entered the Relay Test mode.
The LED that is lit shows the relay to be tested; use the cursors ▲▼to select the required relay.
Press the SET and RESET keys to enable and disable the relay to be tested; the display will show ON-OFF.
After 1 minute's keyboard inactivity, the RELAY TEST procedure will be automatically abandoned.
To stop the RELAY TEST procedure, press the TEST key.

ALARM RELAY SILENCING

If you need to silence the ALARM signal, press the RESET key: the relay is disabled and the ALARM LED, which was fixed, will start blinking. Silencing is automatically disabled when the temperature goes below the ALARM threshold.

TIR409 SENSOR MOUNTING

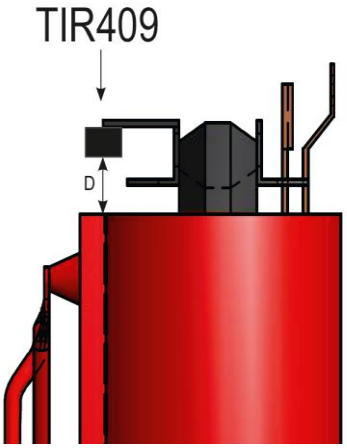

The TIR409 sensor can be fixed on the transformer upper crossbar with a plate support bracket.

In order to mount the sensor, please consider the following indications:

MINIMUM SAFETY DISTANCES.

The minimum safety distance (D) depends on the operating voltage of the equipment to be monitored.

Check the transformer manufacturer's technical specifications mounting installing the TIR409 sensor

OPERATING TEMPERATURE

The highest operating temperature for the electronics inside the IR sensor is 85°C.

Therefore, this value cannot be exceeded.

It is recemmended to keep teh sensor away from the hot air flux flowing through the LV transformer coil.

MEASURING POINT

The diameter of the measuring point is calculated with the following formula: Ø(cm)= D(cm) x 0.175. “D” represents the distance between the IR sensor and the surface to be monitored, see pictures page 13.

For example, at a distance “D” of 10cm the diameter is:

Ø= 10 x 0.175= 1.75 cm

A laser pointer can be activated by pressing the side key. It shows a translation of 10mm in comparison with the sensor measuring point center.

POWER SUPPLY OF THE TIR409 IR SENSORS

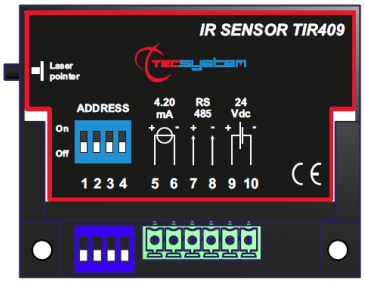

The TIR409 sensors can be supplied at a voltage ranging between 18 and 36 Vcc.

For a correct supply the **TECSYSTEM AU24** device is recommended.

The supply must be connected respecting the + and - polarities (pin 9 and 10).

A supply at 24Vdc is recommended.

CONNECTION OF TIR409 SENSORS WITH THE NT935 IR MONITORING UNIT

The 4.20 mA output of each TIR409 sensor must be connected to the 4.20 mA input of the relevant NT935 IR control unit input channel.

As to the sensor wiring, just comply with the following installation instructions:

1. Always use a 4-wire screened cable with AWG20 or AWG22 section.
2. All the wires conductors must be twisted and screened.
3. The cable must be connected considering the +/ - polarities
4. The cable screening must be connected to ground only on one side
5. The cable must not be placed near the LV / MV -HV power cables.
6. The cable must be laid straight, without any ring winding or binding.
7. Any tip used to channel the sensor wires must be properly crimped to avoid false contacts

If the instructions are not duly respected, temperature reading anomalies may occur, and in this case TECSYSTEM cannot be held responsible for any reason.

SENSOR DIMENSIONS

IR SENSOR **LASER POINTER**

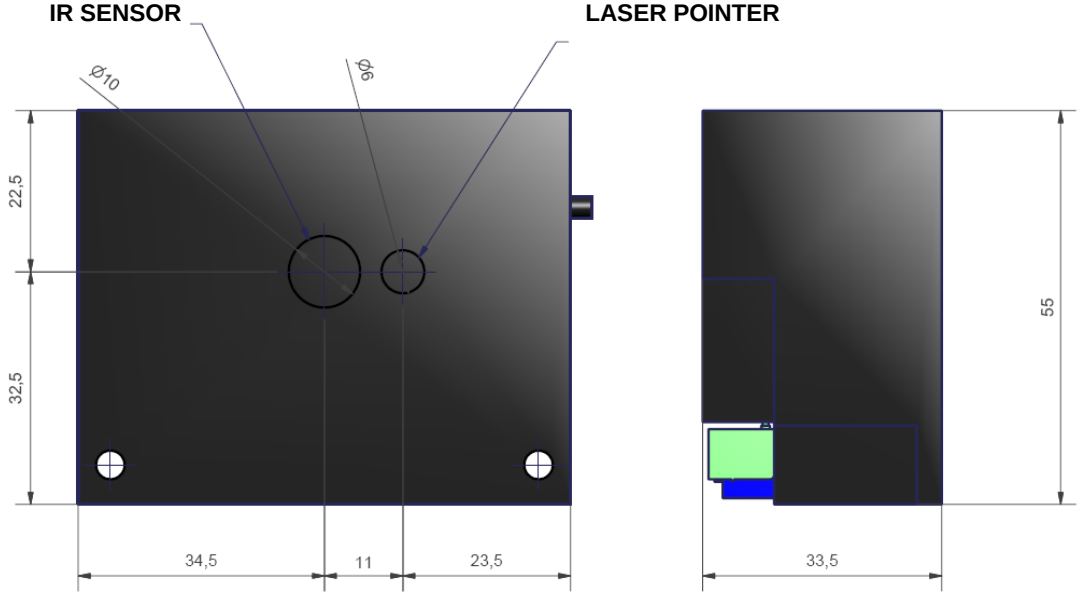

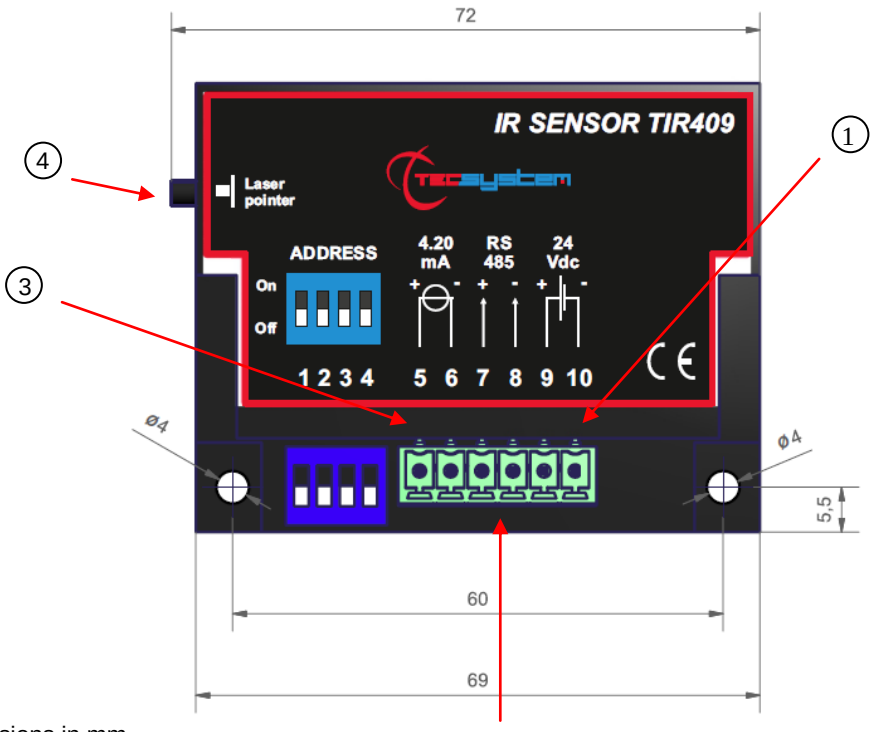

Dimensions in mm
Tolerance ±0,5mm

1MN0106 REV. 0

1)	TIR409 supply - 18-36 Vdc	3)	4.20mA Output
2)	RS485 Modbus output (not used)	4)	Laser pointer button

SENSOR MEASUREMENT CONE

LASER POINTER

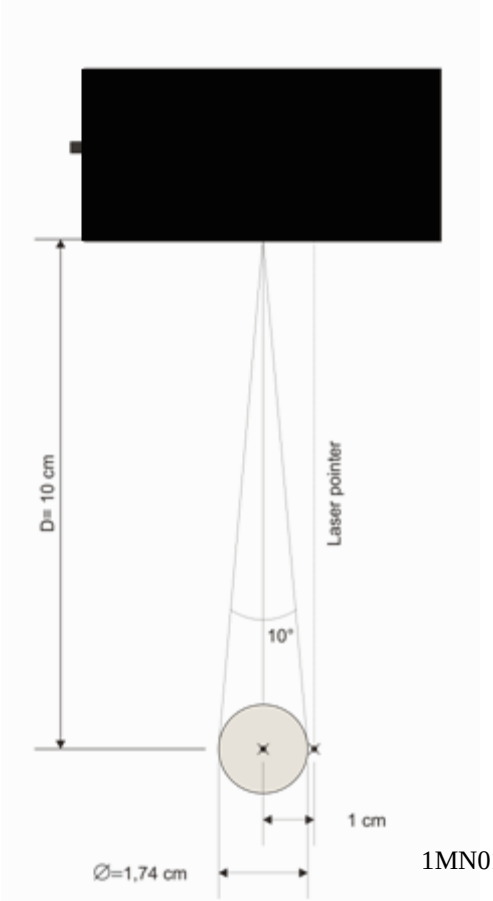

1MN0106 REV. 0

INFRARED SENSITIVE ELEMENT ACCURACY TABLE

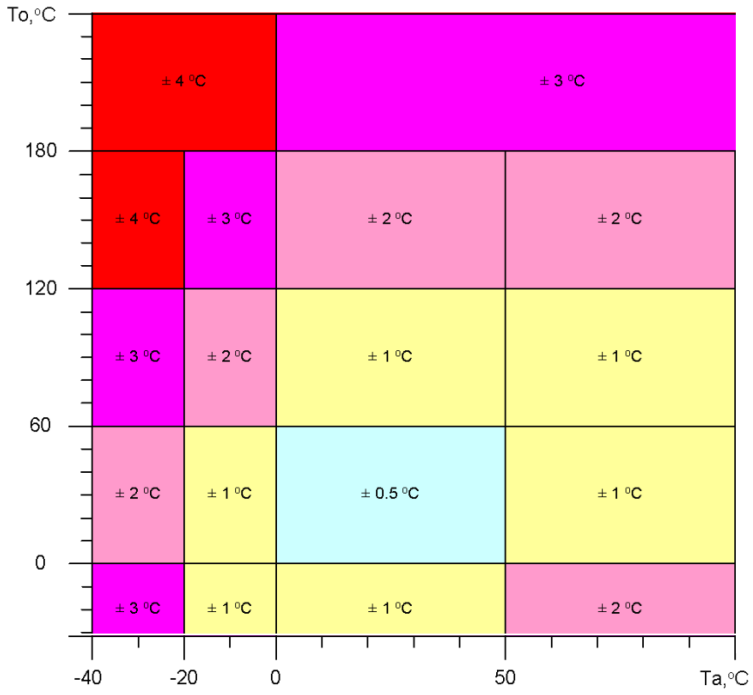

Ta: Ambient temperature
To: Temperature of the item to be monitored

1MN0106 REV. 0

MOUNTING

Drill a 92 x 92 mm hole in the panel sheet.

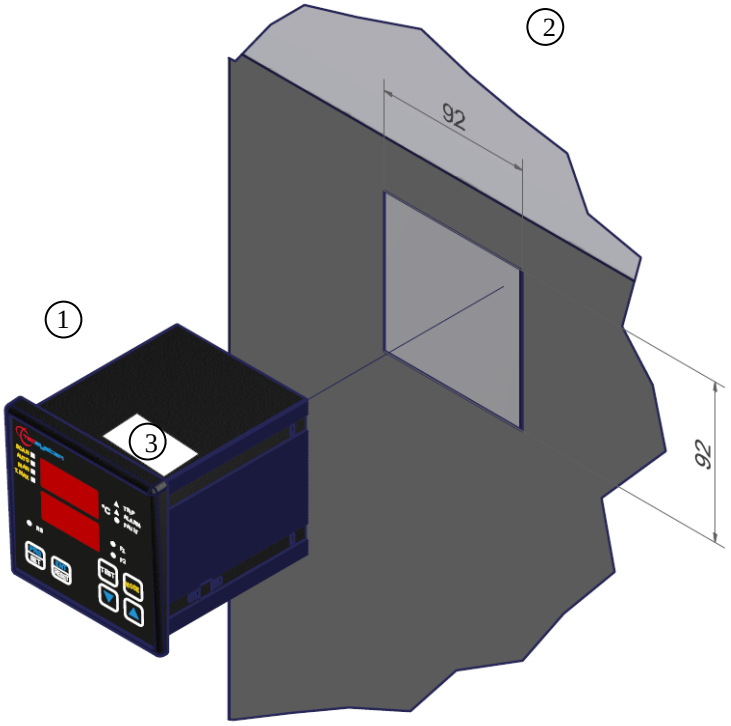

1MN0007 REV. 0

1)	Control Unit	2)	Hole dimensions (tolerance +0.8 mm)
3)	Identification label		

Fix the unit securely with the blocks supplied.

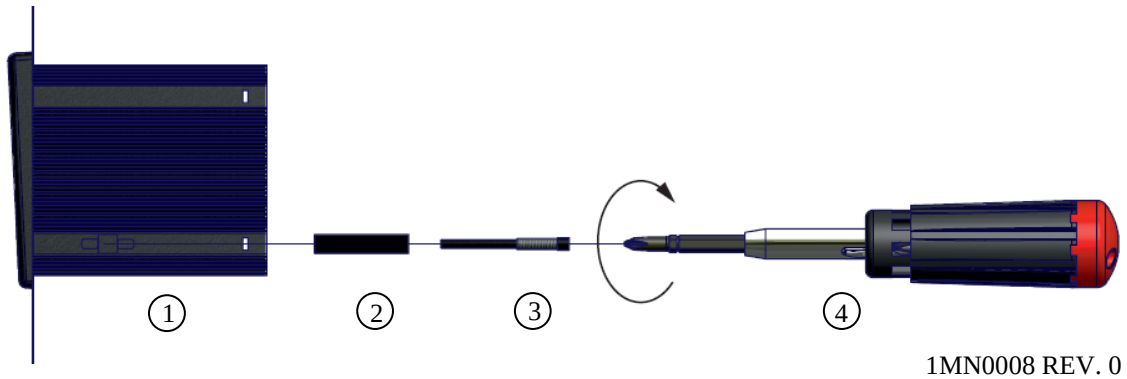

1MN0008 REV. 0

1)	Control Unit	3)	Fixing screw
2)	Fixing blocks	4)	Crosshead screwdriver #1X100mm

ELECTRICAL CONNECTION

NT935 IR BASIC

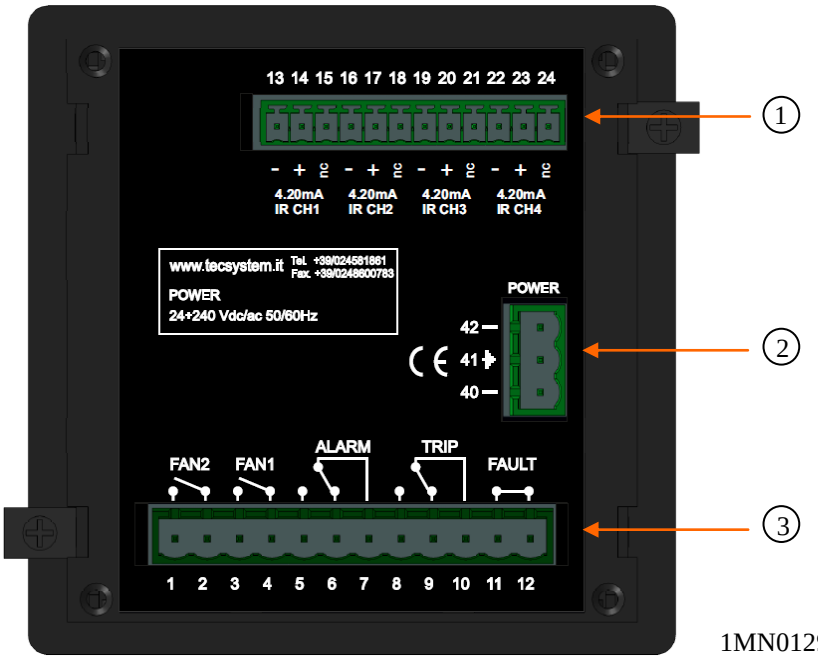

1MN0129 REV. 0

1)	TIR409 Sensors Input (4.20mA +/-) nc: not connected	3)	Relays (FAN2-FAN1-ALARM-TRIP-FAULT)
2)	24-240Vac-dc 50/60Hz power supply		

NT935 IR AD

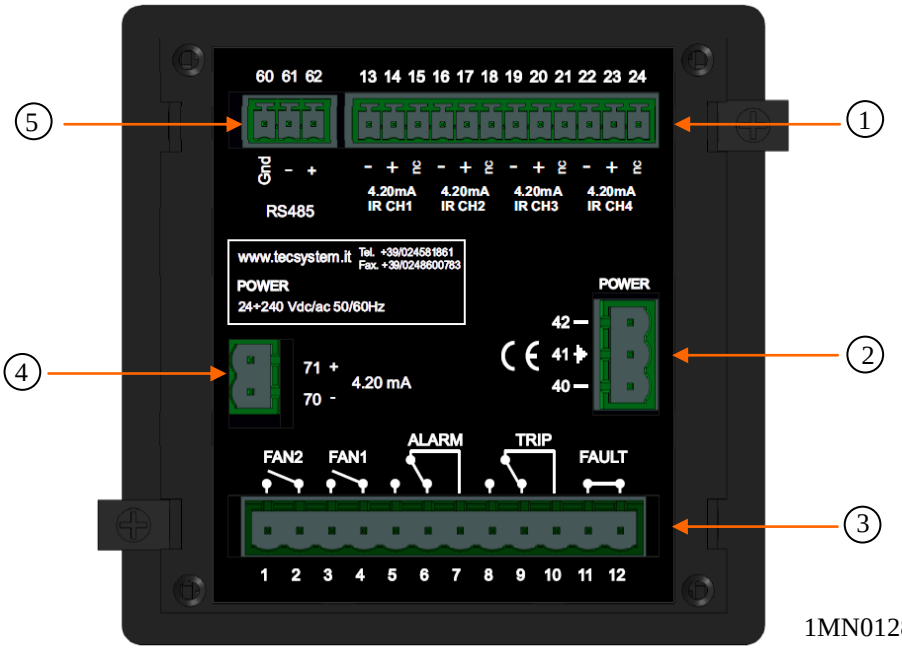

1MN0128 REV. 0

1)	TIR409 Sensors Input (4.20mA +/-) nc: not connected	3)	4.20mA output
2)	24-240Vac-dc 50/60Hz power supply	4)	RS485 Modbus Inside RTU Output.
3)	Relays (FAN2-FAN1-ALARM-TRIP-FAULT)		

RELAY CONNECTION EXAMPLE

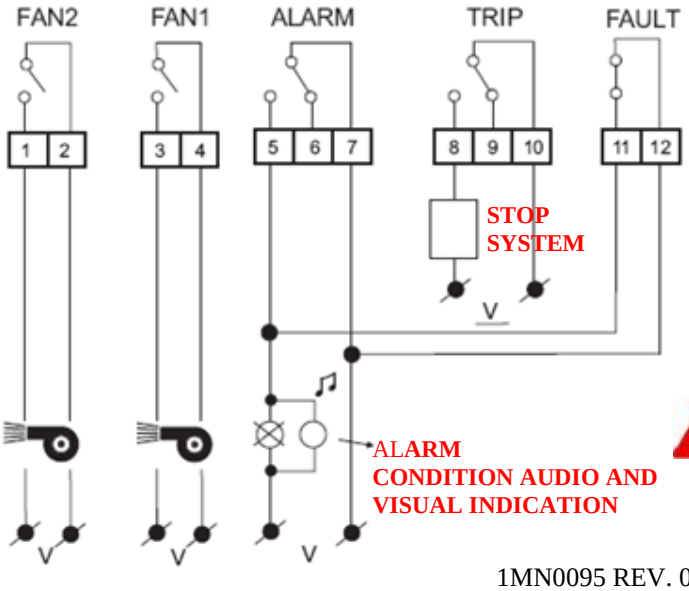

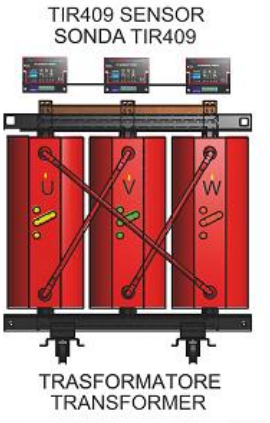

Remark: before connecting the sensors to the control unit, read carefully the section "CONNECTION OF TIR409 SENSORS WITH THE NT935 IR MONITORING UNIT" page 11.

1MN0095 REV. 0

Output relay with 10A-250Vac-res COSΦ=1 contacts.

Note: relay contact image in non-alarm condition, with the exception of the FAULT relay that opens: contacts 11-12 open (NO) contacts 11-12 closed (NC) fault condition identification. Read the Alarms and Ventilation paragraph on page 17, and see the opening of the fault contact image.

ATTENTION: Before carrying out any electrical test on the transformer (i.e. dielectric strength, etc.), it is recommended to disconnect both sensors and control unit. Any interference or voltage surges on the 4.20mA inputs/outputs or on the supply might cause the sensors or control unit to fail.

POWER SUPPLY

The NT935 IR control unit has UNIVERSAL power supply, i.e. it can be supplied by 24 to 240 Vac-Vdc, 50/60Hz irrespectively of polarity in Vdc (terminals 40-42).

This is obtained thanks to the use of a tested power supply unit, newly designed and manufactured, that frees installers from worrying about the correct Vac and Vdc supply.

The ground must always be connected to terminal 41.

When the unit is supplied directly by the secondary of the transformer to protect, it can be burnt out by strong overvoltages.

This happens if the main switch is closed and the transformer has no load (blank test).
The above-mentioned problems are much more evident when the 220 Vac voltage is taken directly from the transforme secondary bars and there is a fixed capacitor battery to phase the transformer itself.

To protect the control unit from line overvoltages, we suggest using the PT-73- 220 electronic discharger, designed by TECSYSTEM S.r.l. for this specific purpose. As an alternative we suggest using 110 Vac or, even better, 110 Vdc supply voltages.

If an existing control unit must be replaced with a new one, to guarantee its correct and safe operation, the sensor/relay/supply connecting terminals must be replaced with the new terminals supplied.

ALARMS AND VENTILATION

Carry out the electrical connections on the removable terminal blocks only after disconnecting them from the unit.
When the control unit is in one of the modes mentioned below, it does not monitor the temperature and the relays are all inhibited, the FAULT led start blinking.

- Vis. programming display
- PRG Programming
- Relay test

The ALARM and TRIP relays switch only when the pre-set temperature thresholds have been exceeded.

The FAULT contact, programmed in failsafe mode (default YES), opens (11-12) when the equipment is switched on and only if the unit detects no fault. It holds this condition until one of the following events occurs:

- Data memory fault (Ech message).
- TIR409 sensor fault (FCC minimum full scale value exceeded (or disconnected sensor), FOC maximum full scale value exceeded – FCD quick temperature increase)
- CAL damage to the measurement circuit.
- Insufficient supply voltage.
- During the power on reset mode after programming (PRG) and during the displaying data mode (VIS) and test relay.

The FAULT failsafe can be disabled selecting FAULT failsafe "NO" see step 34-35 programming page 20.

NOTE: do not connect the FAULT relay to the transformer tripping circuit to avoid unwanted system interruptions.

FAULT CONTACT OPERATION (failsafe enabled)

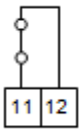

FAULT 11-12 NC: ALARM FAULT OR POWER OFF

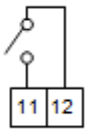

FAULT 11-12 NO: POWER ON OR NO FAULT

NOTE: do not connect the FAULT relay to the transformer tripping circuit to avoid unwanted system interruptions.

The FAN1 and FAN2 contacts can be used to control the cooling fans, or they can be inserted in the conditioning system of the transformer room, see section Fan control on page 18.

NOTE: always disconnect the unit before performing any electrical connections.

FAULT AND RESET MESSAGE SEQUENCE

Here below the sequence of the fault messages and the RESET function condition.

1) ECH	eeprom fault	erasable message
2) CAL	measurement circuit fault	erasable message
3) FCD	quick temp. increase fault	resettable condition
4) ERR PT	FCC or FOC sensor fault	non-resettable and fixed condition

TIR409 SENSOR DIAGNOSTICS

In case of failure or when the maximum/minimum full scale value of one of the TIR409 sensors installed on the machine to be monitored is exceeded, the FAULT relay switches immediately and the relative FAULT warning is displayed on the relevant channel.

Display message **FCC** I<4mA or full scale minimum value exceeded or disconnected sensor
Display message **FOC** I>20mA or full scale maximum value exceeded.

In order to cancel the message and to restore the FAULT switch it is necessary to check the TIR409 sensor connections and, in case, replace the faulty sensor. In case the minimum/maximum full scale value has been exceeded, it must be sure that the ambient conditions are the same as indicated in the unit.

Note: The minimum/maximum full scale value may be determined by interferences on the sensor lines. In this case it is recommended to check the correct installation of the sensors and CONNECTION OF TIR409 SENSORS WITH THE NT935 IR MONITORING UNIT (page 11)

Before connecting the sensor and the 4.20mA inputs please verify the + and – polarities and the supply voltage.

NOTE: *the use of cables not complying with the above might cause reading anomalies. It is always important to take into account that any interference on the signal lines might cause anomalies on the TIR409 inputs (CH1-CH2-CH3-CH4) or on the sensors themselves.*

PROGRAMMED DATA DIAGNOSTICS

In case of failure of the internal memory or corruption of programmed data just after unit switching on, **Ech** is displayed with the relevant Fault contact.

In this case, for safety reasons, the default parameters are set automatically (see "Programming table" on pages 19-20). Eliminate **Ech** by pressing RESET and run programming to enter the required values.

Finally switch the unit off and back on to check if the memory works correctly. If it is damaged, **Ech** message will be displayed again (send the control unit to TECSYSTEM S.r.l. for repair).

TEMPERATURE DIAGNOSTICS

When one of the temperature sensors senses a temperature 1°C higher than the alarm threshold, 5 seconds later the **ALARM** relay switches and the *ALARM* LED of the affected channel (CH*n*) lights up.

When the trip temperature limit is exceeded, the **TRIP** relay switches and the *TRIP* LED of the affected channel (CH*n*) lights up.

As soon as the recorded temperature returns to values equal to or lower than the limit set for the **ALARM** and **TRIP** relays switching, these relays de-energise and the corresponding LEDs switch off.

The **ALARM** and **TRIP** values are kept in the internal memory: they can be recalled by entering the Vis modes (programmed parameter display) and modified in PRG (programming) mode.

COOLING FAN CONTROL

The NT935 IR is fitted with two FAN controls (FAN1 and FAN2) and, if programmed correctly, can control the fans switching ON and OFF to cool the transformer.

The FAN1 and FAN2 contacts can manage cooling the transformer and the room where it is installed.

By connecting FAN1 to the tangential cooling system (the two bars on the transformer) and FAN2 to the extractor, you will improve the air flow in the cabin; moreover, the cabin temperature will no longer need to be managed by a thermostat outside the system.

The fans can be controlled in two different ways:

- Using the temperatures sensed by the sensors on the three columns (FAN1)

  CHF 1.2.3
  (ex. ON at 70°C - OFF at 60°C)

- Via an extra sensor (**CH4/YES**) dedicated to the ambient temperature inside the transformer room (FAN2).

  CHF 4
  (ex. ON at 45°C - OFF at 35°C)

The ON and OFF values are programmable according to the device range. , FAN ON must always be greater by at least 1° C since FAN OFF (recommended Δ FAN (POWER ON-OFF) + 10 ° C.
The FAN 1 / FAN 2 LED lights up when the temperature exceeds the FAN ON threshold, the corresponding relay switches, and turns off when the temperature goes below the FAN OFF threshold, the corresponding relay switches.

FAN TEST

By programming (**HFn**), it is possible to have the fans operating 5 minutes every "*xxx*" hours, regardless of the columns or ambient temperature values (i.e.: with HFn=001 the fans are activated for 5 minutes every hour).
This function aim is to verify the fan operation and to check equipment status periodically.

By setting **NO** this function is inhibited.

To enable the Hfn function, read the "Programming" section on pages 19-20.

PROGRAMMING

NT935 IR BASIC/AD

STEP	PRESS	EFFECT	PRESS	NOTES
1	PRG SET	Hold the PRG key until PRG SET is shown on the display		PRG
2		Select PRG SET for entering in the programming mode or PRG 1 to restore the default programmed value.	▼ ▲	PRG 1 default value
3	PRG SET	The ALARM threshold for (CH 1-2-3) is displayed. Set the required value. ALARM LED flashes	▼ ▲	Default 90°C
4	PRG SET	The TRIP threshold for (CH 1-2-3) is displayed TRIP LED flashes		
5		Set the required value	▼ ▲	Default 119°C
6	PRG SET	FAN1 (CH 1-2-3) is displayed. FAN1 LED flashes		Default YES
7		SELECT YES/NO /INT	▼ ▲	If INT is selected, read “functions note” pag.21
8	PRG SET	(CH4) is displayed. Enabling CH4		
9		Select YES or NO	▼ ▲	if YES is selected, CH4 is enabled. If no, CH4 is disabled
10	PRG SET	The ALARM threshold for (CH4) is displayed. Set the required value. ALARM LED flashes		Se CH4=NO salta al passo 16, Default NO
11		Set the required value	▼ ▲	Default 120°C
12	PRG SET	The TRIP threshold for (CH4) is displayed TRIP LED flashes		
13		Set the required value	▼ ▲	Default 140°C
14	PRG SET	FAN2 (CH4) is displayed. FAN2 LED flashes		Default Yes
15		Select YES/NO	▼ ▲	
16	PRG SET	ON (CH 1-2-3) is displayed. FAN1 blinks		Default 70°C
17		Set the required FAN1 ON threshold	▼ ▲	If FAN 1 NO is selected, skip to step 21. If INT is selected, FAN1 and FAN2 Leds blink
18	PRG SET	OFF (CH 1-2-3) is displayed. FAN1 blinks		Default 60°C
19		Set the required FAN1 OFF threshold	▼ ▲	

20	PRG SET	ON (CH4) is displayed. FAN2 blinks		Default 45°C
21		Set the required FAN2 ON threshold	▼ ▲	If FAN 2 NO is selected, skip to step 24
22	PRG SET	OFF (CH4) is displayed. FAN2 blinks		Default 35°C
23		Set the required FAN2 OFF threshold	▼ ▲	
24	PRG SET	HFN (NO) is displayed FAN1-FAN2 leds blink		Fans test for 5 min. every “n” hours
25		Set the number of hours required	▼ ▲	Default NO = function disabled
26	PRG SET	FCD (NO) is displayed		Fault for quick temperature increase (°C/sec)
27		Set the required value (info FCD page 31)	▼ ▲	Default NO (function disabled)
28	PRG SET	VOT (NO) is displayed (info Voting page 21)		
29		Select YES/NO	▼ ▲	Default NO (function disabled)
30	PRG SET	The display shows FLS (ALARM) flashing LED ALARM (info FAIL SAFE on page 30)		
31		Set YES or NO	▼ ▲	Default NO
32	PRG SET	The display shows FLS (TRIP) LED flashes TRIP		
33		Set YES or NO	▼ ▲	Default NO
34	PRG SET	The display shows FLS (FAULT) LED flashes FAULT		
35		Set YES or NO	▼ ▲	Default YES
		For version NT935 IR (BAS) skip to step 44		
36	PRG SET	Sul display appare ADR <> “dato”		Modbus Address Default 001
37		Select the address	▼ ▲	From 1 to 255
38	PRG SET	BDR <> “datum” is displayed		Modbus transfer speed Default 19.2 Kb/s
39		Select the required speed	▼ ▲	From 2.4 Kb/s to 38.4 Kb/s
40	PRG SET	PAR <> “datum” is displayed		Select parity bit. Default EVE
41		Select the required parity bit	▼ ▲	None (N-1 or N-2), Even (EVE), Odd (ODD) See Data frame at page 22.
42	PRG SET	420 <> “datum” is displayed		4.20 mA output programming
43		Select the required 4.20 mA output	▼ ▲	1-2-3-4; fixed channel SCA: scan HOT: hottest channel Default HOT
44	PRG SET	END is displayed		End of programming
45	ENT RESET	Press ENT to save the data and exit from programming		Err: incorrect programming of the LED values (note 6)
46	PRG SET	Return to step1		See “Programming Notes” on page 21

ATTENTION :

It is recommended to check the unit programming before starting using the device.

The default parameters set by TECSYSTEM might not match your requirements.

The programming of the device is under end user's responsibility. The alarm thresholds setting and the enabling of the functions described in this manual must be verified by a qualified technician keeping into consideration the application and features of the plant where the control unit is installed.

PROGRAMMING NOTES

1) The MODE key allows going backwards in the programming steps according to the sequence 28-26-8-1.
2) The TEST key allows exiting programming mode without saving the modified data.
3) After 1 minute of inactivity the programming mode is abandoned without saving the data.
4) During programming, the control unit does not control/protect the monitored machine.
5) At the end of programming ,the control unit is restarted and the FAULT relay is disabled until the unit is fully restarted.
6) If pressing ENT, the message "Err" is displayed, one of the following mistakes has been made:

ERR ALL. = ALARM ≥ TRIP
ERR FAN = FAN-OFF ≥ FAN-ON. (FAN1 O FAN2)
ERR INT = INT FAN-OFF ≥ FAN-ON (FAN1) DELTA <10°C

The device automatically switches to the programming step of the mistake.

REMARK: EVERY TIME THE CONTROL UNIT IS PROGRAMMED AND ENDED WITH DATA SAVING, THE VALUES SAVED IN T-MAX ARE RESET.

VOTING FUNCTION

The voting function is coming from the concept of redundancy which consists in the duplication of the components of a system with the aim of increasing its **reliability**.

How **VOTING** works?

As per the concept previously indicated, the sensors are installed to monitor the operation of the electrical machine, but at the same time, to ensure the proper operation of the probes themselves, avoiding false alarm warnings (generated by installation errors or failures).

VOTING can be enabled by selecting **VOTING "YES"** when programming**.** The control unit compares the temperature values measured on the CH1-CH2-CH3 channels and enables the switching of the tripping contact **(TRIP)** only if the TRIP threshold on at least two channels in the same period T has been exceeded.

If **VOTING "NO**" is selected, the function will be disabled.

Remark: In any case, the switching of the **ALARM** threshold will cause the ALARM warning to be displayed on the relevant channel.

To enable Voting, read the "programming" section on pages 19-20.

Attention: To control the transformer correctly from a temperature point of view, the enabling of the VOTING function is recommended only where the load distributed between the phases of the transformer is adequately balanced. In addition, when voting is enabled, FAULT conditions of FCC-FCC-FCD on two or more channels can determine the inhibition of the TRIP contact.

INTELLIFAN FUNCTION

What it is for:

Intellifan function allows to reduce the thermal shock on the transformer by anticipating (one bar at the time) the activation of the cooling system.

The decrease of the thermal shock allows to improve lifespan of the transformer and of the ventilation system itself.

Enabling **FAN1 "INT",** the control unit will alternate the activation (every 30 minutes) of the FAN1-FAN2 contacts, anticipating the cooling system activation at the temperature average value between FAN1 ON and FAN1 OFF.

EX. FAN1 ON = 70°C and FAN1 OFF = 60°C ***INTELLIFAN START* = 65°C**

Before enabling the function, please check that the connection on the two fan bars is distributed so that to have the bar on the right side connected to relay FAN2, pin 1-2, and the bar on the left side connected to FAN1, pin 3-4 .

By selecting **FAN1 "NO or YES**", the function shall be disabled.

Remarks: when the FAN1 threshold is exceeded the control unit shall activate both bars operation.

In order to enable ***INTELLIFAN function please refer to "Programming"*** section page 19-20.

Note: for a correct operation of the INTELLIFAN function, it is recommended to respect a ΔT of 10°C between FAN1 ON and FAN1 OFF. Moreover, the connection with the VRT series devices involves the disabling of the Intellifan function. The FAN1 contact must be directly connected to the enable contact of the VRT device.

OUTPUT RS485 MODBUS

(ONLY FOR NT935 IR AD)

MODBUS INSIDE MODULE INTRODUCTION

The expansion module MODBUS INSIDE is built-in in the control unit and allows the data transfer on a RS485 line with MODBUS RTU protocol, maximum 32 devices.

OPERATING NOTES

For the module to work correctly, it is necessary to set the RS485 network set-up parameters: address, baud rate, parity bit. See “Programming” steps 36 to 41 on page 20.
The serial communication of the temperature control monitoring unit is active only when the NT935 IR AD is in temperature control mode in one of the operation modes (Scan, Auto, Man and T.Max).
When other functions such as programming, programming display and relay test are activated, the ModBus communication is temporarily deactivated.

DATA TRANSMISSION ON MODBUS NETWORK

The MODBUS INSIDE internal module allows to connect the NT935 IR AD control unit to an RS485 network with Modbus RTU protocol in order to read the data shown in the MODBUS table on page 25 and write those indicated in section “Notes for remote programming”; the module is always in slave mode.
The NT935 IR AD control unit is in communication with the network only when it is in temperature reading mode, while it is inactive when in the following modes: display, programming and relay test.

RS485 ELECTRICAL CONNECTIONS

As far as the signal cable to be used in order to ensure the correct network operation is concerned, it is recommended to follow the provisions of the EIA RS485 standard which suggests using a 24AWG twisted pair.
The twisted pair that connects units in RS485 might need a 120 ohm end resistor on the last unit of the series.
Connect the twisted pair paying attention to polarities and lay the network avoiding to make sharp bends or ring windings in order not to modify line impedance. If necessary, the GND terminal for grounding is also available.
Always position the RS485 twisted pair far from power cables.

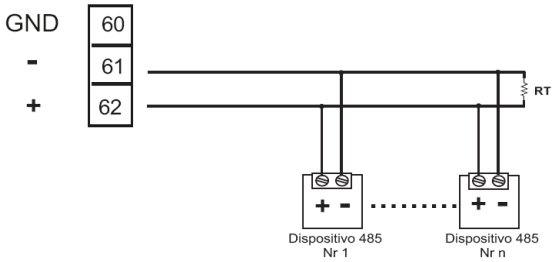

1MN0095 REV. 0

DATA FRAME

The frame in asynchronous transmission consists of: 1 start bit, 8 data bits, 1 parity bit (even or odd, if the parity has been set) and 1 stop bit.
With selection parity (none) you can select N-1 (1 stop bit) or N-2 (2 stop bits).
Admitted baud rates are: 2400, 4800, 9600, 19200 and 38400.
If not otherwise specified, the word length (DATA) is 16 bits.

DATA PACKET

A complete sequence of request/answer consists of the following:

Master request:

SLAVE ADDRESS	- 1 byte
FUNCTION CODE	- 1 byte
DATA	- variable, it depends on the function code
CRC	- 2 bytes

Slave answer:

SLAVE ADDRESS	- 1 byte
FUNCTION CODE	- 1 byte
DATA	- variable, it depends on the function code
CRC	- 2 bytes

FUNCTION CODE

The ModBus module supports the following function codes:

$3_{(10)}$: - holding register reading

$16_{(10)}$: - register multiple writing

If ModBus receives a message and a CRC error is detected, no answer is given.

CODE $3_{(10)}$.

Request:
Slave address, code $3_{(10)}$, Starting address HI, Starting address LO, Number of Point HI, Number of Point LO, Crc LO, Crc HI.

Answer:
Slave address, code $3_{(10)}$, Byte count, Data HI, Data LO……., Crc LO, Crc HI.

CODE $16_{(10)}$.

Request:
Slave address, code $16_{(10)}$, Starting address HI, Starting address LO, Number of Point HI, Number of Point LO, Byte count, Data HI, Data LO……., Crc LO, Crc HI.

Answer:
Slave address, code $16_{(10)}$, Starting address HI, Starting address LO, Number of Register HI, Number of register LO, Crc LO, Crc HI.

REMOTE PROGRAMMING NOTES

The writable registers are shown in TABLE MODBUS MAPPING referred to as W or RW (**write or read / write**) max. number of registers 72, see table page 25-28

Channels 1÷3 cannot be disabiled; in case of wrong setting they can be forced as enabled channels.

In case channel 4 is not enabled and/or the information is not foreseen, the following answers are available:

1. **Detected temperatures = 0000 (0°C)**
2. **AL./TRIP Temperature = Value written in E2PROM**
3. **Channel status = 0000**
4. **Channel setting = %00000000; %xxxxxxx0 (x=n.d.)**

If the information is sent to 4.20mA output = Chan_x and this is disabled, the HOT mode is forced; the same applies when programming from panel.

In the event that information is sent in writing to a register that cannot be written (READ only) data will be trashed without affecting the received message.
Even in remote programming via Modbus, data must always respect the rule T_trip> T_alarm and FAN_ON> FAN_OFF.

In case these thresholds are set incorrectly, the control unit NT935 IR AD will not proceed with the programming and storage of data, therefore in subsequent readings will read the data from the previous schedule.

After having sent a writing request, the control unit will take about 1” to store the data in eeprom and, during the storing, the module ModBus will not be able to process additional requests.

If the demand for programming is successful, the unit automatically resets and loads the new settings.

The "RELAYS STATUS" information indicates the state of excitation of the coils of the relays, so it will be subject to the "FAIL SAFE" commands.

At the end of the write command (Write) a data compatibility check is carried out:

- **if you have a non-compatibility, an "exception" answer is given and the data pack is rejected in its entirety. The code of the first incorrect data can be obtained by reading the log "Error received data" (Note: this code is lost during RESET, new switching on or when writing data in E2PROM);**
- **if the data are correct, they are transferred to the non-volatile memory (E2PROM) and the previous saved data are reset (Tmax = 0°C) and a system reset is subsequently forced.**
- **if the WRITE command implies only writing "COMMANDS", this will be implemented autonomously and without RESET, i.e. without affecting the data of the control unit.**

ERROR CODES (exception codes)

In case of a wrong request, ModBus will answer with modified codes and codified errors according to the following:

1: - Unsupported function code
2: - Wrong data address
3: - Wrong data (for instance, length)

The memory area containing the HFN datum must undergo no forcing.

In case all the fans are turned off (FAN1, FAN2) the test of the relays will not take place.

NOT ACCEPTABLE DATA

Some programmino modes are not acceptable as they are not settable on NT935 IR AD. Those data shall be thrashed without any error message (EXCEPTION CODE).

CH 1-2-3: → cannot be disabled
CH 1-2-3: → FAN_2 cannot be enabled
CH 4: → FAN_1 cannot be enabled
CH 4: → FAN_INT cannot be enabled
CH 4: → FAN_2 cannot be enabled if CH 4=no

ILLEGAL DATA

On the other hand, some combinations are programming errors as they are wrong settings. In this case the error code is ILLEGAL_DATA. This information is accessible to ModBus reading the register 7.

NO ERROR		NO ERROR
CH_1 Trip ≤ Alarm		Error code 01
CH_4 Trip ≤ Alarm		Error code 04
FAN_1 ON ≤ OFF 0 FAN INT ≤ 10		Error code 017
FAN_2 ON ≤ OFF		Error code 018
Value HFN > max	see table: SYSTEM - Setting and Status	Error code 020
Value FCD > max	see table: SYSTEM - Setting and Status	Error code 021
Value 4.20 > max	see table: SYSTEM - Setting and Status	Error code 022
Value Voting > max	see table: SYSTEM - Setting and Status	Error code 023

Remark: If the value of Voting is higher than the max value expected for the model in question, it will be set equal to "0", that is NO_VOTING.

GENERAL UNIT NOTE

The several models of the unit can be equipped with different options; to avoid confusion, their model is defined by firmware and it is indicated at the switching on through dedicated messages on the display LEDs .

This information can be accessed by reading the Modbus register 6 (options) with the following meaning :

LOW Byte

Bit_0 = AD: 4.20mA + RS485 Modbus

HIGH Byte

Bit_0/1 = 10 - Range -40°C ÷ +200°C
Bit_4/7 = 0010 – Sensor TIR409

Note: in case the values programmed from ModBus are out of range, it will generate a "exception" error response

POLLING FREQUENCY

It is recommended to choose polling frequencies equal to or higher than 1".
Higher frequency polling may overload the system without generating any benefit

MODBUS MAPPING TABLE

HEADER (information and commands):

Address LO (10)	**Data HI**	**Data LO**	**R: read W:write RW: read/write**
1	Model – MSD (ASCII)	Model - 3° Digit (ASCII)	R
2	Model - 2° Digit (ASCII)	Model – LSD (ASCII)	R
3	Space (20H)	Vers. Fw – MSD(ASCII)	R
4	Vers. Fw - 2° Digit (ASCII)	Vers. Fw – LSD(ASCII)	R
5	Channels qty. (2*ASCII)		R
6	Options (see remarks)	Options (see remarks)	R
7	00	Error in received data	R-see table
8	00	Info several reasons	R-see table
9	00	Commands	W-see table

SYSTEM: Setting and Status

Address LO (10)	**Data HI**	**Data LO**	**Note 1**	**Note 2**	**R: read W:write RW: read/write**
10	00	HFN (Fan test)	0=No test	1÷200h	RW
11	00	FCD	temperature increase	0=No FCD 1÷30°/sec	RW
12	00	Voting	0=No 1= Enable		RW
13	00	CPU Setting	See Note		RW
14	00	CPU Error	See Note		R
15	00	Relè Status	See Note		R
16	00	420 mA channel	reference channel for 4.20 mA	0=hot 1÷4= ch1÷4 5=scan	RW

17	00	Address	Modbus address	1÷255	R
18	00	Bdr	Modbus baud rate	0=2400 1=4800 2=9600 3=19200 4=38400	R
19	00	Parity	Modbus parity bit	0=N-1 None(1stop) 1=Even 2=Odd 3=N-2 None(2stop)	R
20	00	FREE	See Note		R

TEMPERATURE FANs:

Address LO (10)	Data HI	Data LO	Note 1	Note 2	R: read W:write RW: read/write
21	2'compl. sign	Fan_1 ON	1°C ÷ 200°C		RW
22	2'compl. sign	Fan_1 OFF	1°C ÷ 200°C		RW
23	2'compl. sign	Fan_2 ON	1°C ÷ 200°C		RW
24	2'compl. sign	Fan_2 OFF	1°C ÷ 200°C		RW

TEMPERATURE Channels 1÷4:

Address LO (10)	Data HI	Data LO	Note 1	Note 2	R: read W:write RW: read/write
25	2'compl. sign	2'compl. Ch1 temper.	–48°C ÷ 200°C		R
26	2'compl. sign	2'compl. Ch1 max temperat.	0°C÷200°C		R
27	2'compl. sign	2'compl. Ch1 temper. alarm set point	1°C÷200°C	(AL)	RW
28	2'compl. sign	2'compl. Ch1 temper. trip set point	1°C÷200°C	(TRP)	RW
29	2'compl. sign	2'compl. Ch2 temper.	–48°C ÷ 200°C		R
30	2'compl. sign	2'compl. Ch2 max temperat.	0°C÷200°C		R
31	2'compl. sign	2'compl. Ch2 temper. alarm set point	1°C÷200°C	As (AL)	RW
32	2'compl. sign	2'compl. Ch2 temper. trip set point	1°C÷200°C	As (TRP)	RW
33	2'compl. sign	2'compl. Ch3 temper.	–48°C ÷ 200°C		R
34	2'compl. sign	2'compl. Ch3 max temperat.	0°C÷200°C		R

35	2'compl. sign	2'compl. Ch3 temper. alarm set point	1°C÷200°C	As (AL)	RW
36	2'compl. sign	2'compl. Ch3 temper. trip set point	1°C÷200°C	As (TRP)	RW
37	2'compl. sign	2'compl. Ch4 temper.	–48°C ÷ 200°C		R
38	2'compl. sign	2'compl. Ch4 max temperat.	0°C÷200°C		R
39	2'compl. sign	2'compl. Ch4 temper. alarm set point	1°C÷200°C		RW
40	2'compl. sign	2'compl. Ch4 temper. trip set point	1°C÷200°C		RW
41	00	00			R
42	00	00			R
43	00	00			R
44	00	00			R
45	00	00			R
46	00	00			R
47	00	00			R
48	00	00			R
49	00	00			R
50	00	00			R
51	00	00			R
52	00	00			R
53	00	00			R
54	00	00			R
55	00	00			R
56	00	00			R

CHANNELS 1÷4: Setting

Address LO (10)	Data HI	Data LO	Note 1	Note 2	R: read W:write RW: read/write
57	00	Ch1 Setting	See Note CHx		RW
58	00	Ch2 Setting	See Note CHx		RW
59	00	Ch3 Setting	See Note CHx		RW
60	00	Ch4 Setting	See Note CHx		RW
61	00	00	--		R
62	00	00	--		R
63	00	00	--		R
64	00	00	--		R

CHANNELS 1÷4: Status

Address LO (10)	Data HI	Data LO	Note 1	Note 2	R: read W:write RW: read/write
65	Ch1 story	Ch1 status	See Note CHx		R
66	Ch2 story	Ch2 status	See Note CHx		R
67	Ch3 story	Ch3 status	See Note CHx		R
68	Ch4 story	Ch4 status	See Note CHx		R
69	00	00	--		R
70	00	00	--		R
71	00	00	--		R
72	00	00	--		R

REGISTER NOTE

INFO various causes (READ)

BIT 7	BIT 6	BIT 5	BIT 4	BIT 3	BIT 2	BIT 1	BIT 0
--	--	--	-	-	-	-	*(*) RESET (R) has taken place*

COMMANDS (WRITE)

BIT 7	BIT 6	BIT 5	BIT 4	BIT 3	BIT 2	BIT 1	BIT 0
--	--	--	-	-	*(*) Reset CPU_Error*	*(*) Reset historical data*	*(*) Zero. BIT: RESET has taken place*

CHn SETTING

BIT 7	BIT 6	BIT 5	BIT 4	BIT 3	BIT 2	BIT 1	BIT 0
--	--	--	--	FAN_INT	FAN2	FAN1	CAN_enable.

CHn STATUS

BIT 7	BIT 6	BIT 5	BIT 4	BIT 3	BIT 2	BIT 1	BIT 0
--	TRIP	ALARM	FAN_2	FAN_1	FCD	FOC	FCC

CHn STORY

BIT 7	BIT 6	BIT 5	BIT 4	BIT 3	BIT 2	BIT 1	BIT 0
--	TRIP	ALARM	--	--	--	FOC	FCC

RELAY STATUS (coil energizing status)

BIT 7	BIT 6	BIT 5	BIT 4	BIT 3	BIT 2	BIT 1	BIT 0
--	--	--	FAULT relay 1=ON	TRIP relay 1=ON	ALARM relay 1=ON	FAN_2 relay 1=ON	FAN_1 relay 1=ON

CPU ERROR

BIT 7	BIT 6	BIT 5	BIT 4	BIT 3	BIT 2	BIT 1	BIT 0
--	--	--	--	PT ERROR	CAL	FCD Fault	ECH

CPU SETTING

BIT 7	BIT 6	BIT 5	BIT 4	BIT 3	BIT 2	BIT 1	BIT 0
--	--	--	Failsafe fault	Failsafe trip	Failsafe alarm	--	--

FAIL SAFE FUNCTION

The NT935 has n.o selection (contact open) / n.c (normally closed contact) for ALARM, TRIP and FAULT relays, programming steps 30 to 35 page 20. The selection of the setting YES/NO introduces functions Fail Safe and No Fail Safe.

ALARM AND TRIP
Setting NO (NO Fail safe) normally open contacts are in positions 5-7 Alarm and 8-10 Trip, they switch only when limits are reached preset temperature.

Setting YES (Fail Safe) normally closed contacts are in positions 5-7 Alarm and 8-10 Trip, they switch only when limits are reached preset temperature.

FAULT
Setting YES (Fail safe) the contact 11-12 is positioned as normally open, switches (closed) when a fault condition is identified; see section on page 17 alarms and ventilation.

Setting NO (NO Fail safe) the contact 11-12 is positioned as normally closed, switches (open) when a fault condition is identified; see section on page 17 alarms and ventilation.

Disabling the failsafe function on the fault contact the unit will no longer be able to report the fault for lack of power. In this case it is suggested that the enabling of the fail safe on the ALARM contact for the above indication.

NOTE: When the unit is located in one of the methods described below does not monitor heat, also the relay will all be banned, the FAULT led start blinking.

- Vis. display programming.
- PRG programming.
- Test of the relays.

The FAIL SAFE is temporarily disabled The FAULT relay switches.

OUTPUT 4.20mA

(ONLY FOR NT935 IR AD)

It is possible to connect a display or acquisition device to the 4.20 mA output.
The permitted load impedance for each output is from 0 to 500 ohm.
The loop is optically isolated to guarantee the maximum immunity to interferences.

The 4-20 mA signal is referred to the -40÷200°C range with an accuracy of 1% of full scale value

The output can be programmed in the following modes:

1-2-3-4: the 4.20 mA output refers to the fixed channel that has been set.
SCAN: the 4.20 mA output automatically scans the active channels every 2 seconds (default setting)
HOT: the 4.20mA output automatically refers to the hottest channel among the active ones

See steps 42 – 43 in the table page 20.

Remark: if the 4.20 output is programmed on CH*4* and this is disabled, the control unit will automatically set on HOT.

The current-temperature ratio varies according to the device temperature range:

For range –40°C + 200°C ratio is: I_{out}= (T/15)+6.7 (T=temperature in °C)

Esempio range -40°C + 200°C :

Se T=100°C I_{out}= 100/15+6,7= 13,37 mA (±0.2 mA)

Note: It is recommended to use a screened and twisted cable; connect the twisted pair taking polarities into account and lay the network avoiding narrow bends or ring windings. Always position the twisted pair away from power cables.

FCD FUNCTION

The NT series equipment boasts an innovative control function combined with the dynamic status of the TIR409 sensor.

Activating the FCD function, the control unit analyses the increase in temperature ΔT (*) recorded in a second (**°C/sec**).

Enabling this function, the user can select a value (ΔT) from a minimum of 1°C/sec to a maximum of 30°C/ sec. If the value detected is higher than the value set by the user, the control unit inhibits the possible activation of the ALARM and TRIP alarms and switches the FAULT relay (11-12), displaying the message "Fcd fault".

Example: if we set the function at 5°C, on the monitored system the FAULT will switch only if the control unit detects an increase in ΔT higher than 5°C in a second.

By selecting “NO”, the FCD function is disabled.

When a channel is in FAULT for FCD, the relative Alarm and Trip warnings are inhibited; therefore only a massive and quick temperature increase is highlighted.

Press Reset to delete the FCD warnings on all channels and reset the FAULT relay.

Possible FCD applications

Identification of a possible induced interference on the TIR409 sensor line.

If the installation instructions are not respected (see page 11), any interference on the TIR409 sensor line can cause false readings or irregular alarms.

Setting the FCD function in a temperature range of between 1°C and 10°C (5°C is the recommended value), the effects caused by false readings can be suppressed and the alarm relay activation can be prevented, as shown above.

Corrective actions: check if the installation of the sensor extension cable is in line with the instructions given in the section “**CONNECTION OF TIR409 SENSORS WITH THE NT935 IR MONITORING UNIT”** on page 11.

Identification of a sensor fault or faulty connection

In case of a faulty connection or sensor fault, a quick positive or negative variation in temperature might occur, leading to the system tripping or to the triggering of the alarms of the monitored system.
In this specific case we recommend the FCD function to be set in a temperature range of between 10°C and 20°C.
Corrective actions: check if the terminals where the sensor is connected are tightened and replace the faulty sensor, if required.

Identification of the electrical motor rotor block

In case of temperature control of the electrical motors, the quick temperature increase might be due to a blocked rotor.

In this specific case we recommend the FCD function to be set in a temperature range of between 20°C and 30°C**.** This setting is recommended in order to prevent the FCD function from activating during motor startup, or where the **ΔT/sec.** increase varies quickly.

(*) The ΔT value shows the temperature range for each second.

NOTE: it is recommended not to enable the FCD function with active VOTING.

WARRANTY CONDITIONS

The Product purchased is covered by the manufacturer or seller warranty at the terms and conditions set forth in the "Tecsystem s.r.l. General Conditions of Sale", available at www.tecsystem.it and / or in the purchase agreement.
The warranty is considered valid only when the product is damaged by causes attributable to TECSYSTEM S.r.l. such as manufacturing or components defects.
The warranty is invalid if the Product proves to have been tampered with / modified or incorrectly connected. The same applies in case of supply voltages outside the limits, non-compliance with the assembly and use data and instruction as described in this instruction manual.
The warranty is always intended EX Corsico (MI) as stated in the "General Conditions of Sale".

,

IMPORTANT WARNING

Before carrying out the isolation test of the electrical panel where it is installed, disconnect the control unit (as well as the sensors) from the power supply to prevent it from being seriously damaged.

TROUBLESHOOTING	CAUSES AND *SOLUTIONS*
The control unit does not switch on and the supply to terminals 40-42 is correct.	Check that the connector is correctly inserted into its housing, the wires are tightened, there is no evidence of burning on the connectors. Disconnect the power supply, carry out the above and reconnect.
CH4 is in FAULT condition due to FCC (only 3 TIR409 sensors are connected)	Programming error of the CHn / YES control unit. *Check and repeat programming as per page 19-20, select CH4 / NO.*
One of the channels is in FAULT conditions due to FCC	Check the connection of the TIR409 sensor as it may be disconnected.
When turning on the display shows “ECH”	A strong disturbance damaged the stored data. See the section “Programmed data diagnostics” on page 18.
All the IR sensors are in FAULT	Wrong IR sensor connections. Terminal board mounted upside down. Check the connections and the terminal board.
The temperature shown by one or more channels is wrong	Contact the TECSYSTEM Technical Department.
Sudden trip of the main switch. The temperature is on standard levels. Only one channel caused the trip.	Check the temperatures recorded in T-MAX, check the instructions given in the paragraphs “Connection of TIR409 sensors” on page 11. Activate the FCD function.
FCD warning	See the FCD function on page 31
Should the problem not be solved, contact *TECSYSTEM Technical Department..*	

EQUIPMENT DISPOSAL

European directives 2012/19/EC (WEEE) and 2011/65/EC (RoHS) have been approved to reduce electrical and electronic waste and promote the recycling and reuse of the materials and components of said equipment, cutting down on the disposal of the residues and harmful components of electrical and electronic materials.



All the electrical and electronic equipment supplied after 13 August 2005 is marked with this symbol, pursuant to European directive 2002/96/EEC on electrical and electronic waste (WEEE). Any electrical or electronic equipment marked with this symbol must be disposed of separately from normal domestic waste.

Returning used electrical devices: contact TECSYSTEM or your TECSYSTEM agent for information on the correct disposal of the devices.

TECSYSTEM is aware of the impact its products have on the environment and asks its customers active support in the correct and environmentally-friendly disposal of its devices.

USEFUL CONTACTS

TECHNICAL INFORMATION : ufficiotecnico@tecsystem.it

SALES INFORMATION : info@tecsystem.it