8.2.2 Actuator PNC3008B02

8.2.2.1 Technical Data PNC3008B02



Doc003006.png

Actuator, bolted to manifold	
Valve pin operation	
Operation medium	pneumatic
Pressure range	6 - 12 bar (87 - 174 psi)
Pressure max.	14 bar (203 psi)
Flow rate	2 l/min
Valve pin stroke	8 mm
Adjustment	± 1 mm via adjustment threads from topside
Closing force	424 N / 6 bar (87 psi)
Opening force	332 N / 6 bar (87 psi)
Cooling	
The design provides an indirect cooling through the back plate (max. 80 °C / 175 °F), otherwise cooling lines are required.	
Piping	No piping.
Valve pin	
Valve pin diameter	Ø 3 mm
Attachment	T - head Valve pin is not secured against rotation.

NOTICE

To ensure long life and continued flawless operation of the actuator, we recommend using filtered compressed air.

The coolant used should be properly modified, e.g. filtered water with an anti-corrosion and frost-proof agent.

8.2.2.2 Exploded View PNC3008B02

This section describes the disassembly and reassembly process to replace seals.

In this section the actuator parts are identified with the numbers indicated in the following figure, which shows the components.

NOTICE

Always tighten the screws to the torques specified in the respective table (section 13).

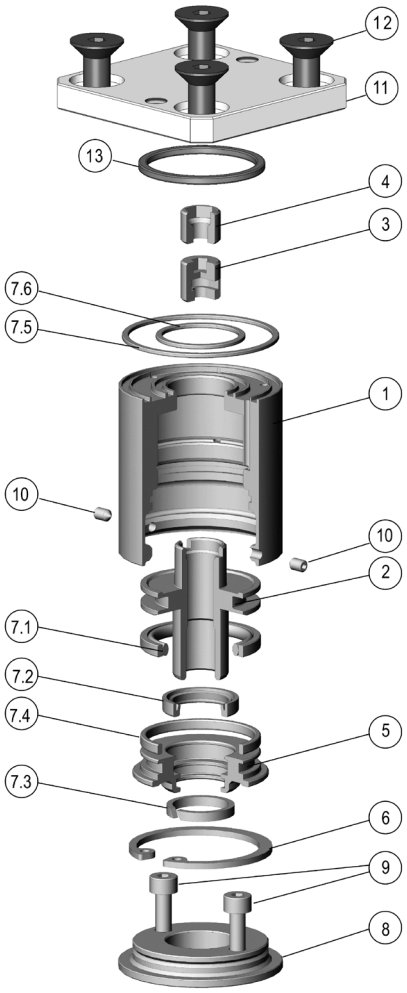

Doc006551.png

Actuator Parts - PNC3008B02			
No.	Qty.	Description	Item
(1)	1	Cylinder housing	PNC3008CH01
(2)	1	Piston	PNC3008PI02
(3)	1	Hanger screw	PNC3008HS01
(4)	1	Lock screw	PNC3008LS01
(5)	1	Buffer	PNC3008BU01
(6)	1	Retaining ring for bores	DIN472/34X1.5
(7)	1	Seal Kit PNC3008	PNC3008B01SK01
(7.1)	1	Piston seal	K30-30-22.5-3.2-VIOR
(7.2)	1	Rod seal	C1-1039-V3664
(7.3)	1	Guiding element	FB2.3-1.5L41.5
(7.4)	1	O-ring seal	VIOR-26x2-FPM80
(7.5)	1	O-ring seal	VIOR-36x1.5-FPM80
(7.6)	1	O-ring seal	VIOR-19x1.5-FPM80
(8)	1	Holding ring	PNC3008HR01
(9)	2	Hexagon socket cap screw	DIN912-M4X14-12.9
(10)	2	Hexagon socket set screw	DIN914-M3X5-45H
(11)	1	Cover Plate for PNC3008B	PNC3008B-CP-01 (optional)
(12)	4	Hexagon socket countersunk head cap screw	DIN7991-M5X10-10.9 (optional)
(13)	1	Viton O-Ring 20.35 x 1.78 FPM80 green	VIOR-20.35X1.78-FPM-80-G (optional)

RESTRICTED: Property of Synventive.
For limited third party distribution based on need and intended use.
All rights reserved. Errors and omissions excepted
© 2022 Synventive Molding Solutions

8.2.2.3 Tools for Assembling, Disassembling and Adjusting the Actuator

The following overview contains a list of special tools needed for the assembly and disassembly of the actuator and to replace seals.

The assembly and disassembly tools are identified with the numbers indicated in the following figure, which shows the components in this section.

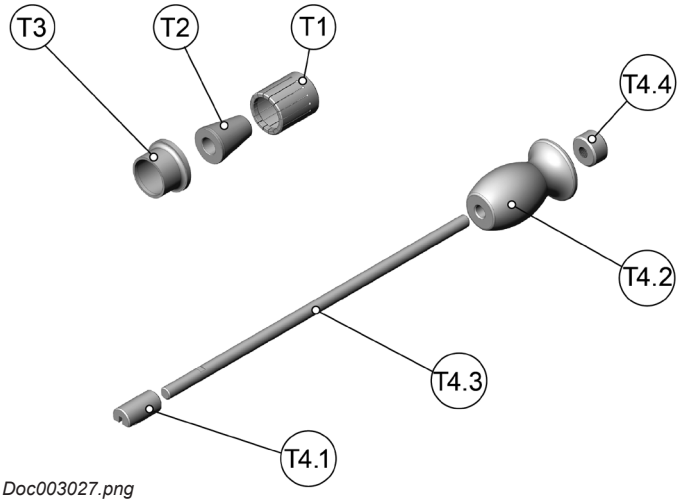

Doc003027.png

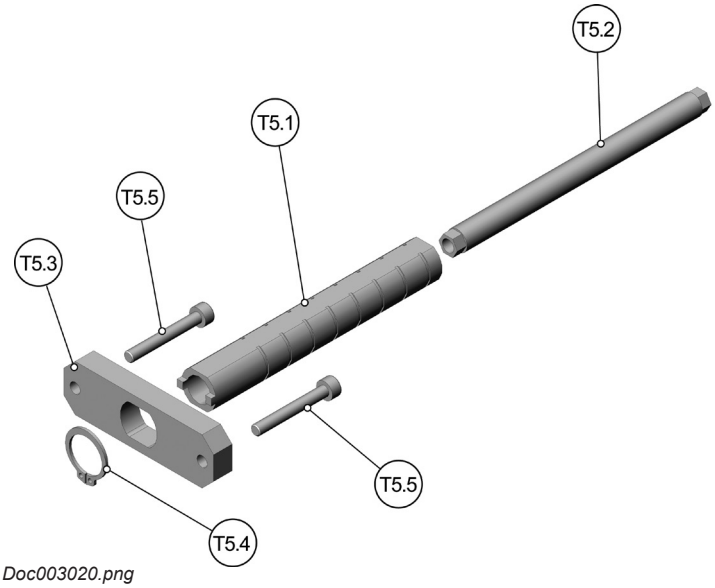

Doc003020.png

Tools to Mount Actuator Seals and the Piston		
No.	Description	Item
(T1)	Spreader sleeve	ATCYL15
(T2)	Mounting cone	ATCYL14
(T3)	Calibration sleeve (cone 30)	ATCYL13
Valve Pin Disassembly Tool ATCYL16		
No.	Description	Item
(T4.1)	Adapter for valve pin ø 3 mm and ø 3,8 mm	ATCYL1601
(T4.2)	Slice hammer	ATCYL0101
(T4.3)	Guid	ATCYL0102
(T4.4)	Stop bolt	ATCYL0104
Assembly Tool ATCYL12		
No.	Description	Item
(T5.1)	Adjustment Tool Typ01	ATCYL1201
(T5.2)	Adjustment Tool Typ02	ATCYL1202
(T5.3)	Adjustment Tool Typ03	ATCYL1203
(T5.4)	Retaining ring	DIN471-15x1
(T5.5)	Socket head cap screws	DIN912-M4x30-12.9

NOTICE

The tools ATCYL13, ATCYL14, ATCYL15 and ATCYL16 are not included with the Hot Runner System and must be ordered from Synventive separately.

All rights reserved. Errors and omissions excepted
© 2022 Synventive Molding Solutions

8.2.2.4 Disassembling Actuator PNC3008B02

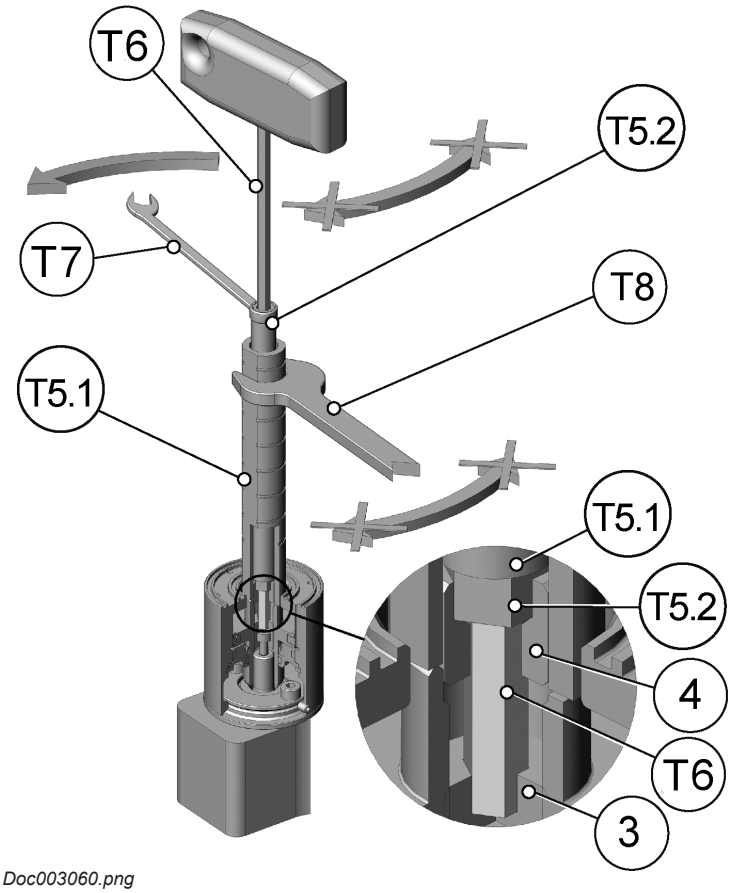

Doc003060.png

NOTICE

For actuator disassembly the lock screw (4) of the hanger screw (3) needs to be loosened.

1) Hold against turning:
   - Piston (2) with the adjustment tool (T5.1).
   - Hanger screw (3) with the hexagon socket wrench (T6).
2) At the same time loosen the lock screw (4) with the assembly tool (T5.2) and ring wrench (T7).

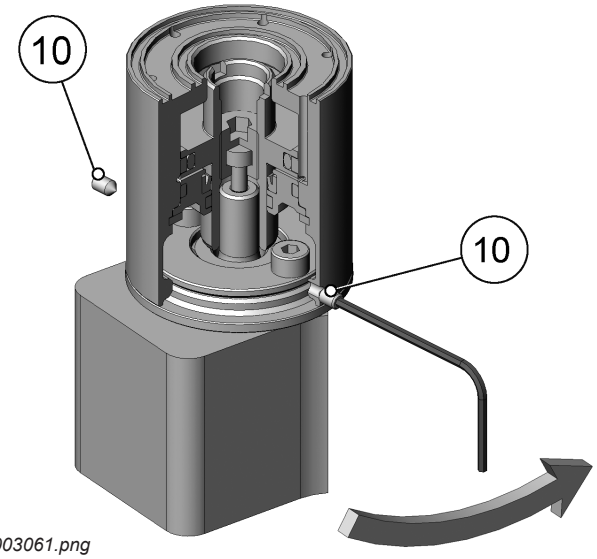

Doc003061.png

3) Unscrew hexagon socket set screws (10).

All rights reserved. Errors and omissions excepted
© 2022 Synventive Molding Solutions

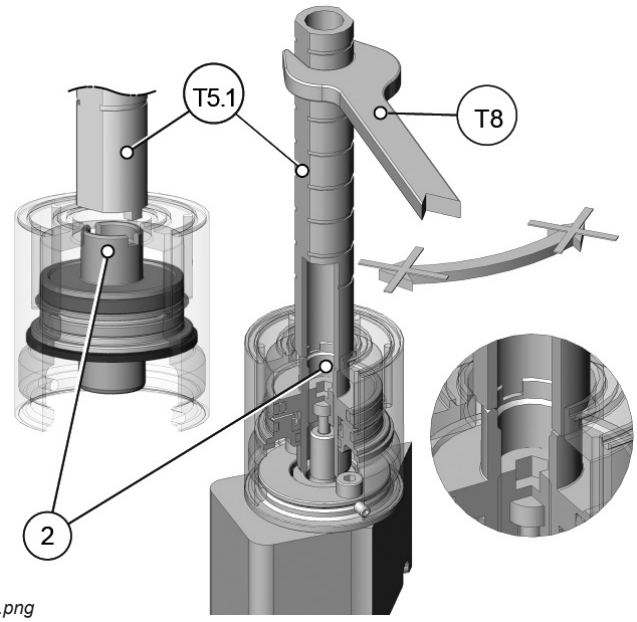

Doc003059.png

4) Slip the lug of the tool ATCYL1201 (T5.1) into the gap of the piston (2).
5) Tighten the piston (2) with tool ATCYL1201 (T5.1) and flat wrench 13 mm (T8).

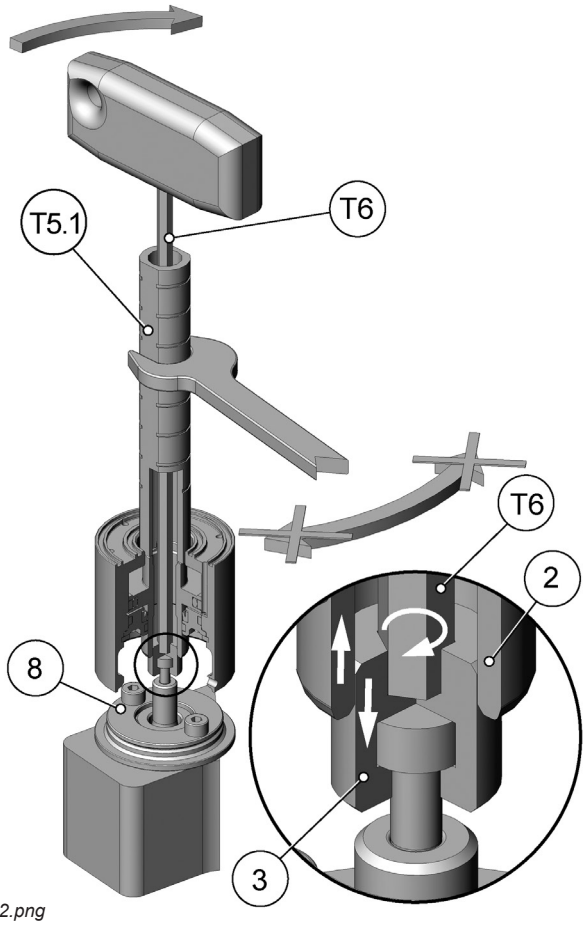

Doc003062.png

6) With Hexagon socket wrench (T6) turn the hanger screw (3) clockwise until the hanger screw (3) is unscrewed out of the piston (2).

NOTICE

The actuator will be lifted from the holding ring (8) and will be separated from the valve pin and hanger screw (3).

All rights reserved. Errors and omissions excepted
© 2022 Synventive Molding Solutions

7) Loosen the hanger screw (3) from the valve gate pin (VP).

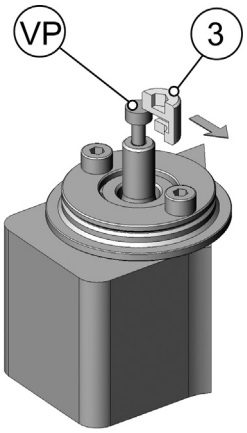

Doc003055.png

8) Remove the retaining ring (6).

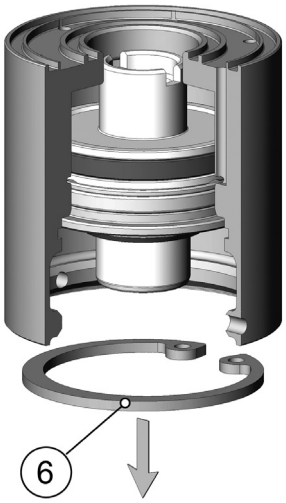

Doc003056.png

9) Press the piston (2) and buffer (5) out of the cylinder housing (1).
10) Dismount the two piston seal (7.1) elements.
    - O-ring (7.1) (a)
    - Sealing element (7.1) (b)
11) Dismantling the valve pin (see section 9.1).

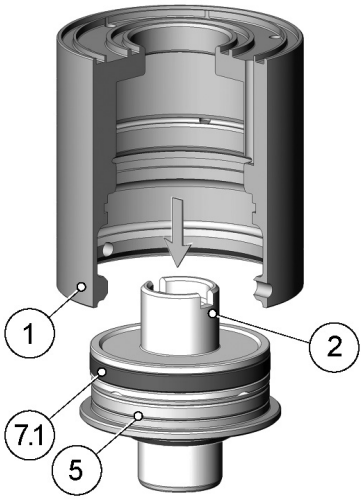

Doc003058.png

All rights reserved. Errors and omissions excepted
© 2022 Synventive Molding Solutions

8.2.2.5 Assembling the Actuator PNC3008B02

Lubrication of Piston and Ring Seals

NOTICE

For lubrication use Krytox GPL205.

To Lubricate the piston sliding surface is essential for the actuator life time.

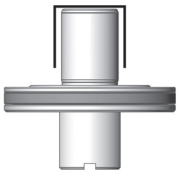

Doc003777.png

To Lubricate the piston ring seals is helpful to assemble the actuator.



Doc006315.png

Installation of the Sealing Ring on the Piston

1) Put the mounting cone (T2) on the piston (2).

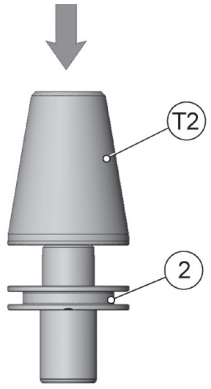

Doc003007.png

NOTICE

After disassembly of the sealing elements, the original seals should be replaced.

2) Mount the O-ring (7.1) (a) into the seal groove of the piston (2).
3) Using the spreader sleeve (T1) and the mounting cone (T2), push the sealing element (7.1) (b) into the seal groove of the piston (2).

NOTICE

The sealing element (7.1) (b) is placed in the seal grove of the piston (2) above the O-ring (7.1) (a).

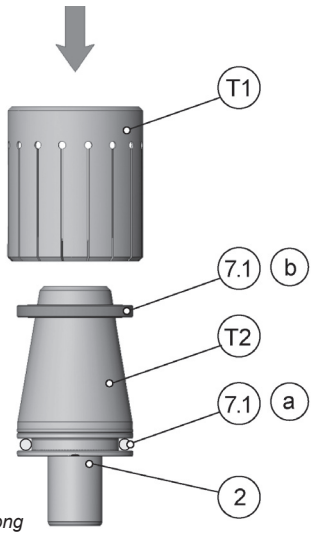

Doc003008.png

All rights reserved. Errors and omissions excepted
© 2022 Synventive Molding Solutions

Installation of the Piston into the Actuator Housing

1) Degrease the piston sliding surface.
2) Lubricate the piston sliding surface.

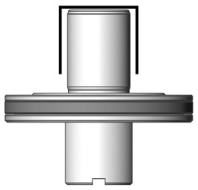

Doc003777.png

3) Insert the piston (2) into the calibration sleeve (T3).
4) Place the calibration sleeve (T3) into the cylinder housing (1).
5) Push the piston (2) into the cylinder housing.

NOTICE

The calibration sleeve (T3) prevents damage to the piston seal (7.1).

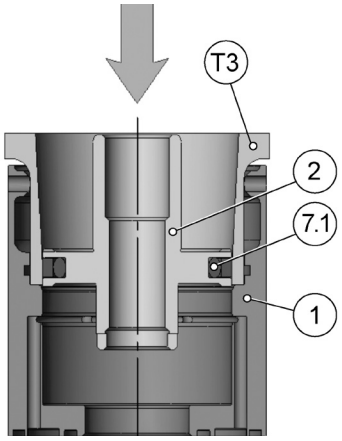

Doc003009.png

NOTICE

After disassembly of the system, the original seals should be replaced with new seals.

6) Install the following seals at the buffer (5).
   - Rod seal (7.2)
   - Guiding element (7.3)
   - O-ring seal (7.4)

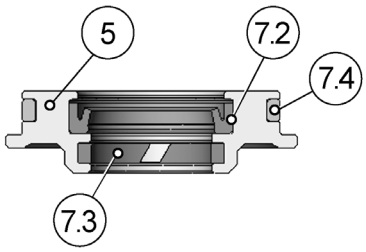

Doc003010.png

7) Mount buffer (5) into the cylinder housing (1).
8) Lock the buffer with the retaining ring (6).

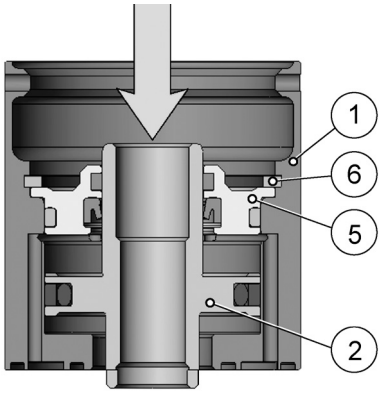

Doc003011.png

All rights reserved. Errors and omissions excepted
© 2022 Synventive Molding Solutions

9) Install the following seals at the actuator housing (1).
   - Viton-ring seal (7.5)
   - Viton-ring seal (7.6)

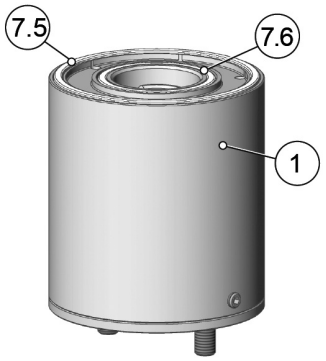

Doc003185.png

Mounting of the Actuator on the Manifold

1) Mount actuator to the holding ring (8).
2) Lubricate the thread of the hexagon socket set screws (10) with high-temperature assembly paste (anti-seize compound).

   NOTICE

   This is an important measure to prevent thread corrosion due to aggressive gases, which could be released during plastics processing.
3) Lock the actuator with hexagon socket set screws (10).
4) Push piston (2) in closed position.

   NOTICE

   Closed position is when the top edge of the piston has a distance of 3 mm to the top edge of the actuator housing.

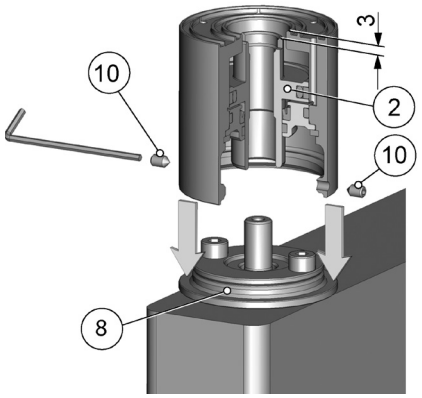

Doc003013.png

5) Mount the valve pin (VP) into the valve pin guide.
6) Place the hanger screw (3) on the valve pin (VP) head.

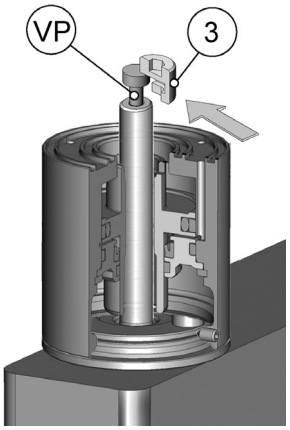

Doc003063.png

All rights reserved. Errors and omissions excepted
© 2022 Synventive Molding Solutions

8.2.2.6 Adjusting the Valve Pin to the Basic Position

1) Screw the valve gate pin (VP) with the hanger screw (3) into the piston (2).

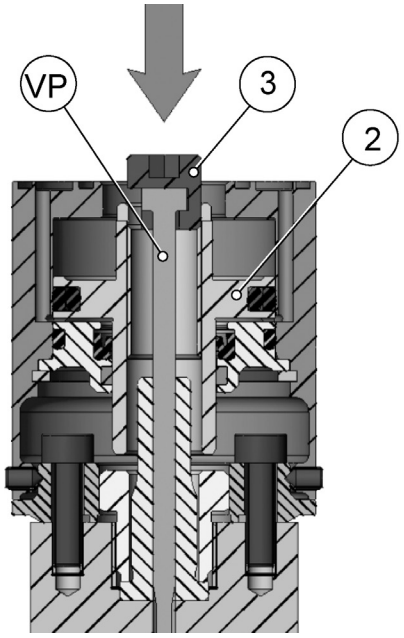

Doc003014.png

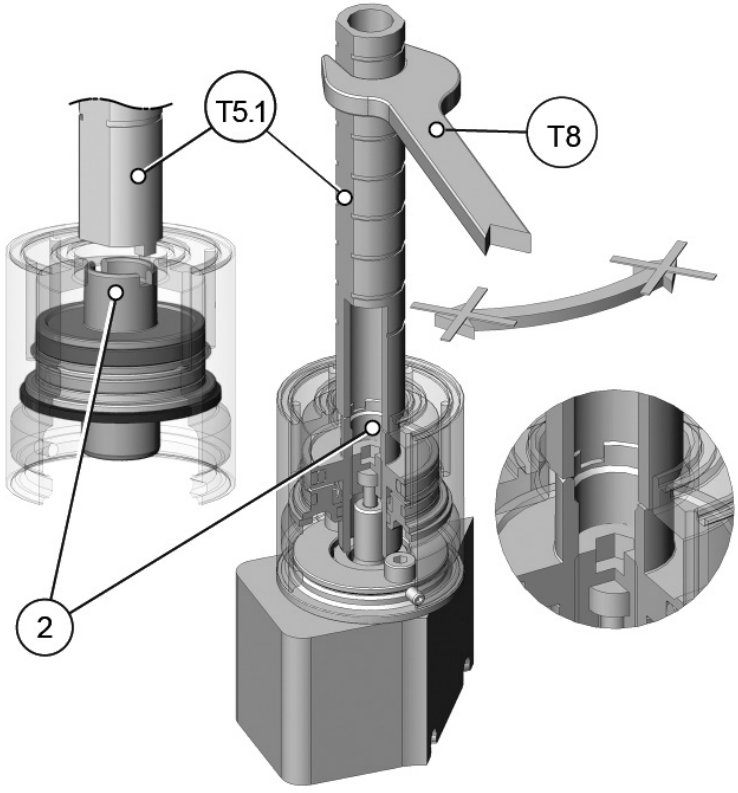

Doc003059.png

2) Hold the piston (2) against turning with the adjustment tool (T5.1) and a flat wrench 13 mm (T8).

All rights reserved. Errors and omissions excepted
© 2022 Synventive Molding Solutions

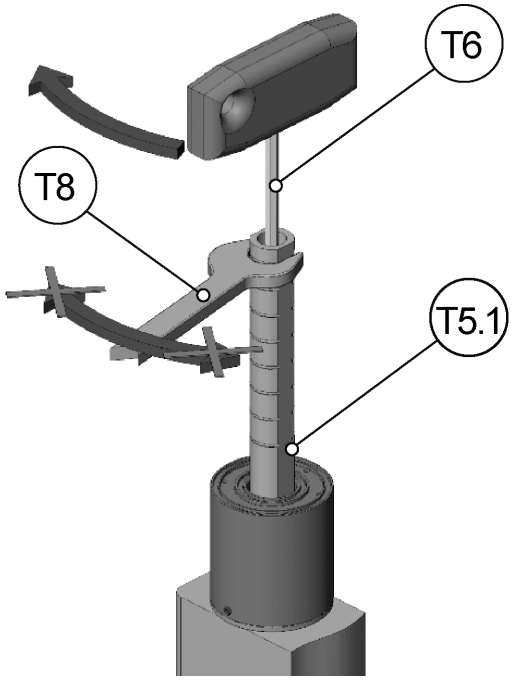

Doc003015.png

3) Adjust the valve pin with a hexagon socket wrench (T6) as followed.
4) Still hold the piston against turning with the adjustment tool (T5.1).

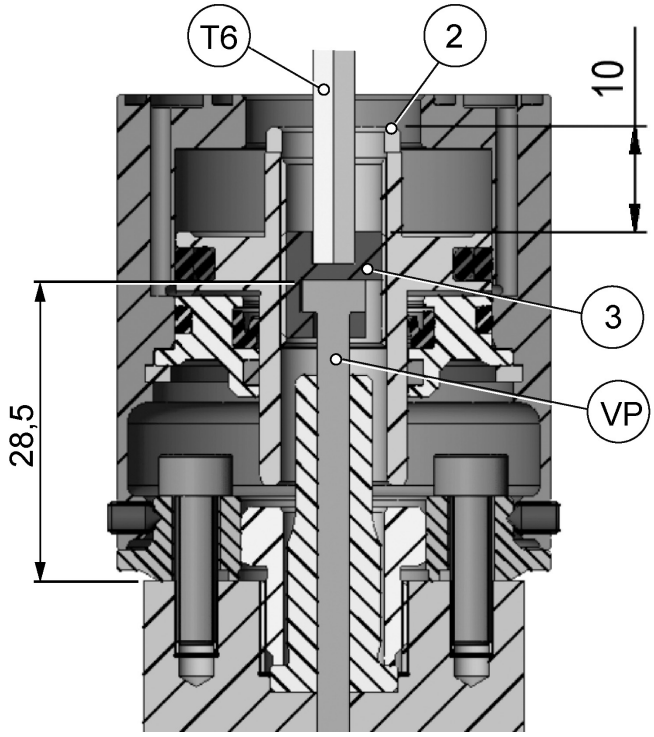

Doc003016.png

NOTICE

The basic setting for the valve gate pin is 10 mm between the piston (2) top edge and the top edge from the hanger screw (3).

5) Rotate the hanger screw (3) with a hexagon socket wrench (T6) into the piston (2).

NOTICE

The exact position for the valve pin (VP) has to be checked at the front of the valve pin - depends on the nozzle tip.

The reason to unscrew the hanger screw (3) would be for valve pin maintenance or replacement.

If the deviation to the basic settings of 10 mm is more than 0,5 mm, the adjustments do not correspond to the parameters of the mold or do not correspond to the Synventive standard.

All rights reserved. Errors and omissions excepted
© 2022 Synventive Molding Solutions

6) Wrap lock screw (4) with Teflon band (2 layer).
7) Rotate the lock screw (4) with the assembly tool (T5.2) into the piston (2).



Doc003017.tif

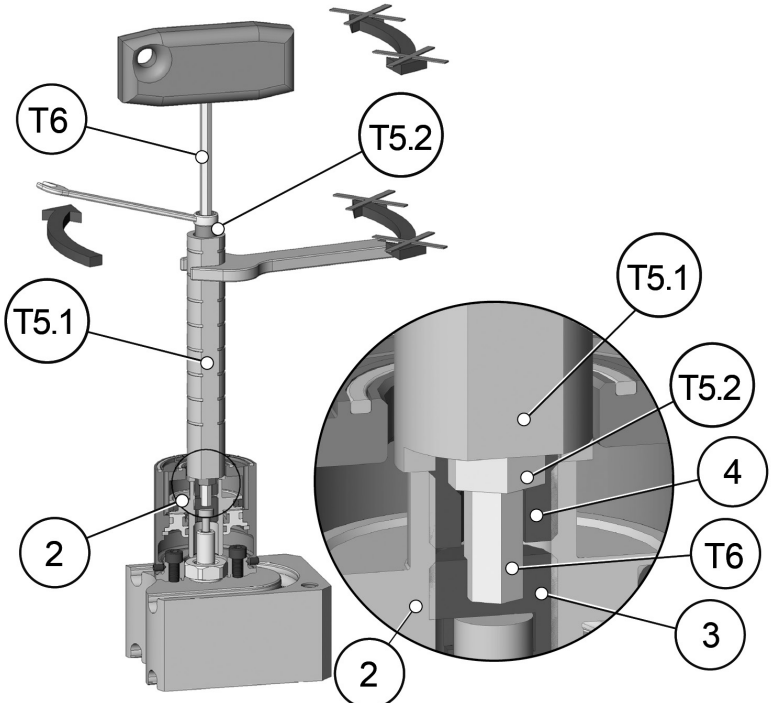

Doc003018.png

NOTICE

For actuator assembly the lock screw (4) has to be fastened against the hanger screw (3).

8) Hold against turning:
   - Piston (2) with the adjustment tool Typ01 (T5.1).
   - Hanger screw (3) with the hexagon socket wrench (T6).
9) At the same time tighten the lock screw (4) with the assembly tool (T5.2).

© 2022 Synventive Molding Solutions

8.2.2.7 Valve Pin Height Adjustment PNC3008B02

Precondition for the following steps are to be performed with the Hot Runner installed in the mold, and the system at operating temperature.

⚠ WARNING

Hot Surfaces Hazard

Contact between the skin and hot surfaces could result in burns.

Use personal protective equipment, such as gloves, apron, sleeves and face protection, to guard against burns.

When servicing or handling the hot runner system outside the manifold plates or the injection molding machine, care must be taken to heed the hot surface exposure warnings.

For first aid contact your medical / safety representing

Valve Pin Adjustment Tool Kit

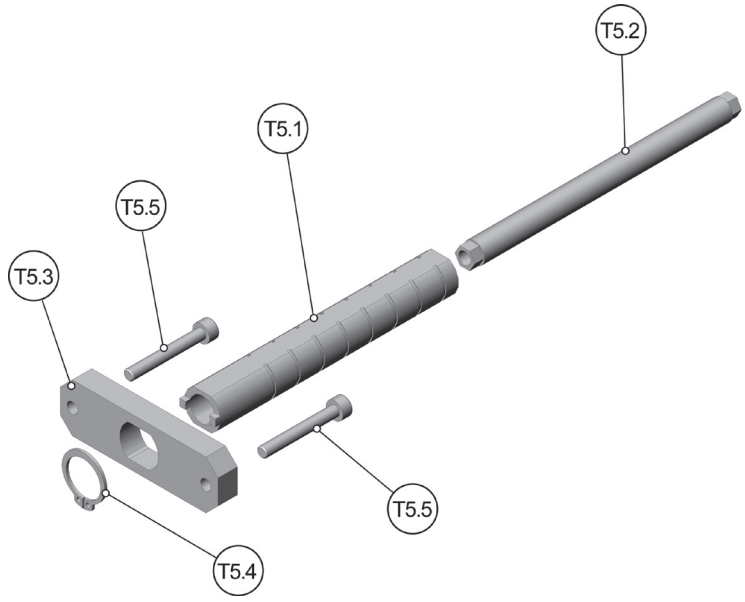

Doc003020.png

No.	Description	Item
(T5.1)	Adjustment Tool Typ01	ATCYL1201
(T5.2)	Adjustment Tool Typ02	ATCYL1202
(T5.3)	Adjustment Tool Typ03	ATCYL1203
(T5.4)	Retaining ring	DIN471-15x1
(T5.5)	Socket head cap screws	DIN912-M4x30-12.9

RESTRICTED: Property of Synventive.
For limited third party distribution based on need and intended use.
All rights reserved. Errors and omissions excepted
© 2022 Synventive Molding Solutions

Valve Pin Adjustment at mounted Hot Runner System

WARNING

Hot Surfaces Hazard

Contact between the skin and hot surfaces could result in burns.

NOTICE

The actuator is covered with a plate, containing the pneumatic access to the actuator.

1) Enable access to the actuator.

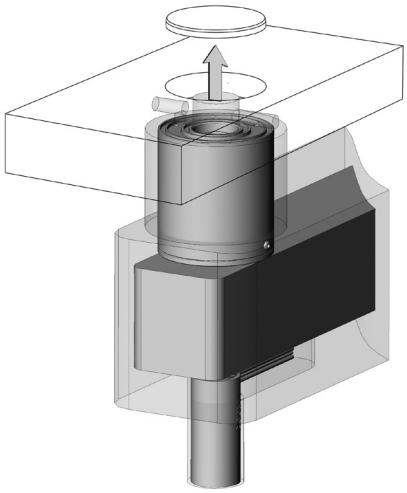

Doc003021.png

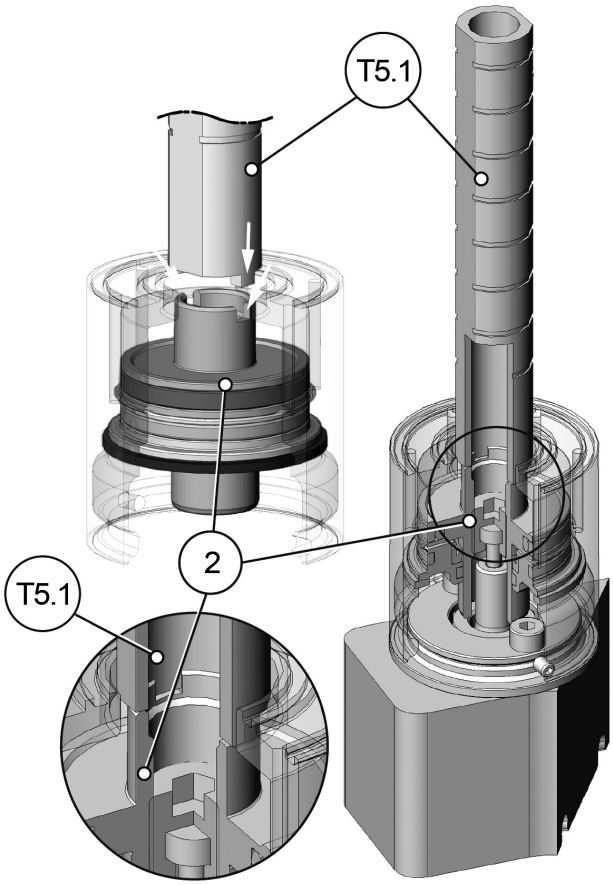

Doc003064.png

2) Slip the lug of the tool ATCYL1201 (T5.1) into the gap of the piston.

All rights reserved. Errors and omissions excepted
© 2022 Synventive Molding Solutions

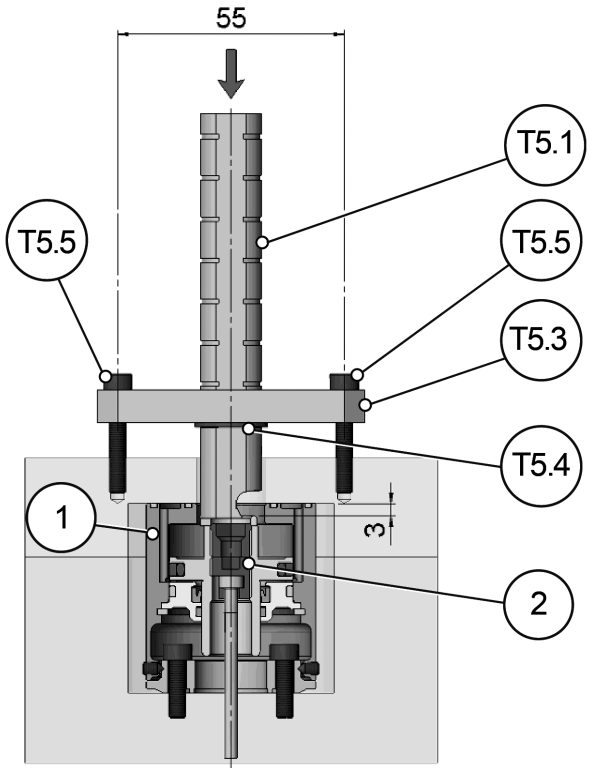

Doc003022.png

NOTICE

The piston is in the closed position, when the top edge of the piston (2) has a distance of 3 mm to the top edge of the actuator housing (1).

3) Push the fixed piston (2) forward to the close position.
4) Place the retaining ring (T5.4).at the tool ATCYL1201 (T5.1).
5) Place the ATCYL1203 (T5.3) on the retaining ring (T5.4) at the tool ATCYL1201 (T5.1).
6) Fix the piston (2) against upstroke and rotation with the socket head cap screws (T5.5).

NOTICE

Use torque wrench with wrench insert and the torques indicated in the torque table (section 13).

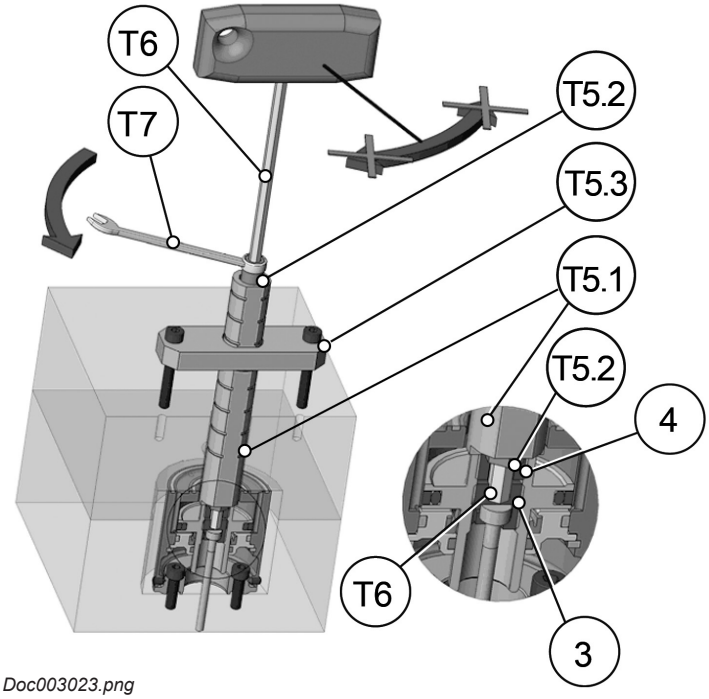

Doc003023.png

7) Fix the hanger screw (3) with the socket wrench (T6).
8) Slacken the lock screw (4) with the adjustment tool ATCYL1202 (T5.2) and ring wrench (T7) attached to it.

Legend to Doc003023.png

(T5.1) Adjustment tool Typ01 - ATCYL1201

(T5.2) Adjustment tool Typ02 - ATCYL1202

(T5.3) Adjustment tool Typ03 - ATCYL1203

(3) Hanger screw

(4) Lock screw

(T6) Socket wrench HEX 4

(T7) Ring wrench HEX 7

RESTRICTED: Property of Synventive.
For limited third party distribution based on need and intended use.
- 151 -
All rights reserved. Errors and omissions excepted
© 2022 Synventive Molding Solutions

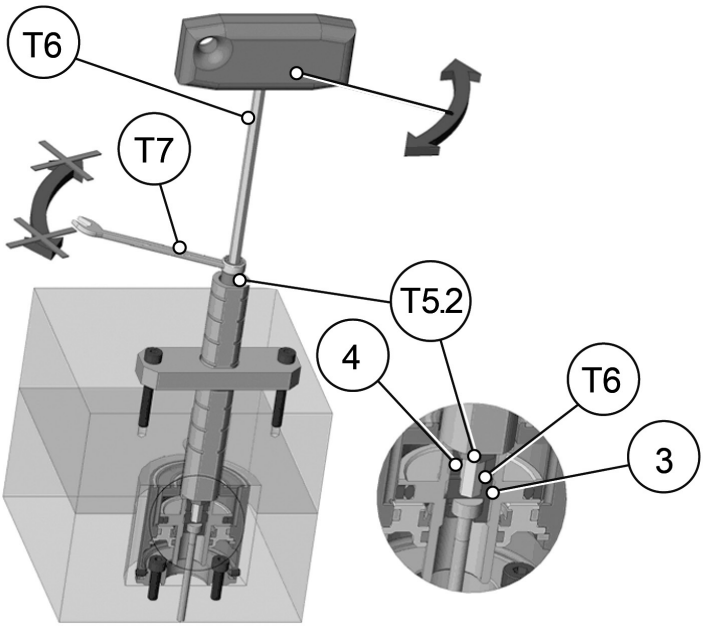

Doc003024.png

9) To adjust valve pin position:
   - Fix the lock screw (4) with the adjustment tool ATCYL2102 (T5.2) and a ring wrench (T7).
   - Turn the hanger screw (3) with the socket wrench (T6).

NOTICE

The screw pitch is 1 mm (right hand thread).



Doc003017.tif

NOTICE

The lock screw (4) has to be wraped with Teflon tape (2 layer).

After several adjustments replace the Teflon tape.

To fix the vale pin position:

10) Secure with the hexagon socket wrench (T6) the hanger screw (3) against turning.
11) Tighten the lock screw (4) with the assembly tool ATCYL2102 (T5.2) and a ring wrench (T7).

NOTICE

The reason to unscrew the hanger screw (3) would be for valve pin maintenance or replacement.

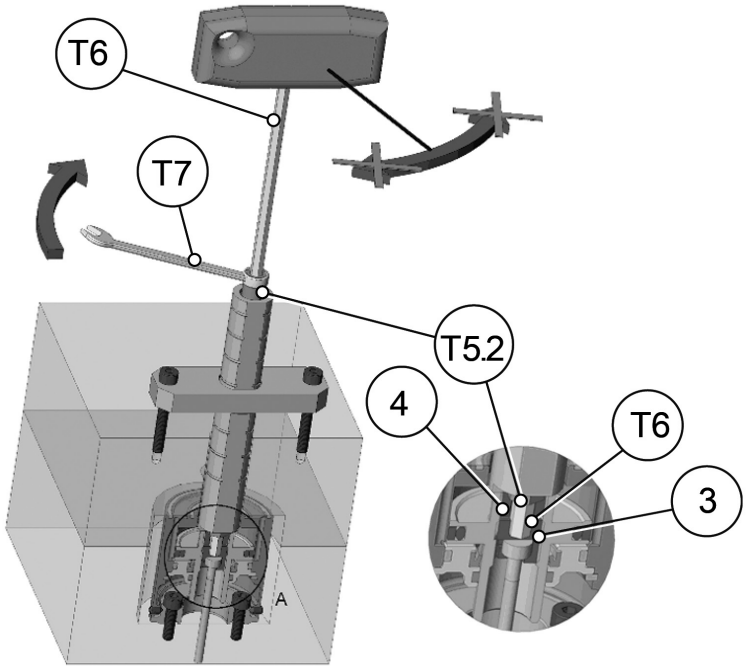

Doc003025.png

All rights reserved. Errors and omissions excepted
© 2022 Synventive Molding Solutions

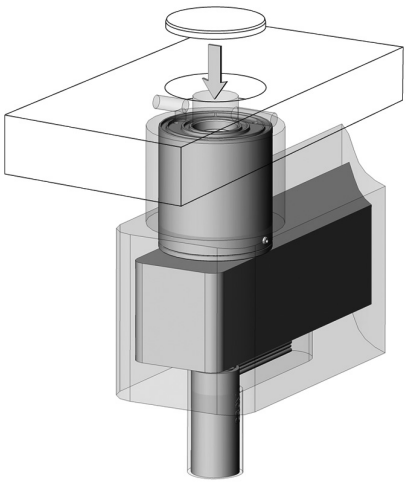

Doc003026.png

NOTICE

For the control of the valve pins, a pneumatic system is installed.

12) In case where the clamping plate has an opening for the valve pin adjustment, the opening must be capped airtight.