RS25J500DSR

25 cu. ft. Side-by-Side Refrigerator

SAMSUNG



Installing Your Refrigerator

1. Measure the height, width and depth of the opening, making sure to include baseboards, molding tile, countertop overhang, etc. Check to be sure there is enough room to open the door (consider walls, islands or other obstacles when measuring).
2. Refer to illustration below to determine dimensions.
3. Allow 2.5" of clearance on hinge side of refrigerator when installing next to a wall where handle may make contact.
4. Allow 1" minimum clearance at rear for proper air circulation and water/electrical connections. Allow a 3/8" minimum clearance at sides and top for ease of installation.
5. Ensure each door and entryway in the home is wide enough for the refrigerator to be moved through easily.

For optimal usage and to be able to open refrigerator doors completely, do not install next to a wall.

Please note: The following dimension and cutout information is for planning purposes only. For complete installation details, consult manual packed with product, or download manual online at samsung.com.

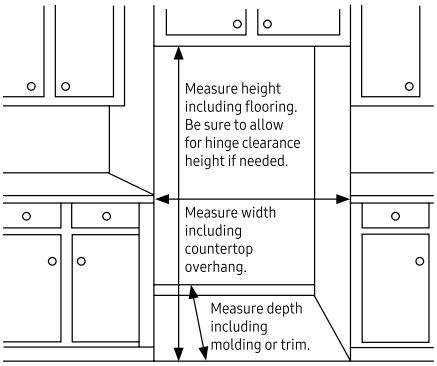

Dimensions

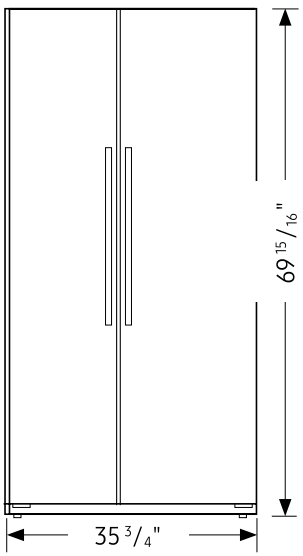

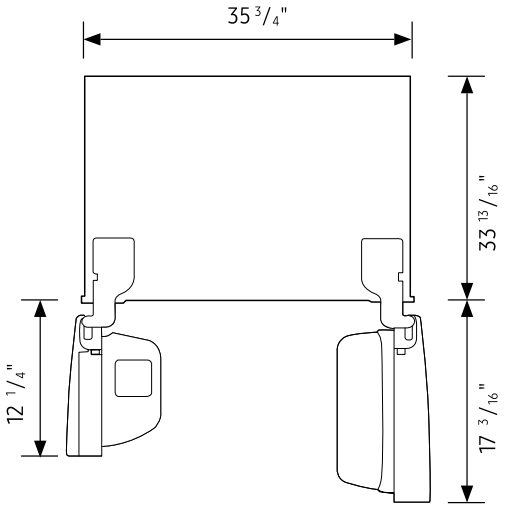

Actual color may vary. Design, specifications, and color availability are subject to change without notice. Non-metric weights and measurements are approximate.

©2016 Samsung Electronics America, Inc. 85 Challenger Road, Ridgefield Park, NJ 07660. Tel: 800-SAMSUNG. samsung.com. Samsung is a registered trademark of Samsung Electronics Co. Ltd.