VH210-A2-P0 SERIES

HD 2MP INTELLIGENT IP BOX CAMERA

Infinova®





FEATURES

- 1/2.8" progressive scan CMOS sensor
- IR-Cut Removable (ICR) Filter for true Day/Night
- Support multi-frame integrated WDR, with a range up to 120dB
- Support H.265/H.264/M-JPEG/SVC encoding formats, available with three video streams
- High-resolution image signal output: 1920×1080@30fps
- Smart H.265/Smart H.264 available for efficient use of band resources
- Support vivid smart functions such as video anomaly detection, behaviour-analysis detection, sound detection, statistics detection, Intelligent grouping detection and Face capture grouping is integrated mask recognition function
- Bi-directional audio, G.711-A/G.711-U/AAC
- Local PC recording
- Micro SD card
- Up to 8 ROI (Region of Interest) areas
- Up to 4 definable privacy mask areas
- Support corridor mode
- Support simultaneous access and parameter setting via Web Server from multiple clients
- ONVIF Profile S/G/T compliant
- PoE/12VDC/24VAC

Copyright © 1993-2022 Infinova. All rights reserved. Appearance and specifications are subject to change without prior notice.

DESCRIPTION

Infinova VH210-A2-P0 Series HD 2MP Intelligent IP Box Camera applies 1/2.8-inch CMOS sensor. With H.265/H.264/M-JPEG/SVC video compression formats and three-stream encoding, the camera can output high-quality images with resolution up to 1080P@30fps, providing marvelous definition, color restoration and more accurate image details.

The product adopts self-developed deep-learning algorithm and supports various smart analysis functions, including video exception detection, face detection, counting, crowd density detection and behavior analysis etc. Thus, the camera is applicable for various high-end commercial applications.

The camera can be widely used in banks, schools, buildings, communities, squares, streets, stations, bars, parks and other occasions requiring high-quality images.

TECHNICAL SPECIFICATIONS

Lens (Visible)	
Image Sensor	1/2.8" progressive scan CMOS
Optical Zoom	-
Digital Zoom	-
Focal Length	-
Iris	DC drive, F1.8
Focus	Available with online assistant focus
FOV(H/V/D)	H:53.2°-18.6°; V:104°-33.2°; D:123.2°-38°
Lens Mount	C/CS
Lens (Thermal)	
Imager Type	-
Lens Type	-
Spectral Band	-
Pixel Size	-
NETD	-
Focal Length	-
FOV	-
Video	
Camera Resolution (Visible Lens)	2MP
Camera Resolution (Thermal Lens)	-
Max. Coding Capacity (Visible Lens)	Major stream: H.264/H.265- 30fps@1920x1080 Minor stream: H.264/H.265- 30fps@1280×720 Third stream: M-JPEG- 30fps@1920x1080
Max. Coding Capacity (Thermal Lens)	-
Data Rate	VBR/CBR Major stream: 128Kbps~10,240Kbps; Minor stream: 128Kbps~4,096Kbps
Video Compression	H.265/H.264/ M-JPEG/SVC independent coding
Multi-Streaming	Three - stream independent output
Video Rotation	Video can be rotated by 90°, 180° or 270°
Audio	
Audio Compression	G.711-A/ G.711-U/ AAC
Sample Rate	8KHz (for G.711-A/G.711-U), 16KHz, 32KHz, 44.1KHz and 48KHz (for AAC)
Audio Interface	1 input, Linear level; 1 output, Linear level
Two-way Audio	Available
Mic & Speaker	-
Image	
Shutter	Auto/Manual (1/1s~1/32,000s)
WDR	Up to 120dB

Exposure	Auto/Manual/Shutter
Sensitivity	Color mode: 0.005Lux (AGC ON); B/W mode: 0.0005Lux (AGC ON)
White Balance	Auto/Manual/Outdoor
Video Adjustment	Brightness, contrast, saturation, hue, sharpness
Noise Reduction	3D
S/N Ratio	≥55dB
Defog	Available
EIS	Available
Mirror	Horizontal/Vertical
Corridor Mode	Available
Day/Night Switching	ICR
AGC	Auto/Manual, up to 64X
BLC	Available
HLC	Available
Privacy Mask	Up to 4 definable zones
ROI	Up to 8 definable zones
OSD	Supported
Pan/Tilt Functions	
Preset	-
Pattern	-
Autopan	-
Normal Tour	-
Home Return	-
Timing Tour	-
Autoscan	-
Area Zoom	-
IR Illumination	
Smart-IR	-
Wave Length	-
Night Vision Distance	-
Temperature Measurement	
Screening	-
Function	-
Measurement	-
Measurement Distance	-
Measurement Range	-
Accuracy	-
Screening	-
Function	-

Copyright © 1993-2022 Infinova. All rights reserved. Appearance and specifications are subject to change without prior notice.

TECHNICAL SPECIFICATIONS

Smart Analytics	
Video Analytics	Video Anomaly Detection-Camera tampering, camera shifting, defocus detection, high brightness detection, low brightness detection, video loss detection, color cast detection, and motion detection Behaviour Analysis Detection - Wire crossing detection, intrusion detection, object abandoned detection, object lost detection, loitering detection, crowd detection, fast moving detection, target stop detection, and fall over detection Sound Detection - Abnormal sound detection and fight detection Statistics Detection - Counting, density detection, queue length detection and dwelling detection Intelligent Grouping Detection- Behaviour analysis grouping, face capture grouping. Face capture - Supports face detection, tracking and capturing. Optimum Selection- Supports optimum selection and duplicate removal for captured target images to deliver the best-quality images. Face Exposure - Available Face attributes - gender, glasses, eyes open, mask, mouth open
Storage	
Storage Slots	Support single card
Built-in Storage	up to 512GB
NAS Storage	-
Local PC Recording	Available
Alarm	
Alarm Ports	2 alarm inputs, 1 on-off output
Alarm Input	I/O input, smart detection, SD card removal, SD card full of videos, SD card full of images, network disconnection, and heartbeat loss
Alarm Association	I/O output, email, image upload via FTP, image upload via HTTP, SD card snapshot, SD card recording, and alarm info push
System Functions	
Operating System	Win 7 and higher versions
Browser	IE8 and higher versions
Access Protocol	ONVIF Profile S/G/T, Infinova CGI
Multiple Access	Up to 20-ch simultaneous access
Web Server	Available
Remote Upgrade	Available

Password Protection	Available
RS485 Port	Available
Analog Video Output	-
Maximum Number of Users	64, with 3 types of users available: administrator, normal user, and operator
Wiper	-
Network	
Network Interface	1 RJ45 10M/ 100M self-adaptive Ethernet port
Network Protocols	IPv4/IPv6, TCP, UDP, IGMP, ICMP, IGMPv2/3, DHCP, SNMP (V1, V3), FTP, SMTP, NTP, RTC, RTP, RTSP, RTCP, HTTP, HTTPS, SSL, 802.1x, QoS, PPPoE, DNS, DDNS, ARP, UPnP, IP Filter, TLS, AES, DES, Multicast
IP Address Filtering	Available
Network Delay	≤200ms
Environmental	
Anti-Static	Air discharge: 8KV, contact discharge: 6KV
Surge Protection	Difference mode: ±1KV, common mode: ±2KV
Operating Temperature	-4°F~140°F (-20°C~+60°C)
Storage Temperature	-4°F~158°F (-20°C~+70°C)
Operating Humidity	≤ 95% RH Non condensing
Environmental Rating	-
Impact Resistance	-
Mechanical	
Manual Speed	-
Preset Speed	-
Rotation Angle	-
Preset Accuracy	-
Electric Motor	-
Electrical	
Power Supply	PoE (IEEE 802.3af Class 2) /12VDC /24VAC
Power Consumption	<7W
Physical	
Product Dimension (L×W×H) or (H x D)	5.66"×2.88"× 2.52" (143.8mm×73.2mm× 64mm)
Package Dimension (L x W x H)	8.07"x4.92"x3.94" (205mm×125mm×100mm)
Unit Weight	0.79lbs. (0.36kg)
Shipping Weight	1.01lbs. (0.46kg)
Certifications	
Product Certifications	CE; FCC; RoHS

ORDERING INFORMATION

VH210-A2-P0	HD Megapixel Intelligent WDR IR IP Box Camera, 2MP, 1/2.8" CMOS, Mask recognition, Day/night, H.265/H.264/M-JPEG/SVC, With audio alarm, PoE/12VDC/24VAC
Accessories	
Lens	
V1182-0550-B3RY	Lens, 2MP, 1/2.7", f=5-50mm, F/1.4, CS Mount, DC auto iris
V1182-2812-B3RY	Lens, 2MP, 1/2.7", f=2.8-12mm, F/1.6, CS Mount, DC auto iris
V1182-2812-B5R	Lens, 5MP, 1/2.7", f=2.8-12mm, F/1.6, CS Mount, DC auto iris

Copyright © 1993-2022 Infinova. All rights reserved. Appearance and specifications are subject to change without prior notice.

Housing	
V1405-10	Camera housing, indoor/outdoor, 10 inch internal
V1405-10S	Camera housing, indoor/outdoor, 10 inch internal, w/ sun shield
V1405-10SHB	Camera housing, indoor/outdoor, 10 inch internal, w/ sun shield, heater & blower, 24VAC
V1405-11SHB	Camera housing, indoor/outdoor, 11 inch internal, w/ sun shield, heater & blower, 24VAC
V1406-11SHB	Camera housing, indoor/outdoor, 11 inch internal, pneumatic supporting lid, w/ sun shield, heater & blower, 24VAC
V1406-11SHB + V1406W	Camera housing, indoor/outdoor, 11 inch internal, pneumatic supporting lid, w/ sun shield, heater & blower, 24VAC + Wiper for V1406 camera housing, 24VAC
V1405-11SHB-IR-1	IR Camera housing, indoor/outdoor, 11 inch internal, pneumatic supporting lid, w/ sun shield, heater & blower, 15°, 120m, 24VAC
V1405-11SHB-IR-2	IR Camera housing, indoor/outdoor, 11 inch internal, pneumatic supporting lid, w/ sun shield, heater & blower, 30°, 100m, 24VAC
V1405-11SHB-IR-3	IR Camera housing, indoor/outdoor, 11 inch internal, pneumatic supporting lid, w/ sun shield, heater & blower, 45°, 70m, 24VAC
V1405-11SHB-IR-4	IR Camera housing, indoor/outdoor, 11 inch internal, pneumatic supporting lid, w/ sun shield, heater & blower, 60°, 50m, 24VAC
Housing Bracket	
V1571-W	Wall Mount, H/V adjustable for housing (V1405), 33.07 lbs (15 kg) load
V1572-W	Wall Mount, Non - Adjustable for housing (V1405, V1406, V1407), 121.25 lbs. (55 kg) load
V1573	Wall Mount, H/V adjustability for housing (V1405, V1406, V1407), 44.09 lbs (20 kg) load
V1573-2	Wall Mount, H/V adjustability for housing (V1405, V1406, V1407), 44.09 lbs (20 kg) load
V1573-A	Wall Mount, H/V adjustability for housing (V1405-11SHB-IR), 88.19 lbs. (40 kg) load, Cable Management
Power Supply	
N3921-12D-1	AC to DC Power Supply, Plug-In, 230VAC, Output 12VDC, 1.5A
N3922-24A-2	AC to AC Power Supply, Plug-In, 230VAC, Output 24VAC, 3A
N3922-30P-2	Smart POE Injector, 100VAC-240VAC input, 30W output

DIMENSIONS

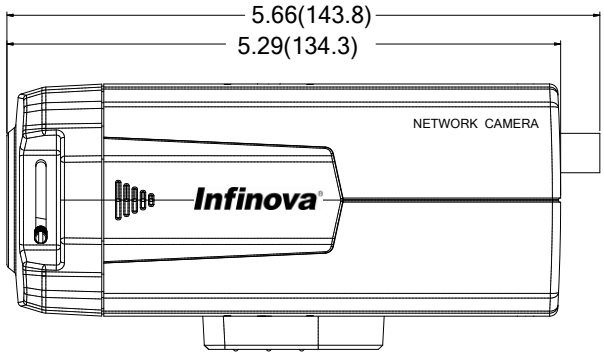

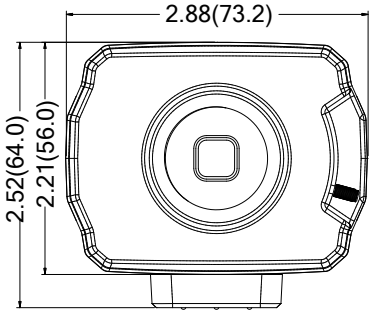

(Unit: inch, in the parentheses is mm)

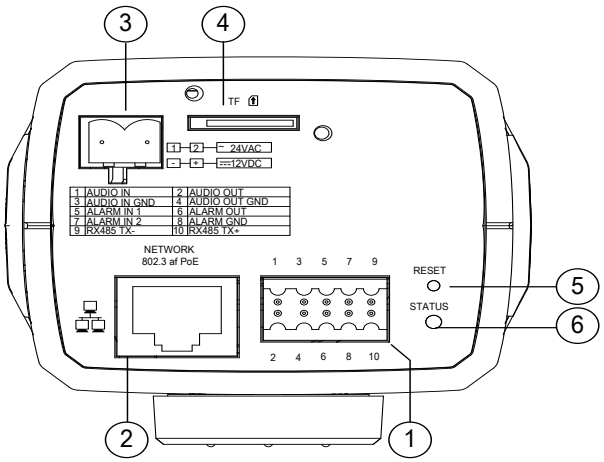

① Input/ Output Port
② Network Port (PoE option)
③ Power Input Port
④ Micro SD card slot
⑤ Reset
⑥ Status Indicator

Pin Assignment of ① Input / Output Port

1	Audio In	2	Audio Out
3	Audio Input GND	4	Audio Input GND
5	Alarm In 1	6	Alarm Out
7	Alarm In 2	8	Alarm Out Com
9	RS485TX-	10	RS485TX+

Copyright © 1993-2022 Infinova. All rights reserved. Appearance and specifications are subject to change without prior notice.