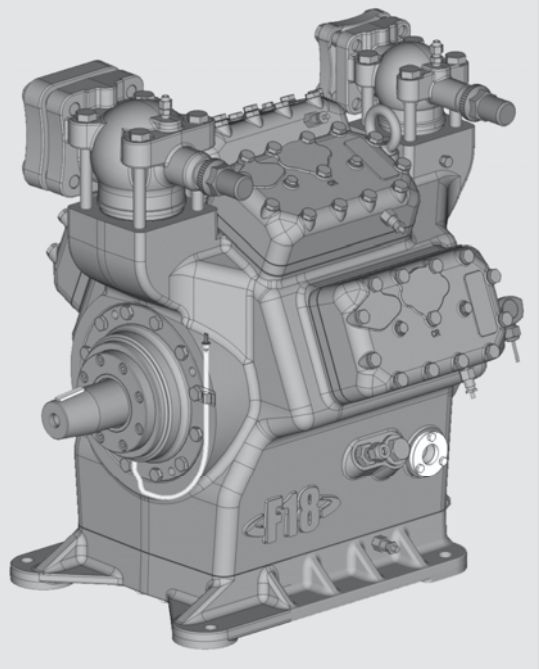

Bock Compressor F18

Assembly instructions

F18/2735
F18/3235
FX18/2735
FX18/3235

engineering for a better world

GEA Refrigeration Technologies

About these instructions

Read these instructions before assembly and before using the compressor. This will avoid misunderstandings and prevent damage. Improper assembly and use of the compressor can lead to serious or fatal injury.
Observe the safety instructions contained in these instructions.
These instructions must be passed onto the end customer along with the unit in which the compressor is installed.

Manufacturer

GEA Bock GmbH
72636 Frickenhausen

Contact

GEA Bock GmbH
Benzstraße 7
72636 Frickenhausen
Germany

GB

Telephone +49 7022 9454 0
Fax +49 7022 9454-137
bock@gea.com
www.bock.de

96246-12.2013-DGbRu

Contents

Page

1	**Safety**	**4**
1.1	Identification of safety instructions	
1.2	Qualifications required of personnel	
1.3	Safety instructions	
1.4	Intended use	
2	**Product description**	**6**
2.1	Short description	
2.2	Name plate	
2.3	Type code	
3	**Areas of application**	**8**
3.1	Refrigerants	
3.2	Oil charge	
3.3	Operating limits	
4	**Compressor assembly**	**10**
4.1	Setting up	
4.2	Maximum permissible inclination	
4.3	Pipe connections	
4.4	Pipes	
4.5	Laying suction and discharge lines	
4.6	Operating the shut-off valves	
4.7	Operating mode of the lockable service connections	
4.8	Drive	
4.9	Oil sump heating	
5	**Commissioning**	**16**
5.1	Preparations for start-up	
5.2	Pressure resistance test	
5.3	Leak test	
5.4	Evacuation	
5.5	Refrigerant charge	
5.6	Shaft seal	
5.7	Shaft seal change	
5.8	Start-up	
5.9	Avoiding slugging	
6	**Maintenance**	**19**
6.1	Preparation	
6.2	Work to be carried out	
6.3	Spare parts recommendation	
6.4	Accessories	
6.5	Excerpt from the lubricant table	
6.6	Decommissioning	
7	**Accessories**	**21**
7.1	Capacity controller	
8	**Technical data**	**21**
9	**Dimensions and connections**	**22**
10	**Declaration of installation**	**24**
11	**Service**	**25**

GB

96246-12.2013-DGbRu

1 | Safety

1.1 Identification of safety instructions:

	**DANGER**	**Indicates a dangerous situation which, if not avoided, will cause immediate fatal or serious injury.**
	**WARNING**	**Indicates a dangerous situation which, if not avoided, may cause fatal or serious injury.**
	**CAUTION**	**Indicates a dangerous situation which, if not avoided, may cause fairly severe or minor injury.**
	**ATTENTION**	**Indicates a situation which, if not avoided, may cause property damage.**
	**INFO**	**Important information or tips on simplifying work.**

GB

1.2 Qualifications required of personnel

	**WARNING**	**Inadequately qualified personnel poses the risk of accidents, the consequence being serious or fatal injury. Work on compressors is therefore reserved for personnel which is qualified to work on pressurized refrigerant systems:** • For example, a refrigeration technician, refrigeration mechatronic engineer. As well as professions with comparable training, which enables personnel to assemble, install, maintain and repair refrigeration and air-conditioning systems. Personnel must be capable of assessing the work to be carried out and recognising any potential dangers.

96246-12.2013-DGbRu

1.3 Safety instructions



WARNING **Risk of accidents.**
Refrigerating compressors are pressurised machines and as such call for heightened caution and care in handling.

The maximum permissible overpressure must not be exceeded, even for testing purposes.

Risk of burns!
- **Depending on the operating conditions, surface temperatures of over 60°C on the discharge side or below 0°C on the suction side can be reached.**
- **Avoid contact with refrigerant necessarily. Contact with refrigerant can cause severe burns and skin damage.**

1.4 Intended use



WARNING **The compressor may not be used in potentially explosive environments!**

GB

These assembly instructions describe the standard version of the compressor named in the title manufactured by Bock. Bock refrigerating compressors are intended for installation in a machine (within the EU according to the EU Directives 2006/42/EC Machinery Directive, 97/23/EC Pressure Equipment Directive).
Commissioning is permissible only if the compressor has been installed in accordance with these assembly instructions and the entire system into which it is integrated has been inspected and approved in accordance with legal regulations.

Only the refrigerant specified in these instructions may be used.

Any other use of the compressor is prohibited!

96246-12.2013-DGbRu

2 | Product description

2.1 Short description

- 8-cylinder open type compressor for external drive (V-belt or coupling)
- with oil pump lubrication

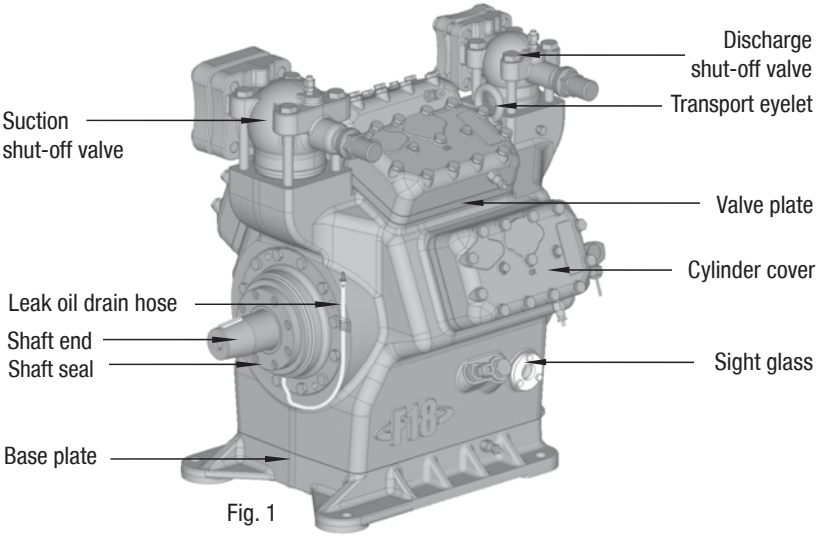

Fig. 1

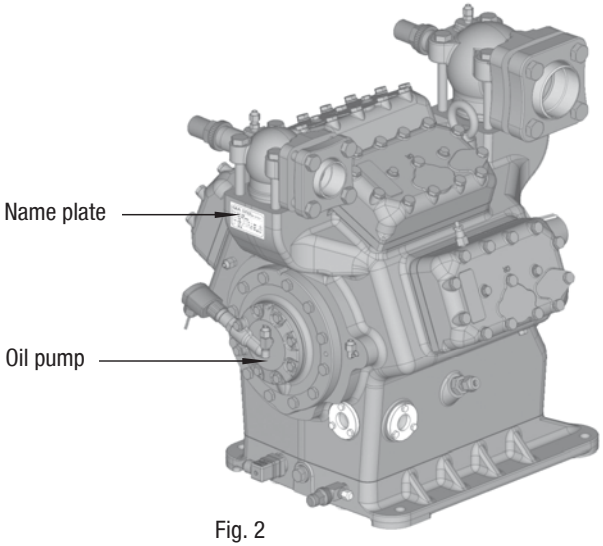

Fig. 2

Dimension and connection values can be found in Chapter 8.

GB

96246-12.2013-DGbRu

2.2 **Name plate** (example)

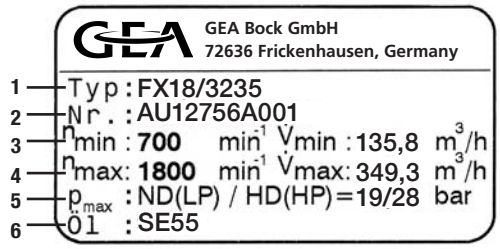

Fig. 3

1	Type designation
2	Machine number
3	Rotation speed minimum with a corresponding displacement
4	Rotation speed maximum with a corresponding displacement
5	ND(LP): Max. admissible operating pressure Suction side HD(HP): Max. admissible operating pressure High-pressure side **Observe the limit of application diagrams!**
6	Oil type charged at factory

GB

2.3 **Type code** (example)

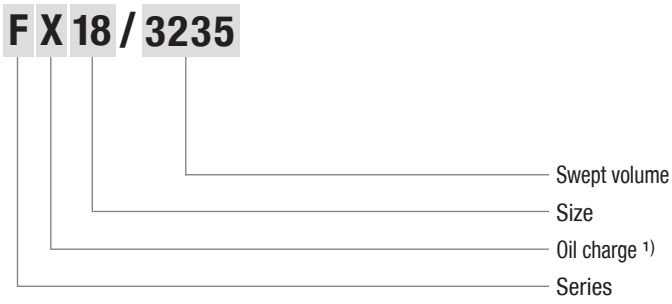

1) X - Ester oil charge (HFC refrigerant R134a, R404A/R507, R407C)

3 | Areas of application

3.1 Refrigerants

- HFKW / HFC: R134a, R404A/R507, R407C
- (H)FCKW / (H)CFC: R22

3.2 Oil charge

- The compressors are filled with the following oil type at the factory:
  - for R134a, R404A/R507, R407C FUCHS Reniso Triton SE 55
  - for R22 FUCHS Reniso SP 46

Compressors with ester oil charge (FUCHS Reniso Triton SE 55) are marked with an X in the type designation (e.g. F**X**18/3235).

INFO **For refilling, we recommend the above oil types. Alternatives: see lubricants table, Chapter 6.4**

ATTENTION **The correct oil level is shown in Figure 4. Damage to the compressor is possible if overfilled or underfilled!**

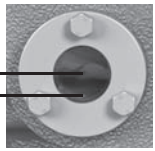

Fig. 4

GB

3.3 Operating limits

ATTENTION **Compressor operation is possible within the operating limits shown in the diagrams. Please note the significance of the shaded areas. Thresholds should not be selected as design or continuous operating points.**
- **Max. permissible discharge end temperature: 140°C**
- **Max.permissible switching frequency: Please refer to the instructions of the engine manufacturer.**
- **A minimum running time of 3 min. steady-state condition (continuous operation) must be achieved.**

Avoid continuous operation near the threshold.

For operation with supplementary cooling:
- **Use only oils with high thermal stability.**

For operation with capacity regulator:
- **The suction gas superheat temperature may need to be reduced or set individually when operating near to the threshold.**

When operating in the vacuum range, there is a danger of air entering on the suction side. This can cause chemical reactions, a pressure rise in the condenser and an elevated compressed-gas temperature. Prevent the ingress of air at all costs!

96246-12.2013-DGbRu

3.3 Operating limits

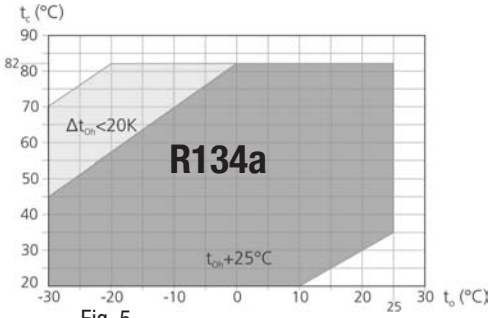

Fig. 5

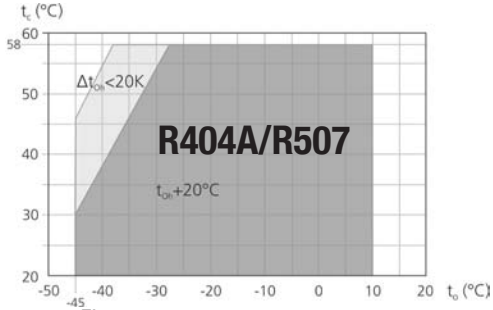

Fig. 6

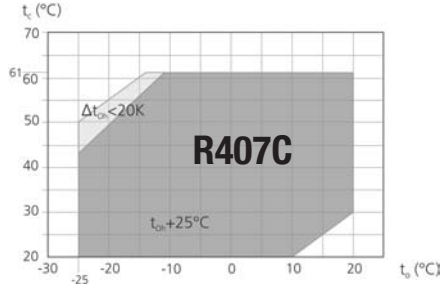

Fig. 7

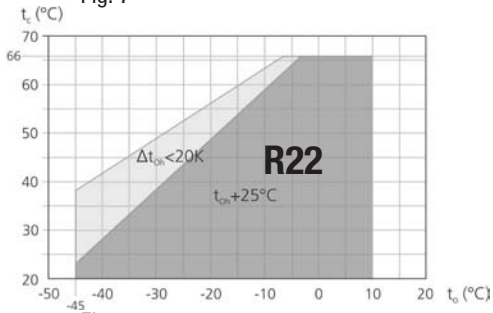

Fig. 8

Unlimited application range

Reduced suction gas temperature

t_o Evaporating temperature (°C)

t_c Condensing temperature (°C)

Δt_{oh} Suction gas superheat (K)

t_{oh} Suction gas temperature (°C)

Permissible rotation speeds:
700 - 1800 rpm

Maximum permissible operating pressure (LP/HP)[1]: 19/28 bar

[1] LP = Low pressure
HP = High pressure

Design for other areas on request

GB

4| Compressor assembly

INFO **New compressors are factory-filled with inert gas (3 bar nitrogen). Leave this service charge in the compressor for as long as possible and prevent the ingress of air. Check the compressor for transport damage before starting any work.**

4.1 Setting up

WARNING **Risk of injury.**
Move compressors only with hoists that have adequate load-bearing capacity.

- Transport and suspension unit on the eyebolt (Fig. 8).

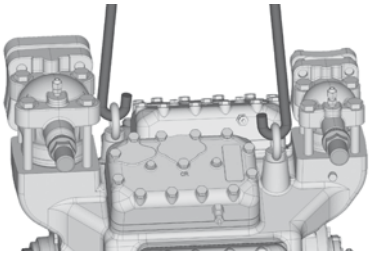

Fig. 9

- Fittings (e.g. pipe holders, additional units etc.) on the compressor are permissible only following consultation with Bock.
- Setup on an even surface or frame with sufficient load-bearing capacity. Use all 4 fastening points.
- Correct setup of the compressor and mounting of the belt drive are decisive for running comfort, operating safety and the service life of the compressor.

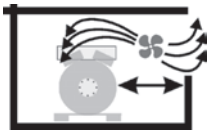

Fig. 10

- Provide adequate clearance for maintenance work.
- Provide adequate ventilation for the drive motor.



Fig. 11

- Do not use in a dusty, damp atmosphere or a combustible environment.

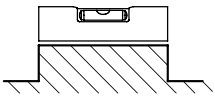

Fig. 12

- Set up on an even surface or frame with sufficient load-bearing capacity.
- Compressors and drive motors are basically rigid and should be mounted together on a base frame.

GB

96246-12.2013-DGbRu

4.2 Maximum permissible inclination

ATTENTION **Risk of compressor damage.**
Poor lubrication can damage the compressor.
Respect the stated values.

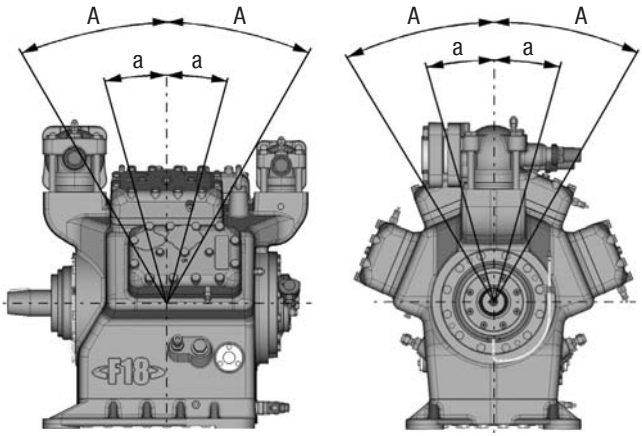

A	max. 30°, max. 2 minutes
a	max. 15°, continuous operation

Fig. 13

4.3 Pipe connections

ATTENTION **Risk of damages.**
Overheating can damage the valve.
Remove the pipe supports from the valve for soldering.
Only solder using inert gas to inhibit oxidation products (scale).

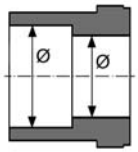

Fig. 14: stepped internal diameters

- The **pipe connections** have stepped internal diameters so that pipes with standard millimetre and inch dimensions can be used.
- The connection diameters of the shut-off valves are designed for maximum compressor output. **The required pipe cross-section must be matched to the capacity. The same applies for non-return valves.**
- The required tightening torque for the flange connection is 60 Nm.

4.4 Pipes

- Pipes and system components must be clean and dry inside and free of scale, swarf and layers of rust and phosphate. Only use air-tight parts.
- Lay pipes correctly. Suitable vibration compensators must be provided to prevent pipes being cracked and broken by severe vibrations.
- Ensure a proper oil return.
- Keep pressure losses to an absolute minimum.

4.5 Laying suction and discharge lines

ATTENTION **Improperly installed pipes can cause cracks and tears, the result being a loss of refrigerant.**

INFO **Proper layout of the suction and discharge lines directly after the compressor is integral to the system's smooth running and vibration behaviour.**

A rule of thumb: Always lay the first pipe section starting from the shut-off valve **downwards and parallel to the drive shaft.**

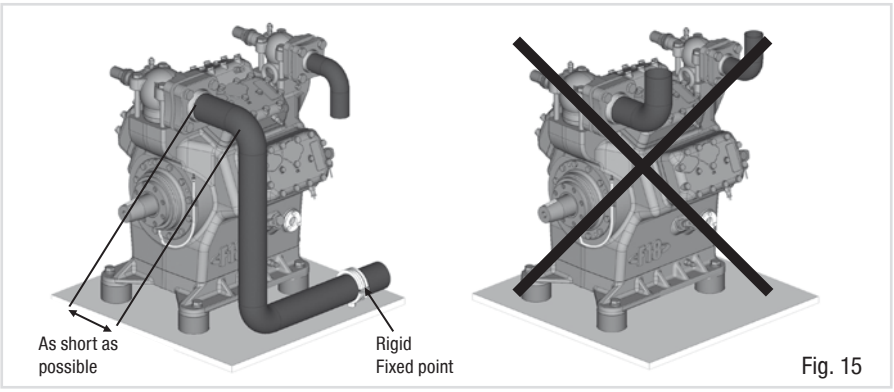

Fig. 15

GB

4.6 Operating the shut-off valves

- Before opening or closing the shut-off valve, release the valve spindle seal by approx. ¼ of a turn counter-clockwise.
- After activating the shut-off valve, re-tighten the adjustable valve spindle seal clockwise.

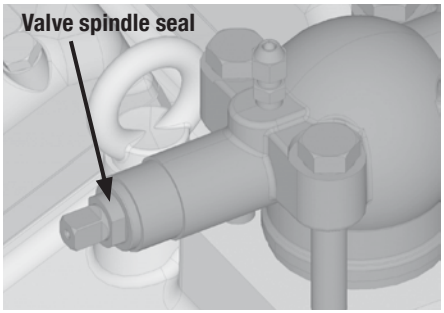

Fig. 16

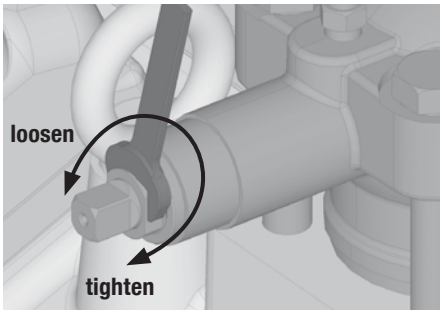

Fig. 17

4.7 Operating mode of the lockable service connections

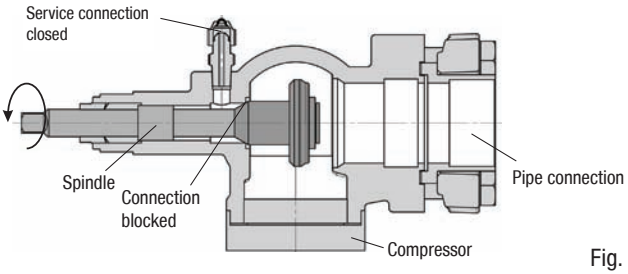

Fig. 18

Opening the shut-off valve:
Spindle: turn to the left (counter-clockwise) as far as it will go.
—> The shut-off valve is then fully open and the service connection is closed.

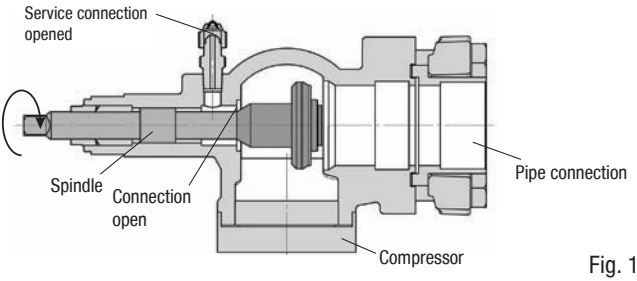

Fig. 19

Opening the service connection
Spindle: ½ - 1 rotation to the right (clockwise).
—> The service connection is then open and the shut-off valve is also open.

GB

4.8 Drive

CAUTION **Risk of injury.**
Mount suitable safeguards when driving the compressor by means of V-belts or shaft couplings!

ATTENTION **Faulty alignment results in premature failure of the coupling and bearing damage!**

The compressors can be driven by V-belts or directly by shaft couplings.

V-belt:

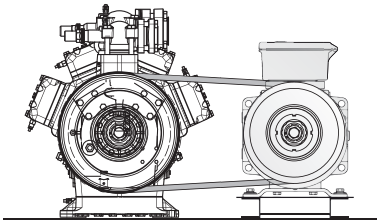

Fig. 20 (schematical)

GB

- Proper assembly of belt drive:
  - The pulleys of compressor and drive motor must be firmly mounted and in line.
  - Only use V-belts with calibrated lengths.
  - Select axis spacing, V-belt length and belt pre-tension according to the instructions issued by the V-belt manufacturer. Avoid belt fluttering.
  - Check belt pre-tension after running-in time.
  - Maximum permissible axle load due to belt tension force: 9500 N.

Direct drive with shaft coupling:

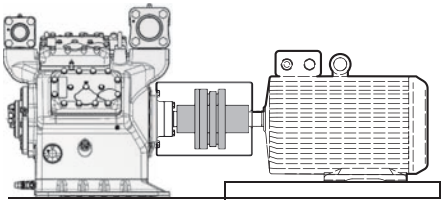

Fig. 21 (schematical)

- Direct drive with shaft couplings demands highly precise aligning of compressor shaft and motor shaft.
  GEA Bock recommends the direct drive with centering a coupling housing (accessory).

96246-12.2013-DGbRu

4.9 **Oil sump heating** (accessory)

When the compressor is at a standstill, refrigerant diffuses into the lubrication oil of the compressor housing, depending on pressure and ambient temperature. This reduces the lubrication capacity of the oil. When the compressor starts up, the refrigerant contained in the oil evaporates out through the reduction in pressure. The consepuences can be lack of lubrication, foaming and migration of the oil, which can eventually lead to compressor damage.

To prevent this, the oil can be heated via an oil sump heater.



ATTENTION **The oil sump heater must work even if a system failure occurs. Therefore the oil sump heater must not be connected to the electrical circuit of the safety control chain!**

Operation: Oil sump heater ON at standstill of the compressor.
Oil sump heater OFF during operation of the compressor

Connection: Oil sump heater must be connected via an auxiliary contact (or parallel wired auxiliary contact) of the motor contactor to a separate electric circuit.

Electrical data: 230 V - 1 - 50/60 Hz, 200 W.

GB

5| Commissioning

5.1 Preparations for start-up

INFO **To protect the compressor against inadmissible operating conditions, high pressure and low pressure pressostats are mandatory on the installation side.**

The compressor has undergone trials in the factory and all functions have been tested. There are therefore no special running-in instructions.

Check the compressor for transport damage!

5.2 Pressure strength test

DANGER **Risk of bursting!**
The compressor must only be pressurised using nitrogen (N_2). Never pressurise with oxygen or other gases!
The maximum permissible overpressure of the compressor must not be exceeded at any time during the testing process (see name plate data)! Do not mix any refrigerant with the nitrogen as this could cause the ignition limit to shift into the critical range.

GB

The compressor has been factory-tested for pressure resistance. The following must be observed if the entire plant is subjected to an additional pressure strength test:

- Test the refrigeration circuit according to EN 378-2 or a corresponding safety standard.

5.3 Leak test

DANGER **Risk of bursting!**
Do not mix any refrigerant with the nitrogen (N_2) as this could cause the ignition limit to shift into the critical range.

- Carry out the leak test of the refrigerating system in accordance with EN 378-2 or a corresponding safety standard **without including the compressor.**

5.4 Evacuation

- First evacuate the **system** and then include **the compressor in the evacuation process.**
- Relieve the compressor pressure.
- Open the suction and pressure line shut-off valves.
- Evacuate the suction and discharge pressure sides using the vacuum pump.
- At the end of the evacuation process, the vacuum should be < 1.5 mbar when the pump is switched off.
- Repeat this process as often as is required.

96246-12.2013-DGbRu

5.5 Refrigerant charge



CAUTION **Risk of injury!**
Contact with refrigerant can cause severe burns and skin damage. Avoid contact with refrigerant and wear personal protective clothing such as goggles and protective gloves!

- Make sure that the suction and discharge line valves are open.
- With the compressor switched off, add the liquid refrigerant directly to the condenser or receiver, breaking the vacuum.
- If the refrigerant needs topping up after starting the compressor, it can be topped up in vapour form on the suction side, or, taking suitable precautions, also in liquid form at the inlet to the evaporator.



ATTENTION
- **Avoid overfilling the system with refrigerant!**
- **To avoid shifts in concentration, zeotropic refrigerant blends must always only be filled into the refrigerating plant in liquid form.**
- **Do not pour liquid coolant through the suction line valve on the compressor.**
- **It is not permissible to mix additives with the oil and refrigerant.**

GB

5.6 Shaft seal



ATTENTION **Failure to observe the following instructions can cause loss of refrigerant and damage to the shaft seal!**



INFO
The shaft seal lubricates and seals with oil. An oil leakage of 0.05 ml per operating hour is therefore normal. This applies particularly during the run-in phase (200 - 300 h).

The compressor is equipped with an integrated leak oil drain hose. Through a drain hose leak oil can be drained.

Dispose of the leak oil in accordance with the valid national regulations.

The compressor shaft is sealed to outside using a shaft seal. The sealing element rotates with the shaft.
The following is especially important to ensuring fault-free operation:
- The complete refrigerant circuit must be correctly executed and clean inside.
- Heavy shocks and vibrations to the shaft as well as continuous cyclic operation are to be avoided.
- The sealing surfaces can stick together during prolonged downtimes (e.g. winter). Therefore, run the system every 4 weeks for 10 minutes.

5.7 Shaft seal change

As changing the shaft seal involves opening the refrigerant circuit, this is recommended only if the seal is losing refrigerant. Replacing the shaft seal is described in the spare part kit concerned.

5.8 Start-up



WARNING **Ensure that both shut-off valves are open before starting the compressor!**

- Check that the safety and protection devices (pressure switch, motor protection, electrical contact protection measures, etc.) are all functioning properly.
- Switch on the compressor and allow to run for a minimum of 10 min.
- **Check the oil level by**: The oil must be visible in the sightglass.



ATTENTION **If larger quantities of oil have to be topped up, there is a risk of oil hammer effects.**
If this is the case check the oil return!

GB

5.9 Avoiding slugging



ATTENTION **Slugging can damage the compressor and cause refrigerant to leak.**

To prevent slugging:

- The complete refrigeration system must be properly designed.
- All components must be compatibly rated with each other with regard to output (particularly the evaporator and expansion valves).
- Suction gas superheat at the compressor input **should be min. 7 - 10 K.** (check the setting of the expansion valve).
- The system must reach a state of equilibrium.
- Particularly in critical systems (e.g. several evaporator points), measures are recommended such as replacement of liquid traps, solenoid valve in the liquid line, etc.
  There should be no movement of coolant whatsoever while the compressor is at a standstill.

96246-12.2013-DGbRu

6| Maintenance

6.1 Preparation



WARNING **Before starting any work on the compressor:**

- **Switch off the compressor and secure it to prevent a restart.**
- **Relieve compressor of system pressure.**
- **Prevent air from infiltrating the system!**

After maintenance has been performed:

- **Connect safety switch.**
- **Evacuate compressor.**
- **Release switch lock.**

6.2 Work to be carried out

To guarantee optimum operating safety and service life of the compressor, **we recommend** performing service and checking work at regular intervals of time:

- **Oil change:**
  - In series plants produced in the factory not mandatory.
  - In field installations or operating in the application limit range, first oil change after approx. 100 - 200 operating hours, then approx. every 3 years or 10,000 - 12,000 operating hours. Dispose of old oil according to the regulations, observe national regulations.
- **Annual checks:** Oil level, tightness, running noise, pressures, temperatures, function of auxiliary devices such as a oil sump heater, pressure switch. Comply with the national regulations!

GB

6.3 Spare parts recommendation

F18 / ...	2735	3235
Designation	**Ref. No.**	**Ref. No.**
Set gaskets	80904	80905
Valve plate kit	80894	80895
Kit piston / connecting rod	80890	80891
Kit capacity regulator LR12	80889	80879
Oil pump kit	80116	
Kit shaft seal	80897	
Oil SP 46, 1 liter	02279	
Oil SE 55, 1 liter	02282	

Only use genuine Bock spare parts!

6.4 Accessories

Accessories available can be found on the Internet at www.bock.de.

96246-12.2013-DGbRu

6| Maintenance

6.5 Excerpt from the lubricant table

The oil grade filled as standard in the factory is noted on the **name plate. This oil grade should be used preferably.** Alternatives to this are listed in the following excerpt from our lubricant table.

Refrigerant	Bock series oil grades	Recommended alternatives
HFKW (e.g. R134a, R404A/R507, R407C)	**Fuchs Reniso Triton SE 55**	FUCHS Reniso Triton SEZ 32 ICI Emkarate RL 32 H, S MOBIL Arctic EAL 32 SHELL Clavus R 32
HFCKW (e.g. R22)	**Fuchs Reniso SP 46**	FUCHS Reniso, z.B. KM, HP, SP 32 SHELL Clavus SD 22-12 TEXACO Capella WF 46

Information on further suitable oils on request.

6.6 Decommissioning

Close the shut-off valves on the compressor. Drain the refrigerant (it must not be discharged into the environment) and dispose of it according to the regulations. When the compressor is depressurised, undo the fastening screws of the shut-off valves. Remove the compressor using an appropriate hoist. Dispose of the oil inside in accordance with the applicable national regulations.

GB

7| Accessories

7.1 Capacity regulator

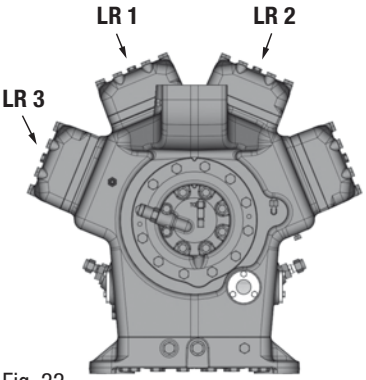

Fig. 22

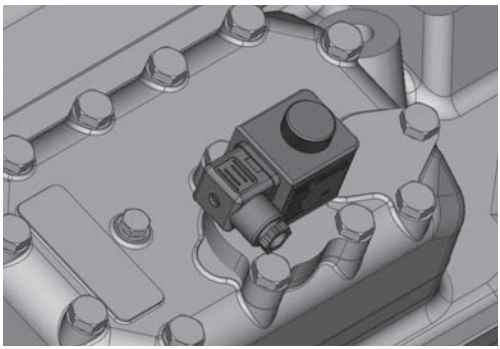

Screw in capacity regulator with sealing ring. Fig. 23
Torque: 50 Nm!

7| Accessories

WARNING! **Several capacity regulators cannot switch at the same time during compressor operation! Otherwise the sudden change in load can damage the compressor! Comply with the switching interval of 60 s.**

- Comply with the switching sequence:

Swiching on LR1 —— 60s ⟶ LR2 —— 60s ⟶ LR3

Swiching off LR3 —— 60s ⟶ LR2 —— 60s ⟶ LR1

ATTENTION

- **Capacity-regulated operation alters the gas speeds and pressure ratios of the refrigerating plant: Adjust the suction line routing and dimensioning accordingly, do not set the control intervals too close and do not let the system switch more than 12 times per hour (refrigerating plant must have reached a state of equilibrium). Continuous operation in the control stage is not recommended as the gas velocity in the plant system under certain circumstances does not guarantee sufficient oil return to the compressor with activated capacity regulator.**

  We recommend switching to unregulated operation (100% capacity) for at least 5 minutes per capacity-regulated operating hour. An assured oil return can also be realised by a 100% capacity requirement after each compressor restart.
- **Electrical actuation of the solenoid valve: Normally open, (corresponds to 100 % compressor capacity).**

GB

Special accessories are only premounted in the factory if ordered specially by customer. Retrofitting is possible in full compliance with the safety instructions and repair instructions enclosed with the kits. Information about the use, operation, maintenance and servicing of the components is available in the printed literature or on the internet under www.bock.de.

8| Technical data

Type	No. of cylinders	Displacement (1450/1740 rpm)	Weight	Connections [1]		Oil charge	Rotation speed range
				Discharge line DV	Suction line SV		
		m^3/h	kg	mm I inch	mm I inch	Ltr.	rpm
F18/2735	8	238 / 285	270	54 I 2 1/8	76 I 3 1/8	10,0	700-1800
F18/3235		281 / 338	270				

[1] for soldering joint

F18 F18/2735 F18/3235

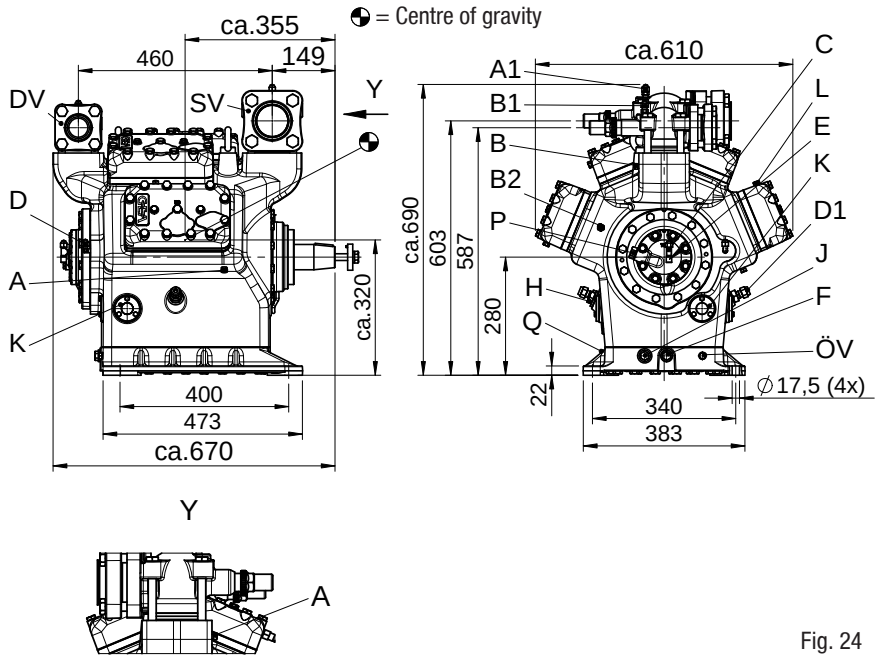

Fig. 24
Dimensions in mm

GB

Shaft end

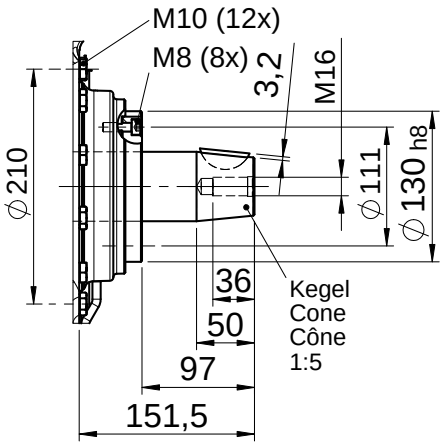

Fig. 25
Dimensions in mm

96246-12.2013-DGbRu

9| Dimensions and connections

SV **DV**	Suction line Discharge line see technical data, Chapter 7	
A	Connection suction side, not lockable	$^{1}/_{8}$“ NPTF
A1	Connection suction side, lockable	$^{7}/_{16}$“ UNF
A2	Connection suction side, not lockable	$^{1}/_{8}$“ NPTF
B	Connection discharge side, not lockable	$^{1}/_{8}$“ NPTF
B1	Connection discharge side, lockable	$^{7}/_{16}$“ UNF
B2	Connection discharge side, not lockable	$^{7}/_{16}$“ UNF
C	Connection oil pressure safety switch OIL	$^{7}/_{16}$“ UNF
D	Connection oil pressure safety switch LP	$^{7}/_{16}$“ UNF
D1	Connection oil return from oil separator	$^{5}/_{8}$“ UNF
E	Connection oil pressure gauge	$^{7}/_{16}$“ UNF
F	Oil drain plug	M22 x 1,5
H	Oil charge plug	M22 x 1,5
J	Connection oil sump heater	M22 x 1,5
K	Sight glass	3 hole M6
L	Connection thermal protection thermostat	$^{1}/_{8}$“ NPTF
ÖV	Connection oil service valve	$^{7}/_{16}$“ UNF
P	Connection differential oil pressure sensor	M20 x 1,5
Q	Connection oil temperature sensor	$^{1}/_{8}$“ NPTF

View X

- Oil sight glass
- Possibility to connect to oil level regulator

● Three-hole connection for oil level regulator make ESK, AC+R, CARLY (3x M6, 10 deep)

○ Three-hole connection for oil level regulator make TRAXOIL (3 x M6 x 10 deep)

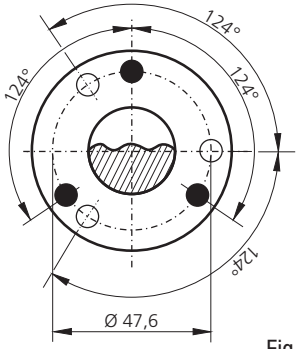

Fig. 26

GB

10| Declaration of installation

DECLARATION OF INSTALLATION

for using the compressors within the European Union
(in accordance with Machinery Directive 2006/42/EC)

The manufacturer: GEA Bock GmbH, Benzstraße 7
D-72636 Frickenhausen, Tel.: +49 7022/9454-0

hereby declares that the refrigerating compressor **F18** conforms to the essential requirements of Annex II 1B of the Machinery Directive 2006/42/EC.

Applied harmonised standard:

EN 12693:2008 and the corresponding standards referenced

A partly completed machine may only be put into operation, when it has been established that the machine, into which the partly completed machine is to be installed, conforms to the regulations of the Machinery Directive (2006/42/EC).

The manufacturer undertakes to transmit electronically the special documentation required by individual states for partly completed machinery upon request.

GB

The special technical documentation required for partly completed machinery has been created in accordance with Annex VII Part B.

Person responsible for documentation is:
Wolfgang Sandkötter, Benzstraße 7, 72636 Frickenhausen.



Frickenhausen, 04.09.2012

ppa. Wolfgang Sandkötter,
Chief Development Officer

96246-12.2013-DGbRu

11| Service

Dear customer,

Bock compressors are top-quality, reliable and service-friendly quality products.
If you have any questions about installation, operation and accessories, please contact our technical service or specialist wholesaler and/or our representative. The Bock service team can be contacted by phone with a **toll-free hotline 00 800 / 800 000 88** or via **e-mail: bock@gea.com.**

Yours faithfully

GEA Bock GmbH
Benzstraße 7
72636 Frickenhausen
Germany

We also provide information on the Internet at **www.bock.de**.
For example, under the "Documentation" link you will find:

- Technical information
- Product information
- Product brochures
- and much more

96246-12.2013-DGbRu

We live our values.

Excellence • Passion • Integrity • Responsibility • GEA-versity

GEA Group is a global engineering company with multi-billion euro sales and operations in more than 50 countries. Founded in 1881, the company is one of the largest providers of innovative equipment and process technology. GEA Group is listed in the STOXX® Europe 600 index.

GEA Refrigeration Technologies

GEA Bock GmbH

Benzstraße 7, 72636 Frickenhausen, Germany
Telephone: +49 7022 9454-0, Fax: +49 7022 9454-137
bock@gea.com, www.bock.de

96246-12.2013-DGbRu © GEA Group AG. All rights reserved.