COSTRUZIONI MECCANICHE DI PRECISIONE

EN





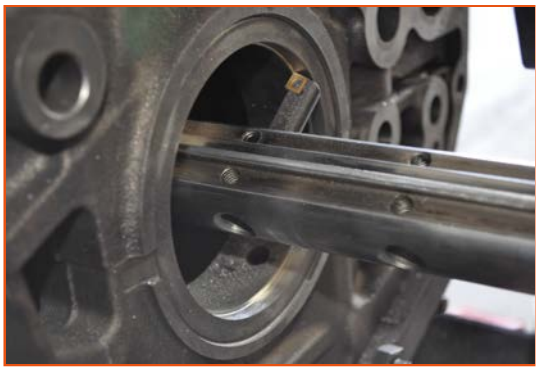

SUPERCOMBINATA Easy

PORTABLE LINE BORING AND ROTARY WELDING MACHINE

(from Ø 32 mm to Ø 250 mm)

The model **SUPERCOMBINATA Easy** has a **1800W - 2 geared motor** and its working range is from **Ø 32 mm** to **Ø 250 mm.**

Furthermore the **SUPERCOMBINATA Easy** can be equipped with additional accessories to make the following applications:

- BORING
- FLANGE FACING
- SEEGER CIRCLIPS

Elsa's range of Line Boring & Rotary Welding Machines are compatible with any MIG/MAG power source with an Euro connection.

EXTRA KITS

Code	Description
Kit for Line Boring	
KEP00187	Ø 22 mm - Ø 50 mm
Kit allows the end user to Flange Face	
KES00186	Ø 45 mm - Ø 160 mm
KES00189	Ø 45 mm - Ø 260 mm
KES00200	Ø 80 mm - Ø 240 mm
KES30023	Ø 80 mm - Ø 160 mm (KIT FOR CIRCLIP GROOVES)
KES30024	Ø 100 mm - Ø 250 mm (KIT FOR CIRCLIP GROOVES)

ACCESSORIES

Code	Description
AE000643	DIGITAL CONTROL PANEL
AE000487	JOINT FOR BORING BAR (A) Ø 40 mm
AE000488	JOINT FOR BORING BAR (B) Ø 40 mm
AE030015	SISTEMA CAM
AE003018	BORING BAR Ø 40 X 1500 mm
AE003017	BORING BAR Ø 40 X 3000 mm

Elsa S.r.l. Località La Petrizia - S.S. 106 88050, Sellia Marina (Cz) - Italia
Tel: (+39) 0961 962854 - Fax: (+39) 0961 968716 - elsasrl@elsasrl.com

WWW.ELSASRL.COM

Rev. JULY 2013

COSTRUZIONI MECCANICHE DI PRECISIONE

EN

SUPERCOMBINATA Easy

PORTABLE LINE BORING AND ROTARY WELDING MACHINE

(from Ø 32 mm to Ø 250 mm)

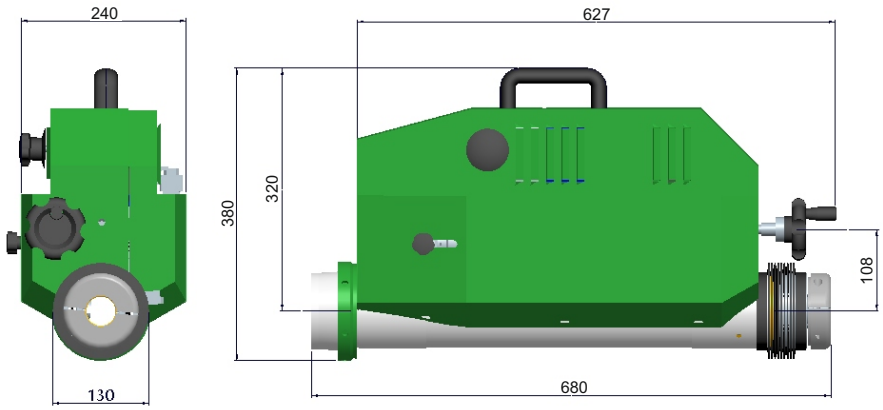

- Geared transmission
- Permanent lubrification
- Synchronous feed & rotation motion enables a smoother rotary welding mode
- Conical supports
- Telescopic welding torch
- 110 V power supply also available on request

TECHNICAL DATA SHEET

Diameters:

BORING BAR DIAMETER	mm	Ø 40
BORING BAR LENGTH	mm	2200
IN LINE BORING	mm	Ø 32 - Ø 250
INTERNAL WELDING	mm	Ø 32 - Ø 250
FACING		Kit optional

Rotation Motor

AC Motor single phase	
Power at rated speed 1800 W	
Max. Speed 2800 rpm	
Output torque at the bar 350 Nm	
Speed	1° speed range MAX 120 rpm
	2° speed range MAX 400 rpm

Feed Motor

DC Motor
Power at rated speed 90 W
Max. Speed 11 rpm
Electromechanical feed system
Manual/Automatic feed

Welding technology

Spiral (continous with variable step)

Longitudinal stroke

Unlimited with steps of 350 mm

Electronic control panel

Voltage - 220 V 50/60 Hz
Main switch
Emergency switch
Inverter cw/cww feed
Inverter cw/cww rotation
Potentiometer adjustment rotation rpm
Potentiometer adjustment feed rpm
Electrical absorption 2000 W

Dimensions

Length: 680 mm
Width: 240 mm
Height: 380 mm
Weight central unit: 41 kg

STANDARD EQUIPMENT

N° 1	MAIN UNIT
N° 1	ELECTRONIC CONTROL PANEL
N° 1	BORING BAR Ø 40 X 2200 mm
N° 1	BORING BAR EXTENSION 520 mm
N° 1	TELESCOPIC WELDING TORCH
N° 5	LANCE EXTENSION 35 mm
N° 4	LONG NOZZLE
N° 4	SHORT NOZZLE
N° 5	LONG CONTACT TIP Ø 0,8 mm
N° 5	SHORT CONTACT TIP Ø 0,8 mm
N° 1	BOX WITH 10 CUTTING EDGES
N° 1	TOOL HOLDER RIGHT Ø 12x100 mm
N° 1	TOOL HOLDER LEFT Ø 12x60 mm
N° 1	SPECIAL TOOL HOLDER LEFT Ø 12x40 mm
N° 1	TOOL HOLDER FOR BORING FROM Ø 100 TO 250 mm
N° 2	MAIN BAR SUPPORT
N° 2	ADDITIONAL SUPPORT
N° 1	SPINDLE CENTRING KIT FOR BLIND HOLES
N° 1	KIT FOR LINE BORING FROM Ø 32 TO 100 mm
N° 1	DIAL GAUGE
N° 1	DIAL GAUGE SUPPORT
N° 1	TELESCOPING GAUGE Ø 12 mm
N° 1	CABLE CONTROL PANEL/MACHINE
N° 1	POWER CABLE 220V/CONTROL PANEL
N° 1	BORING MACHINE STAND
N° 1	COMPLETE SET OF WRENCHES

Elsa S.r.l. Località La Petrizia - S.S. 106 88050, Sellia Marina (Cz) - Italia
Tel: (+39) 0961 962854 - Fax: (+39) 0961 968716 - elsasrl@elsasrl.com

WWW.ELSASRL.COM

Rev. JULY 2013

COSTRUZIONI MECCANICHE DI PRECISIONE

EN







SUPERCOMBINATA SC1 40/1

PORTABLE LINE BORING AND ROTARY WELDING MACHINE

(from Ø 42 mm to Ø 400 mm)

The **SUPERCOMBINATA** series for Line Boring and Overlay Welding have been manufactured in order to respond to the ever increasing demand for on-site machining and welding repairs within the mining and heavy plant sectors.

Our Line Boring Machines are extremely versatile, in respect to conventional machines, in reducing downtime and labour costs.

Due to the machines' portability, repairs can be carried out on site, thus eliminating the need to transport heavy plant equipment back to the workshop. The model **SUPERCOMBINATA SC1 40/1** has a **1800W - 4 geared motor** and its working range is from **Ø 42 mm** to **Ø 400 mm.** By means of extra equipment the diameter range can be increased to **Ø 600 mm or reduced down to Ø 22 mm.**

Furthermore the **SUPERCOMBINATA SC1 40/1** can be equipped with additional accessories to make the following applications:

- FACING
- BORING
- MILLING
- THREADING
- FLANGE FACING
- SEEGER CIRCLIPS

Elsa's range of Line Boring & Rotary Welding Machines are compatible with any MIG/MAG power source with an Euro connection.

EXTRA KITS

Code	Description
Kit for Line Boring	
KEP00187	Ø 22 mm - Ø 50 mm
KEP00188	Ø 32 mm - Ø 100 mm
Kit for Line Boring and Overlay Welding	
KED00180	Ø 400 A 600 mm
Kit allows the end user to Flange Face	
KES00186	Ø 45 mm - Ø 160 mm
KES00189	Ø 45 mm - Ø 260 mm
KES00200	Ø 80 mm - Ø 240 mm
KES00201	Ø 80 mm - Ø 400 mm
KES30023	Ø 80 mm - Ø 160 mm (KIT FOR CIRCLIP GROOVES)
KES30024	Ø 100 mm - Ø 250 mm (KIT FOR CIRCLIP GROOVES)
Kit for External Boring and Overlay Welding	
KEL00185	Ø 100 mm - Ø 300 mm
Kit for Threading	
KFL00928	Ø 120 mm - Ø 350 mm

ACCESSORIES

Code	Description
AE000643	DIGITAL CONTROL PANEL
AE000487	JOINT FOR BORING BAR (A) Ø 40 mm
AE000488	JOINT FOR BORING BAR (B) Ø 40 mm
AE030015	SISTEMA CAM
AE003018	BORING BAR Ø 40 X 1500 mm
AE003017	BORING BAR Ø 40 X 3000 mm

Elsa S.r.l. Località La Petrizia - S.S. 106 88050, Sellia Marina (Cz) - Italia
Tel: (+39) 0961 962854 - Fax: (+39) 0961 968716 - elsasrl@elsasrl.com

WWW.ELSASRL.COM

Rev. JULY 2013

COSTRUZIONI MECCANICHE DI PRECISIONE

EN

SUPERCOMBINATA SC1 40/1

PORTABLE LINE BORING AND ROTARY WELDING MACHINE

(from Ø 42 mm to Ø 400 mm)

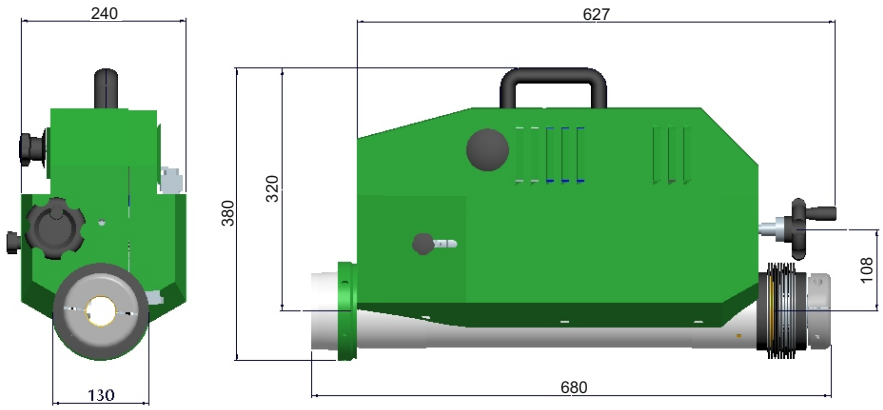

- Geared transmission
- Permanent lubrification
- Synchronous feed & rotation motion enables a smoother rotary welding mode
- Conical supports
- Telescopic welding torch
- 110 V power supply also available on request

TECHNICAL DATA SHEET

Diameters:

BORING BAR DIAMETER	mm	Ø 40
BORING BAR LENGTH	mm	2200
IN LINE BORING	mm	Ø 42 - Ø 400
EXTERNAL BORING		Kit optional
INTERNAL WELDING	mm	Ø 42 - Ø 400
EXTERNAL WELDING	mm	Ø 42 - Ø 400
DRILLING	mm	Ø 10 - Ø 45
TAPPING	mm	Ø 10 - Ø 45
THREADING		Kit optional
FACING		Kit optional

Rotation Motor

AC Motor single phase
Power at rated speed 1800 W
Max. Speed 2800 rpm
Output torque at the bar 350 Nm

Speed	1° speed range MAX 95 rpm
	2° speed range MAX 150 rpm
	3° speed range MAX 320 rpm
	4° speed range MAX 510 rpm

Feed Motor

DC Motor
Power at rated speed 90 W
Max. Speed 11 rpm
Electromechanical feed system
Manual/Automatic feed

Welding technology

Spiral (continous with variable step)

Longitudinal stroke

Unlimited with steps of 350 mm

Electronic control panel

Voltage - 220 V 50/60 Hz
Main switch
Emergency switch
Inverter cw/cww feed
Inverter cw/cww rotation
Potentiometer adjustment rotation rpm
Potentiometer adjustment feed rpm
Electrical absorption 2000 W

Dimensions

Length: 680 mm
Width: 240 mm
Height: 380 mm
Weight central unit: 41 kg

STANDARD EQUIPMENT

N° 1	MAIN UNIT
N° 1	ELECTRONIC CONTROL PANEL
N° 1	BORING BAR Ø 40 X 2200 mm
N° 1	BORING BAR Ø 40 X 1100 mm
N° 1	BORING BAR EXTENSION 520 mm
N° 1	TELESCOPIC WELDING TORCH
N° 1	LANCE FOR EXTERNAL WELDING
N° 1	LANCE EXTENSION 100 mm
N° 5	LANCE EXTENSION 35 mm
N° 4	LONG NOZZLE
N° 4	SHORT NOZZLE
N° 5	LONG CONTACT TIP Ø 0,8 mm
N° 5	SHORT CONTACT TIP Ø 0,8 mm
N° 1	BOX WITH 10 CUTTING EDGES
N° 1	TOOL HOLDER RIGHT Ø 12x100 mm
N° 1	TOOL HOLDER LEFT Ø 12x60 mm
N° 1	SPECIAL TOOL HOLDER LEFT Ø 12x40 mm
N° 1	TOOL HOLDER FOR BORING FROM Ø 100 TO 400 mm
N° 2	MAIN BAR SUPPORT
N° 2	ADDITIONAL SUPPORT
N° 1	SPINDLE CENTRING KIT
N° 1	SPINDLE CENTRING KIT FOR BLIND HOLES
N° 1	DIAL GAUGE
N° 1	DIAL GAUGE SUPPORT
N° 1	TELESCOPING GAUGE Ø 12 mm
N° 12	BRACKET FOR FLANGES
N° 1	CABLE CONTROL PANEL/MACHINE
N° 1	POWER CABLE 220V/CONTROL PANEL
N° 1	BORING MACHINE STAND
N° 1	COMPLETE SET OF WRENCHES

Elsa S.r.l. Località La Petrizia - S.S. 106 88050, Sellia Marina (Cz) - Italia
Tel: (+39) 0961 962854 - Fax: (+39) 0961 968716 - elsasrl@elsasrl.com

WWW.ELSASRL.COM

Rev. JULY 2013

COSTRUZIONI MECCANICHE DI PRECISIONE

EN







SUPERCOMBINATA SC1 40/1 Compact

PORTABLE LINE BORING AND ROTARY WELDING MACHINE

(from Ø 42 mm to Ø 250 mm)

The model **SUPERCOMBINATA SC1 40/1 Compact equipped with a 1800W 2-geared motor** is suitable to perform jobs from **Ø 42 mm** to **Ø 250 mm** and by means of extra equipment the diameter range can be increased to **Ø 600 mm or reduced down to Ø 22 mm. This model is different from the others by its compactness and lightness. Feed is endless by steps of 250 mm.**

The **SUPERCOMBINATA SC1 40/1 Compact** can be equipped with additional accessories to make the following applications:

- **FACING**
- **BORING**
- **MILLING**
- **THREADING**
- **FLANGE FACING**
- **SEEGER CIRCLIPS**

Elsa's range of Line Boring & Rotary Welding Machines have all the necessary equiment to be used immediately on site and they are compatible with any MIG/MAG power source with an Euro connection.

EXTRA KITS

Code	Description
Kit for Line Boring	
KEP00187	Ø 22 mm - Ø 50 mm
KEP00188	Ø 32 mm - Ø 100 mm
Kit for Line Boring and Overlay Welding	
KED00184	Ø 250 A 600 mm
Kit allows the end user to Flange Face	
KES00186	Ø 45 mm - Ø 160 mm
KES00189	Ø 45 mm - Ø 260 mm
KES00200	Ø 80 mm - Ø 240 mm
KES00201	Ø 80 mm - Ø 400 mm
KES30023	Ø 80 mm - Ø 160 mm (KIT FOR CIRCLIP GROOVES)
KES30024	Ø 100 mm - Ø 250 mm (KIT FOR CIRCLIP GROOVES)
Kit for External Boring and Overlay Welding	
KEL00185	Ø 100 mm - Ø 300 mm
Kit for Threading	
KFL00928	Ø 120 mm - Ø 350 mm

ACCESSORIES

Code	Description
AE000643	DIGITAL CONTROL PANEL
AE000487	JOINT FOR BORING BAR (A) Ø 40 mm
AE000488	JOINT FOR BORING BAR (B) Ø 40 mm
AE030015	SISTEMA CAM
AE003018	BORING BAR Ø 40 X 1500 mm
AE003017	BORING BAR Ø 40 X 3000 mm

Elsa S.r.l. Località La Petrizia - S.S. 106 88050, Sellia Marina (Cz) - Italia
Tel: (+39) 0961 962854 - Fax: (+39) 0961 968716 - elsasrl@elsasrl.com

WWW.ELSASRL.COM

Rev. JULY 2013

COSTRUZIONI MECCANICHE DI PRECISIONE

EN

SUPERCOMBINATA SC1 40/1 Compact

PORTABLE LINE BORING AND ROTARY WELDING MACHINE

(from Ø 42 mm to Ø 250 mm)

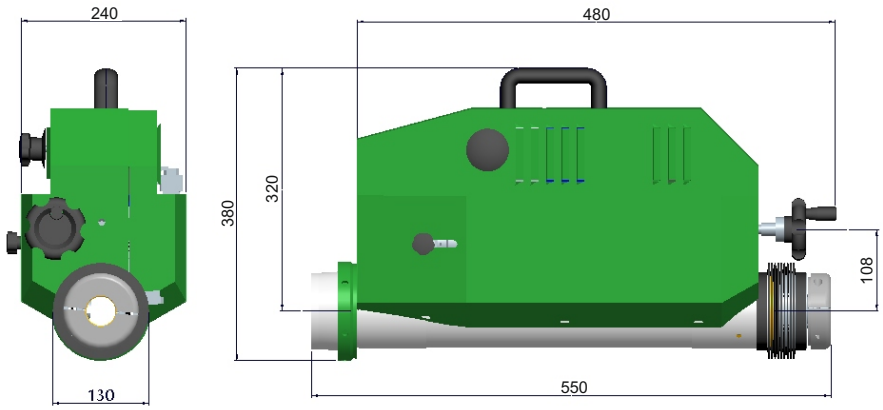

- Geared transmission
- Permanent lubrification
- Synchronous feed & rotation motion enables a smoother rotary welding mode
- Conical supports
- Telescopic welding torch
- 110 V power supply also available on request

TECHNICAL DATA SHEET

Diameters:

BORING BAR DIAMETER	mm	Ø 40
BORING BAR LENGTH	mm	2200
IN LINE BORING	mm	Ø 42 - Ø 250
EXTERNAL BORING		Kit optional
INTERNAL WELDING	mm	Ø 42 - Ø 250
EXTERNAL WELDING	mm	Ø 42 - Ø 250
DRILLING	mm	Ø 10 - Ø 45
TAPPING	mm	Ø 10 - Ø 45
THREADING		Kit optional
FACING		Kit optional

Rotation Motor

AC Motor single phase
Power at rated speed 1800 W
Max. Speed 2800 rpm
Output torque at the bar 350 Nm
Speed 1° speed range MAX 120 rpm
2° speed range MAX 400 rpm

Feed Motor

DC Motor
Power at rated speed 90 W
Max. Speed 11 rpm
Electromechanical feed system
Manual/Automatic feed

Welding technology

Spiral (continous with variable step)

Longitudinal stroke

Unlimited with steps of 250 mm

Electronic control panel

Voltage - 220 V 50/60 Hz
Main switch
Emergency switch
Inverter cw/cww feed
Inverter cw/cww rotation
Potentiometer adjustment rotation rpm
Potentiometer adjustment feed rpm
Electrical absorption 2000 W

Dimensions

Length: 550 mm
Width: 240 mm
Height: 380 mm
Weight central unit: 37 kg

STANDARD EQUIPMENT

N° 1	MAIN UNIT
N° 1	ELECTRONIC CONTROL PANEL
N° 1	BORING BAR Ø 40 X 2200 mm
N° 1	BORING BAR Ø 40 X 1100 mm
N° 1	BORING BAR EXTENSION 470 mm
N° 1	TELESCOPIC WELDING TORCH
N° 1	LANCE FOR EXTERNAL WELDING
N° 5	LANCE EXTENSION 35 mm
N° 4	LONG NOZZLE
N° 4	SHORT NOZZLE
N° 5	LONG CONTACT TIP Ø 0,8 mm
N° 5	SHORT CONTACT TIP Ø 0,8 mm
N° 1	BOX WITH 10 CUTTING EDGES
N° 1	TOOL HOLDER RIGHT Ø 12x100 mm
N° 1	TOOL HOLDER LEFT Ø 12x60 mm
N° 1	SPECIAL TOOL HOLDER LEFT Ø 12x40 mm
N° 1	TOOL HOLDER FOR BORING FROM Ø 100 TO 250 mm
N° 2	MAIN BAR SUPPORT
N° 2	ADDITIONAL SUPPORT
N° 1	SPINDLE CENTRING KIT
N° 1	SPINDLE CENTRING KIT FOR BLIND HOLES
N° 1	DIAL GAUGE
N° 1	DIAL GAUGE SUPPORT
N° 1	TELESCOPING GAUGE Ø 12 mm
N° 1	CABLE CONTROL PANEL/MACHINE
N° 1	POWER CABLE 220V/CONTROL PANEL
N° 1	BORING MACHINE STAND
N° 1	COMPLETE SET OF WRENCHES

Elsa S.r.l. Località La Petrizia - S.S. 106 88050, Sellia Marina (Cz) - Italia
Tel: (+39) 0961 962854 - Fax: (+39) 0961 968716 - elsasrl@elsasrl.com

WWW.ELSASRL.COM

Rev. JULY 2013

COSTRUZIONI MECCANICHE DI PRECISIONE

EN







SUPERCOMBINATA SC2 60/1

PORTABLE LINE BORING AND ROTARY WELDING MACHINE

(from Ø 62 mm to Ø 600 mm)

The model **SUPERCOMBINATA SC2 60/1** has a 1800W - 4 geared motor and its working range is from **Ø 62 mm** to **Ø 600 mm.** By means of extra accessories the working range can **be increased to Ø 1200 mm or reduced down to Ø 22 mm.**

Furthermore the **SUPERCOMBINATA SC2 60/1** can be equipped with additional accessories to make the following applications:

- **FACING**
- **BORING**
- **MILLING**
- **THREADING**
- **FLANGE FACING**
- **SEEGER CIRCLIPS**

Elsa's range of Line Boring & Rotary Welding Machines are compatible with any MIG/MAG power source with an Euro connection.

EXTRA KITS

Code	Description
Kit for Line Boring	
KEP00594	Ø 22 mm - Ø 50 mm
KEP00593	Ø 32 mm - Ø 100 mm
KEP00687	Ø 42 mm A 140 mm
Kit for Line Boring and Overlay Welding	
KED00360	Ø 600 mm - 800 mm
KED00366	Ø 600 mm - 1200 mm
Kit allows the end user to Flange Face	
KES00186	Ø 45 mm - Ø 160 mm
KES00189	Ø 45 mm - Ø 260 mm
KES00200	Ø 80 mm - Ø 240 mm
KES00201	Ø 80 mm - Ø 400 mm
KES30023	Ø 80 mm - Ø 160 mm (KIT FOR CIRCLIP GROOVES)
KES30024	Ø 100 mm - Ø 250 mm (KIT FOR CIRCLIP GROOVES)
KES00363	Ø 250 mm - Ø 500 mm
KES00364	Ø 400 mm - Ø 800 mm
Kit for External Boring and Overlay Welding	
KEL00185	Ø 100 mm - Ø 300 mm
Kit for Threading	
KFL00927	Ø 120 mm - Ø 350 mm

ACCESSORIES

Code	Description
AE000643	DIGITAL CONTROL PANEL
AE000441	JOINT FOR BORING BAR (A) Ø 60 mm
AE000442	JOINT FOR BORING BAR (B) Ø 60 mm
AE001027	BORING BAR Ø 60 X 1500 mm
AE030025	BORING BAR Ø 60 X 1100 WITH MORSE 4 TAPPER
AE003014	BORING BAR Ø 60 X 3000 mm

Elsa S.r.l. Località La Petrizia - S.S. 106 88050, Sellia Marina (Cz) - Italia
Tel: (+39) 0961 962854 - Fax: (+39) 0961 968716 - elsasrl@elsasrl.com

WWW.ELSASRL.COM

Rev. JULY 2013

COSTRUZIONI MECCANICHE DI PRECISIONE

EN

SUPERCOMBINATA SC2 60/1

PORTABLE LINE BORING AND ROTARY WELDING MACHINE

(from Ø 62 mm to Ø 600 mm)

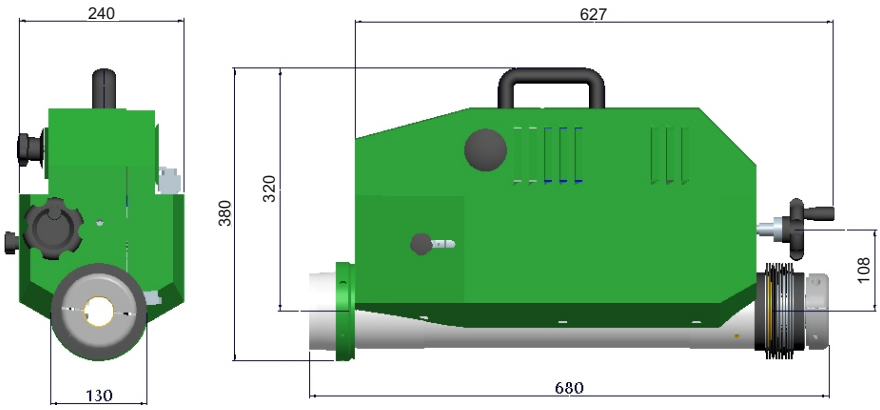

- Geared transmission
- Permanent lubrification
- Synchronous feed & rotation motion enables a smoother rotary welding mode
- Conical supports
- Telescopic welding torch
- 110 V power supply also available on request

TECHNICAL DATA SHEET

Diameters:

BORING BAR DIAMETER	mm	Ø 60
BORING BAR LENGTH	mm	2200
IN LINE BORING	mm	Ø 62 - Ø 600
EXTERNAL BORING		Kit optional
INTERNAL WELDING	mm	Ø 42 - Ø 600
EXTERNAL WELDING	mm	Ø 42 - Ø 600
DRILLING		Kit optional
TAPPING		Kit optional
THREADING		Kit optional
FACING		Kit optional

Rotation Motor

AC Motor single phase
Power at rated speed 1800 W
Max. Speed 2800 rpm
Output torque at the bar 650 Nm

Speed	1° speed range MAX 65 rpm
	2° speed range MAX 110 rpm
	3° speed range MAX 230 rpm
	4° speed range MAX 360 rpm

Feed Motor

DC Motor
Power at rated speed 90 W
Max. Speed 11 rpm
Electromechanical feed system
Manual/Automatic feed

Welding technology

Spiral (continous with variable step)

Longitudinal stroke

Unlimited with steps of 350 mm

Electronic control panel

Voltage - 220 V 50/60 Hz
Main switch
Emergency switch
Inverter cw/cww feed
Inverter cw/cww rotation
Potentiometer adjustment rotation rpm
Potentiometer adjustment feed rpm
Electrical absorption 2000 W

Dimensions

Length: 680 mm
Width: 240 mm
Height: 380 mm
Weight central unit: 42 kg

STANDARD EQUIPMENT

N° 1	MAIN UNIT
N° 1	ELECTRONIC CONTROL PANEL
N° 1	BORING BAR Ø 60 X 2200 mm
N° 1	BORING BAR EXTENSION 520 mm
N° 1	TELESCOPIC WELDING TORCH
N° 1	LANCE FOR EXTERNAL WELDING
N° 3	DIFFUSER EXTENSION 100 mm
N° 5	LANCE EXTENSION 35 mm
N° 4	LONG NOZZLE
N° 4	SHORT NOZZLE
N° 5	LONG CONTACT TIP Ø 0,8 mm
N° 5	SHORT CONTACT TIP Ø 0,8 mm
N° 1	ADJUSTING PLUG FOR TOOL HOLDER
N° 1	BOX WITH 10 CUTTING EDGES
N° 1	TOOL HOLDER RIGHT Ø 12X100 mm
N° 1	TOOL HOLDER LEFT Ø 12X60 mm
N° 1	TOOL HOLDER LEFT Ø 12X60 mm
N° 1	TOOL HOLDER RING FOR WORKS FROM Ø 250 TO 600 mm
N° 1	TOOL HOLDER FOR BORING FROM Ø 120 TO 250 mm
N° 2	MAIN BAR SUPPORT
N° 2	ADDITIONAL SUPPORT
N° 1	CENTRING KIT FROM Ø 250 TO 600 mm
N° 1	SPINDLE CENTRING KIT
N° 1	SPINDLE CENTRING KIT FOR BLIND HOLES
N° 1	DIAL GAUGE
N° 1	DIAL GAUGE SUPPORT
N° 1	TELESCOPING GAUGE Ø 12 mm
N° 18	BRACKET FOR FLANGES
N° 4	FLANGES SUPPORT FROM Ø 250 TO 600 mm
N° 1	REDUCTION BUSHING DRAWING TORCH
N° 1	REDUCTION BUSHING LOCKING TORCH
N° 18	HEXAGONAL BOLT M14X80 mm
N° 18	ALLEN BOLT M14X50 mm
N° 18	HEXAGONAL NUT M14
N° 1	CABLE CONTROL PANEL/MACHINE
N° 1	POWER CABLE 220V/CONTROL PANEL
N° 1	BORING MACHINE STAND
N° 1	COMPLETE SET OF WRENCHES

Elsa S.r.l. Località La Petrizia - S.S. 106 88050, Sellia Marina (Cz) - Italia
Tel: (+39) 0961 962854 - Fax: (+39) 0961 968716 - elsasrl@elsasrl.com

WWW.ELSASRL.COM

Rev. JULY 2013

COSTRUZIONI MECCANICHE DI PRECISIONE

EN







SUPERCOMBINATA SC3 60/2

PORTABLE LINE BORING AND ROTARY WELDING MACHINE

(from Ø 62 mm to Ø 800 mm)

The model **SUPERCOMBINATA SC3 60/2 has a 2300W 4-geared motor** and its working range is from **Ø 62 mm** a **Ø 800 mm.**
By means of extra accessories the working range can **be increased to Ø 1200 mm or reduced down to Ø 22 mm.**

Furthermore the **SUPERCOMBINATA SC3 60/2** can be equipped with additional accessories to make the following applications:

- **FACING**
- **BORING**
- **MILLING**
- **THREADING**
- **FLANGE FACING**
- **SEEGER CIRCLIPS**

Elsa's range of Line Boring & Rotary Welding Machines are compatible with any MIG/MAG power source with an Euro connection.

EXTRA KITS

Code	Description
Kit for Line Boring	
KEP00594	Ø 22 mm - Ø 50 mm
KEP00593	Ø 32 mm - Ø 100 mm
KEP00687	Ø 42 mm - Ø 140 mm
Kit for Line Boring and Overlay Welding	
KED00366	Ø 600 mm - 1200 mm
Kit allows the end user to Flange Face	
KES00186	Ø 45 mm - Ø 160 mm
KES00189	Ø 45 mm - Ø 260 mm
KES00200	Ø 80 mm - Ø 240 mm
KES00201	Ø 80 mm - Ø 400 mm
KES30023	Ø 80 mm - Ø 160 mm (KIT FOR CIRCLIP GROOVES)
KES30024	Ø 100 mm - Ø 250 mm (KIT FOR CIRCLIP GROOVES)
KES00363	Ø 250 mm - Ø 500 mm
KES00364	Ø 400 mm - Ø 800 mm
Kit for External Boring and Overlay Welding	
KEL00185	Ø 100 mm - Ø 300 mm
Kit for Threading	
KFL00927	Ø 120 mm - Ø 350 mm

ACCESSORIES

Code	Description
AE000644	DIGITAL CONTROL PANEL
AE000441	JOINT FOR BORING BAR (A) Ø 60 mm
AE000442	JOINT FOR BORING BAR (B) Ø 60 mm
AE001027	BORING BAR Ø 60 X 1500 mm
AE030025	BORING BAR Ø 60 X 1100 WITH MORSE 4 TAPPER
AE003014	BORING BAR Ø 60 X 3000 mm

Elsa S.r.l. Località La Petrizia - S.S. 106 88050, Sellia Marina (Cz) - Italia
Tel: (+39) 0961 962854 - Fax: (+39) 0961 968716 - elsasrl@elsasrl.com

WWW.ELSASRL.COM

Rev. JULY 2013

COSTRUZIONI MECCANICHE DI PRECISIONE

EN

SUPERCOMBINATA SC3 60/2

PORTABLE LINE BORING AND ROTARY WELDING MACHINE

(from Ø 62 mm to Ø 800 mm)

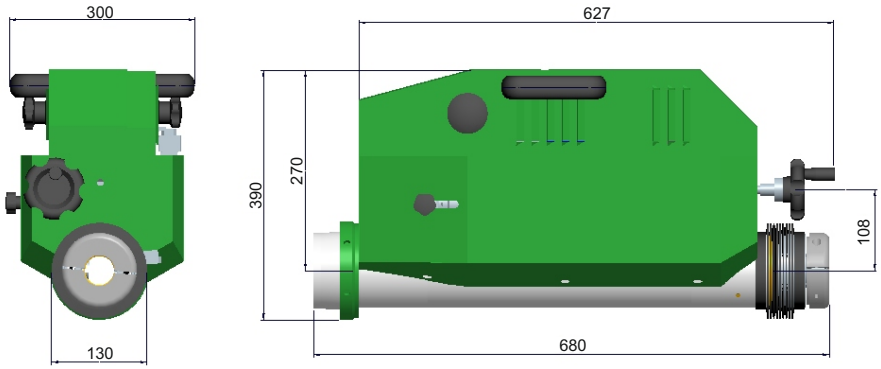

- Geared transmission
- Permanent lubrification
- Synchronous feed & rotation motion enables a smoother rotary welding mode
- Conical supports
- Telescopic welding torch
- 110 V power supply also available on request

TECHNICAL DATA SHEET

Diameters:

BORING BAR DIAMETER	mm	Ø 60
BORING BAR LENGTH	mm	2200
IN LINE BORING	mm	Ø 62 - Ø 800
EXTERNAL BORING		Kit optional
INTERNAL WELDING	mm	Ø 42 - Ø 800
EXTERNAL WELDING	mm	Ø 42 - Ø 800
DRILLING		Kit optional
TAPPING		Kit optional
THREADING		Kit optional
FACING		Kit optional

Rotation Motor

AC Motor single phase
Power at rated speed 2300 W
Max. Speed 2800 rpm
Output torque at the bar 1150 Nm

Speed	1° speed range MAX 55 rpm
	2° speed range MAX 82 rpm
	3° speed range MAX 220 rpm
	4° speed range MAX 370 rpm

Feed Motor

DC Motor
Power at rated speed 90 W
Max. Speed 11 rpm
Electromechanical feed system
Manual/Automatic feed

Welding technology

Spiral (continous with variable step)

Longitudinal stroke

Unlimited with steps of 350 mm

Electronic control panel

Voltage - 220 V 50/60 Hz
Main switch
Emergency switch
Inverter cw/cww feed
Inverter cw/cww rotation
Potentiometer adjustment rotation rpm
Potentiometer adjustment feed rpm
Electrical absorption 2300 W

Dimensions

Length: 680 mm
Width: 300 mm
Height: 390 mm
Weight central unit: 45 kg

STANDARD EQUIPMENT

N° 1	MAIN UNIT
N° 1	ELECTRONIC CONTROL PANEL
N° 1	BORING BAR Ø 60 X 2200 mm
N° 1	BORING BAR EXTENSION 520 mm
N° 1	TELESCOPIC WELDING TORCH
N° 1	LANCE FOR EXTERNAL WELDING
N° 5	DIFFUSER EXTENSION 100 mm
N° 5	LANCE EXTENSION 35 mm
N° 4	LONG NOZZLE
N° 4	SHORT NOZZLE
N° 5	LONG CONTACT TIP Ø 0,8 mm
N° 5	SHORT CONTACT TIP Ø 0,8 mm
N° 1	ADJUSTING PLUG FOR TOOL HOLDER
N° 1	BOX WITH 10 CUTTING EDGES
N° 1	TOOL HOLDER RIGHT Ø 12X100 mm
N° 1	TOOL HOLDER LEFT Ø 12X60 mm
N° 1	TOOL HOLDER LEFT Ø 12X60 mm
N° 1	TOOL HOLDER RING FOR WORKS FROM Ø 250 TO 800 mm
N° 1	TOOL HOLDER FOR BORING FROM Ø 120 TO 250 mm
N° 2	MAIN BAR SUPPORT
N° 2	ADDITIONAL SUPPORT
N° 1	CENTRING KIT FROM Ø 250 TO 800 mm
N° 1	SPINDLE CENTRING KIT
N° 1	SPINDLE CENTRING KIT FOR BLIND HOLES
N° 1	DIAL GAUGE
N° 1	DIAL GAUGE SUPPORT
N° 1	TELESCOPING GAUGE Ø 12 mm
N° 18	BRACKET FOR FLANGES A
N° 18	BRACKET FOR FLANGES B
N° 4	FLANGES SUPPORT FROM Ø 250 TO 800 mm
N° 1	REDUCTION BUSHING DRAWING TORCH
N° 1	REDUCTION BUSHING LOCKING TORCH
N° 18	HEXAGONAL BOLT M14X80 mm
N° 54	ALLEN BOLT M14X50 mm
N° 18	HEXAGONAL NUT M14
N° 1	CABLE CONTROL PANEL/MACHINE
N° 1	POWER CABLE 220V/CONTROL PANEL
N° 1	BORING MACHINE STAND
N° 1	COMPLETE SET OF WRENCHES

Elsa S.r.l. Località La Petrizia - S.S. 106 88050, Sellia Marina (Cz) - Italia
Tel: (+39) 0961 962854 - Fax: (+39) 0961 968716 - elsasrl@elsasrl.com

WWW.ELSASRL.COM

Rev. JULY 2013