Inductive proximity switch
IKU 861.38 G S4

- Sensor surface 600 x 130 mm
- Rated operating distance (S_n) 200 mm
- PNP normally open + normally closed
- Plug S4 (M12x1 A)



Product Characteristics

Type	**IKU 861.38 G S4**
Connection	**Art.-No.**
Plug S4 (M12x1 A)	2227J
Application	Non-contact detection of metallic objects

Technical Data

Rated operating distance (S_n)	200 mm (100 mm)
Target steel St37, 1 mm thick	800 x 350 mm (200 x 140 mm)
Operating distance adjustable	yes
Switching hysteresis (H)	1 - 15 %
Location at metal	non flush
Supply voltage (U_B)	10 - 55 V DC
Ripple voltage	max. 15 %
Output	PNP normally open + normally closed
Continuous current	0 - 400 mA
Short-circuit protection	yes, pulsing
No-load current (I_0)	< 10 mA
Voltage drop (U_d)	< 2 V
Operating frequency (f)	10 Hz
Ambient temperature	-25 ... +70 °C
Protection class	IP 65
Housing material	plastic / aluminum
Functional display	Duo LED red / green

Connection

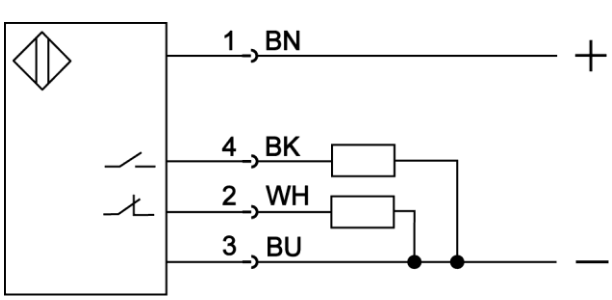

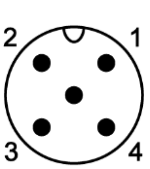

Dimension (mm)

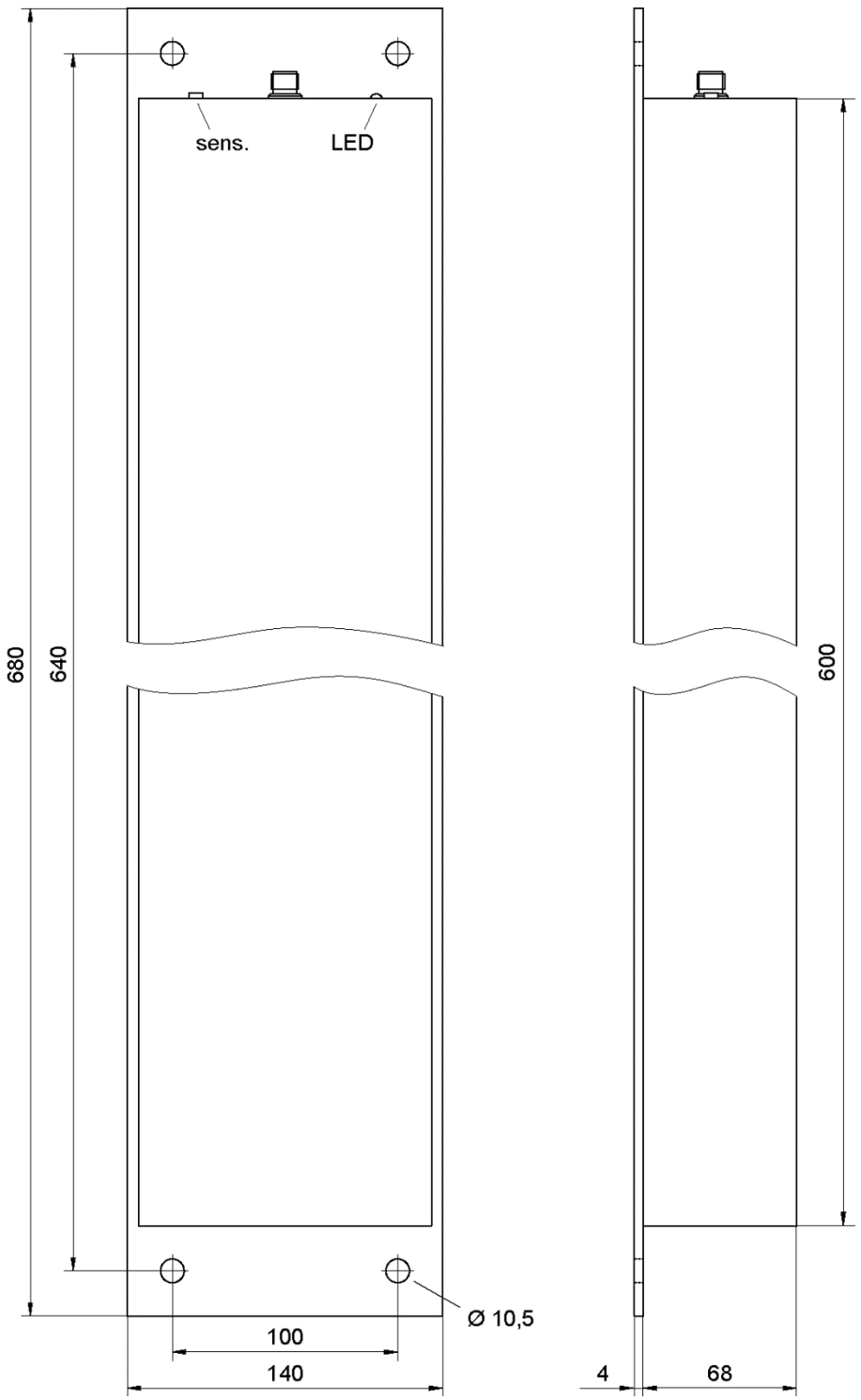

Accessories (in scope of supply)

	Type	Art.-No.
-	-	-

Accessories (**not** in scope of supply)

	Type	Art.-No.
Female plug S4 (M12 x 1 A), straight, can be assembled, 4 wire	ST040G	9842D
Female plug S4 (M12 x 1 A), angular, can be assembled, 4 wire	ST040	9841A
Connection cable 2 m, 4 wire, with straight female plug S4 (M12 x 1 A)	ST043/4-2	9851I
Connection cable 5 m, 4 wire, with straight female plug S4 (M12 x 1 A)	ST043/4-5	9841T
Connection cable 10 m, 4 wire, with straight female plug S4 (M12 x 1 A)	ST043/4-10	9850J
Connection cable 2 m, 4 wire, with angular female plug S4 (M12 x 1 A)	ST041/4-2	9841D
Connection cable 5 m, 4 wire, with angular female plug S4 (M12 x 1 A)	ST041/4-5	9841E
Connection cable 10 m, 4 wire, with angular female plug S4 (M12 x 1 A)	ST041/4-10	9841S

Further information

	Document
Manual	BDA_IK_D_E