

Haier 49-5000094-6 High Wall Duct-Free System Owner's Manual

Contents

1 Haier 49-5000094-6 High Wall Duct-Free System
2 IMPORTANT SAFETY INFORMATION READ ALL INSTRUCTIONS BEFORE USING THE APPLIANCE
3 REMOTE CONTROL FEATURES AND SETTINGS
4 Remote Control Features and Setting
5 SLEEP Button
6 Remote Control Features and Settings
7 Emergency Operation and Maintenance
8 Optimizing Performance
9 Cleaning the Front Cover
10 Troubleshooting Tips … Before you call for service
11 LIMITED WARRANTY
12 Documents / Resources
12.1 References
13 Related Posts

Haier 49-5000094-6 High Wall Duct-Free System



IMPORTANT SAFETY INFORMATION
READ ALL INSTRUCTIONS BEFORE USING THE APPLIANCE

Warning: For your safety, the information in this manual must be followed to minimize the risk of fire, electric shock, or personal injury.

- Use this appliance only for its intended purpose as described in this Owner's Manual.
- This heat pump must be properly installed in accordance with the Installation Instructions before it is used.
- Turn the unit OFF and unplug your heat pump before cleaning the air filter.
- GE Appliances does not support any servicing of the heat pump. We strongly recommend that you do not attempt to service the heat pump yourself.
- For your safety…do not store or use combustible materials, of this or any other appliance. If you are getting rid of an old product with refrigerants, check with the company handling disposal about what to do.
- These R410A heat pump systems require contractors and technicians to use tools, equipment, and safety standards approved for use with this refrigerant. DO NOT use equipment certified only.

Warning: Keep batteries away from children.

- This remote controller contains batteries.
- If a new or used battery is swallowed or enters the body, it can cause severe internal burns and can lead to death in as little as 2 hours.
- Always completely secure the battery compartment.
- If the battery compartment does not close securely, stop using the product, remove the batteries, and keep it away from children.
- If you think batteries might have been swallowed or placed inside any part of the body, seek immediate

medical attention.

- The cells shall be disposed of properly, including keeping them away from children.
- Even used cells may cause injury.

REMOTE CONTROL FEATURES AND SETTINGS

Remote Control

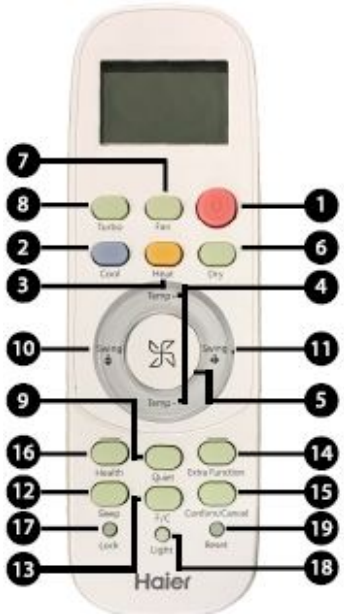

1. **Power Button**
   Press the ON/OFF button on the remote control to start or stop the unit.
2. **COOL Button**
   In COOL mode, the unit operates in cooling. When FAN is set to AUTO, the heat pump automatically adjusts the fan speed according to the room temperature. The will be displayed during COOL mode.
3. **HEAT Button**
   In HEAT mode, warm air will blow out after a short period of time due to the cold-air prevention function. When FAN is set to AUTO, the heat pump automatically adjusts the fan speed according to room temperature. The will be displayed during HEAT mode.
   49-5000094 Rev. 6

4. **Temperature +/- Button**
Temp +: Every time the button is pressed, the temperature setting increases. Temp -: Every time the button is pressed, the temperature setting decreases. The operating temperature range is 60°F-86°F (16°C-30°C).FAN SPEED Button

FAN SPEED: For each press, the fan speed changes as follows: Remote control:



DRY Button
DRY mode is used to reduce humidity. In DRY mode, when room temperature becomes lower than temp. setting

+2°F, unit will run intermittently at LOW speed regardless of FAN setting. The will be displayed during DRY mode.

FAN MODE Button
FAN mode circulates air only; there is no temperature adjustment available. Use the fan speed button (5) to adjust fan speed from low, to medium to high. Auto, Turbo, and Quiet are not available.

TURBO Button
The TURBO function is used for the fastest air flow in Heating or Cooling modes. Control will display the TURBO icon [UP ARROW] on the bottom right side of the remote display. Pressing the TURBO button again or the FAN SPEED button will turn TURBO off.

Quiet Button
The QUIET function switches the fan to the lowest speed. The control will display the QUIET icon [DOWN ARROW]
on the bottom left side of the remote display. Pressing the QUIET button again or the FAN SPEED button will turn QUIET off.

Louver UP/DOWN Button
Press the LOUVER UP/DOWN button to choose the position of the horizontal airflow louvers.
Status display of airflow cooler/Dry: Heat

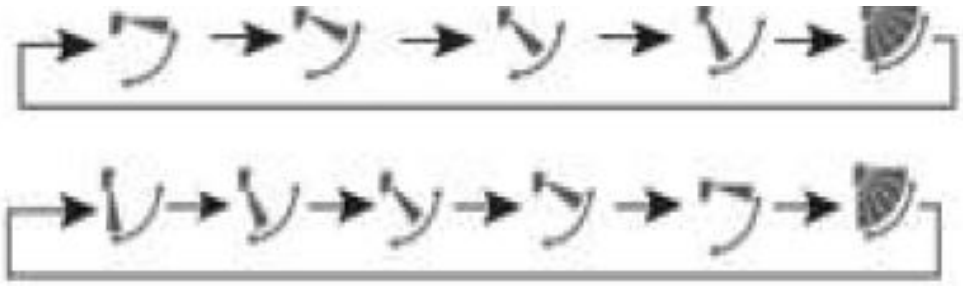

NOTE:

- It is advisable not to keep the vertical louver in the downward position for an extended period of time in COOL or DRY mode, otherwise condensate water may form on the louver.
- When turning the unit on, the remote control will automatically return the louver to the previous set swing position. When turning the unit off, the louver will rotate to the full open position prior to closing.

Remote Control Features and Setting

Louver SIDE/SIDE Button (select models)

Press the LOUVER SIDE/SIDE button to choose the position of the vertical airflow louvers. Status display of airflow COOL/DRY/HEAT/FAN



NOTE:

- • When humidity levels are high, condensate water may occur at the air outlet if all vertical louvers are adjusted

too far left or right.

• When turning the unit on, the remote control will automatically return the louver to the previous set position.

SLEEP Button

This SLEEP function automatically adjusts the set temperature of the heat pump to provide a comfortable sleeping environment. SLEEP function is only available in COOL, HEAT, and AUTO mode. The unit will exit the SLEEP function in the event of pressing the SLEEP button again, turning off the unit with a remote controller, or shutting down the whole system from the power outlet. If no other command is chosen during the SLEEP function, the unit will shut off itself after 8 hours of run time. During the SLEEP function, the fan speed can be adjusted to the desired comfort level. The control logic for the SLEEP function will follow as below charts for different modes:

Fahrenheit/Celcius Button

- Press F/C to toggle remote and unit display temperature between Fahrenheit and Celsius.

EXTRA FUNCTION Button

Press the EXTRA FUNCTION button to view all other operations. Press CONFIRM/CANCEL to select and save the chosen operation. If no button is pressed for 10 seconds, the remote will exit EXTRA FUNCTION mode.

Feature not available on this series.
A-B selection – This will allow you to control two separate units with a single remote control. Note: This feature would be set up at the time of installation by the contractor.
Auto mode – The heat pump will automatically select Cool, Heat, or Fan operation according to set temperature. When FAN is set to AUTO the heat pump automatically adjusts the fan speed according to room temperature.
Upper and Lower louver lock.

1. The upper louver lock will lock the horizontal louver in the top position. Commonly used during cooling.
2. The lower louver lock will lock the horizontal louver in the lower position. Commonly used during heating. To unlock the louver press the EXTRA FUNCTION button until either a single louver icon or oscillate icon .

Note: When the louver is locked, the position cannot be changed with the LOUVER UP/DOWN button.

- Timer ON/OFF: Sets a countdown timer until the unit is turned ON/OFF. TEMP+/TEMP- button is pressed with the length of time increment/decrement in 0.5 hours between
- 12 hours, and 1-hour increment/decrement between 12-24 hours.
- When the remote is set to ON, the system will turn off until the countdown timer ends. Then the indoor unit will turn on and operate in mode, temperature setting, and fan speed that was displayed when the timer was set.
- When the remote is set to OFF, the system will remain ON until the countdown timer ends.
- 50°F Heating sets the system to maintain 50°F. This is used to prevent freezing during long unoccupied periods of time.
- Confirm/Cancel Button Saves and exits the EXTRA FUNCTION selection.
- HEALTH Button: Feature is not Available
- LOCK Button: Used to lock buttons and LCD display.

Remote Control Features and Settings

- **LIGHT Button**
  The indoor display panel will show an indoor set temperature by default. Press this button once, it will display the room temperature. Press this button twice within 3 seconds, it will turn off the indoor display panel. Press again to go back to display the indoor set temperature.
- 19. RESET Button If the remote control is not functioning properly, use a pen point or a similar object to depress this button to reset the remote.

Emergency Operation and Maintenance

Emergency Operation

- Use this operation only when the remote control is defective or lost.
- When the emergency operation switch is pressed, the unit beeps once, which indicates the start of this operation.
- The unit will run automatically in the following modes:

Room temperature	Designated temperature	Timer mode	Fan speed	Operation mode
Above 73°F	79°F	No	AUTO	COOL
Below 73°F	73°F	No	AUTO	HEAT

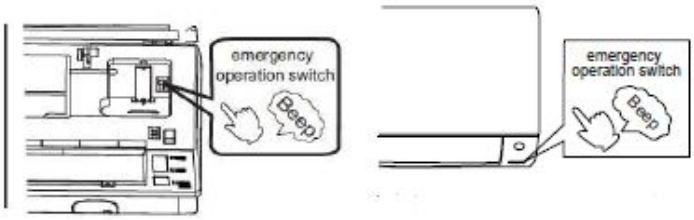

During emergency operations, it is not possible to change the temperature or fan speed. It is also not possible to operate in timer or dry modes.

Inserting the Batteries

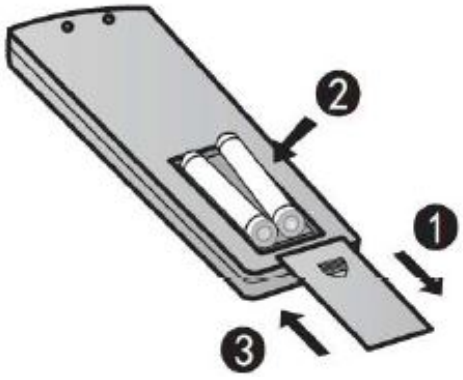

NOTE:

- • The distance from the remote control to the receiver should

be less than 23 feet with no obstructions.

- If the remote control display is weak or the operating distance has diminished, the batteries may need to be replaced.
- Remote control malfunctions can sometimes be corrected by removing the batteries from the remote for a few minutes and then reinstalling them.
- Remove the batteries from the remote control if the unit will not be in use for an extended period of time. If any segments of the display remain active after battery removal, press the reset button.

Optimizing Performance

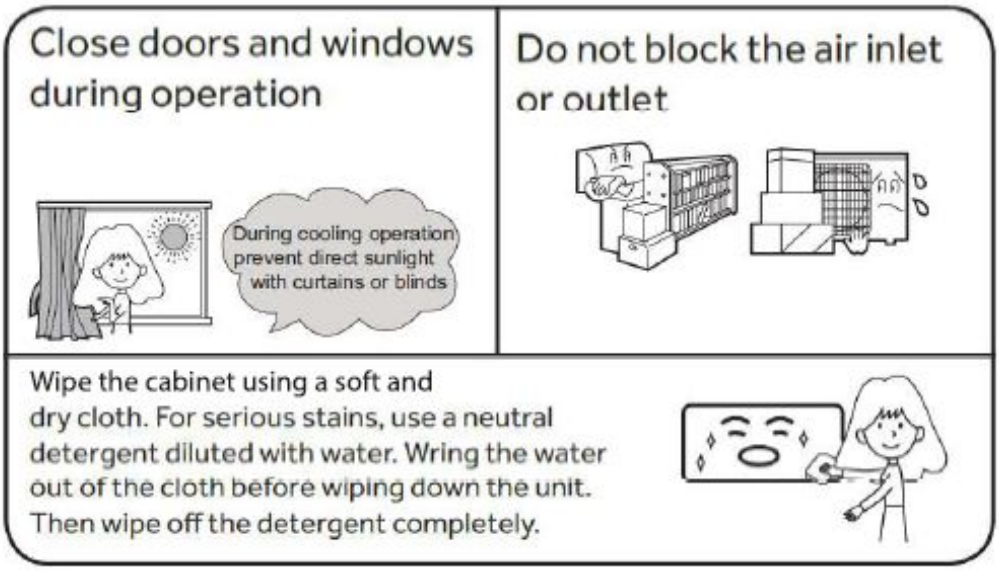

Cleaning the Front Cover



1. Open the front cover by pulling it upward

2. Remove the Filter: Gently push up on the filter's center tab until it is released from the stopper, and remove the filter in a downward motion.
   Clean the filter Use a vacuum cleaner to remove dust, or wash the filter with water. After washing, dry the filter completely.
3. Attach the filter
4. Attach the filter so that the "FRONT" label is facing outward. Make sure that the filter is securely attached behind the holding tabs. If the filter is not attached correctly the unit may not achieve maximum efficiency.
5. Close the front cover.

Troubleshooting Tips … Before you call for service

For additional troubleshooting tips, see the full owner's manual at GEAppliances.com.

	Problem	Cause and Solution
Normal Performance Inspection	The system does not r estart immediately	When the unit is stopped, it will not restart again for 3 minutes t o protect the system. When electricity is disconnected then reconnected, the protecti on circuit will be active for 3 minutes to protect the heat pump.
	Noise is heard	During unit operation or a sudden stop, a swishing or gurgling noise During unit operation, a cracking noise may be heard. This noi se is sometimes generated by the casing expanding or shrinki ng due to temperature changes. may be too dirty.
	Odors	The system circulates odors lingering in the airstream, such as the smell of furniture, paint, and/or cigarettes.
	Mist or steam is blowin g out	During COOL or DRY mode, the indoor unit may blow out mist or steam. This is due to the sudden cooling of the indoor air.
	In DRY mode, fan spee d cannot be changed	In DRY mode, when the room temperature becomes lower tha n the set temperature by 2°F, the unit will run intermittently at L OW speed regardless of FAN setting.
Items to look for		Is there a power failure? Is the fuse blown?
	Poor Cooling	Is there anything blocking the inlet and/or outlet? Is the temper ature set correctly? Are there any doors or windows open? Is there any direct sunlight shining through the window during t he cooling operation? Are there too many heat sources or too many people in the roo m during cooling operation?

LIMITED WARRANTY

For warranty detail please refer to the installation manual.

Documents / Resources

	Haier 49-5000094-6 High Wall Duct-Free System [pdf] Owner's Manual 49-5000094-6, High Wall Duct-Free System

References

- GE Appliances: Shop for Home, Kitchen, & Laundry Appliances
- Haier Appliances Homepage - Memorial Day
- Ductless Registration | Haier Appliances
- Ductless Registration | Haier Appliances

Manuals+,