Evo, Inc.
20560 SW 115th Ave.
Tualatin, OR 97062
P 503-626-1802 • F 503-213-5869
www.evoamerica.com

Project: _____
Location: _____
Item #: _____ Qty: _____
Model #: _____

AIA #

SIS#

10-0054

Model# **10-0054**

Evo® Affinity 30G



Drop-In Gas Cooktop

OUTDOOR

Circular Presentation Cooktop Designed For Fast Temperature Recovery and Variable Heat Control

- 30" (762mm) circular black seasoned steel cooking surface.
- 1/4" (6.35mm) thick conditioned steel cooking surface retains heat for more consistent temperatures.
- Two circular temperature zones: inner and outer surface.
- Variable temperatures 225ºF to 550ºF (121ºC to 288ºC).
- With LP Propane gas 37,638 BTUs.
- With Natural Gas 36,267 BTUs.
- Knobs separately control inner and outer burners.
- Electronic push button ignition.
- Natural Gas standard, and LP Propane gas option.

Designed For Custom Specified Outdoor Display Kitchens

- Install to steel, or combustibles with 3/8" min. clearance.
- Install to end base or right angle counter configurations.
- Circular cook surface and radius control panel opens design possibilities.
- AutoCAD libraries listed on The KCL cadalog.

Easy Operation, Easy Maintenance, Easy Cleanup

- Food service staff skill level: Intermediate.
- Cooking techniques: sauté, braise, flattop (plancha) grilling, deep fry, pan fry, roast, poach, steam, toast.
- Cook surface is extremely durable and easy to clean.
- Stainless steel burners are protected against spill overs.
- Stainless steel drip pan surrounds cook surface with forward spillover slots to dual spill collection trays.
- Spill collection trays are conveniently located in doors at each outward side of control panel.

SHORT FORM SPECIFICATIONS:

The Evo Affinity 30G has a 30" (762mm) diameter, 1/4" (6.35mm) *thick, black seasoned steel cook surface heated underneath by inner and outer cook surface zones. Evo's technology allows independent heat adjustment across inner and outer cook surface zones for managing a wide range of menu possibilities. Surface temperatures range from 225ºF to 550ºF (121ºC to 288ºC) from the center to the outside edge.* Operating on either Natural Gas or Propane LP Gas, the Affinity 30G Cooktop is an ideal solution for any outdoor display cooking application.

Optional Accessories



30G Trim Kit
Countertop Cutout
11-0123-ATK



30G Top Mount Chassis
Standalone Converter
11-0120-ATM

Data

Model	Cook Surface	Dimensions		BTU Rate	Net Weight	Ship Weight
		H	W			
10-0054	30 Inches	11 3/8" 289mm	36 5/32" 918mm	NG 36,267 LP 37,638	183 lbs 83 kg	255 lbs 116 kg

Due to ongoing product improvement, specifications are subject to change without notice.

MADE IN AMERICA | NSF | O-TL | Evo AutoCAD files www.kclcad.com | Limited 1 YEAR Warranty

Approvals:

Available At:

© Evo, Inc. 2018. All Rights Reserved.

Model# **10-0054**

Evo® Affinity 30G

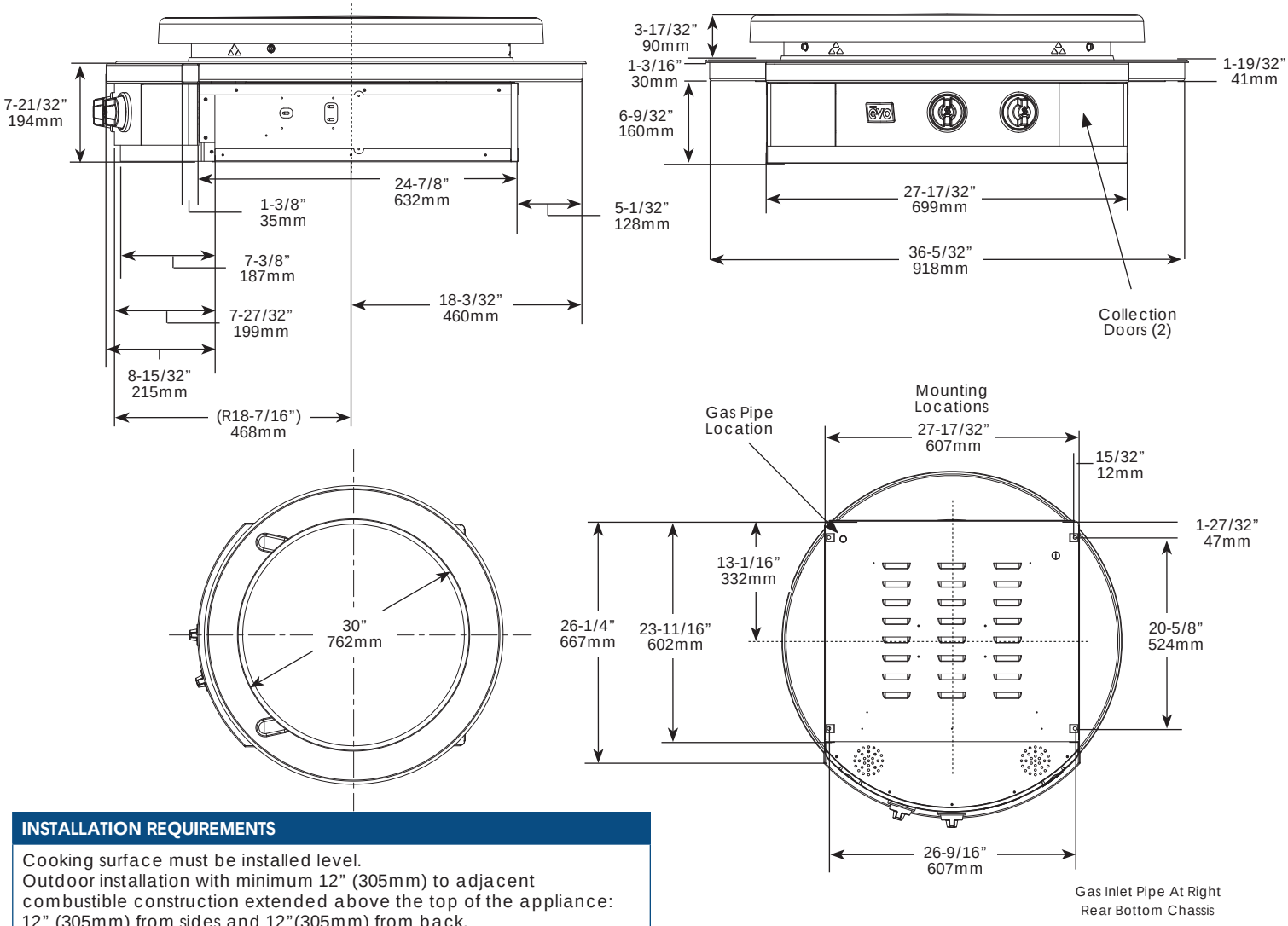

INSTALLATION REQUIREMENTS

Cooking surface must be installed level.
Outdoor installation with minimum 12" (305mm) to adjacent combustible construction extended above the top of the appliance: 12" (305mm) from sides and 12"(305mm) from back.

NATURAL GAS CONNECTION

OPERATING PRESSURE
No regulator, connect to an outlet pressure of 7" water column.
INLET / SUPPLY CONNECTION
1/2" FNPT. 12' Hose with 1/2" FNPT Quick Disconnect Supplied.
1/2" NPT to 3/8" Flare supplied.
BTUs: 36,267
CONNECTION LOCATION
Gas inlet right rear chassis.

LP PROPANE CONNECTION

OPERATING PRESSURE
Regulator is set for an outlet pressure of 11" water column.
INLET / SUPPLY CONNECTION
1/2" FNPT Inlet. 5' Hose & Regulator with QCC1 Supplied.
1/2" NPT to 3/8" Flare supplied.
BTUs: 37,638
CONNECTION LOCATION
Gas pipe right rear chassis.

DIMENSIONS

MAXIMUM (H X W)
11 3/8" x 36-5/32" (289mm x 918mm)
COOK SURFACE
30" diameter (762mm)

WEIGHT

NET: 183 lb EST. (83 kg)
SHIP: 255 lb EST (116 kg)

CRATE DIMENSIONS: 42" x 42" x 24" (1066mm x 1066mm x 610mm)

STANDARD FEATURES

- 30" circular black seasoned steel cook surface over dual independent manually controlled gas burners.
- 2 removable spill over trays contained in front doors.
- Electronic push button ignition.
- Stainless steel lid.
- Mounting brackets included.

ACCESSORIES INCLUDED

- Professional grill surface cleaning kit (3M brand) - Includes handle, cook surface cleaning pad and screen.
- 2 stainless steel spatulas, 1 stainless steel scraper, stainless steel cleaner and protectant.
- Owner's Manual & Use and Care Instructions.

Evo, Inc., 20560 SW 115th Ave., Tualatin, OR 97062
Ph 503-626-1802 • Fax 503-213-5869 • www.evoamerica.com • sales@evoamerica.com
Evo® is protected under U.S. Patents 6,189,530 and 6,488,022, and U.S. Patents Pending