POWER FACTOR REGULATOR Computer max 6/ max 12

➢ The **Computer max 6/ max 12** PF regulators measure cosφ in a supply system and control the connection and disconnection of capacitors to obtain a target programmed value.

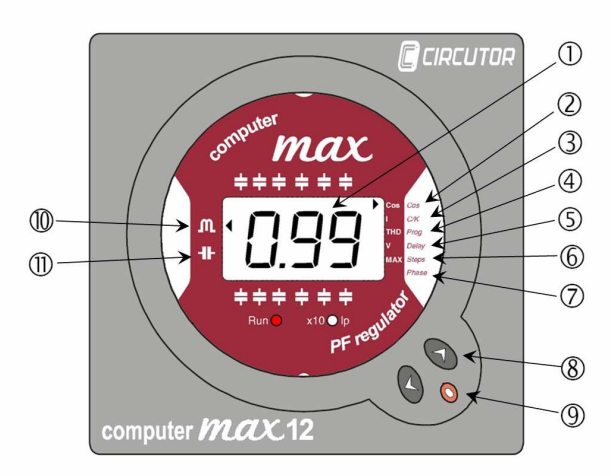

	Display / Teclado
①	Standard mode: Displays cosφ
②	cosφ Indication / setting
③	C/K setting. See paragraph 6
④	Program setting. See 4.2
⑤	Delay time setting for switching on/off operations
⑥	Nr of steps setting
⑦	Setting CT phase and polarity connection
⑧	- Cursor keys (when in setting mode) - Manual ON / OFF (push during more than 1s when in RUN mode) - Push both to see the Nr of connected steps
⑨	SETUP KEY: Push during more than 1s to enter SETUP mode
⑩	Lagging current indication (Inductive load)
⑪	Leading current indication (Capacitive load)

➢ This manual is an easy guide for the use and operation of the **Computer max 6/max 12**. For more information, the complete manual can be downloaded from the web site of Circutor: **www.circutor.es**

Any manipulation or use of the equipment out of the conditions specified by the manufacturer may put in risk the user safety. Before any maintenance operation the equipment must be disconnected from power supply. In case of miss operation or protection fault the equipment must be disconnected from supply and remain out of service ensuring against any accidental reconnection.

1.- Regulator Connection

For proper operation it's necessary to install a current transformer, CT (normally In / 5 A), which primary must be sized according to the maximum expected load current in the installation.

The regulator supply (C-D terminals) must be taken between two phases and the CT should be located in the third phase. See technical characteristics for cable sizes and required protections.

Must use an switch or automatic switch for supply the regulator

The current transformer , CT, must be located so that it measures the whole load current plus the correction capacitors

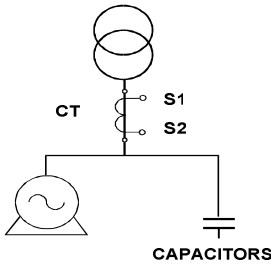

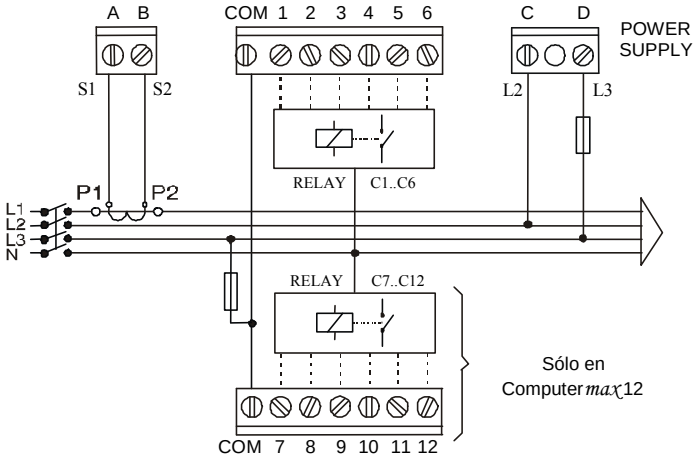

2.- TECHNICAL CHARACTERISTICS

Supply and V measurement input terminals (C-D)	480,400, 230 or 110 VAC +15% -10% ; 45-65 Hz , (see label) Connect preferably to phases L2-L3
Supply cables size and protection	Cross section 1,5mm² ; 0,5 to 2A Fuses gl type
Current measurement circuit	Current transformer (CT) , In /5 , Place preferably in phase L1 Minimum cabling cross section 2,5mm²
Current measurement margin	0,1 to 5 A (maximum overload +20%)
Accuracy of measurements	Voltage and current :1%; cosφ :2% ± 1 dígit
Power consumptions	110V: 7 VA (no load) ; 8 VA(6 relays); 9,8 VA(12 relays) 230V: 7 VA (no load) ; 8 VA(6 relays); 9,6 VA(12 relays) 400V: 6 VA (no load) ; 7,5 VA(6 relays); 9,5 VA(12 relays) 480V: 7,8 VA (no load) ; 8,6 VA(6 relays); 10 VA(12 relays)
Display	1 line x 3 digits x 7segments + 20 icons
Output Relay Contacts	Max. 250 VAC, 10 A, AC1
Output Relay Cabling and Protection	Cabling cross section 1,5mm² , Protection by means of a 6A circuit breaker (C curve) or by a 6A fuse (gl type)
Alarm Output Relay	Last relay automatically set as alarm output , if not in use
Compliant to the following Standards	EN 61010, EN 61000-3-2, EN 61000-3-3, EN 50081-2, EN 50082-1, EN 50082-2, EN 61000-4-2, EN 61000-4-4, EN 61000-4-8, EN 61000-4-5, EN 61000-4-11 , UL 94
Safety / Insulation	Category III , Class II, According to EN 61010-1,
Environment limit conditions	Temperature limits: -20ºC a +60ºC; Relative Humidity 95% (without condensation). Max. Altitude: 2000m
Protection degree	IP51 (panel mounted) IP30 (regulator box) , According to EN-60529
Control system	FCP (Minimum number of operations)

3.- Four Quadrants Operation

The **Computer max 6/ max 12** regulators operate in 4 quadrants (suitable for imported or exported active power). For exported power, a negative symbol is displayed in the cosφ indication. Check phase connection and setup if there is no exported energy and the indication is not correct (see 4.3, SET-UP - phase)

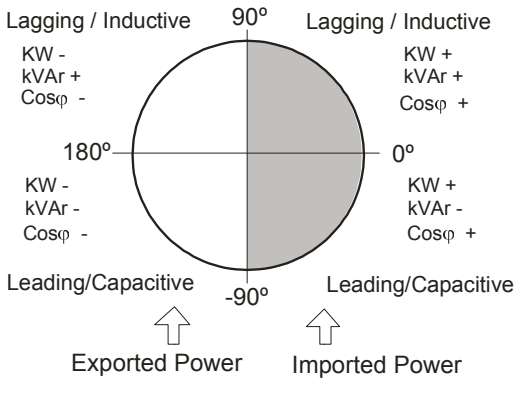

4.- SETUP AND MEASUREMENTS

To enter the SETUP mode, press the setup key (9), for more than 1s. If all the capacitors are disconnected, the access in immediate, otherwise a disconnection sequence starts and then accesses to setup menu. In the SETUP mode, if no key is pressed for 3 minutes, the equipment exits such mode and returns to normal operation mode.

	Key to access the SETUP mode: - Long push to enter and exit SETUP mode. Also DELETE max values when in the measuring mode - Short push: to change from display mode to edit mode and vice versa. If no key is pushed during more than 3 minutes, the regulator exits the SETUP mode without changing the setup.
:	Symbol showing which parameter is being displayed or edited.
	- In the display mode: Cursors to select an option. ► points to the option - In edit mode: Change a parameter value

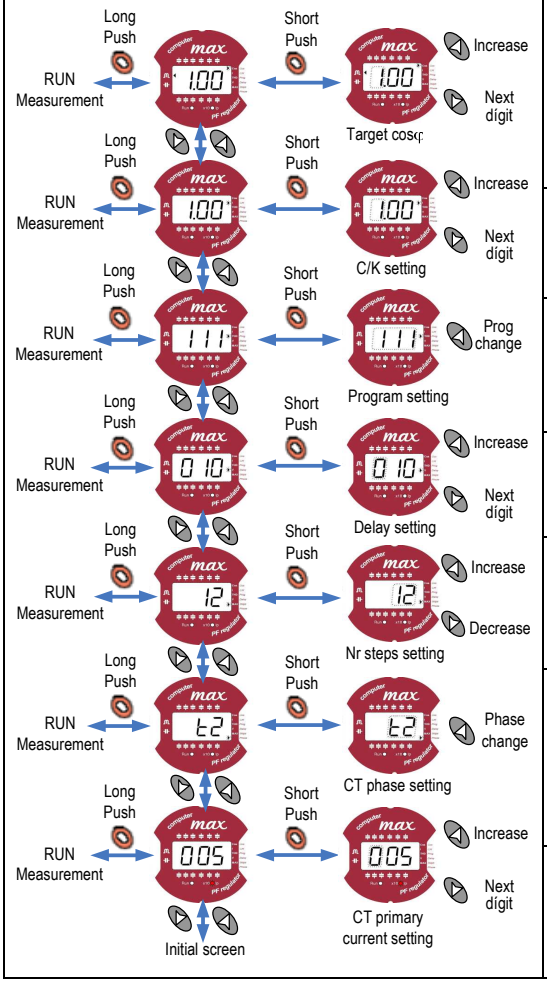

➢ 4.1.- RUN & Measuring mode

In normal operation mode (RUN mode) the regulator display may show different parameters (V, I, cosφ, etc.) The displayed parameter is pointed by the sign ► .

By default the regulator displays the cosφ, but pushing the keys the following parameters can be explored: Current (I), Current harmonics (THD), Mains Voltage (V), Maximum current (I MAX) y Maximum voltage (V MAX). If both keys are pushed simultaneously the regulator displays the Nr of connected steps.

A long push of key when maximum values are displayed causes de deletion of recorded max values.

➢ 4.2.- Program selection

This setting depends on the kvar ratio between the different capacitor steps. For instance if the bank is 10+20+20+20 kvar the program is 1:2:2:2, so the option 122 must be selected.

Display	Program	Display	Program
111	1:1:1:1	248	1:2:4:8
122	1:2:2:2	112	1:1:2:2
124	1:2:4:4		

➢ 4.3.- Selecting the CT connection phase

Choose among the options in the table depending on CT connection and the phases where V is measured. In normal installations (no exported energy) choose the option for which the displayed cosφ is between 0.7 Ind and 0.98 Cap.

Display	V-I phase shift at cosφ=1	Measuring phases for V	Phase where TC is connected
T1	30º	L3-L2	L3
T2	270º	L3-L2	L1
T3	150º	L3-L2	L2
T4	210º	L3-L2	L3 (CT reversed)
T5	90º	L3-L2	L1 (CT reversed)
T6	330º	L3-L2	L2 (CT reversed)

➢ 4.4.- Selecting the rated primary current of CT



If the LED is blinking indicates that we are in SETUP mode and adjusting primary CT current. When in RUN mode or when *Iprimary* is displayed, the LED indicates whether the displayed current has a scale factor x1 (LED OFF) or x10 (LED ON)

5.- Error Codes

ERR CODE	DISPLAY	DESCRIPCIÓN	ACTUACIÓN
E.01	All zeros	Load current below measuring threshold or CT not connected	Forces all the relays OFF
E.02	cos φ and E.02 alternate blinking	Overcompensation. The regulador is asking to disconnect Cs and they are all disconnected	NO ACTION
E.03	cos φ and E.03 alternate blinking	Sub-compensation. The regulator is asking for more Cs and they are all connected	NO ACTION
E.04	cos φ and E.04 alternate blinking	Over current. The current is + 20%. Above primary rated current	NO ACTION
E.05	cos φ and E.05 alternate blinking	Overvoltage. Voltage is +15%. Above rated voltage	NO ACTION

6.- C/K table depending on initial cosφ , desired cosφ and CT ratio

CT Ratio	Lower step reactive power (kvar) at 400V														
CT	2.5	5,00	7.5	10,0	12,5	15,0	20,0	25,0	30,0	37,5	40,0	50,0	60,0	75,0	80,0
150/5	0,12	0,24	0,36	0,48	0,60	0,72	0,96								
200/5	0,09	0,18	0,27	0,36	0,45	0,54	0,72	0,90							
250/5	0,07	0,14	0,22	0,29	0,36	0,43	0,58	0,72	0,87						
300/5	0,06	0,12	0,18	0,24	0,30	0,36	0,48	0,60	0,72	0,90	0,96				
400/5	0,05	0,09	0,14	0,18	0,23	0,24	0,36	0,48	0,58	0,67	0,72	0,87			
500/5		0,07	0,11	0,14	0,18	0,22	0,29	0,36	0,45	0,54	0,54	0,72	0,87		
600/5		0,06	0,09	0,12	0,15	0,18	0,24	0,30	0,36	0,45	0,48	0,60	0,72	0,90	0,96
800/5			0,07	0,09	0,11	0,14	0,18	0,23	0,27	0,33	0,36	0,45	0,54	0,68	0,72
1000/5			0,05	0,07	0,09	0,11	0,14	0,18	0,22	0,27	0,29	0,36	0,43	0,54	0,57
1500/5				0,05	0,06	0,07	0,10	0,12	0,14	0,18	0,19	0,24	0,29	0,36	0,38
2000/5						0,05	0,07	0,09	0,11	0,13	0,14	0,18	0,22	0,27	0,28
2500/5							0,06	0,07	0,09	0,10	0,12	0,14	0,17	0,22	0,23
3000/5							0,05	0,06	0,07	0,09	0,10	0,12	0,14	0,18	0,19
4000/5									0,05	0,06	0,07	0,09	0,11	0,14	0,14

For different voltages (V) of 400V, table result must be multiply for 400/V, or calculate C/K parameter using the expressions.

C/K calculation:

If It is the primary rated current of the CT and Ic the rated current of the lower capacitor step, the C/K must be set according to the calculations shown below:

$$\frac{It}{5} = K$$

$$I_C = \frac{Q}{\sqrt{3}.V}$$

Example : CT current ratio = 500/5
Lower step power: 60 kvar at 400V

$$K = \frac{500}{5} = 100; \quad I_C = \frac{60.000}{1{,}73 \times 400} = 86{,}7\,A$$

$$C/K = \frac{Ic}{K} = \frac{86{,}7}{100} = 0{,}867$$

$$C/K = \frac{Ic}{K}$$

7.- Technical Service

For any inquiry about the regulator operation or in case of malfunction, see detailed manual at www.circutor.es or contact with technical service.

Circutor SÁ.
Vial Sant Jordi, s/n
08232 - Viladecavalls
TEL - 93 745 29 00 & fax - 93 745 29 14
E-mail : central @ circutor.es