Combines 3070

联合收割机

PARTS CATALOG
COMBINES 3070
联合收割机零件图册
PCYC20464 Issue Jan.2009

约翰·迪尔佳联收获机械有限公司
John Deere Jiamusi Works
中英文版本 Chinese and English edition
PRINTED IN CHINA

主　　编：庞凤斌

副 主 编：方宇鹏　王洪源

责任编辑：孙　玲

编　　著：（按姓氏笔画排序）

王振发　　任宝国　　刘金亮　　孙桂芹　　肖圣春

李庆章　　李　彦　　李全福　　袁兆华　　徐伟城

曹春玲　　韩　滨

校　　审：王洪源　　韩　滨

简　　介

尊敬的用户，约翰·迪尔佳联收获机械有限公司衷心感谢您对本公司产品的关心和厚爱，祝您和贵单位兴旺发达，事业顺利。

3070 谷物联合收割机是约翰·迪尔佳联收获机械有限公司通过多年来的生产经验和用户不断变化的需求在引进迪尔公司技术的基础上独立研制开发的新机型。该机是联产承包后，收获一家一户稻麦的理想机型。其主要特点是，脱分功能由切流与横轴流组合式脱粒分离装置完成，摒弃了体积大、结构复杂的传统式逐稿器，因此该机型体积小，结构简单，机动性强，可靠性高。清选装置采用双层鱼鳞筛往复运动，清选面积较同类机型大，清选效果好，另外该机广泛采用轻型汽车和农用运输车的转向、挂档、电气、液压原件，操纵舒适方便。为了适应不同用户要求，我公司为用户提供了多种配置方案，脱粒滚筒有纹杆式和钉齿式两种；割台有 2.75 米和 2.5 米两种及大豆挠性割台；卸粮装置有简易卸粮筒、标准卸粮筒和加长标准卸粮筒三种可供用户选用；行走装置可提供标准轮胎和防陷轮胎两种型式；为适应水田陷地作业，配备了后轮驱动以提高田间通过能力，适应性强。该机型大量采用了本厂 3060 和 1000 系列联合收割机的零部件，便于用户购买配件和维修。

用户在使用本产品前应仔细阅读与产品有关的零件图册、技术手册和操作说明，按照技术要求进行安装、操作、调试、维护和保养，以保证按照要求使用，确保人身安全、避免机械故障、延长使用寿命、节省能源和维护费用，获得最大的经济效益。

由于技术进步和用途的拓展，约翰·迪尔佳联收获机械有限公司生产的系列产品在技术规格、结构、配套、附件等方面将会有改进和变化，将在再版时予以修改。由于编写者水平有限，书中错误在所难免，请用户指正。另外由于编译、印刷、校正等诸多方面的原因，本手册虽经多次校正，其中仍不免有错误之处，还望广大用户在使用过程中如发现错误，及时通知我们，以便再版时更正。

未经约翰·迪尔佳联收获机械有限公司同意，任何人不得擅自将本图册进行翻印、出版，本公司明确保留按照法律规定有关版权的要求，保留更改权利。

2009 年 1 月

零件图册使用说明：

A. 如何查找零件件号：

(1) 先在总体索引中按照首字母 A、B、C……Z 的顺序找到所要查找的部分名称

(2) 根据部分名称找到指定的页号

(3) 按指定的页号找到零件的轴测图和表

(4) 根据轴测图和表确定零件号

B. 如何按零件号查找零件

(1) 翻到零件图册最后的件号索引部分

(2) 找到零件号所在的页号

(3) 按照页号找到轴测图及表

(4) 根据轴测图及表找到所需零件

零件图册表格部分由七列组成：

序　号:图面上标注的零件数字号

件　号：零件订购号码

名　称：简要的零件描述

数　量：这个零件在本装配中使用的总数量

系列号：－×××××××，零件用于这个系列号之前的所有机器上

×××××××－，零件用于这个系列号之后的所有机器上

×××××××－×××××××，零件用于两个系列号之间的所有机器上

机　型：3070WL－－配套一拖（洛阳）柴油机

3070WW－－配套广西玉柴发动机

标注“ × ”符号表示这个件号用于此机型上

备　注：附加信息，如尺寸、规格、装配信息、编码和注释等

方向：右侧和**左侧**是根据面向机器的前进方向而制定的。

Directions for use of parts catalog

A How do you find a part, if Part Number is not known?

1. Turn to Primary Index, according to A,B,C,… …Z sequence determine required Section
2. Decode Section Number to corresponding page
3. Turn to relevant page for these components
4. Identify part on drawing and determine Part Number in text with help of drawing key number

B How do you identify a part , if Part Number is known?

1. Turn to Numerical Index at end of catalog
2. Locate Part Number and determine page location
3. Turn to relevant page in Parts Catalog
4. Identify part on corresponding drawing

Layout of text page with seven columns

KEY：Drawing Reference Number

PART NO.**:** Parts ordering No.

DESCRIPTION**:** Brief part description

QTY**:** Total no. of this part used in this assembly

SERIAL NO.**:** Hyphen before Ser. No.=part used up to Serial No. shown

Hyphen after Ser. No.=part used in and after Ser. No. shown

Hyphen between two Ser. No.'s=used from-to Ser. No.'s shown

MODELS：Marked to show for which model this part applies

REMARKS：Added information, such as dimensions, assy. remarks, substitutes and coded order information

RIGHT-HAND AND LEFT-HAND sides are determined by facing in the direction of forward travel.

Coded notes used when ordering spare parts: 当订购配件时使用下面的编码注释：

As required AR 按需	Kit KIT 组件	Or OR 或	Upper UP 上
Complete assembly ASSY 总成	Number of links L 链节数	Order ORD 定购	With W/ 与...一起
For FOR 用于	Length LGTH 长度	By package of PACKG 打包	Without W/O 没有
Front FRONT 前	Left-hand L.H. 左侧	Right-hand R.H. 右侧	Gear and sprocket teeth number Z 齿轮和链轮齿数
See page GRID 见...页	Lower LOW 下	Rear REAR 后	
Inside diameter I.D. 内径	Not supplied separately NSEP 不单独提供	Substitute for SUB.FOR 替代	
Including keys INCL.KEYS 包含序号	Outside diameter O.D. 外径	Thickness TK 厚度	

总体索引

名　　称	页　号		名　　称	页　号
A			后桥支架	60-5
凹板	110-5		后桥支架	60-6
B			后桥支架	140-7
变速操纵	90-19		后桥总成(后轮驱动)	140-17
变速箱齿轮	50-11		后桥总成(后轮驱动)	140-19
变速箱壳体装配	140-23		后尾罩	80-11
变速箱小制动器	50-17		后转向轮	60-7
拨禾轮提升油缸、右侧	70-9		J	
C			机架盖板	80-5
操纵杆	140-1		驾驶室	90-1
操纵杆	140-3		驾驶台	90-9
承种盘	110-31		驾驶座	90-5
承种盘传动轴	110-41		减速箱齿轮	140-11
传动轴总成	140-13		简易卸粮筒	120-25
D			搅龙	110-15
钉齿滚筒	110-7		搅龙壳体	120-1
定刀及连接件	130-7		K	
动力输出皮带轮	30-11		空滤器装配	30-3
F			L	
发动机电器元件及电路联结	40-3		离合器	50-5
发动机支架	30-1		离合器与刹车操纵杆	90-15
分离滚筒	110-9		离合器与刹车操纵杆	90-17
风扇	110-29		连接法兰总成	140-15
风扇壳体	110-27		连接架	140-9
副驾驶座	90-7		粮食升运器端头	120-5
G			粮箱	120-11
盖板	110-11		粮箱搅龙	120-15
割台提升油缸	70-15		粮箱零件	120-13
滚筒传动	110-3		Q	
滚筒壳体与凹板	110-13		前盖板	110-17
H			前轮	50-19
后盖板	110-19		前桥	50-8
后轮	140-6		切碎器安装	130-1
后桥	60-1		切碎器安装	130-5
后桥 V 型拉杆	60-2		切碎器转子	130-3
后桥连接架	140-5		S	

总体索引

名　　称	页　号		名　　称	页　号
散热器	30-9		Z	
筛箱	110-33		杂余升运器	120-7
筛箱曲柄连杆机构	110-43		杂余升运器端头	120-9
筛箱支杆	110-39		张紧轮	110-49
输送器	100-3		支架	80-13
输送器护罩	100-5		支架	140-10
输送器壳体	100-1		制动毂装配	140-16
W			制动器	140-16
纹杆滚筒	110-1		主传动	110-21
X			主传动离合器	110-23
卸粮搅龙	120-19		转向舵柱和方向盘	90-11
卸粮搅龙传动	120-21		转向拉杆总成	60-3
卸粮离合器	120-17		转向油缸	70-13
卸粮筒支架	120-23		转子传动	130-9
行走皮带张紧机构	50-3		籽粒筛与滑板	110-35
行走无级变速器	50-1		籽粒升运器	120-3
蓄电池	40-1		左侧壁	80-3
旋转滤网	30-5		左侧操纵杆	90-13
旋转滤网传动	30-7		左侧传动	110-45
Y			左侧护罩	80-7
液压泵支架	70-19		左侧中间轴传动张紧机构	110-25
液压管路（拨禾轮油缸）	70-5			
液压管路（割台提升油缸）	70-11			
液压管路（行走变速）	70-7			
液压管路（油箱、泵、控制阀）	70-3			
液压管路（转向系统）	70-1			
液压管路(转向系统)	140-25			
液压油箱	70-17			
仪表盘	90-3			
仪表盘电器元件及电路联结	40-5			
颖壳筛	110-37			
油门控制杆件	30-15			
油箱	30-13			
右侧壁	80-1			
右侧传动	110-47			
右侧罩板	80-9			

PRIMARY INDEX

DESCRIPTION	PAGE		DESCRIPTION	PAGE
A			FEEDER CONVEYOR GUARDS	100-5
AIR CLEANER ASSY.	30-3		FEEDER CONVEYOR HOUSING	100-1
ASSISTANT OPERATOR ' S SEAT	90-7		FLANGE ASSEMBLY	140-15
B			FLOOR PANELS ENGINE COMPARTMENT	80-5
BATTERY	40-1		FRONT AXLE	50-8
BRACKET	80-13		FRONT WHEELS	50-19
BRAKE	50-15		FUEL TANK	30-13
BRAKE HUB ASSEMBLY	140-16		G	
BRAKE-TRANSMISSION	50-17		GEAR SHAFTING PARTS	90-19
C			GRAIN ELEVATOR	120-3
CAB	90-1		GRAIN PAN	110-31
CHAFFER	110-37		GRAIN PAN SHAFT AND SUPPORT	110-41
CHOPPER MOUNTING ASSEMBLY	130-1		GRAIN TANK	120-11
CHOPPER MOUNTING ASSEMBLY	130-5		GRAIN TANK UNLOADING AUGER	120-15
CLEANINGSHOE SUSPENSION	110-39		GRAIN TANK ASSEMBLY PARTS	120-13
CLUTCH	50-5		GRAIN TANK UNLOADING	120-19
CLUTCH AND BRAKE LEVER	90-15		GRAIN TANK UNLOADING DRIVE	120-17
CLUTCH AND BRAKE LEVER	90-17		GRAIN TANK UNLOADING DRIVE	120-21
CONCAVE FOR WHEAT	110-5		GUARD LEFT HAND	80-7
COUNTER KNIVES-ATTACHING PARTS	130-7		GUARD-RIGHT HAND	80-9
COVER	110-11		H	
CUTTERHEAD ROTOR	130-3		HOLDER	140-10
CYLINDER DRIVE	130-9		HYDRAULIC LINE	70-7
CYLINDER COVER	110-17		HYDRAULIC LINE	70-11
CYLINDER DRIVE	110-3		HYDRAULIC LINE	140-25
CYLINDER HOUSING AND CONCAVE	110-13		HYDRAULIC LINE(RESERVOIR,PUMP,CONTROL VALVE)	70-3
D			HYDRAULIC LINES	70-5
DACHBOARD PANEL-SISCONNECT PLUG	40-5		HYDRAULIC LINES(STEERING)	70-1
DRIVE CLUTCH	110-23		HYDRAULIC OIL RESERVOIR	70-17
E			I	
ELECTRICAL PARTS-DISCONNECT PLUG	40-3		IDLER	110-49
ENGINE SUPPORT	30-1		JOINTED SHAFT ASSEMBLY	140-13
F			L	
FAN HOUSING	110-27		LEFT HAND SHIFT LEVERS	90-13
FAN WITH SHAFT AND DEFLECTORS	110-29		LEFT TIGHTEN MECHANISM	110-25
FEEDER CONVEYOR	100-3		LEFT-HAND DRIVE	110-45

PRIMARY INDEX

DESCRIPTION	PAGE		DESCRIPTION	PAGE
LOWER CHAFFER BOARD	110-33		SIDE PANEL LEFT HAND	80-3
M			SIDE PANEL RIGHT HAND	80-1
MOTOR PULLEY ASSEMBLY	30-11		SIMPLE GRAIN TANK UNLOADING	120-25
O			SPIKE TOOTH CYLINDER FOR RICE	110-7
OPERATOR'S PLATFORM	90-9		SPINDLE KNUCKLE	60-3
OPERATOR'S SEAT	90-5		STEERING CYLINDER	70-13
P			STEERING SHAFT AND COLUMN	90-11
PLATFROM LIFT CYLINDER	70-15		SUPPORT	70-19
POSI-TORQUE DRIVE	50-1		SUPPORT BRACKET	140-9
PRIMARY DRIVE	110-21		T	
R			TAILINGS AND CLEAN GRAIN AUGER HOUSING	120-1
RADIATOR	30-9		TAILINGS ANDCLEAN GRAIN AUGER	110-15
RASP BAR CYLINDER FOR WHEAT	110-1		TAILINGS ELEVATOR	120-7
REAR AXLE	60-1		THROTTLE AND ENGINE SHUT-OFF LINKAGE	30-15
REAR AXLE ASSEMBLY (RWD)	140-17		TIGHTEN MECHANISM	50-3
REAR AXLE ASSEMBLY (RWD)	140-19		TRANSMISSION CASES	50-11
REAR AXLE HOLDER	60-5		TRANSMISSION GEARS	140-11
REAR AXLE HOLDER	60-6		TRANSMISSION SHELL ASSEMBLY	140-23
REAR AXLE HOLDER	140-7		U	
REAR AXLE SUPPORT BRACKET	140-5		UNLOADING SUPPORT	120-23
REAR AXLE—SUPPORT	60-2		UPPER PART OF GRAIN ELEVATOR	120-5
REAR COVER	110-19		UPPER PART OF TAILINGS ELEVATOR	120-9
REAR GUARD	80-11			
REAR TIRE	140-6			
REAR WHEELS WITH HUB	60-7			
REEL LIFTINGCYLINDER, RIGHT-HAND	70-9			
RETURN PAN WITH SIEVES	110-35			
RIGHT-HAND DRIVE	110-47			
ROTARY RADIATOR SCREEN	30-5			
ROTARY RADIATOR SCREEN DRIVE	30-7			
S				
SEPARATING CYLINDER	110-9			
SHIFT CONSOLE	90-3			
SHIFT LEVERS	140-1			
SHIFT LEVERS	140-3			

ENGINE SUPPORT
发动机支架

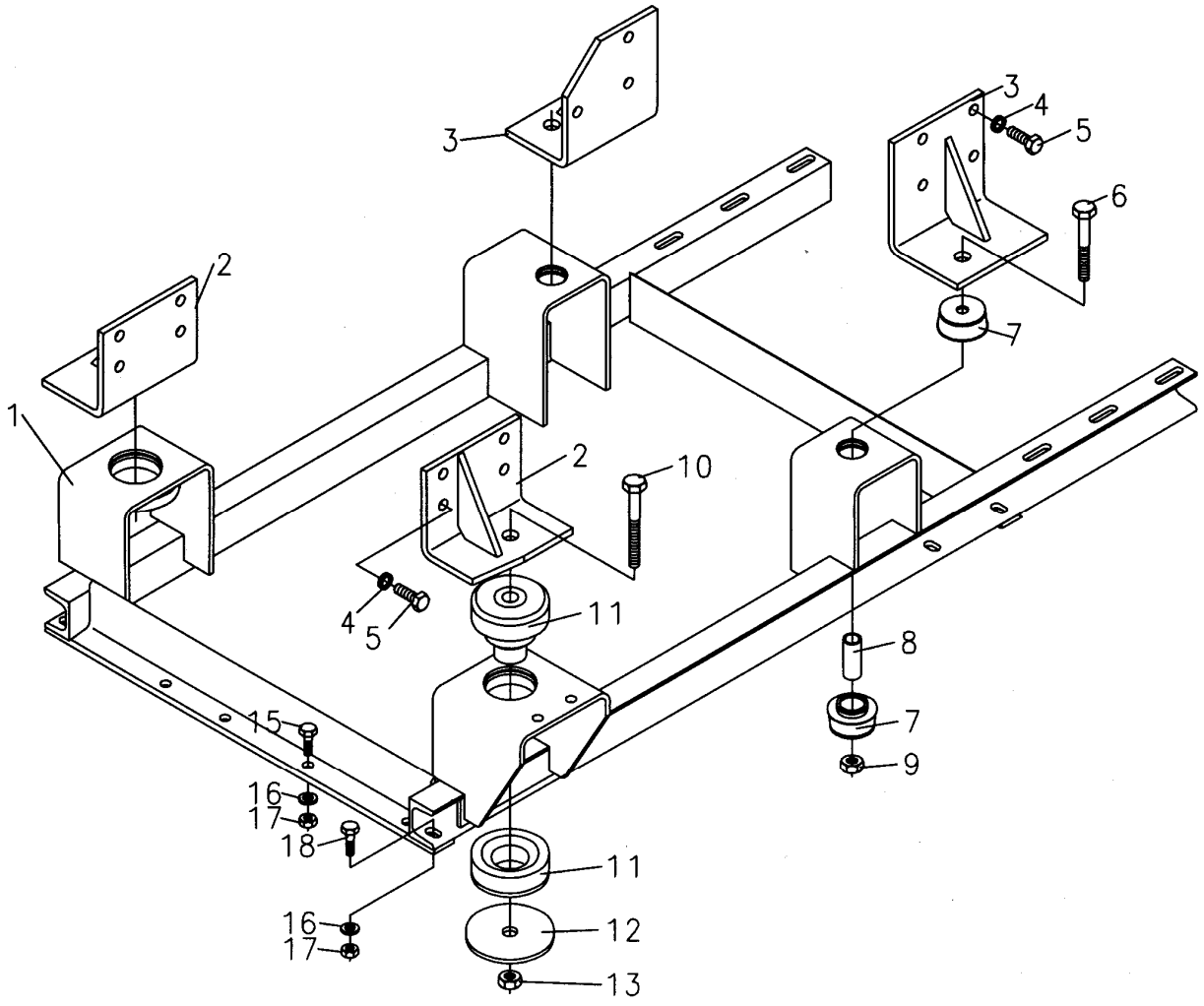

序号	件　号			数量		MODELS		备　　注
						330700W	330700W	
KEY	PART NO.	名　　称	DESCRIPTION	QTY	SERIAL NO.	L	Y	REMARKS
1	AS39475	发动机机架焊合	SUPPORT	1			×	
	AYC11488	发动机机架焊合	SUPPORT	1		×		
2	AS39101	后端右支座	HOLDER	1			×	
	AS39103	后端左支座	HOLDER	1			×	
	AYC10495	后支座焊合	HOLDER	2		×		
3	AS39102	前端右支座	HOLDER	1			×	
	AS39104	前端左支座	HOLDER	1			×	
4	12M7014	弹簧垫圈	LOCK WASHER	16		×	×	12 GB93-87 Zn.D
5	19M7285	螺栓	CAPSCREW	16		×	×	M12X30 GB5783-86 8.8 Zn.D
6	19M7216	螺栓	CAPSCREW	2		×		M12x100 GB5782-86 8.8Zn.D
	19M7189	螺栓	CAPSCREW	2			×	M12x80 GB5782-86 8.8Zn.D
7	AYC10498	前端减震垫	BUMPER	4		×	×	
8	YC11672	间管	SPACER	2		×	×	
9	14G25122	螺母	LOCK NUT	2		×	×	M12 GB889-86 8 Zn.D
10	19G02659	螺栓	CAPSCREW	2		×	×	M16x115GB5782-86 8.8 Zn.D
11	AYC10499	后端减震垫	BUMPER	2		×	×	
12	YC11668	垫	WASHER	2			×	
	YC11668	垫	WASHER	4		×		
13	14G25162	螺母	LOCK NUT	2		×	×	M16 GB889-86 8 Zn.D
15	19M7168	螺栓	CAPSCREW	6		×	×	M10x30 GB5783-86 8.8 Zn.D
16	12M7013	弹簧垫圈	LOCK WASHER	10		×	×	10 GB93-87 Zn.D
17	14M7140	螺母	NUT	10		×	×	M10 GB6170-86 8 Zn.D
18	19M7382	螺栓	CAPSCREW	4		×	×	M10x40 GB5783-86 8.8 Zn.D
19	YC11673	间管	SPACER	2		×		

AIR CLEANER ASSY.
空滤器装配

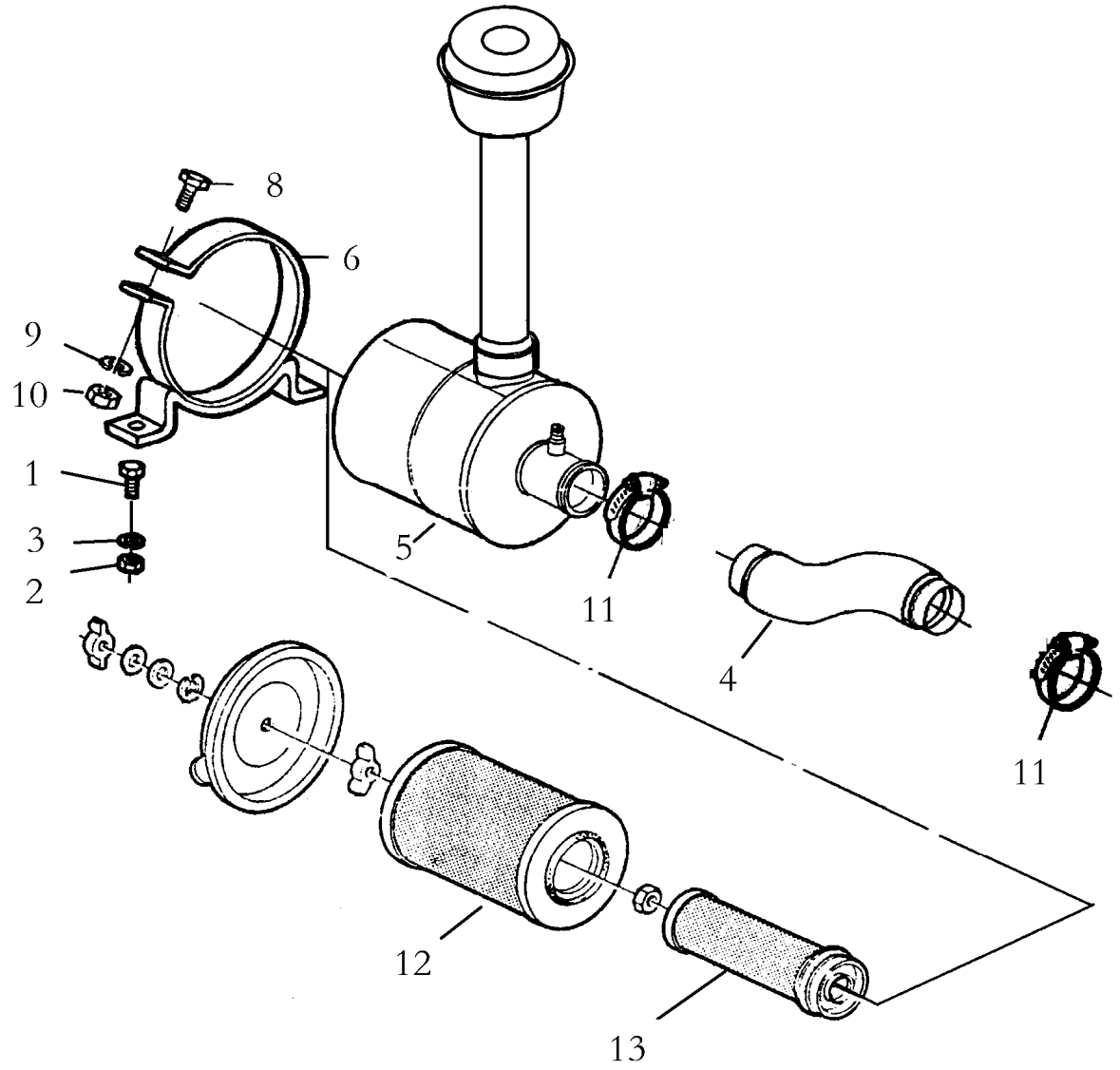

序号	件　号			数量		MODELS		备　　注
						3	3	
						0	0	
						7	7	
						0	0	
						W	W	
KEY	PART NO.	名　　称	DESCRIPTION	QTY	SERIAL NO.	L	Y	REMARKS
1	19G08425	螺栓	CAP SCREW	4		×	×	M8x25 GB5783-86 8.8 Zn.D
2	14G00082	螺母	NUT	4		×	×	M8 GB6170-86 8 Zn.D
3	12G45008	弹簧垫圈	LOCK WASHER	4		×	×	8 GB93-87 Zn.D
4	YC11651	进气管	HOSE	1		×		
	S39508	进气管	HOSE	1			×	玉柴厂家自带
5	AYC10497	空滤器	AIR CLEANER	1		×	×	
6	AYC10494	支架	HOLDER	2		×	×	
8	19M7296	螺栓	CAP SCREW	2		×	×	M8x100 GB5782-86 8.8 Zn.D
9	24M7207	平垫	WASHER	2		×	×	8 GB96-85 Zn.D
10	14M7307	螺母	NUT	2		×	×	M8 GB889-86 8 Zn.D
11	YC17336	软管夹子	CLAMP	4		×	×	Φ76－Φ92
	YC17336	软管夹子	CLAMP	2		×	×	Φ76－Φ92
12	AS40921	主滤芯	MINE ELEMENT	1		×	×	
13	AS40922	安全滤芯	SAFE ELEMENT	1		×	×	

ROTARY RADIATOR SCREEN
旋转滤网

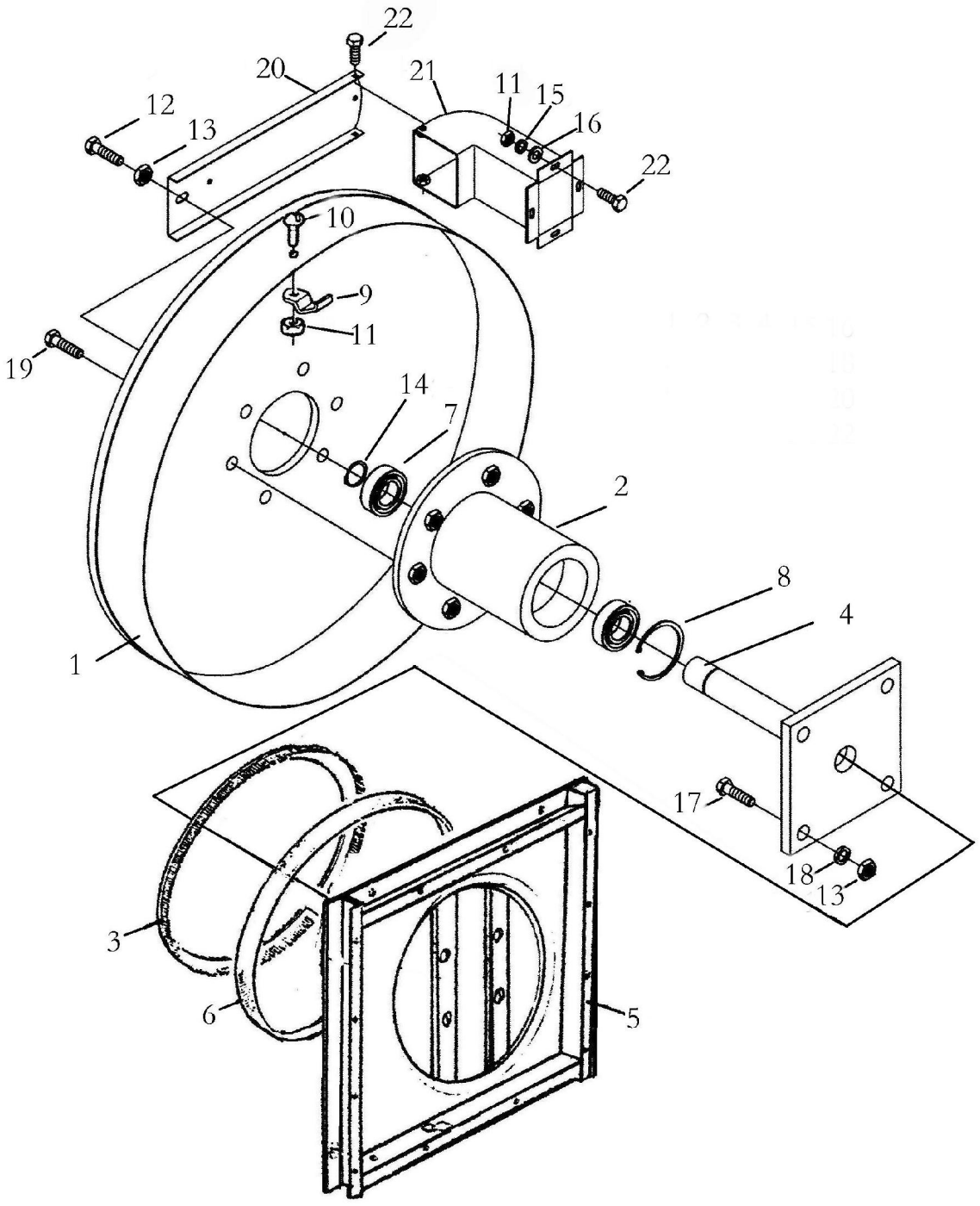

序号 KEY	件　号 PART NO.	名　称	DESCRIPTION	数量 QTY	SERIAL NO.	MODELS 330700WL	MODELS 330700WY	备　注 REMARKS
1	AYC10871	网罩焊合	SCREEN	1		×	×	
2	AYC10870	轴承架焊合	SUPPORT	1		×	×	
3	AZ21454	毛刷	BRUSH	1		×	×	
4	AYC10872	轴座焊合	SUPPORT	1		×	×	
5	AYC10873	框架	FRAME	1		×	×	
6	Z39668	密封环	GASKET	3		×	×	
7	00G180203	轴承	BEARING	2		×	×	180203 GB279-88
8	40M1823	挡圈	SNAP RING	1		×	×	17 GB894.1-86 Zn.D
9	Z38597	压板	CLAMP	12		×	×	
10	21M7280	螺钉	CAP SCREW	12		×	×	M6X20 GB67-85 4.8 Zn.D
11	14M7027	螺母	NUT	17		×	×	M6 GB6170-86 8 Zn.D
12	19M7301	螺栓	CAP SCREW	1		×	×	M8X40 GB5783-86 8.8 Zn.D
13	14M7029	螺母	NUT	11		×	×	M8 GB6170-86 8 Zn.D
14	40G00040	挡圈	SNAP RING	1		×	×	40 GB893.1-86 Zn.D
15	12M7116	弹簧垫圈	LOCK WASHER	17		×	×	6 GB93-87 Zn.D
16	24M7139	平垫	WASHER	27		×	×	6 GB96-85 Zn.D
17	19M7163	螺栓	CAP SCREW	4		×	×	M8X25 GB5783-86 8.8 Zn.D
18	12M7008	弹簧垫圈	LOCK WASHER	10		×	×	8 GB93-87 Zn.D
19	19M7139	螺栓	CAP SCREW	6		×	×	M8X20 GB5783-86 8.8 Zn.D
20	YC16856	吸风板	SHEET	1		×	×	
21	AYC10901	吸尘口焊合	NOZZLE	1		×	×	
22	19M7077	螺栓	CAP SCREW	5		×	×	M6X20 GB5781-86 4.8 Zn.D

ROTARY RADIATOR SCREEN DRIVE
旋转滤网传动

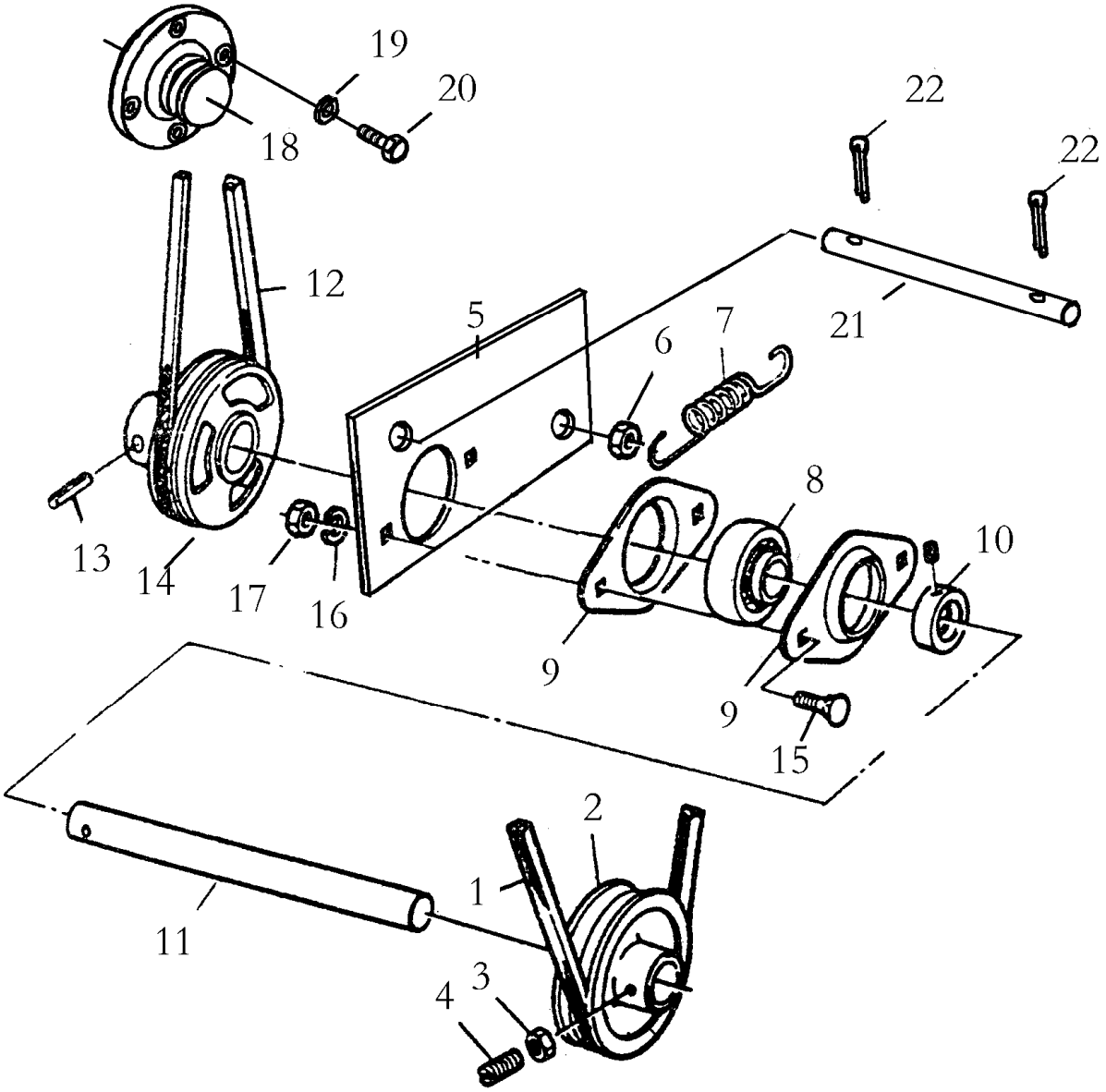

序号 KEY	件　号 PART NO.	名　称	DESCRIPTION	数量 QTY	SERIAL NO.	MODELS 330700W L	MODELS 330700W Y	备　注 REMARKS
1	YC12574	皮带	BELT	1		×	×	
2	YC11968	皮带轮	PULLEY	1		×	×	
3	14M7029	螺母	NUT	1		×	×	M8 GB6170-86 8 Zn.D
4	22G36420	螺钉	BOLT	1		×	×	M8X20 GB84-88 33H Zn.D
5	YC12882	支承板	SUPPORT PLATE	2		×	×	
6	14G25102	螺母	NUT	2		×	×	M8 GB889-86 8 Zn.D
7	Z21232	拉紧弹簧	SPRING	1		×	×	
8	00G390203	轴承	BEARING	2		×	×	390203 GB3882-87
9	YC16822	轴承盖	PRESSED FLANGED HOUSING	4		×	×	
10	00GP503	偏心套	ECCENTRIC LOCKING	2		×	×	P503 GB3882-87
11	YC12970	中间轴	SHAFT	1			×	
	YC14413	中间轴	SHAFT	1			×	
12	YC19018	皮带	BELT	1		×	×	
13	34G00530	弹性销	SPRINGPIN	1		×	×	5X30 GB879-86
14	Z10818	皮带轮	PULLEY	1		×	×	8 GB93-87 Zn.D
15	03G20220	螺栓	BOLT	4		×	×	M6X20 GB14-88 4.6 Zn.D
16	12M7116	弹簧垫圈	LOCK WASHER	4		×	×	6 GB93-87 Zn.D
17	14M7027	螺母	NUT	4		×	×	M6 GB6170-86 8 Zn.D
18	S10644	小皮带轮	PULLEY	1			×	
	YC11970	小皮带轮	PULLEY	1		×		
19	19M7167	螺栓	BOLT	4		×	×	M10X25 GB5783-86 8.8 Zn.D
20	12M7013	弹簧垫圈	LOCK WASHER	4		×	×	10 GB93-87 Zn.D
21	YC12879	销轴	SFAFT	1		×	×	
22	11G01720	销	COTTER PIN	2		×	×	3X20 GB91-86 Zn.D

RADIATOR
散热器

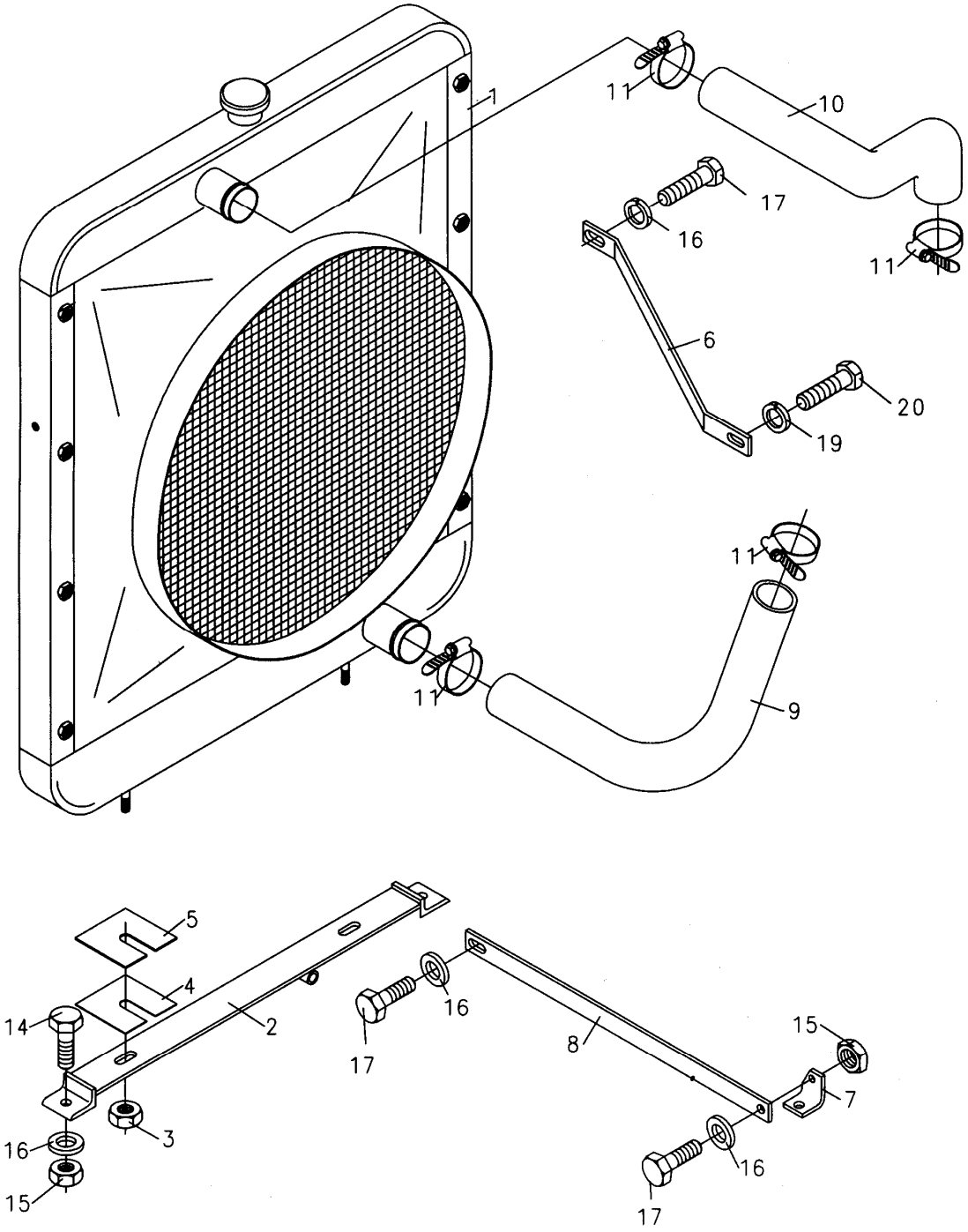

序号	件　号			数量		MODELS 3 0 7 0 W L	3 0 7 0 W Y	备　　注
KEY	PART NO.	名　　称	DESCRIPTION	QTY	SERIAL NO.			REMARKS
1	AYC10492	水箱	RADIATOR	1		×	×	
2	AS41945	水箱支座	HOLDER	1			×	
	AYC11497	水箱支座	HOLDER	1		×		
3	14G25122	螺母	LOCK NUT	2		×	×	M12 GB889-86 8 Zn.D
4	YC14396	调整垫	ADJUST	2		×	×	
5	S39797	调整垫	ADJUST	2		×	×	
6	S41951	拉杆	STRAP	1			×	
	YC12972	拉杆	STRAP	1		×		
7	YC11656	支架	HOLDER	1		×		
	S29463	支架	HOLDER	1			×	
8	S41952	拉杆	STRAP	1			×	
	YC12971	拉杆	STRAP	1		×		
9	S39513	下水管	HOSE	1			×	玉柴厂家自带
	YC11653	下水管	HOSE	1		×		
10	S39512	上水管	HOSE	1			×	
	YC11652	上水管	HOSE	1		×		
14	19M7169	螺栓	CAPSCREW	2		×	×	M10x35 GB5783-86 8.8 Zn.D
15	14M7140	螺母	NUT	3		×	×	M10 GB6170-86　8 Zn.D
16	12M7013	弹簧垫圈	LOCK WASHER	5		×	×	10 GB93-87 Zn.D
17	19M7166	螺栓	CAPSCREW	2		×	×	M10x20 GB5783-86 8.8 Zn.D
18	19M7268	螺栓	CAPSCREW	1		×	×	M12x25 GB5783-86 8.8 Zn.D
19	12M7014	弹簧垫圈	LOCK WASHER	1		×	×	12 GB93-87 Zn.D

MOTOR PULLEY
动力输出皮带轮

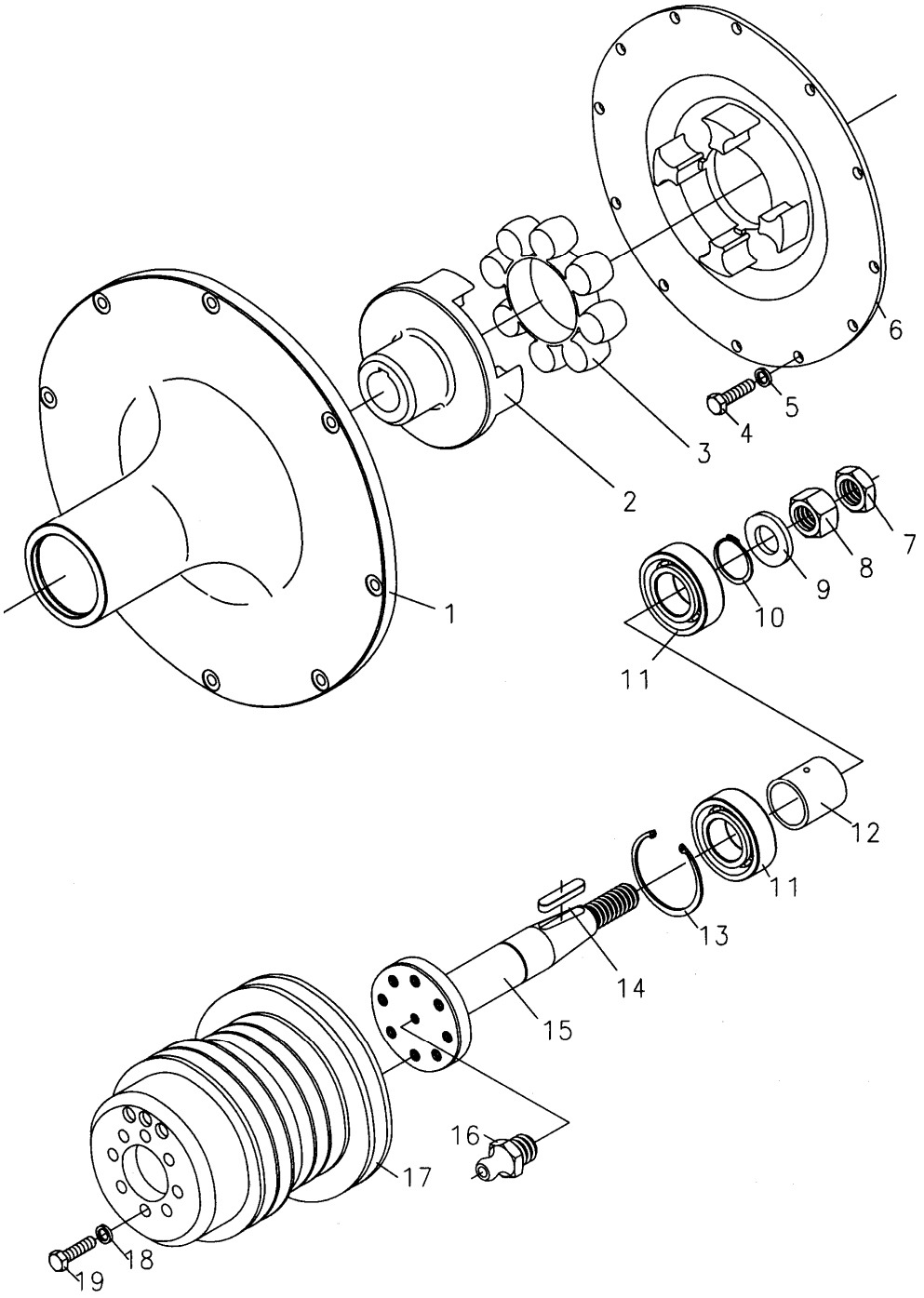

序号 KEY	件　号 PART NO.	名　　称	DESCRIPTION	数量 QTY	SERIAL NO.	MODELS 3070WL	MODELS 3070WY	备　　注 REMARKS
	AS30414	动力输出端总成	MOTOR ASSEMBLY	1			×	
	AYC11489	动力输出端总成	MOTOR ASSEMBLY	1		×		
1	YC11978	3060W 壳体	COVER	1			×	
	YC11661	3060WLL 壳体	COVER	1		×		
2	YC12703	3060WL 半联轴器	DISK	1			×	
	YC11660	半联轴器	DISK	1		×		
3	YC16321	MT7-C 弹性元件	SPRINGPART	1			×	
	D41552	弹性元件	SPRINGPART	1		×		
4	19M7167	螺栓	SCREW	12		×	×	螺栓 M10×25GB5783-86 8.8Zn.D
5	12M7013	弹簧垫圈	WASHER	12		×	×	垫圈 10GB93-87Zn.D
6	YC12701	法兰连接盘	DISK	1			×	
	YC11662	法兰连接盘	DISK	1		×		
7	14G03279	螺母	NUT	1		×	×	螺母 M27×2GB6173-86Zn.D
8	14G01272	螺母	NUT	1		×	×	螺母 M27×2GB6171-86Zn.D
9	YC14414	挡圈	SNAP RING	1			×	
	YC11664	挡圈	SNAP RING	1		×		
10	40G02045	挡圈	SNAP RING	1		×	×	
11	00G6209	轴承	BEARING	2		×	×	轴承 6209-RS GB/T276-94
12	YC12704	间管	SPACER	1		×	×	
13	40G00082	挡圈	SNAP RING	1		×	×	
14	49G00752	键	SHAFT KEY	1		×	×	
15	YC12702	轴	SHAFT	1			×	
	YC11663	轴	SHAFT	1		×		
16	58G21010	油杯	LUBRICATION FITTING	1		×	×	
17	S10213	皮带轮	PULLEY	1			×	
	YC12049	皮带轮	PULLEY	1		×		
18	12M7014	垫圈	WASHER	8		×	×	垫圈 12 GB93-87 Zn.D
19	19M7387	螺栓	SCREW	1		×	×	螺栓 M12×40GB5783-86 8.8 Zn.D

FUEL TANK
油箱

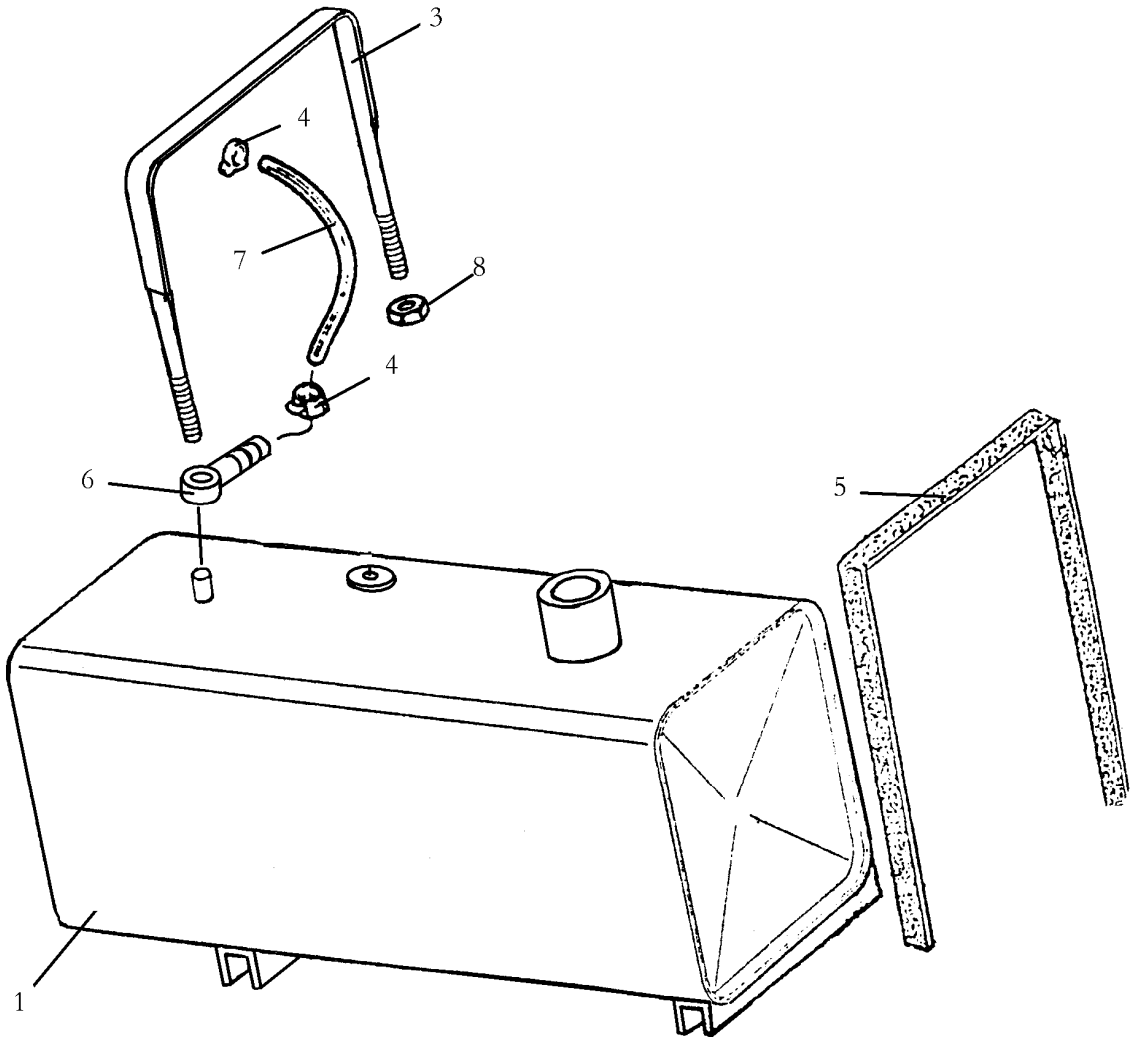

序号	件　号			数量		MODELS		备　　注
						3	3	
						0	0	
						7	7	
						0	0	
						W	W	
KEY	PART NO.	名　　称	DESCRIPTION	QTY	SERIAL NO.	L	Y	REMARKS
1	AYC10898	燃油箱	FUEL TANK	1		×	×	
3	AYC10900	油箱拉带	BAND	2		×	×	
4	YC13986	喉箍	CLAMP	1			×	Φ6.5—Φ12
5	YC11650	胶带	BUMPER	2		×	×	
6	YC14980	接头	TIE-IN	1		×		
7	YC14457	燃油管	HOSE	2.26M			×	Φ7.5
8	14M7140	螺母	NUT	8		×	×	M10 GB6170-86 8 Zn.D

THROTTLE AND ENGINE SHUT-OFF LINKAGE
油门控制杆件

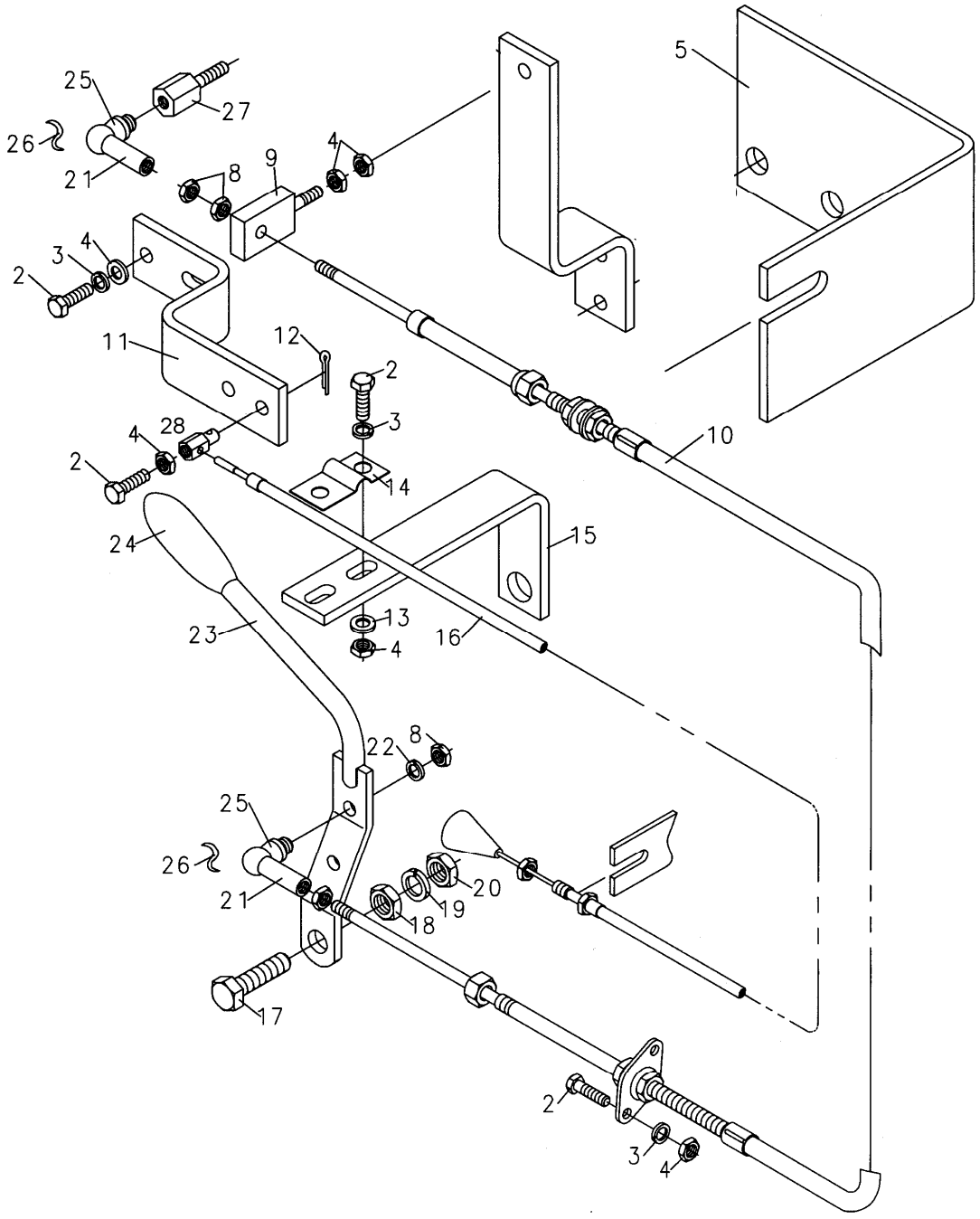

序号 KEY	件　号 PART NO.	名　称	DESCRIPTION	数量 QTY	SERIAL NO.	MODELS 3070L	MODELS 3070W	备　注 REMARKS
2	19G52118	螺栓	CAP SCREW	6		×	×	M6X18 GB5781-2000 4.8Zn.D
3	12M7116	弹簧垫圈	LOCK WASHER	5		×	×	6 GB93-87 Zn.D
4	14M7027	螺母	NUT	6		×	×	M6 GB6170-86 8 Zn.D
5	S29462	油门支架	BRACKET	1			×	
	YC14305	油门支架	BRACKET	1		×		
8	15G14050	螺母	NUT	3		×	×	M5 GB41-86 5 Zn.D
9	YC11410	销轴	PIN	1			×	
10	AYC11410	油门软轴	PULL PUSH CABLE	1		×	×	
11	YC14449	闭车拉杆	STRAP	1		×		
13	24M7054	垫圈	WASHER	2		×	×	6 GB97.1-85 Zn.D
14	YC11136	卡子	CLAMP	1		×	×	
15	YC14395	闭车支座	BRACKET	1		×		
	S29461	闭车支座	BRACKET	1			×	
16	AYC10050	停车拉线	STOP LINE	1		×	×	
17	19M7376	螺栓	CAP SCREW	1		×	×	M8X22 GB5783-86 8.8 Zn.D
18	14G02089	螺母	NUT	1		×	×	M8 GB6172-86 5 Zn.D
19	12M7008	弹簧垫圈	LOCK WASHER	1		×	×	8 GB93-87 Zn.D
20	14M7307	锁紧螺母	LOCK NUT	1		×	×	M8 GB889-86 8 Zn.D
21	YC16137	球铰	BALL JOINT	1			×	
	YC16137	球铰	BALL JOINT	2		×		
22	12G45005	弹簧垫圈	LOCK WASHER	1		×	×	5 GB93-87 Zn.D
23	AYC10496	操纵杆	LEVER	1		×	×	
24	Z40822	套	HANDLE	1		×	×	
25	YC16136	球头	BALL STUD	1			×	
	YC16136	球头	BALL STUD	2		×		
26	YC16138	弹簧	SPRING	1			×	
	YC16138	弹簧	SPRING	2		×		
	YC16139	弹簧	SPRING	1			×	
	YC16139	弹簧	SPRING	2		×		
27	YC14880	接头	TIE-IN	1		×		

BATTERY
蓄电池

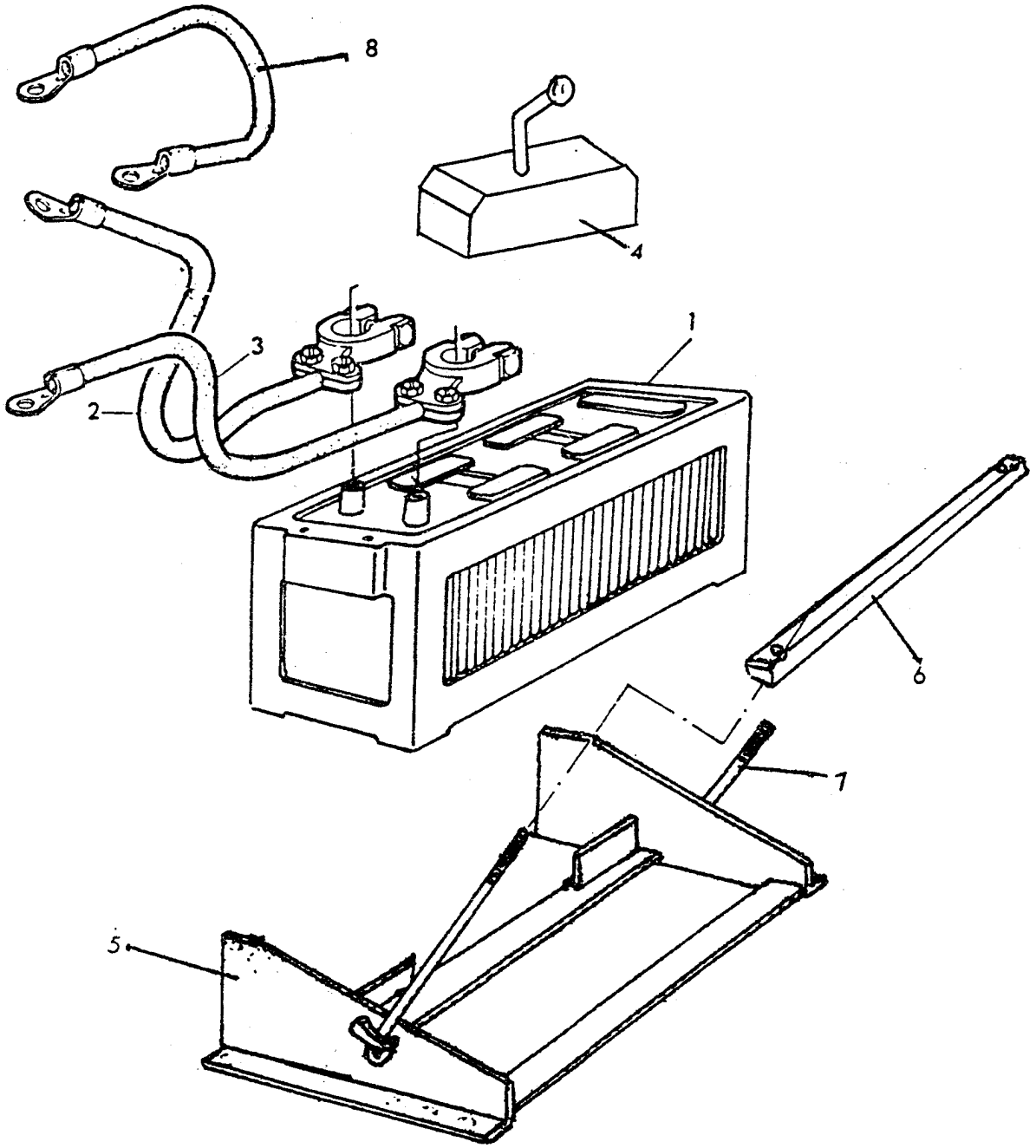

序号	件　号			数量		MODELS		备　注
						3 0 7 0 W L	3 0 7 0 W Y	
KEY	PART NO.	名　称	DESCRIPTION	QTY	SERIAL NO.			REMARKS
1	AS42774	蓄电池	BATTERY	1			×	
	AYC10698	蓄电池	BATTERY			×		
2	AYC12053	蓄电池导线	CABLE	2		×	×	
3	AS45797	蓄电池接地线	CABLE	3		×	×	
4	AYC10697	电源总开关	SWITCH	4		×	×	
5	AYC11779	蓄电池架	SUPPORT	5		×	×	
6	YC16214	压板	PLATE	6		×	×	
7	YC16215	拉杆	ROD	7		×	×	
8	AYC10503	发动机接地线	CABLE	8		×	×	

ELECTRICAL PARTS– DISCONNECT PLUG
发动机电器元件及电路联结

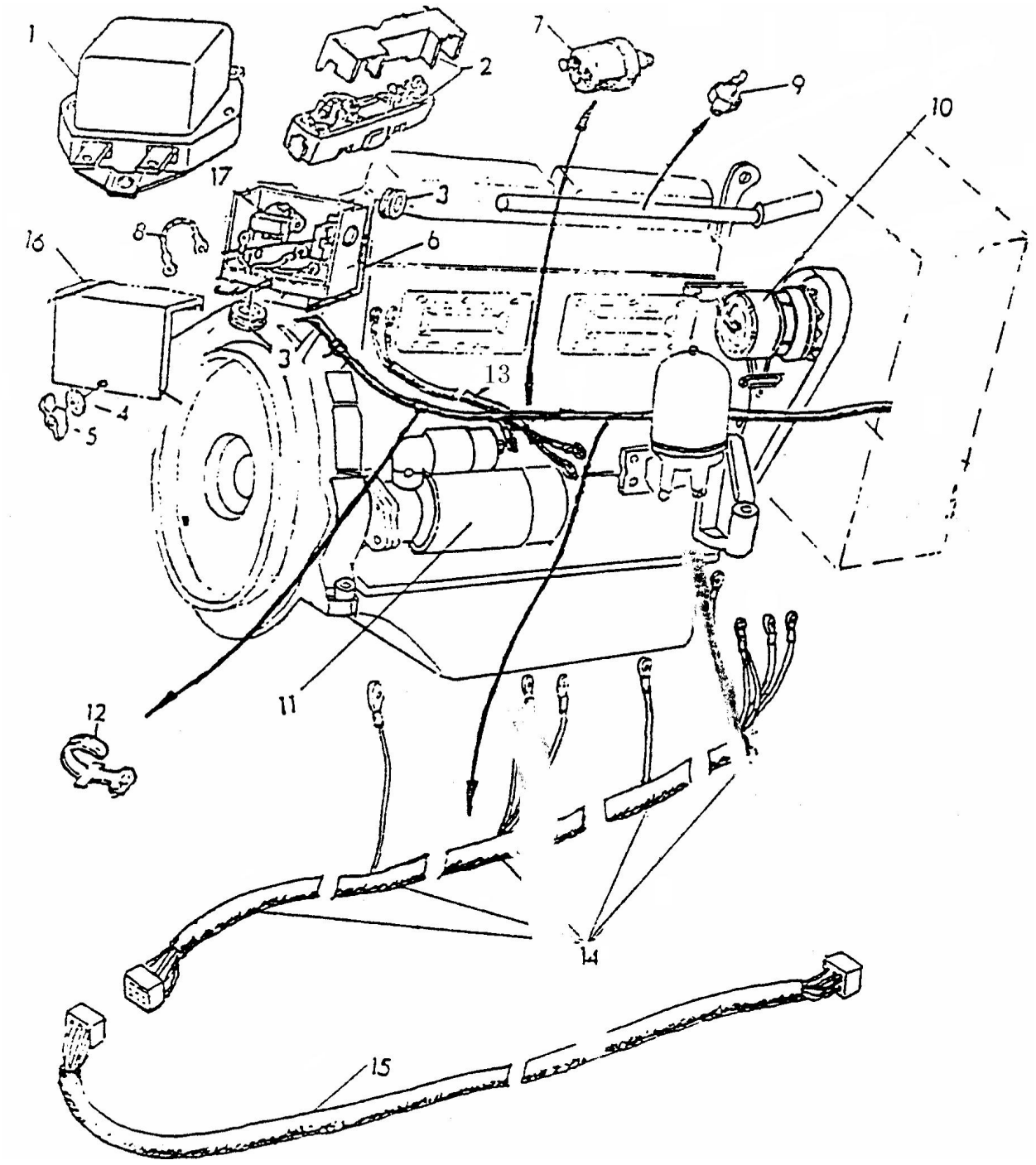

序号	件　号			数量		MODELS		备　　注
						3 0 7 0 W L	3 0 7 0 W Y	
KEY	PART NO.	名　　称	DESCRIPTION	QTY	SERIAL NO.			REMARKS
1	AS32232	继电器	RELAY	1		×	×	
2	AYC10858	保险	FUSE	1		×	×	
3	YC12871	护孔环	GROMMET	2		×	×	
4	24M7054	垫圈	WASHER	1		×	×	6 GB97.1-85
5	YC12351	蝶形螺母	WINGNUT	1		×	×	
6	YC11681	电气盒支架	HOLDER	1		×		
	D42440	电气盒支架	HOLDER	1			×	
7	AS26473	油压传感器	SENDER	1		×	×	
8	AYC10631	电源线	CABLE	1		×	×	
9	AS26474	水温传感器	SENDER	1		×	×	
10		发电机	ALTERNATOR	1		×	×	发动机自带
11		起机	STARTINGMOTOR	1		×	×	发动机自带
12	YC16954	扎线带	CLAMP	AR		×	×	
13	AYC10788	发动机电源线	CABLE	1		×	×	
14	AS26462	发动机线束	HARNESS	1			×	
	AYC10682	发动机线束	HARNESS	1		×		
15	AYC10677	主线束	HARNESS	1		×	×	
16	YC12869	电器盒盖	COVER	1		×	×	
17	AYC10862	电器盒	BOX	1		×	×	

DACHBOARD PANEL-SISCONNECT PLUG
仪表盘电器元件及电路联结

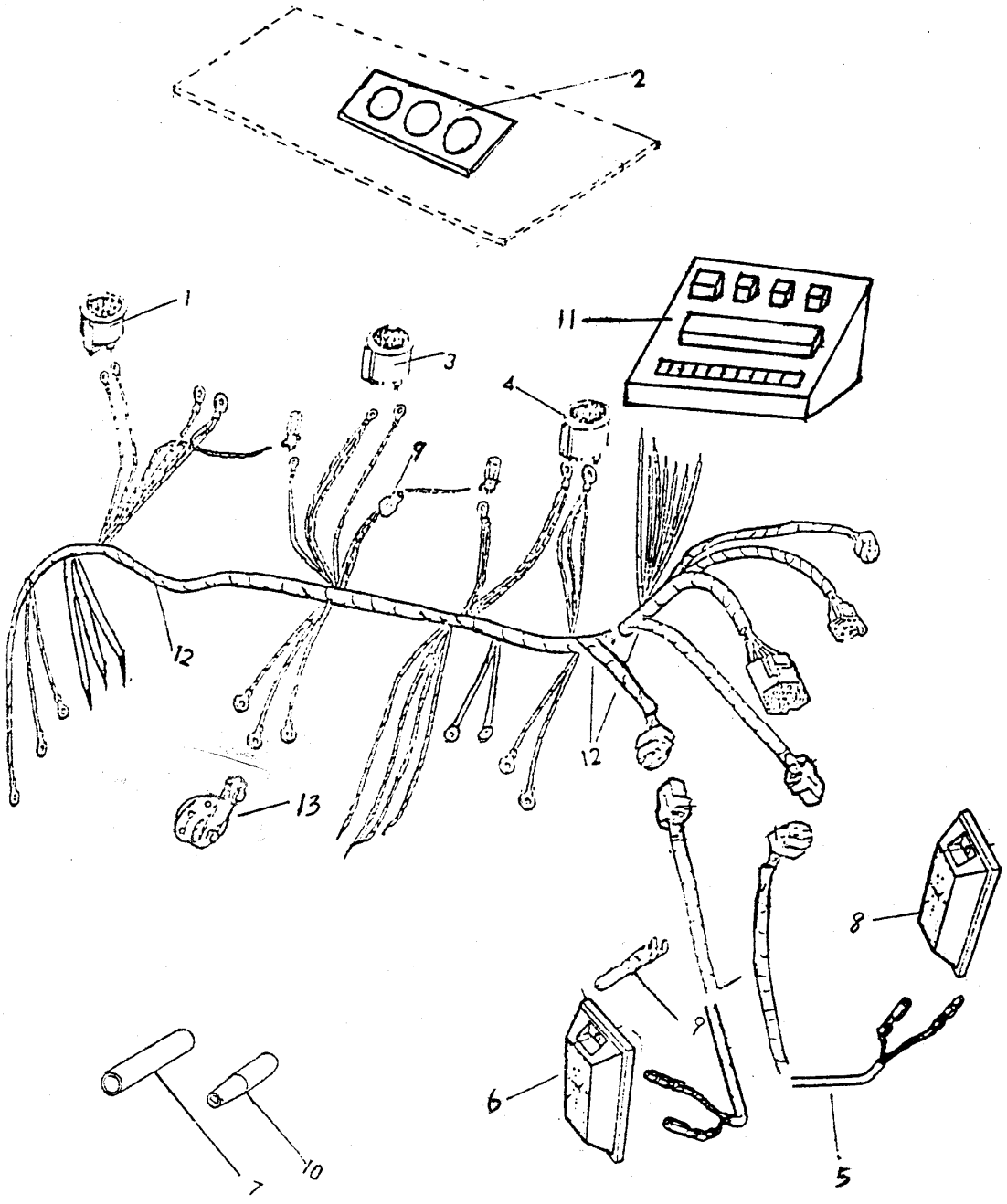

序号	件　号			数量		MODELS		备　　注
						3	3	
						0	0	
						7	7	
						0	0	
						W	W	
KEY	PART NO.	名　　称	DESCRIPTION	QTY	SERIAL NO.	L	Y	REMARKS
1	AS46893	油压表	GAUGE	1		×	×	包含在组合仪表里
2	AS26198	组合仪表	GAUGES	1		×	×	
3	AS46892	水温表	GAUGE	1		×	×	包含在组合仪表里
4	AS29688	电压表	GAUGE	1		×	×	包含在组合仪表里
5	AYC10677	主线束	HARNESS	1		×	×	
6	AYC10784	转向灯	LIGHT	2		×	×	
7	57M3099	单向插头护套	HOUING	AR		×	×	
8	AYC12232	尾灯	LIGHT	2		×	×	
9	57G30090	圆柱形插头	CONNECTOR	AR		×	×	
10	57G30990	单向插座护套	HOUING	AR		×	×	
11	AS26200	中央配电盒	BOX	1		×	×	
12	AYC10678	驾驶台线束	HARNESS	1		×	×	
13	AYC12583	喇叭	HORN	1		×	×	

POSI-TORQUE DRIVE
行走无级变速器

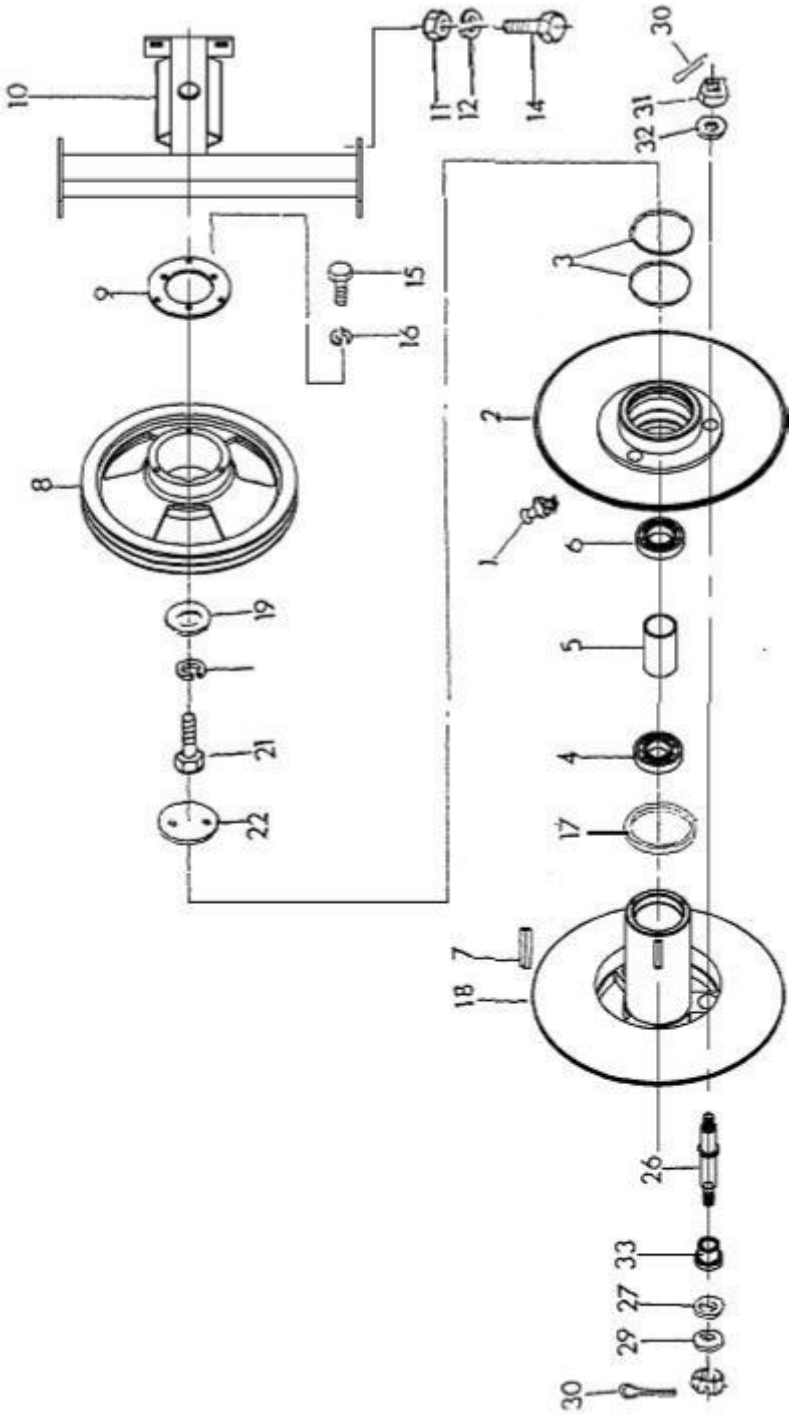

序号 KEY	件　号 PART NO.	名　　称	DESCRIPTION	数量 QTY	SERIAL NO.	MODELS 3 0 7 0	备　　注 REMARKS
1	58G20810	油嘴	LUBRICATIONFITTING	1		×	M6X1.00 GB1152-79
2	YC11779	皮带盘	SHEAVE	1		×	动盘
3	F10008	油封	SEAL	2		×	115X3.1
4	00G160208	轴承	BALL BEARING	1		×	GB279-88
5	YC11792	间隔套	SPACER	1		×	
6	00G160209	轴承	BALL BEARING	1		×	GB279-88
7	49G00756	键	KEY	1		×	12X700 GB96-79
8	D37124	皮带盘	SHEAVE	1		×	
9	YC11784	连接盘	PLALE	1		×	
10	AYC10438	支架	HODER	1		×	
11	14G00102	螺母	NUT	AR		×	M10 GB6170-86 8Zn.D
12	12G45010	垫圈	WASHER	AR		×	10 GB93-87 Zn.D
14	19G08530	螺栓	CAP SCREW	AR		×	M10X30 GB5783-86 8.8Zn.D
15	19G08420	螺栓	CAP SCREW	AR		×	M8X20 GB5783-86 8.8Zn.D
16	12G45008	垫圈	WASHER	AR		×	8 GB93-87 Zn.D
17	YC11472	垫圈	WASHER	1		×	
18	YC11780	皮带盘	SHEAVE	1		×	定盘
19	YC11783	垫圈	WASHER	1		×	
20	12G45012	垫圈	WASHER	1		×	12 GB93-87 Zn.D
21	19G08625	螺栓	CAP SCREW	1		×	M12X25 GB5783-86 8.8Zn.D
22	YC11787	端盖	PLATE	1		×	
26	YC11786	导柱	SHAFT	3		×	
27	YC11790	锥面垫圈	WASHER	3		×	16 GB8850Zn
29	YC11791	球面垫圈	WASHER	3		×	16 GB8849Zn
30	11G02036	开口销	COTTER PIN	6		×	4X36GB91-86 Zn.D
31	14G29169	螺母	NUT	6		×	M16X1.5 GB9459-88 05 Zn.D
32	24G20016	垫圈	WASHER	3		×	16 GB848-85 Zn.D
33	YC11789	导套	BUSHING	3		×	

TIGHTEN MECHANISM
行走皮带张紧机构

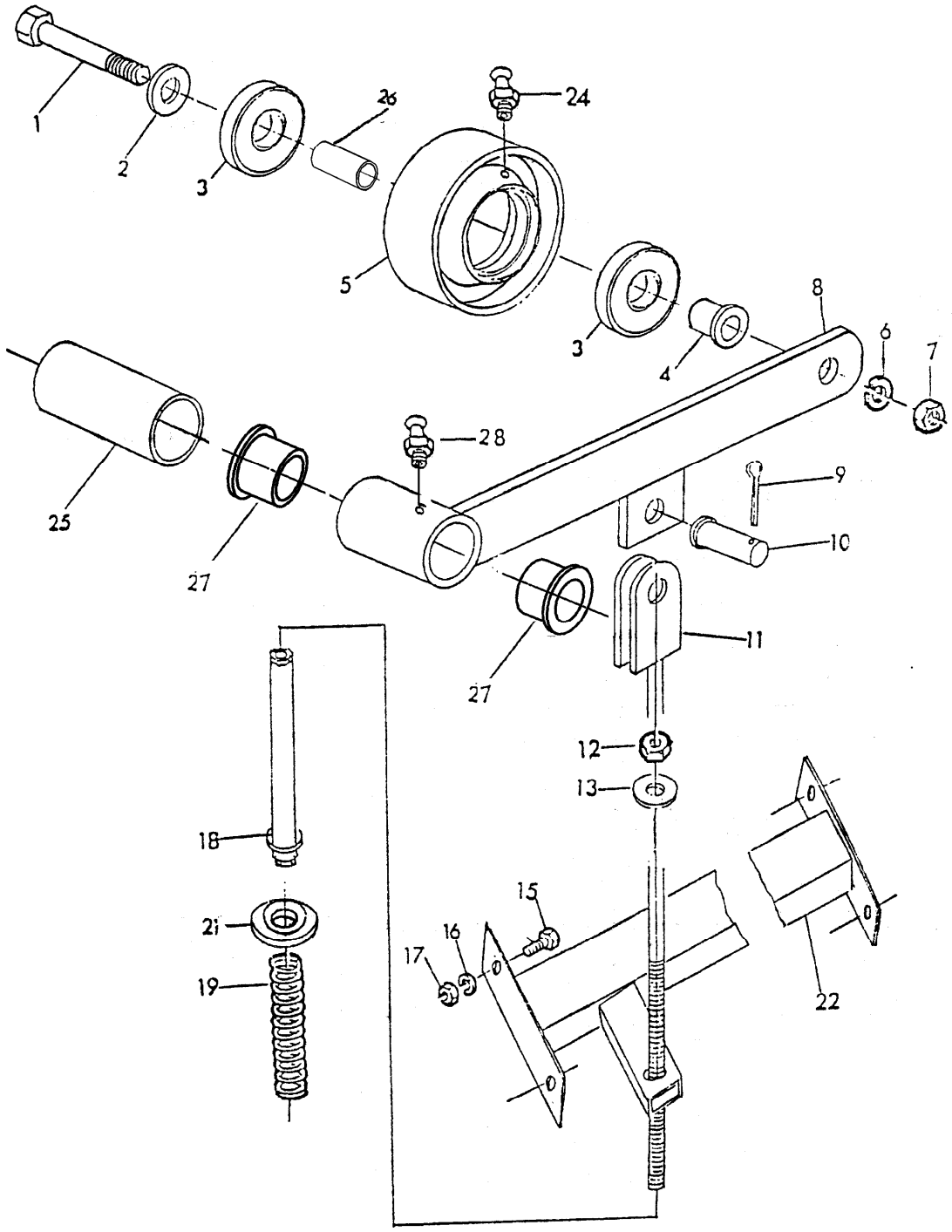

序号 KEY	件　号 PART NO.	名　　称	DESCRIPTION	数量 QTY	SERIAL NO.	MODELS 307 0	备　　注 REMARKS
1	19G08856	螺栓	CAP SCREW	1		×	M16X100 GB5782-86 8.8Zn
2	D37406	垫圈	WASHER	1		×	
3	00G160206	轴承	BEARING	2		×	GB278
4	YC11539	轴套	BUSHING	1		×	
5	YC11448	张紧轮	IDLER	1		×	
6	12G45016	垫圈	WASHER	1		×	16 GB 93-87Zn.D
7	14G00162	螺母	CAP SCREW	1		×	M16 GB6170-86 8 Zn.D
8	AYC10439	支臂	LEVER	1		×	
9	11G01716	开口销	COTTER PIN	1		×	3X30 GB 91-86 Zn.D
10	45G01030	销轴	PIN	1		×	10X30 GB882Zn.D
11	AYC10441	拉杆	ROD	1		×	
12	14G00122	螺母	NUT	1		×	M12 GB6170-86 Zn.D
13	YC11458	垫圈	WASHER	1		×	
15	19G08530	螺栓	CAP SCREW	AR		×	M10X30 GB5783-86 8.8 Zn.D
16	12G45010	垫圈	LOCK WASHER	AR		×	10 GB93-87 Zn
17	14G00102	螺母	NUT	AR		×	M10 GB6170-86 8Zn.D
18	AYC10443	导管	SLEEVE	1		×	
19	YC11536	弹簧	SPRING	1		×	
21	YC11543	球面垫圈	WASHER	1		×	
22	AYC10440	支架	LECER	1		×	
24	58G30618	油嘴	LUBRICATION FITTING	1		×	M6X1GB1153-79
25	YC11574	间管	SPACER	1		×	
26	YC12478	间管	SPACER	1		×	
27	YC11433	间管	SPACER	2		×	
28	58G30610	油嘴	LUBRICATION FITTING	1		×	M6X1GB1152-79

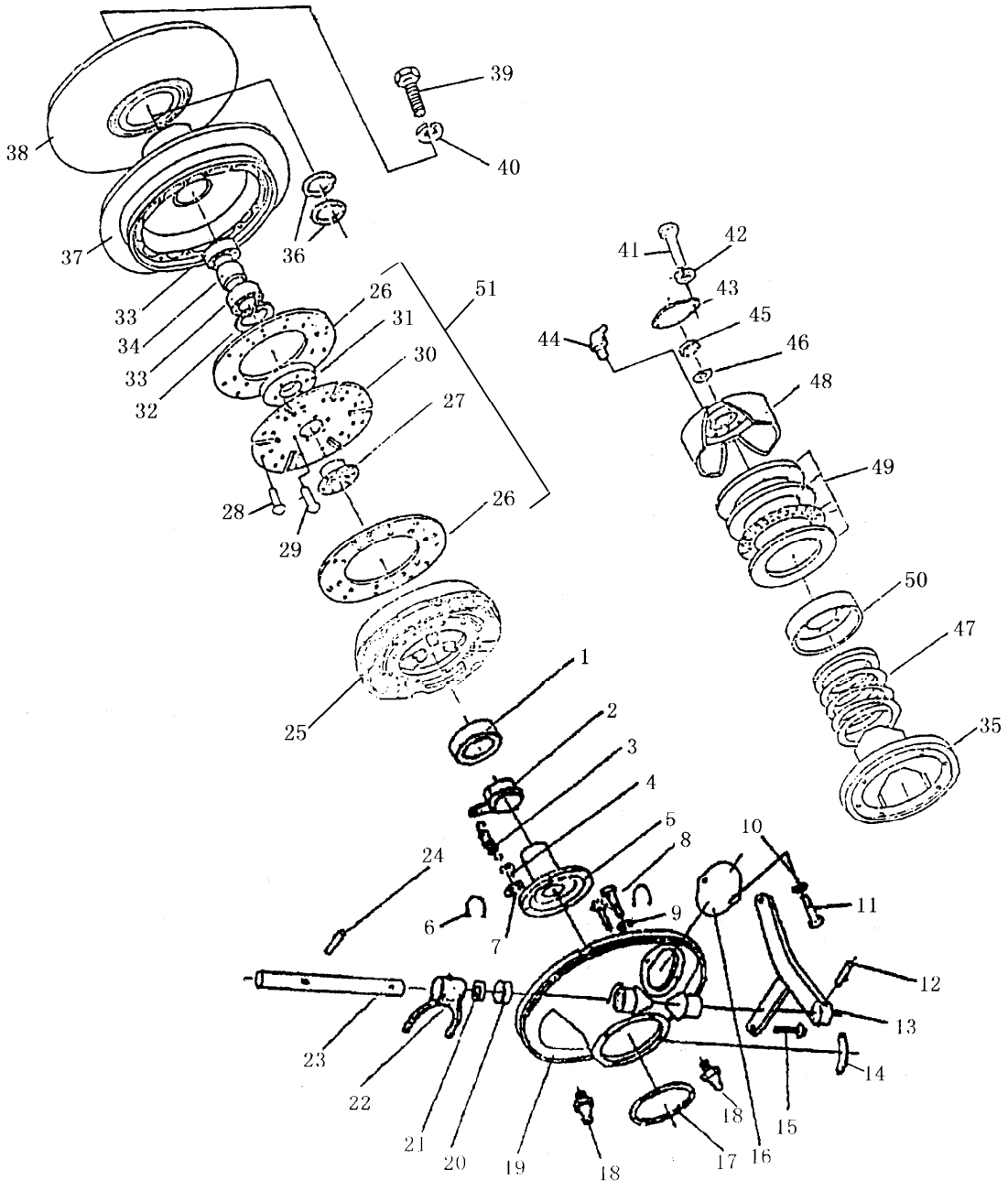
39
40
38
37
36
33
34
33
32
26
31
30
27
28
29
26
51
25
1
2
3
4
5
8
24
6
7
9
10
11
12
13
14
23
22
21
20
19
18
18
17
16
15
41
42
43
45
44
46
48
49
50
47
35

序号 KEY	件　号 PART NO.	名　　称	DESCRIPTION	数量 QTY	SERIAL NO.	MODELS 3 0 7 0	备　　注 REMARKS
1	00G986711	轴承	BEARING	1		×	55x90x23
2	YC11618	离合器分离套	HUB	1		×	
3	YC11904	弹簧	SPRING	1		×	
4	19G35230	螺栓	SCREW	1		×	M8x30 GB32.1-88 8.8 Zn.D
5	YC11617	轴承套	HUB	1		×	
6	S24338	铁丝	IRON	1.5M		×	1.5
7	12M7008	垫圈	WASHER	4		×	8 GB93-87 Zn.D
8	19G35130	螺栓	SCREW	4		×	M10x30 GB32.1-88 Zn.D
9	12M7013	垫圈	WASHER	4		×	10 GB93-87 Zn.D
10	12M5737	垫圈	WASHER	4		×	6 GB93-87 Zn.D
11	21M1236	螺钉	SCREW	4		×	M6x10 GB67-85 4.8 Zn.D
12	25G10840	销	PIN	1		×	A8x40 GB118-86
13	AYC10483	离合器拉杆焊合	LEVER	1		×	
14	YC11837	端盖	COVER	1		×	
15	YC11774	销轴	SHAFT	1		×	
16	F40404	检视门盖	COVER	1		×	
17	YC11797	衬垫	SHIM	1.2		×	
18	58M5573	油杯	LUBRICATION FITTIN	2		×	M6x1.00 GB1152-79
19	D40104	离合器外壳	HOUSING	1		×	
20	YC11840	密封架	SEAL	1		×	
21	YC11803	毡圈	GASKET	1		×	
22	YC11824	分离拨叉	SHIFTER	1		×	
23	YC11635	轴	SHAFT	1		×	
24	25M1036	销	PIN	1		×	A8x45 GB117-86
25	AD40-05	离合器压盘总成	CLUTCH PLATEN	1		×	
26	YC11805	磨擦片	CLUTCH DISK	2		×	
27	YC11912	固定盘轮壳	HUB	1		×	
28	16G70409	铆钉	RIVET	24		×	4x9 GB875-86
29	16M2546	铆钉	RIVET	6		×	8x18 GB867-86
30	YC11846	磨擦片固定盘	PLATE	1		×	
31	YC11847	挡油盘	PLATE	1		×	
32	40M7044	挡圈	SNAP RING	1		×	72 GB893.1-86 Zn.D
33	00G160207	轴承	BEARING	2		×	160207 GB279-88
34	F40804	支承衬套	BUSHING	1		×	
35	YC11833	动盘凸轮	DRIVER	1		×	
36	S24335	橡胶圈	PUCKING	2		×	110x31 14HG4-333-66

CLUTCH
离合器

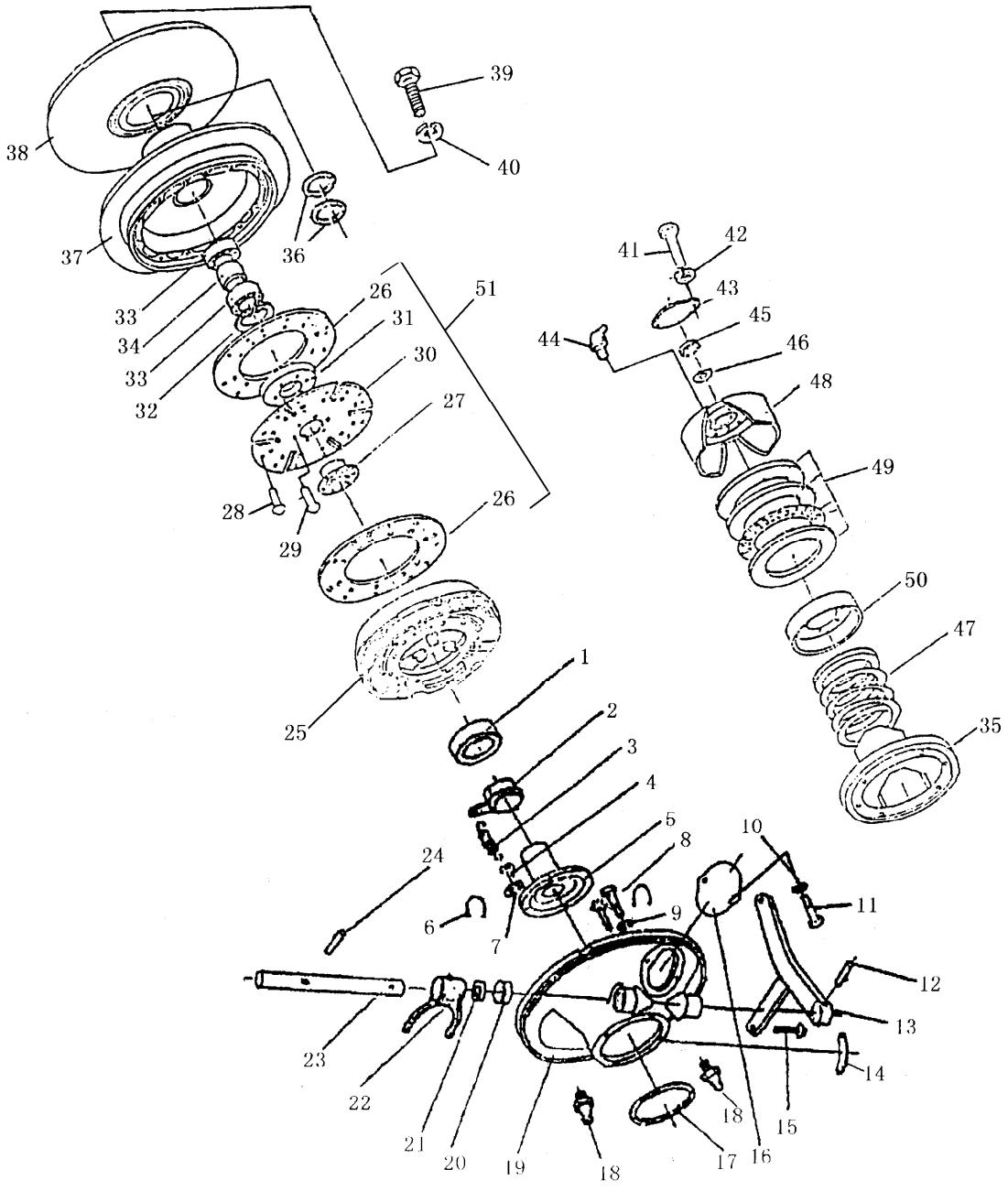
39
40
38
37
36
33
34
33
32
26
31
30
27
28
29
26
51
25
1
2
3
4
5
8
24
6
7
9
10
11
12
13
14
23
22
21
20
19
18
18
17
16
15
41
42
43
45
44
46
48
49
50
47
35

序号 KEY	件　号 PART NO.	名　　称	DESCRIPTION	数量 QTY	SERIAL NO.	MODELS 3 0 7 0	备　　注 REMARKS
37	F40215A	行走离合器轮毂	HUB	1		×	
38	F40206A	动盘	HALFSHEAVE	1		×	
39	19M7744	螺栓	CAP SCREW	6		×	M12x35 GB5783-86 8.8 Zn.D
40	12M7014	垫圈	LOCK WASHER	6		×	12 GB93-87 Zn D
41	19M7273	螺栓	CAP SCREW	6		×	M12x60 GB5782-86 8.8 Zn.D
42	12M7014	垫圈	LOCK WASHER	6		×	12 GB93-87 Zn.D
43	F40412A	防尘盖	BOOT	1		×	
44	58G31018	油杯	LUBRICATION FITTIN	2		×	90° M10x1.00 GB1153-79
45	YC11897	园螺母	NUT	1		×	
46	YC11839	锁紧垫圈	LOCK WASHER	1		×	
47	YC11880	弹簧	SPRING	1		×	
48	YC11822	定盘凸轮	RIVR	1		×	
49	AYC10530	轴承压合	BEARING	1		×	
50	YC11845	防尘罩	BOOT	1		×	
51	AYC10517	离合器片铆合	CLUTCH DISK	1		×	含 26、27、28、29、30、31

FRONT AXLE
前桥

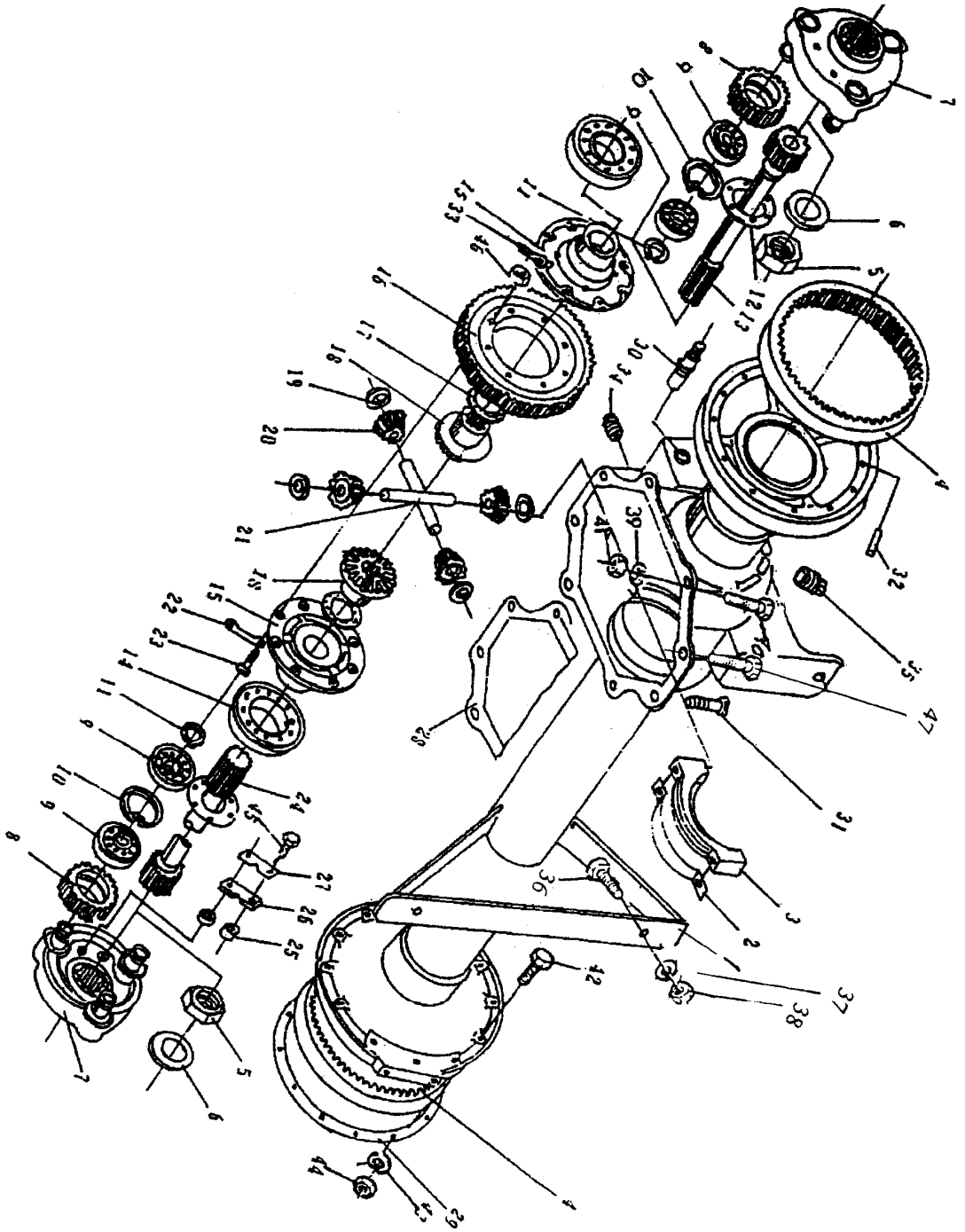

序号 KEY	件　号 PART NO.	名　　称	DESCRIPTION	数量 QTY	SERIAL NO.	MODELS 3 0 7 0	备　　注 REMARKS
1	AYC10479	主动轮桥壳	COVER	1		×	
2	YC11835	止动垫片	LOCK WASHER	2		×	
3	YC11823	座	QUILL	2		×	
4	YC11931	内齿轮	GEAR	2		×	
5	YC11928	螺母	NUT	2		×	
6	YC11859	垫圈	WASHER	2		×	
7	AYC10522	导架铆合	GUIDE	2		×	
8	YC11927	行星齿轮	GEAR	6		×	
9	00G207	轴承	BEARING	12		×	207 GB276-89
10	40M7044	挡圈	SAP RING	6		×	72 GB893.1-86 Zn.D
11	40M7046	挡圈	SAP RING	6		×	35 GB894.1-86 Zn.D
12	YC11834	垫圈	SHIM	2		×	
13	YC11907	带齿轮短半轴	SHAFT	1		×	
14	00G7514E	轴承	BEARING	2		×	7514E GB297-84
15	YC11828	差速器齿轮箱盖	COVER	2		×	
16	YC11920	从动齿轮	GEAR	1		×	
17	YC11856	半轴齿轮垫圈	WASHER	2		×	
18	YC11923	半轴齿轮	GEAR	2		×	
19	YC11857	行星齿轮垫圈	WASHER	4		×	
20	YC11924	行星齿轮	GEAR	4		×	
21	YC11922	十字轴	SHAFT	2		×	
22	YC11867	锁片	LOCK WASHER	4		×	
23	YC11921	螺栓	CAP SCREW	8		×	
24	YC11633	带齿轮长半轴	SHAFT	1		×	
25	YC11942	衬套	BUSHING	4		×	
26	YC11873	止动板	LOCK WASHER	2		×	
27	YC11864	锁板	LOCK WASHER	2		×	
28	YC11794	衬垫	GASRET	1		×	
29	YC11793	衬垫	GASRET	2		×	
30	YC11932	轴销	SHAFT	1		×	
31	YC11877	螺栓	CAP SCREW	2		×	
32	44G30835	销	PIN	3		×	D8X35 GB119-86
33	11G01630	销	PIN	8		×	2.5x30 GB91-86 Zn.D
34	YC11820	螺塞	PIPE PLUG	5		×	3/4"
35	YC11821	螺塞	PIPE PLUG	1		×	1 1/4"
36	19G07046	螺栓	CAP SCREW	5		×	M18X50 GB5782-86 8.8Zn.D

FRONT AXLE
前桥

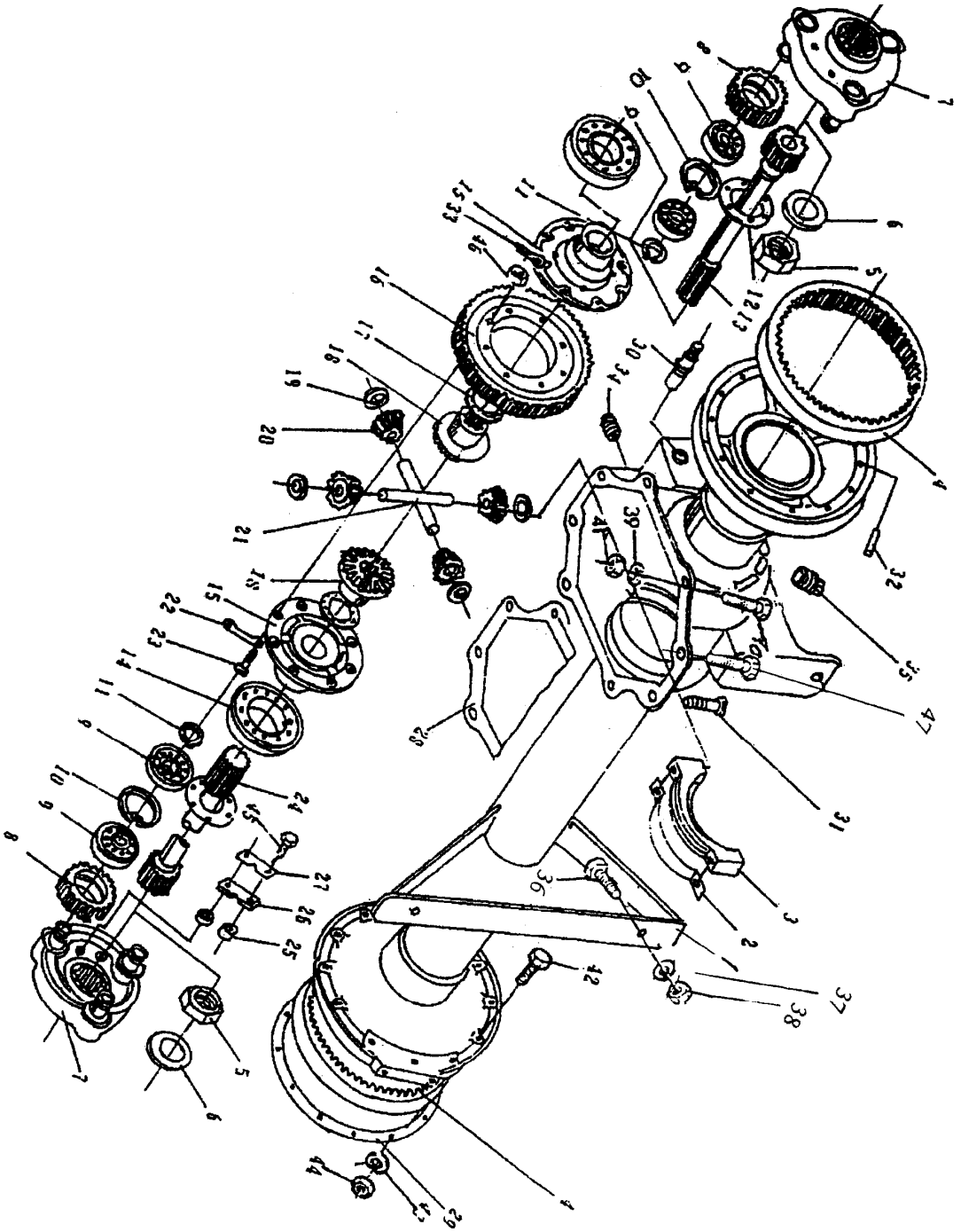

序号	件　号			数量		MODELS 3 0 7	备　　注
KEY	PART NO.	名　　称	DESCRIPTION	QTY	SERIAL NO.	0	REMARKS
37	12G45018	垫圈	LOCK WASHER	5		×	18 GB93-87 Zn.D
38	14G14180	螺母	NUT	5		×	M18 GB41-86 5 Zn.D
39	12M7068	垫圈	LOCK WASHER	8		×	14 GB93-87 Zn.D
40	YC11638	去边螺栓	LOCK WASHER	4		×	
41	14M7504	螺母	NUT	8		×	M14 GB6170-86 8 Zn.D
42	19M7414	螺栓	CAP SCREW	24		×	M12x90 GB5782-86 8.8Zn.D
43	12M7014	垫圈	LOCK WASHER	24		×	12 GB93-87 Zn D
44	14M7031	螺母	NUT	24		×	M12 GB6170-86 8 Zn.D
45	19G08525	螺栓	CAP SCREW	2		×	M10x25 GB5783-86 8.8 Zn.D
46	14G30142	螺母	NUT	8		×	M14x1.5 GB9457-88 8 Zn.D
47	19M7483	螺栓	CAP SCREW	2		×	M14x60 GB5782-86 8.8 Zn.D

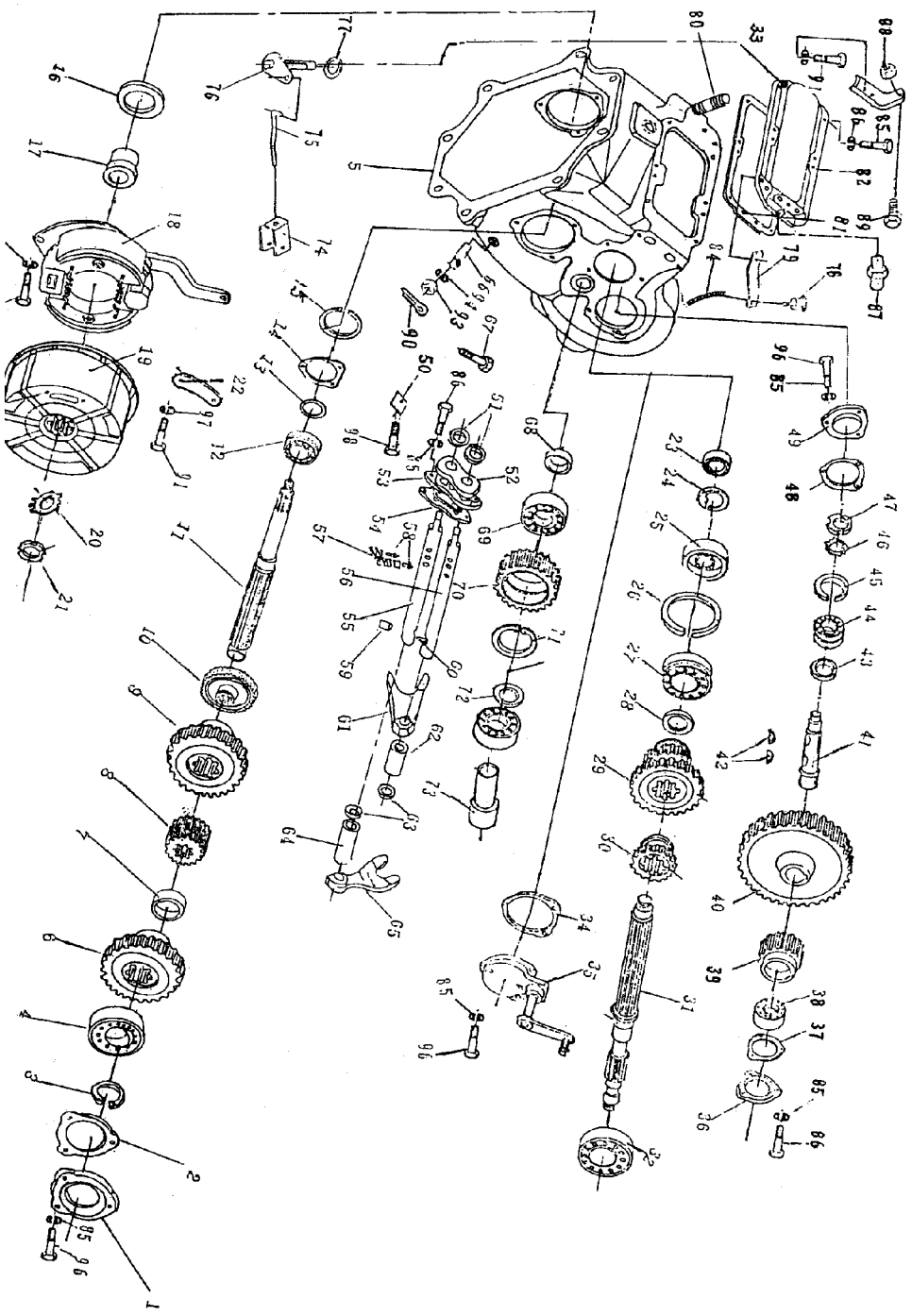

序号 KEY	件　号 PART NO.	名　　称	DESCRIPTION	数量 QTY	SERIAL NO.	MODELS 3 0 7 0	备　　注 REMARKS
1	YC11815	端盖	COVER	1		×	
2	YC11799	衬垫	GASKET	1		×	
3	40G02040	挡圈	SNAPRING	1		×	40 GB894.1-86Zn.D
4	00G308	轴承	BEARING	1		×	GB276-89
5	D40102	变速箱壳体	TRANSMISSION CASE	1		×	
6	YC11644	Ⅰ倒速齿轮	GEAR	1		×	
7	YC11936	支撑衬套	BUSHING	1		×	
8	YC11886	主传动小齿轮	PINON	1		×	
9	YC11885	Ⅱ速齿轮	GEAR	1		×	
10	YC11641	Ⅲ速齿轮	GEAR	1		×	
11	YC11890	齿轮箱第二轴	COVUNTERSHAFT	1		×	
12	00G50308	轴承	BEARING	1		×	GB277-89
13	YC11804	密封环	SEAL	1		×	
14	YC11800	衬垫	SHIM	1		×	
15	D40442	止动环	SNAPRING	1		×	90/96.5GB305-89
16	48G14669	油封	SEAL	1		×	PG50X80X12 JB2600-80
17	YC11816	支撑套筒	HUB	1		×	
18	AYC10475	制动器总成	BRAE	1		×	
19	YC11812	制动轮毂	CASE	1		×	
20	D40444	止退垫圈	LOCK WASHER	1		×	30 GB858-88Zn.D
21	52M4526	圆螺母	NUT	1		×	M30X1.5 GB810-88
22	YC11842	检视门盖	COVER	1		×	
23	YC11897	圆螺母	NUT	1		×	
24	YC11839	锁紧垫圈	LOCK WASHER	1		×	
25	YC11895	刹车轮	BRAE	1		×	
26	D40411	止动环	SNAP RING	1		×	80/86.6 GB305-89
27	00G50208	轴承	BEARING	1		×	GB277-89
28	YC11937	支撑衬套	BUSHING	1		×	
29	YC11640	ⅡⅢ速滑动齿轮	GEAR	1		×	
30	YC11645	Ⅰ倒速滑动齿轮	GEAR	1		×	
31	F40619	齿轮箱主传动轴	SHAFT	1		×	
32	00G209	轴承	BEARING	1		×	GB276-89
33	YC11820	螺塞	PLUG	1		×	3/4″ ²
34	YC11798	衬垫	SHIM	1		×	
35	AYC10472	刹车盖装配	BRAKE COVER	1		×	
36	YC11836	轴承端盖	COVER	1		×	

TRANSMISSION GEARS
变速箱齿轮

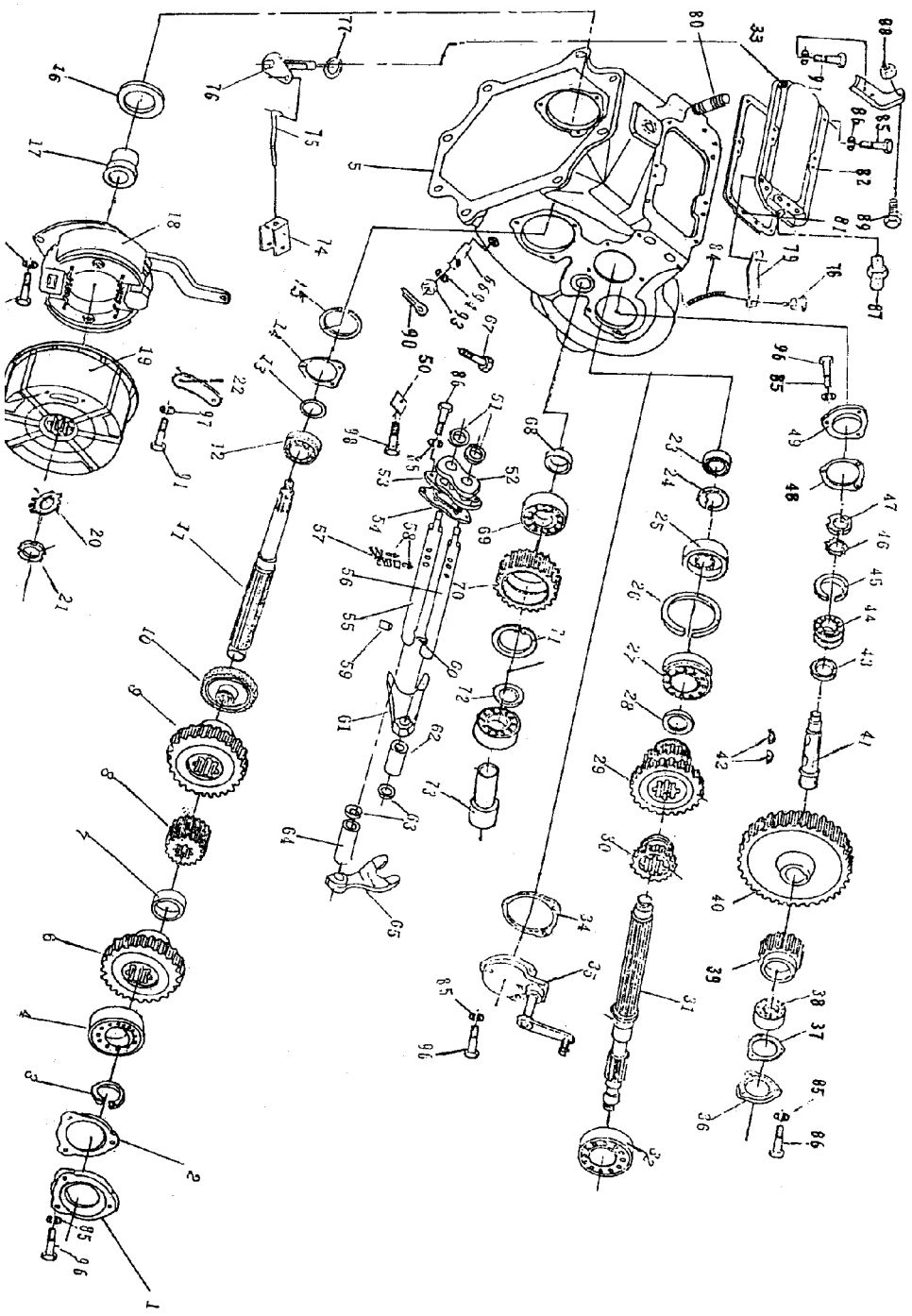

序号 KEY	件　号 PART NO.	名　　称	DESCRIPTION	数量 QTY	SERIAL NO.	MODELS 307 0	备　　注 REMARKS
37	YC11795	衬垫	GASKET	1		×	
38	00G206	轴承	GEARING	1		×	206 GB276-89
39	YC11643	Ⅰ速小齿轮	GEARING	1		×	
40	YC11642	Ⅰ速大齿轮	GEAR	1		×	
41	YC11888	轴	SHAFT	1		×	
42	26G10838	平圆头键	SHAFT KEY	2		×	8X38 GB1099-72
43	YC11938	支撑衬套	BUSHING	1		×	
44	00G50206	轴承	BEARING	1		×	50206 GB277-89
45	D40440	止动环	SNAP RING	1		×	62/67.7 GB305-89
46	D40443	止动垫圈	WASHER	1		×	25 GB858-67Zn
47	52G12521	圆螺母	NUT	1		×	M25X1.5 GB812-67
48	YC11796	衬垫	GASKET	1		×	
49	YC11814	端盖	COVER	1		×	
50	YC11841	锁片	LOCK WASHER	1		×	
51	F40012	毡圈	RING	2		×	
52	F40107	护套	BUSHING	1		×	
53	YC11838	板	SHEET	1		×	
54	YC11802	衬垫	GASKET	1		×	
55	YC11892	Ⅱ、Ⅲ速变速杆	SHIFTER ROD	1		×	
56	YC11891	Ⅰ、倒速变速杆	SHIFTER ROD	1		×	
57	YC11903	弹簧	SPRING	2		×	
58	YC11896	连锁销	SPRINGPIN	2		×	
59	YC11900	螺塞	PLUG	1		×	
60	YC11933	锁定销	SPRING PIN	1		×	
61	YC11894	Ⅱ、Ⅲ速拨叉	SHIFTER	1		×	
62	YC11939	衬套	BUSHING	1		×	
63	YC11866	调整垫	SHIM	AR		×	
64	YC11940	衬套	BUSHING	1		×	
65	YC11893	Ⅰ、倒速拨叉	SHIFTER	1		×	
66	YC11898	螺栓	STUD	1		×	
67	YC11899	拉杆螺栓	CAP SCREW	2		×	
68	YC11941	支撑衬套	BUSHING	1		×	
69	00G207	轴承	BEARING	2		×	207 GB276-89
70	YC11646	中间齿轮	GEAR	1		×	
71	F40444	挡圈	SNAPRING	1		×	
72	YC11944	垫圈	SNAPRING	1		×	

TRANSMISSION GEARS
变速箱齿轮

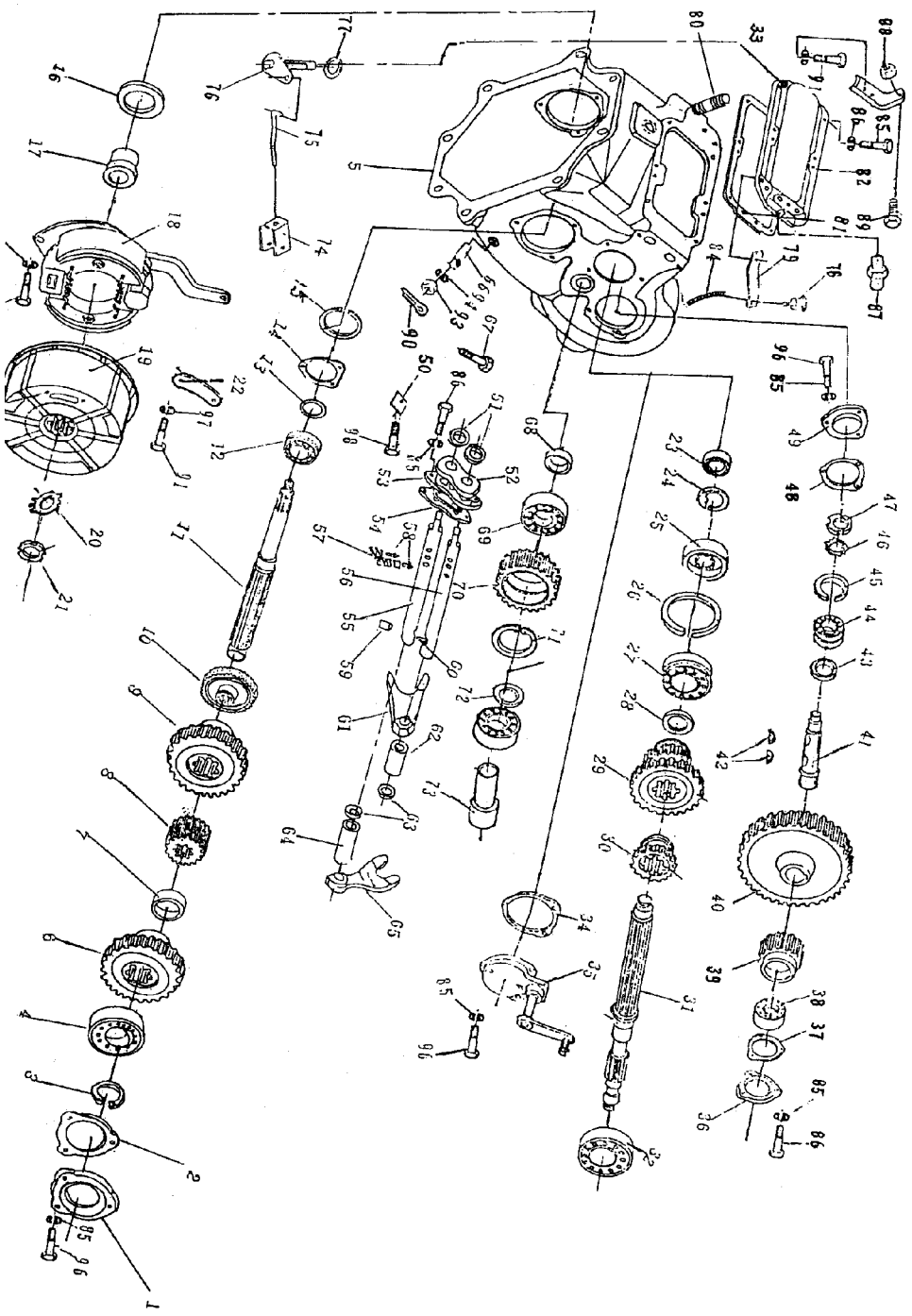

序号 KEY	件　号 PART NO.	名　　称	DESCRIPTION	数量 QTY	SERIAL NO.	MODELS 3 0 7 0	备　　注 REMARKS
73	YC11889	轴	SHAFT	1		×	
74	YC11872	连接叉	LEVER	1		×	
75	YC11637	拉杆	ROD	1		×	
76	AYC10484	轴焊合	ROCKER ARM	1		×	
77	24G00020	垫圈	WASHER	1		×	20 GB95-85Zn.D
78	58G41010	油杯	LUBRICATION FITTING	1		×	M6X1 GB1154-79
79	F40405	卡子	BRACE	1		×	
80	F40629	螺柱	STUD	1		×	
81	YC11801	衬垫	GASKET	1		×	
82	YC11813	箱盖	GASKET	1		×	
83	YC11871	支撑板	BRACE	1		×	
84	F10064	软管总成	HOSE	1		×	L=115
85	12M7008	垫圈	WASHER	8		×	8 GB93-87Zn.D
86	19M7139	螺栓	CAP SCREW	8		×	M8X20 GB5783-86 8.8Zn.D
87	58G21010	油杯	LUBRICATION FITTING	1		×	M10X1 GB1152-76
88	14M7140	螺母	NUT	1		×	M10 GB6170-86.8Zn.D
89	22G17530	螺钉	SCREW	1		×	M10X30 GB85-88 33HZn.D
90	11M7024	开口销	COTTON PIN	2		×	4X36 GB91-86Zn.D
91	21M1236	螺钉	SCREW	2		×	M6X10 GB67-85 Zn.D
92	19M7297	螺栓	CAP SCREW	1		×	M8X12 GB5783-86 8.8Zn.D
93	14M7186	螺母	NUT	1		×	M18 GB6178-86 Zn.D
94	24G35016	垫圈	WASHER	1		×	18 GB95-85Zn.D
95	44G10818	销	PIN	2		×	8X18 GB119-86
96	19G08430	螺栓	CAP SCREW	12		×	M8X30 GB5783-86 8.8Zn.D
97	12M5737	垫圈	WASHER	2		×	6 GB93-87Zn.D
98	14G14100	螺母	CAP SCREW	1		×	M10 GB41-86.5Zn.D

BRAKE
制动器

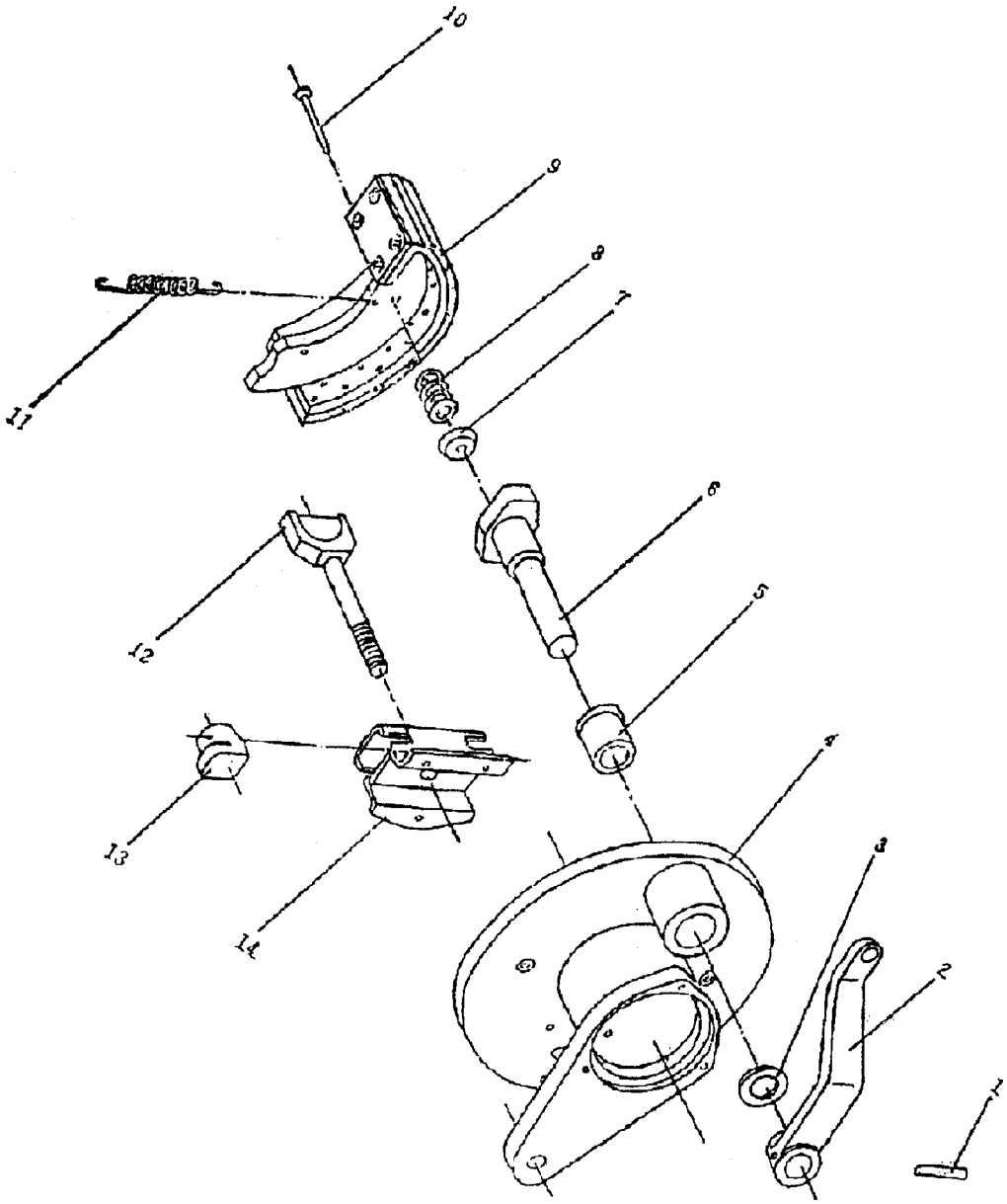

序号	件　号			数量		MODELS	备　　注
						3	
						0	
						7	
KEY	PART NO.	名　　称	DESCRIPTION	QTY	SERIAL NO.	0	REMARKS
1	25M1036	圆锥销	PIN	1		×	A8X45 GB117-86
2	YC11913	杠杆	LEVER	1		×	
3	YC11849	垫圈	WASHER	1		×	
4	YC11616	制动盘	CASE	1		×	
5	YC11806	轴套	HUB	1		×	
6	YC11632	制动凸轮	HUB	1		×	
7	YC11848	弹簧座	HOLDER	4		×	
8	YC11916	支撑弹簧	SPRING	2		×	
9	AYC10518	制动蹄铆合	BRAKEDISK	2		×	
10	YC18768	支撑销轴	PIN	2		×	
11	YC11915	松离弹簧	SPRING	2		×	
12	YC11914	调整螺杆	ADJUSTER	1		×	
13	YC11807	调整铰链	ADJUSTER	2		×	
14	AYC10516	托架焊合	BRACKET	1		×	

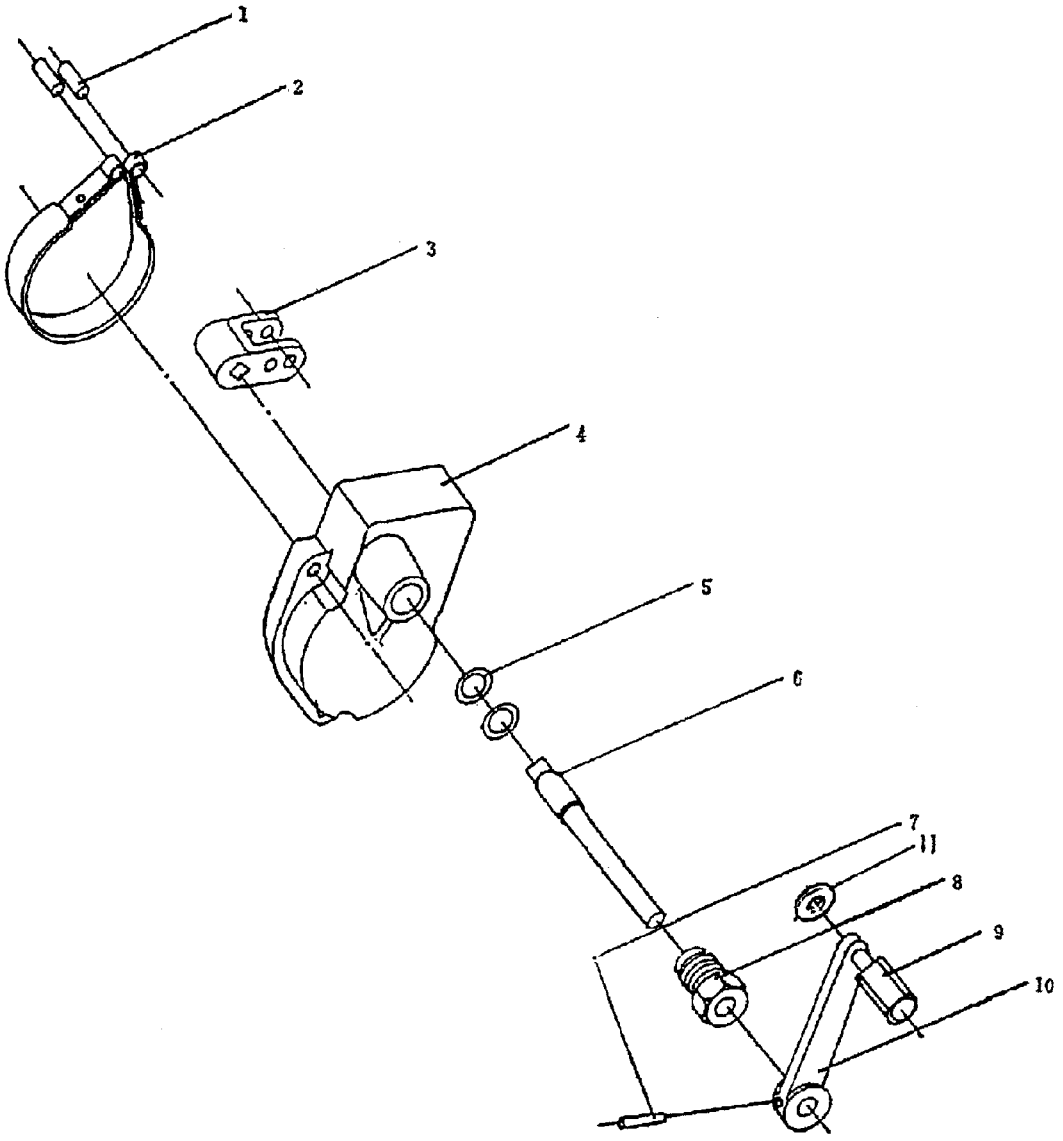
1
2
3
4
5
6
7
11
8
9
10

序号	件　号			数量		MODELS 3 0 7	备　　注
KEY	PART NO.	名　　称	DESCRIPTION	QTY	SERIAL NO.	0	REMARKS
1	44G30614	圆柱销	PIN	2		×	D6X14 GB119-86
2	AYC10529	刹车带铆合	BRAKE STRIP	1		×	
3	YC11827	刹车杆	ROD	1		×	
4	YC11614	刹车端盖	COVER	1		×	
5	YC11810	密封环	PACKING	2		×	
6	YC11631	刹车小轴	SHAFT	1		×	
7	25M1012	圆锥销	PIN	1		×	A4X28 GB117-86
8	YC11919	支撑套	HUB	1		×	
9	YC11918	轴	SHAFT LEVER	1		×	
10	YC11917	杠杆	LEVER	1		×	
11	24G00006	垫圈	WASHER	1		×	6 GB97-85 Zn.D

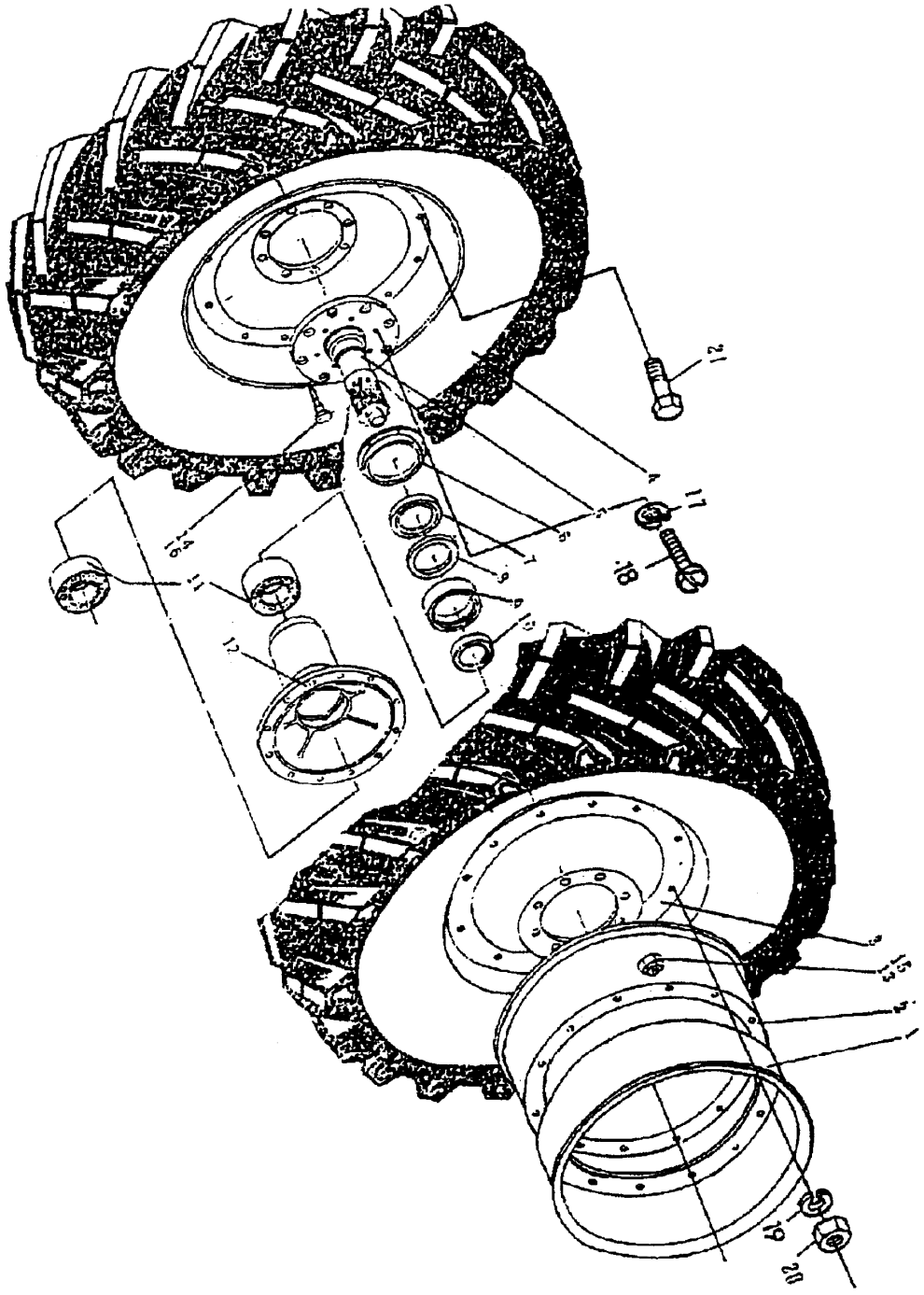
12
17
18
11
13
19
20

序号 KEY	件　号 PART NO.	名　称	DESCRIPTION	数量 QTY	SERIAL NO.	MODELS 3 0 7 0	备　注 REMARKS
1	AYC10520	轮缘焊合	RIM	2		×	15-24　(普通花纹)
	AYC10485	轮辋焊合	RIM	2		×	19.5L-24（高花纹）
2	YC11865	轮缘	RIM	2		×	
3	AYC10519	辐板焊合	RASP BAR	2		×	
4	F10009	轮胎	TYRE	2		×	15-24(普通花纹轮胎总成)
	F10099	外胎	COVER	2		×	15-24(普通花纹)
	F10098	内胎	INNER TUBE	2		×	15-24(普通花纹)
	F10097	垫皮	FLAP	2		×	15-24(普通花纹)
	AYC10486	轮胎	TYRE	2		×	19.5L-24（高花纹轮胎总成）
	D40003	外胎	COVER	2		×	19.5L-24（高花纹）
	D40002	内胎	INNER TUBE	2		×	19.5L-24（高花纹）
	D40004	垫皮	FLAP	2		×	19.5L-24（高花纹）
5	YC11929	半轴	SHAFT	2		×	
6	YC11860	防尘圈	SCRAPER RING	2		×	
7	YC11858	挡圈	SNAP RING	2		×	
8	YC11851	毡圈	GASKET	2		×	
9	YC11818	挡圈	SNAP RING	2		×	
10	F10006	油封	SEAL	2		×	85X110X12
11	00G7514E	轴承	BEARING	4		×	7514E GB297-84
12	YC11829	外壳体	HOUSING	2		×	
13	YC11879	前轮右螺母	NUT (RIGHT)	8		×	
14	YC11926	螺栓（右）	CAP SCREW (RIGHT)	8		×	
15	YC11878	前轮左螺母	NUT (LEFT)	8		×	
16	YC11923	螺栓（左）	CAP SCREW (LEFT)	8		×	
17	12M5737	垫圈	LOCK WASHER	6		×	6 GB93-87Zn.D
18	21M1236	螺钉	SCREW	6		×	M6X10 GB67-85 4.8Zn.D
19	12M7069	垫圈	LOCK WASHER	24		×	16 GB93-87Zn.D
20	14M7142	螺母	NUT	24		×	M16 GB6170-86 8Zn.D
21	19M7396	螺栓	CAP SCREW	24		×	M16X45 GB5783-86 8.8Zn.D

REAR AXLE
后桥

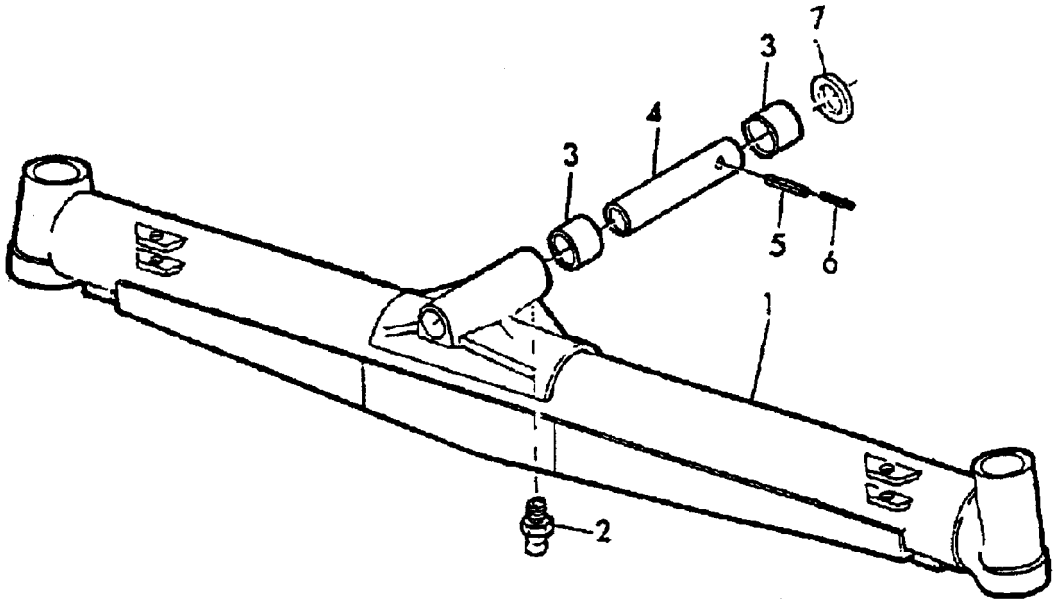

序号 KEY	件　号 PART NO.	名　称	DESCRIPTION	数量 QTY	SERIAL NO.	MODELS 3 0 7 0	备　注 REMARKS
1	AYC11881	后桥体焊合	REAR AXLE	1		×	
2	58M5573	油嘴	LUBRICATION FITTING	1		×	M6X1 GB1152-79
3	Z21592	衬套	BUSHING	2		×	
4	YC11272	销轴	SHAFT	1		×	
5	34M7048	弹性销	SPRINGPIN	2		×	8X45 GB879-86
6	34M7036	弹性销	SPRINGPIN	2		×	5X45 GB879-86
7	Z24651	垫圈	WASHER	4		×	

V SUPPORT REAR AXLE
后桥 V 型拉杆

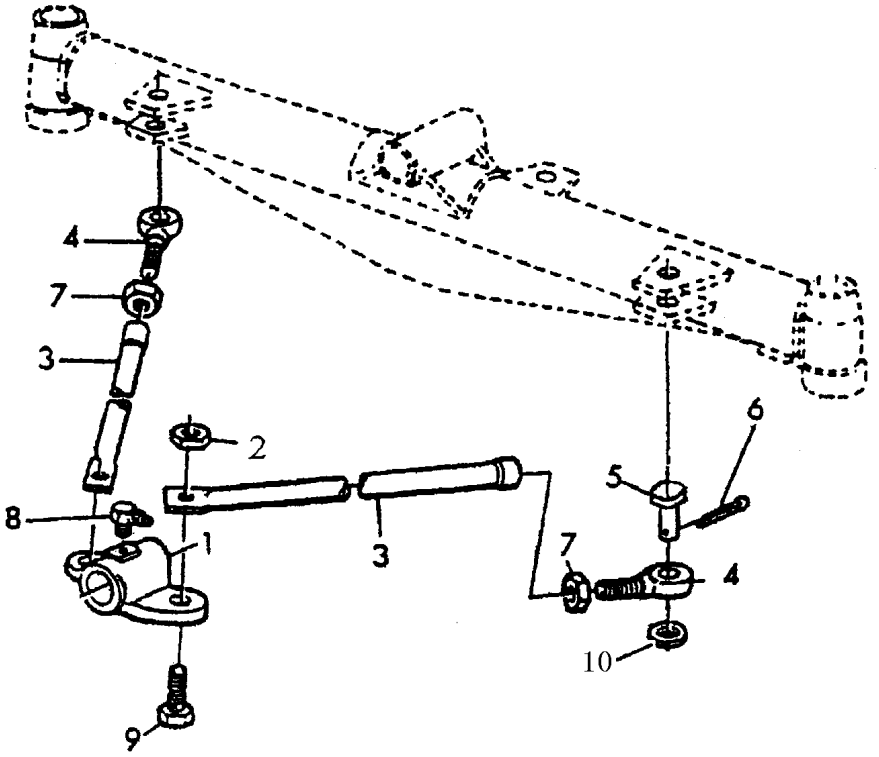

序号 KEY	件　号 PART NO.	名　称	DESCRIPTION	数量 QTY	SERIAL NO.	MODELS 3 0 7 0	备　注 REMARKS
1	AYC11417	支撑座	BEARING	1		×	
2	14G25162	螺母	NUT	2		×	M16 GB889-86 8Zn.D
3	AYC11882	拉杆	BRACE	2		×	
4	Z36731	活节螺栓	EYEBOLT	2		×	
5	45G11645	销	PIN	2		×	16X45 GB882-86
6	11M7022	开口销	QUICK LOCK PIN	2		×	4X30 GB91-86.D
7	14M7260	螺母	NUT	2		×	M16 GB6172-86 05Zn.D
8	58G30818	油嘴	LUBRICATION FITTING	1		×	M8X1X90° GB1153-79
9	19M7283	螺栓	CAP SCREW	2		×	M16×35 GB5783-86 8.8Zn.D
10	24G20016	垫圈	LOCK WASHER	2		×	16 GB848-85 Zn.D

SPINDLE KNUCKLE
转向拉杆总成

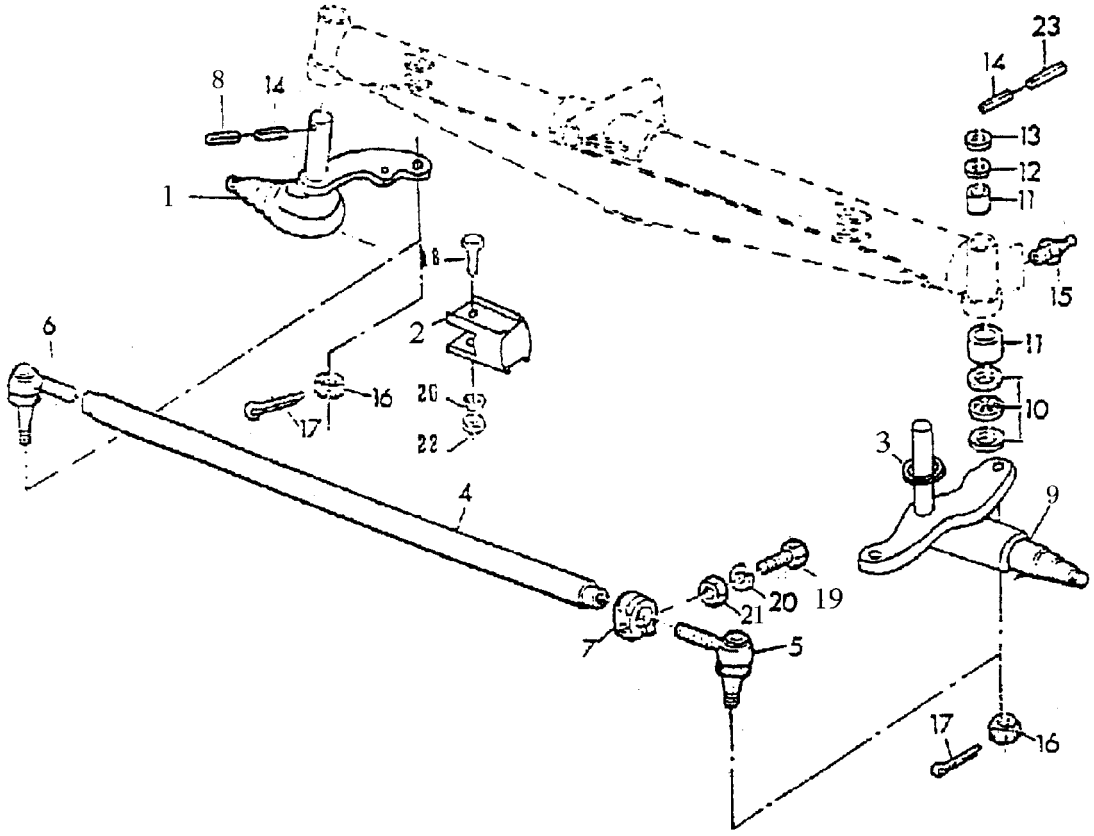

序号	件　号			数量		MODELS	备　　注
						3	
						0	
						7	
KEY	PART NO.	名　　称	DESCRIPTION	QTY	SERIAL NO.	0	REMARKS
1	AYC12139	短转向节轴焊合	KNUCKLE	1		×	
2	YC11255	挡块	STOP	2		×	
3	YC11269	垫圈	WASHER	2		×	
4	YC11278	横拉杆	TIE ROD	1		×	
5	AYC12235	球铰	BALL JOINT	1		×	
6	AYC12236	球铰	BALL JOINT	1		×	
7	YC17062	夹子	CLAMP	2		×	
8	34M7119	弹性销	SKPRINGPIN	2		×	5X65 GB879-86
9	AYC12140	长转向节轴焊合	KNUCKLE	1		×	
10	00G8109	轴承	THRUST WASHER	2		×	8109 GB301-84
11	YC16344	衬套	BUSHING	4		×	
12	Z39330	垫圈	WASHER	AR		×	0.5mm
13	Z39331	垫圈	WASHER	AR		×	2mm
14	34M7052	弹性销	SPRINGPIN	2		×	8x65 GB879-86
15	58M5573	油嘴	LUBRICTION FITTING	2		×	M6X1.00 GB1152-79
16	14G29189	螺母	NUT	2		×	M18X1.5 GB9459-88 05Zn.D
17	11M7024	开口销	COTTON PIN	2		×	4X36 GB91-86Zn.D
18	19M7179	螺栓	CAP SCREW	2		×	M10X50 GB5782-86 8.8 Zn.D
19	19M7169	螺栓	CAP SCREW	2		×	M10X35 GB5783-86 10.9Zn
20	12M7013	垫圈	LOCK WASHER	4		×	10 GB93-76 8Zn
21	14M7140	螺母	NUT	6		×	M10 GB6170-86Zn.D

REAR AXLE HOLDER
后桥支架

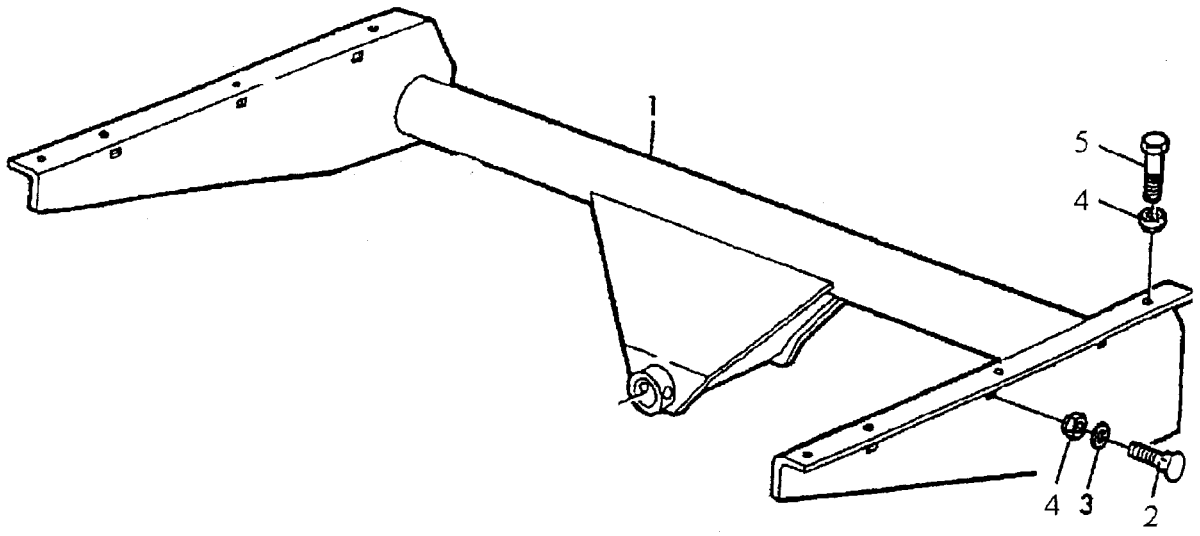

序号	件号			数量		MODELS 备注	
						3	
						0	
						7	
KEY	PART NO.	名称	DESCRIPTION	QTY	SERIAL NO.	0	REMARKS
1	AYC10392	后桥连接架	REARAXLE SUPPORT	1		×	
2	09G04535	螺栓	CAP SCREW	6		×	M12X35 GB10-8.8 Zn.D
3	24G00012	垫圈	WASHER	6		×	12 GB97.1-85 Zn.Dn
4	14G25122	螺母	NUT	14		×	M12 GB889-80.88 Zn.D
5	19M7285	螺栓	CAP SCREW	8		×	M12X30 GB5783-86 8.8Zn.D

REAR AXLE HOLDER
后桥支架

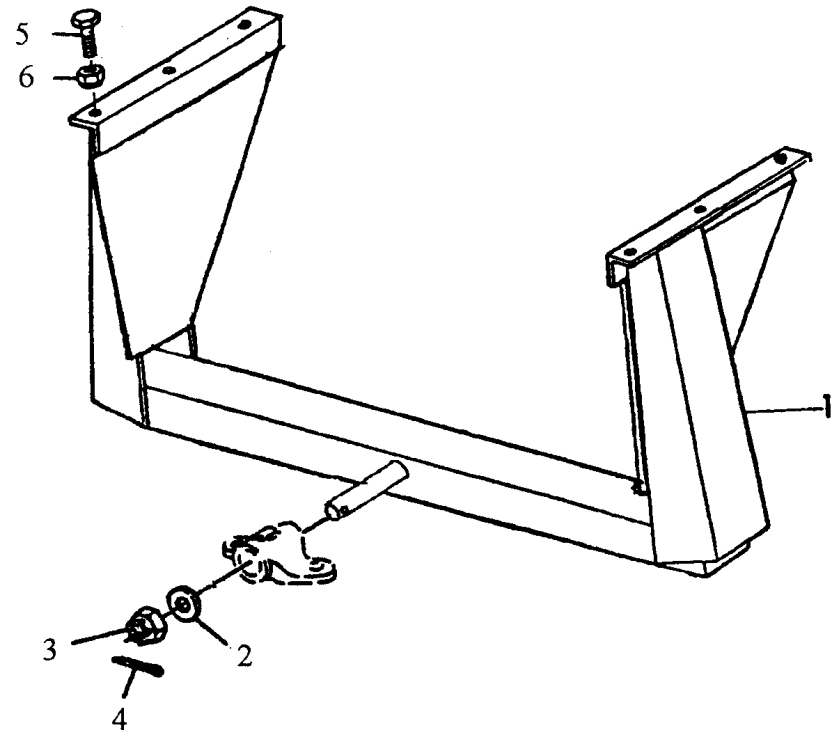

序号 KEY	件　号 PART NO.	名　称	DESCRIPTION	数量 QTY	SERIAL NO.	MODELS 备　注 3 0 7 0	REMARKS
1	AYC11883	横梁焊合	SUPPORT	1		×	
2	24G00016	垫圈	WASHER	2		×	16 GB848-85 Zn.D
3	14M7185	螺母	NUT	1		×	M16 GB6178-86 8Zn.D
4	11M7022	开口销	COTTON PIN	1		×	4X30 GB91-86 Zn.D
5	19G08530	螺栓	CAP SCREW	6		×	M10x30 GB5783-86 8.8Zn.D
6	14M7140	螺母	NUT	6		×	M10 GB6170-86 8.8 Zn.D

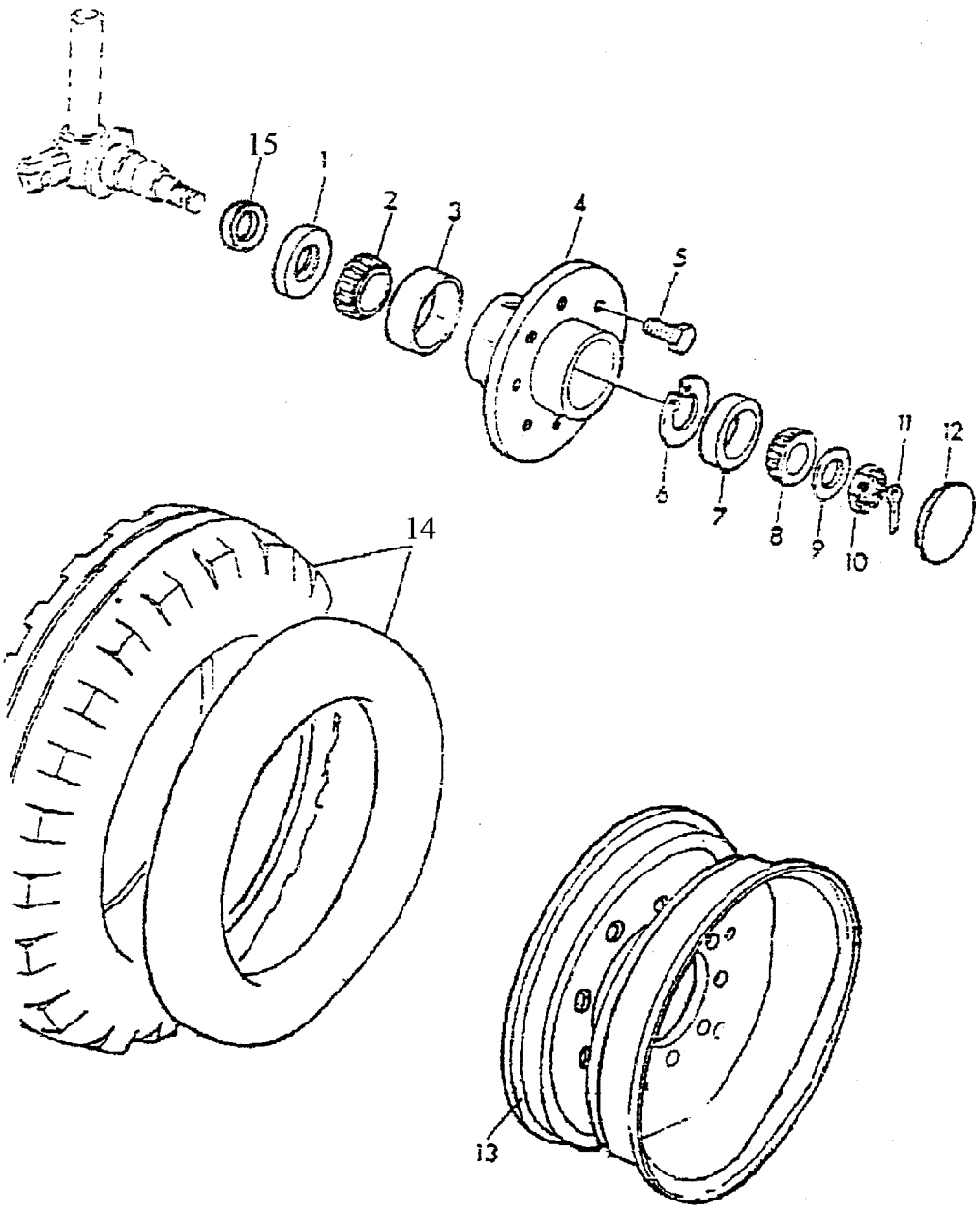
15
1
2
3
4
5
6
7
8
9
10
11
12
14
13

序号	件　号			数量		MODELS	备　　注
						3	
						0	
						7	
KEY	PART NO.	名　　称	DESCRIPTION	QTY	SERIAL NO.	0	REMARKS
1	YC12153	油封	SEAL	2		×	
2	00G2007109A	轴承内环	BEARING CONE	2		×	GB297-64
3	00G2007109B	轴承外环	BEARING CUP	2		×	GB297-64
4	YC12595	轮毂	HUB	2		×	
5	YC16643	螺栓	CAPSCREW	16		×	
6	40M7043	挡圈	SNAPRING	2		×	62 GB893.1-86 Zn.D
7	00G7506EB	轴承外环	BEARING CUP	2		×	7506EB GB297-84
8	00G7506EA	轴承内环	BEARING CONE	2		×	7506EA GB297-84
9	YC15439	垫圈	WASHER	2		×	
10	14G29239	螺母	NUT	2		×	M22X1.5 GB9459-88.05Zn
11	11M7087	开口销	COTTON PIN	2		×	4X40 GB91-86Zn.D
12	YC16306	端盖	COVER	2		×	
13	AYC10744	轮辋焊合	RIM	2		×	
14	AS27855	轮胎	TYRE	2		×	10-15 （普通轮胎总成）
	D33005	内胎	INNER TUBE	2		×	10-15 （普通轮胎）
	D33006	外胎	COVER	2		×	10-15 （普通轮胎）
	AYC11464	轮胎	TYRE	2		×	10-15 (人字轮胎总成)
	D33005	内胎	INNER TUBE	2		×	10-15 (人字轮胎)
	S40073	外胎	COVER	2		×	10-15 (人字轮胎)
15	YC16143	垫圈	WASHER	2		×	

液压管路（转向系统）
HYDRAULIC

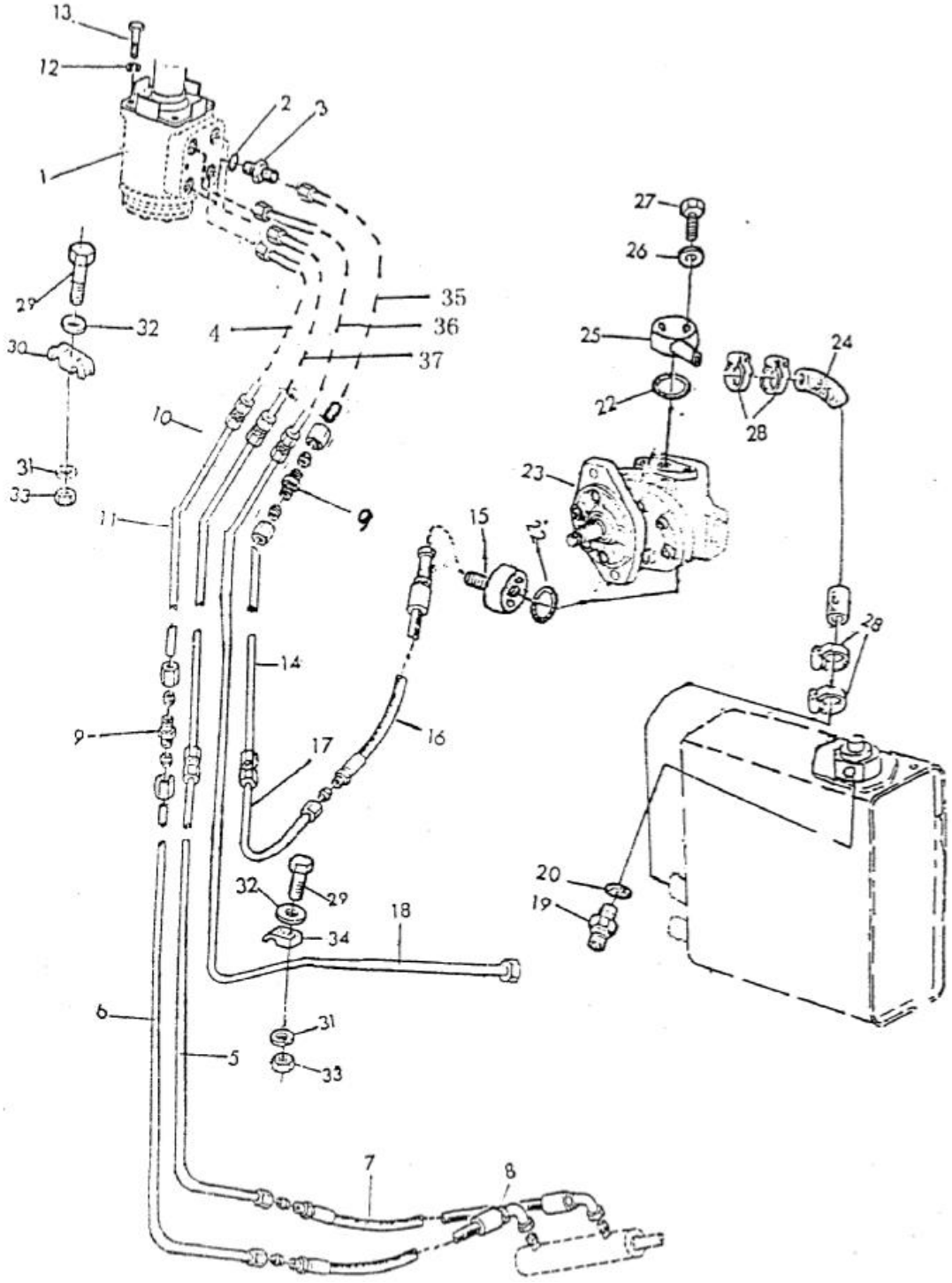

序号 KEY	件　号 PART NO.	名　　称	DESCRIPTION	数量 QTY	SERIAL NO.	MODELS 3070W L	3070W Y	备　　注 REMARKS
1	AYC10933	转向机总成	STEEINGMETERINGPUMP	1		×	×	
2	YC16295	密封圈	O-RING	4		×		20
3	YC16294	接头体	UNION FITTING	4		×		
4	AS38823	铁管	HYDRAULIC HOSE	4		×	×	
5	AD38-14	转向油管	LINE	1		×	×	
6	AD38-16	转向油管	LINE	1		×	×	
7	AYC12731	高压软管	HYDRAULIC.HOSE	1		×	×	
8	AZ25674	高压软管	HYDRAULIC.HOSE	1		×	×	
9	YC16844	接头体	UNION FITTING	7		×	×	
10	AD38-13	转向油管	LINE	1		×	×	
11	AD38-15	转向油管	LINE	1		×	×	
12	12G45010	垫圈	WASHER	4		×	×	10　GB93-87　Zn.D
13	19G02340	螺栓	CAP SCREW	4		×	×	M10×40 GB5782-86 8.8Zn.D
14	AD38-47	泵转向油管	LINE	4			×	
15	YC11597	法兰接头	UNION FITTING	1		×	×	
16	AYC12731	高压软管	HYDRAULIC HOSE	1		×	×	
17	AD38-47	转向油管	LINE	1			×	
18	YC12264	接头体	UNION FITTING	1		×	×	
19	YC13010	密封圈	O-RING	1		×	×	18 JB1002-77
20	YC13005	O 型圈	O-RING	1		×		26×24 GB1235-76
21	AYC10755	双联泵	HYDRAULIC PUMP	1			×	玉柴用
	AYC10465	齿轮泵	UNION FITTING	1		×		右旋洛柴
22	YC12381	吸油管	OIL LINE	1			×	
23	AYC10471	法兰接头焊合	UNION FITTING	1			×	
24	12G45008	垫圈	WASHER	2		×	×	8 GB93-87Zn.D
25	19G02240	螺栓	CAP SCREW	2		×	×	M8×35 GB5782-86 8.8 Zn.D
26	YC13988	夹子	CLAMP	4		×	×	
27	19G00135	螺栓	CAP SCREW	AR		×	×	M6×35 GB5780-86 8.6 Zn.D
28	Z34955	夹子	CLAMP	AR		×	×	
29	12G45006	垫圈	WASHER	AR		×	×	6 GB93-87Zn.D
30	24G00006	垫圈	WASHER	AR		×	×	6 GB97-85Zn.D
31	14G14060	螺母	NUT	AR		×	×	M6 GB41-86 5Zn.D
32	Z34952	夹子	CLAMP	AR		×	×	
33	AS38819	铁管	HYDRAULIC HOSE	1		×	×	
34	AS38821	铁管	HYDRAULIC HOSE	1		×	×	
35	AS38825	铁管	HYDRAULIC HOSE	1		×	×	

HYDRAULIC LINE (RESERVOIR、PUMP、 CONTROL VALVE)
液压管路（油箱、泵、控制阀）

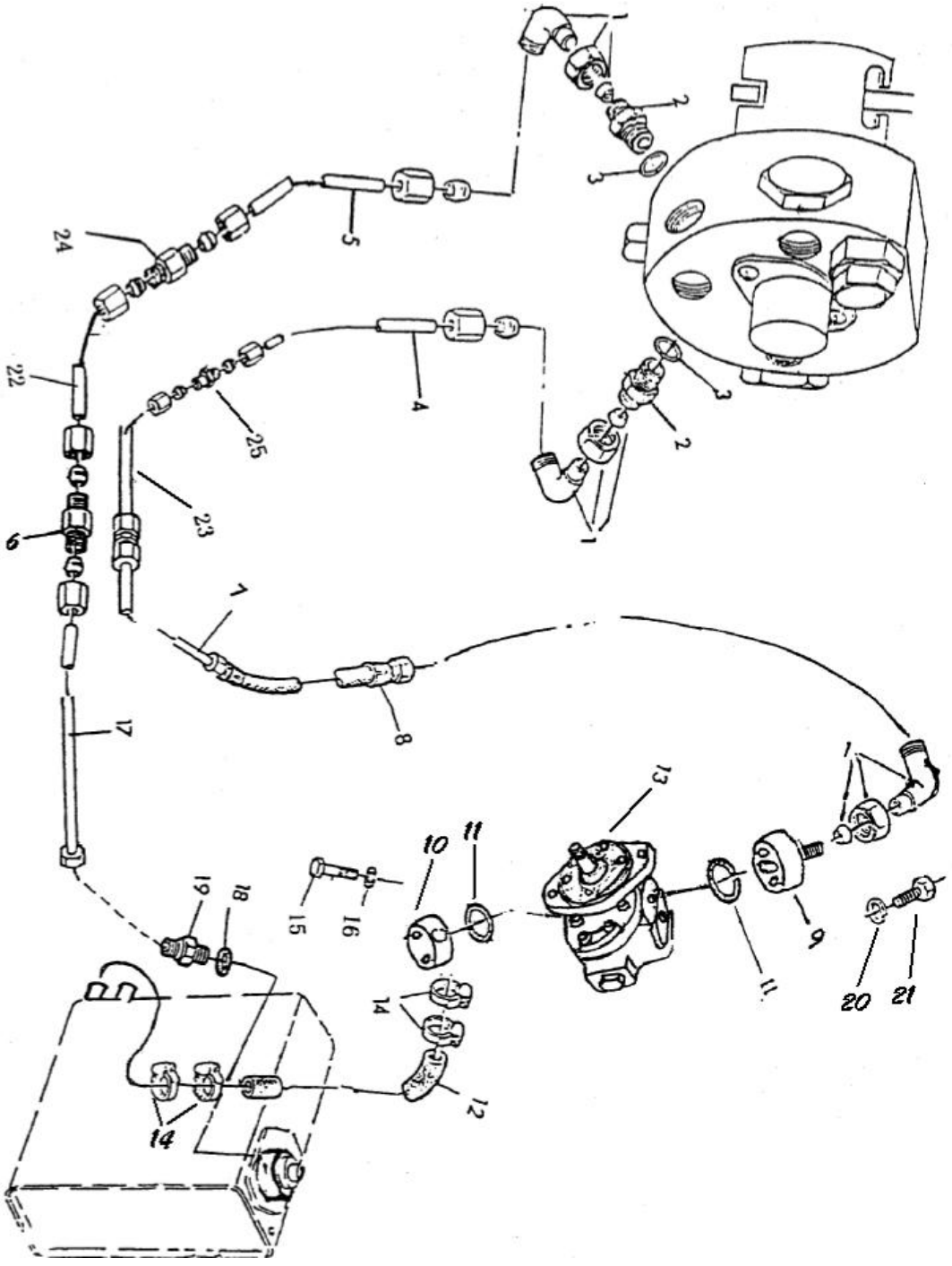

序号	件　号			数量		MODELS 330770W	MODELS 330770W	备　注
KEY	PART NO.	名　称	DESCRIPTION	QTY	SERIAL NO.	L	Y	REMARKS
1	AZ22524	直角接头体	ELBOW	3		×	×	
2	YC11593	接头体	FITTING	2		×	×	
3	YC12807	0 型圈	O-RING	2		×	×	20×2.4 GB 1256-7
4	AS38801	油管	LINE	1		×	×	
5	AD38805	油管	LINE	1			×	
6	YC12953	接头体	UNION FITTING	4		×	×	
7	AD38-85	油管	LINE	1			×	
8	AYC12821	高压胶管	HYDRAULIC HOSE	1		×	×	
9	YC11596	法兰接头	UNI0N FITTING	1		×	×	
10	AYC10471	法兰接头	UNI0N FITTING	1			×	
11	YC13005	0 型圈	O-RING	3		×	×	26×2.4
12	YC12382	吸油胶管	OIL-LINE	1			×	
13	AYC10755	双联齿轮泵	HYDRAULIC PUMP	1			×	
	AYC10611	齿轮泵	GEAR PUMP	1		×		洛柴左旋
14	S30090	软管夹子	CLAMP	2		×	×	$20-$40
15	19G02235	螺栓	CAP SCREW	2		×	×	M8×35 GB5782-86 4 Zn.D
16	12G45008	垫圈	LOCK SCREW	2		×	×	8 GB93-87Zn.D
17	YC13010	0 型圈	O-RING	1		×	×	18 JB1002-77
18	YC16914	接头体	UNION FITTING	1		×	×	
19	12G45008	垫圈	LOCK SCREW	6		×	×	8 GB93-87 Zn.D
20	19G08425	螺栓	CAP SCREW	4		×	×	M8×25 GB5783-86 8.8 Zn.D
21	AS38807	油管	LINE	1		×	×	
22	AS38803	油管	LINE	1		×	×	
23	YC12953	接头体	UNION FITTING	1		×	×	
24	YC12953	接头体	UNION FITTING	1		×	×	

HYDRAULIC LINE
液压管路（拨禾轮油缸）

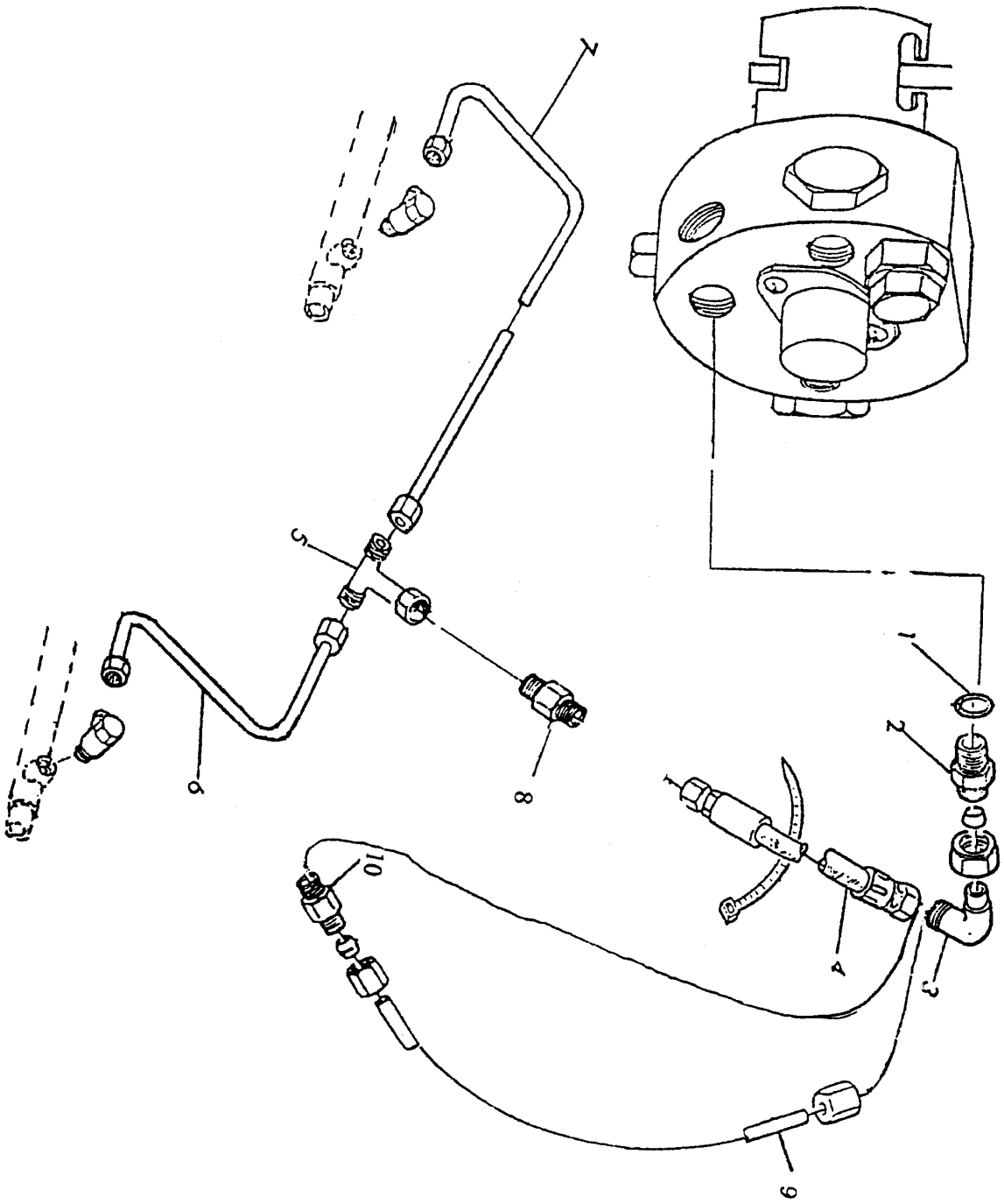

序号	件　号			数量		MODELS 307W	MODELS 307W	备　　注
KEY	PART NO.	名　　称	DESCRIPTION	QTY	SERIAL NO.	L	Y	REMARKS
1	YC12807	O 型圈	O—RING	1		×	×	20X2.4 GB 1235-76
2	YC11595	接头体	FITTING	1		×	×	
3	AZ21973	直角接头体	ELBOW	1		×	×	
4	AYC10467	高压胶管	HYDRAULIC.HOSE	1		×	×	
5	AYC10463	三通接头	TEE-FITTING	1		×	×	D38607(单件) 2.5m 割台用
6	AD38-01	油管总成	OIL-LINE	1		×	×	2.75m 割台用
	AD38-56	油管总成	OIL-LINE	1		×	×	2.5m 割台用
7	AD38-02	油管总成	OIL-LINE	1		×	×	2.75m 割台用
	AD38-57	油管总成	OIL-LINE	1		×	×	2.5m 割台用
8	YC16850	直通接头	OIL-LINE	1		×	×	2.75m 割台用
9	AS41647	油管总成	OIL-LINE	1		×	×	
10	YC16844	接头体	FITTING	1		×	×	

HYDRAULIC LINE
液压管路（行走变速）

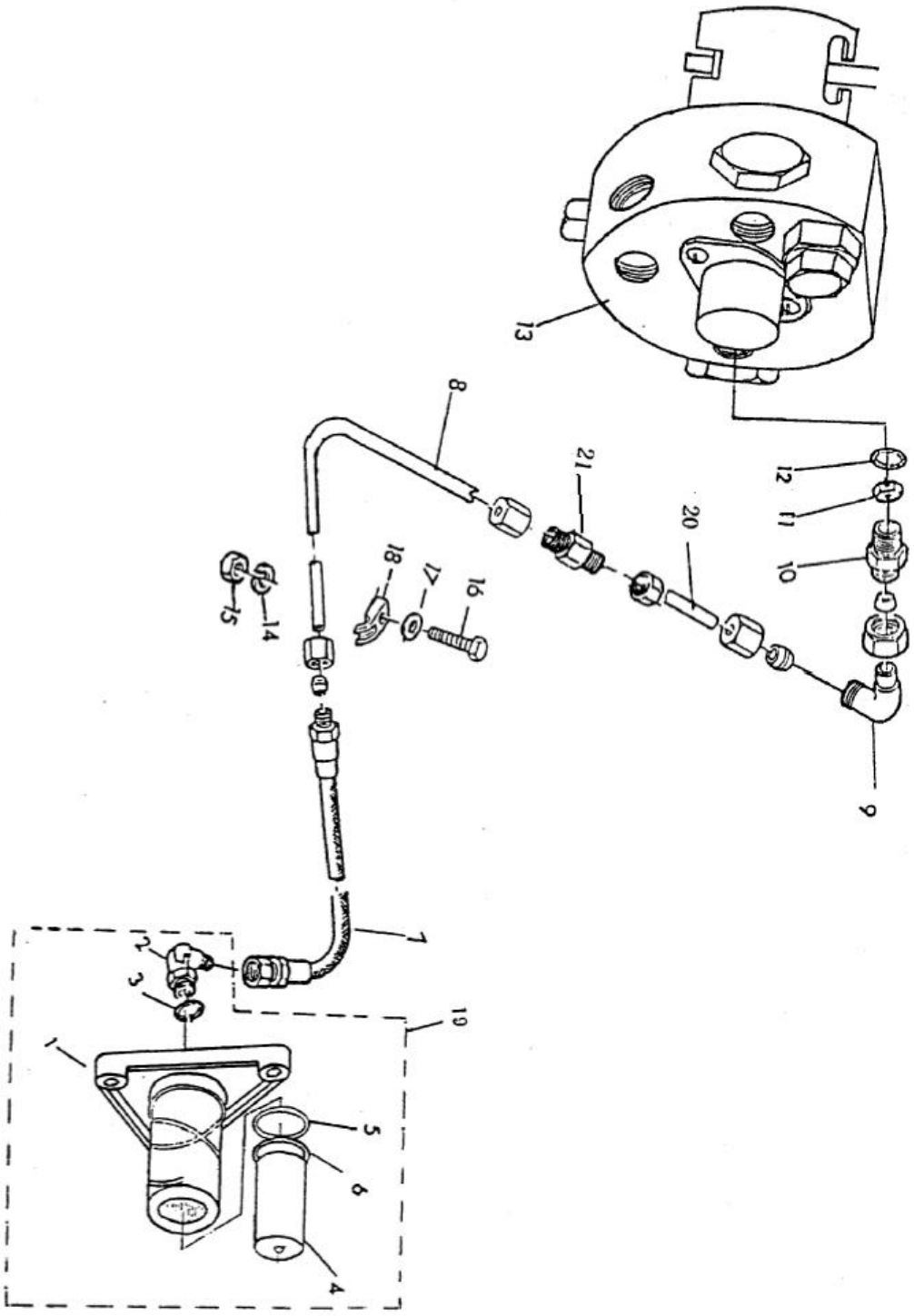

序号	件　号			数量		MODELS 330770W	MODELS 330770W	备　注
KEY	PART NO.	名　称	DESCRIPTION	QTY	SERIAL NO.	L	Y	REMARKS
1	YC18767	油缸套	BARREL	1		×	×	
2	AZ31666	缸头	ELBOW	1		×	×	
	AYC13325	缸头	ELBOW	1		×	×	国产件
3	YC18766	密封圈	SEAL	1		×	×	22×2.4 GB 1235-76
4	F38361	油缸柱塞	ROD	1		×	×	
5	YC18764	YX 型密封圈	SEAL	1		×	×	45
6	YC18763	O 型密封圈	O-RING	1		×	×	51×4 GB1235-76
7	AYC12814	高压胶管	HYDRAULIC HOSE	1		×	×	
8	AD38815	油管总成	OIL LINE	1		×	×	
9	AZ21974	直角接头	ELBOW	1		×	×	
10	YC11592	接头体	UNION FITTING	1		×	×	
11	Z37688	节流片	ORIFICE	1		×	×	
12	YC12807	O 型圈	O-RING	1		×	×	20X2.4
13	AYC10466	控制阀	CONTROL VALVE	1		×	×	
14	12G45006	垫圈	WASHER	1		×	×	M6 GB93-87 Zn.D
15	14G14060	螺母	NUT	1		×	×	M6 GB41-86 5 Zn.D
16	19G00135	螺栓	CAP SCREW	1		×	×	M6×35 GB5780-86 4.6Zn.D
17	24G00006	垫圈	WASHER	1		×	×	6 GB97.1-85 Zn.D
18	Z34952	夹子	CLAMP	AR		×	×	
19	AYC10464	油缸总成	HYDRAULIC HOSE	1		×	×	含 1、2、3、4、5、6
20	AD38813	油管	OIL-LINE	1		×	×	
21	YC16844	接头体	UNION FITTING	1		×	×	

REEL LIFTINGCYLINDER, RIGHT-HAND
拨禾轮提升油缸、右侧

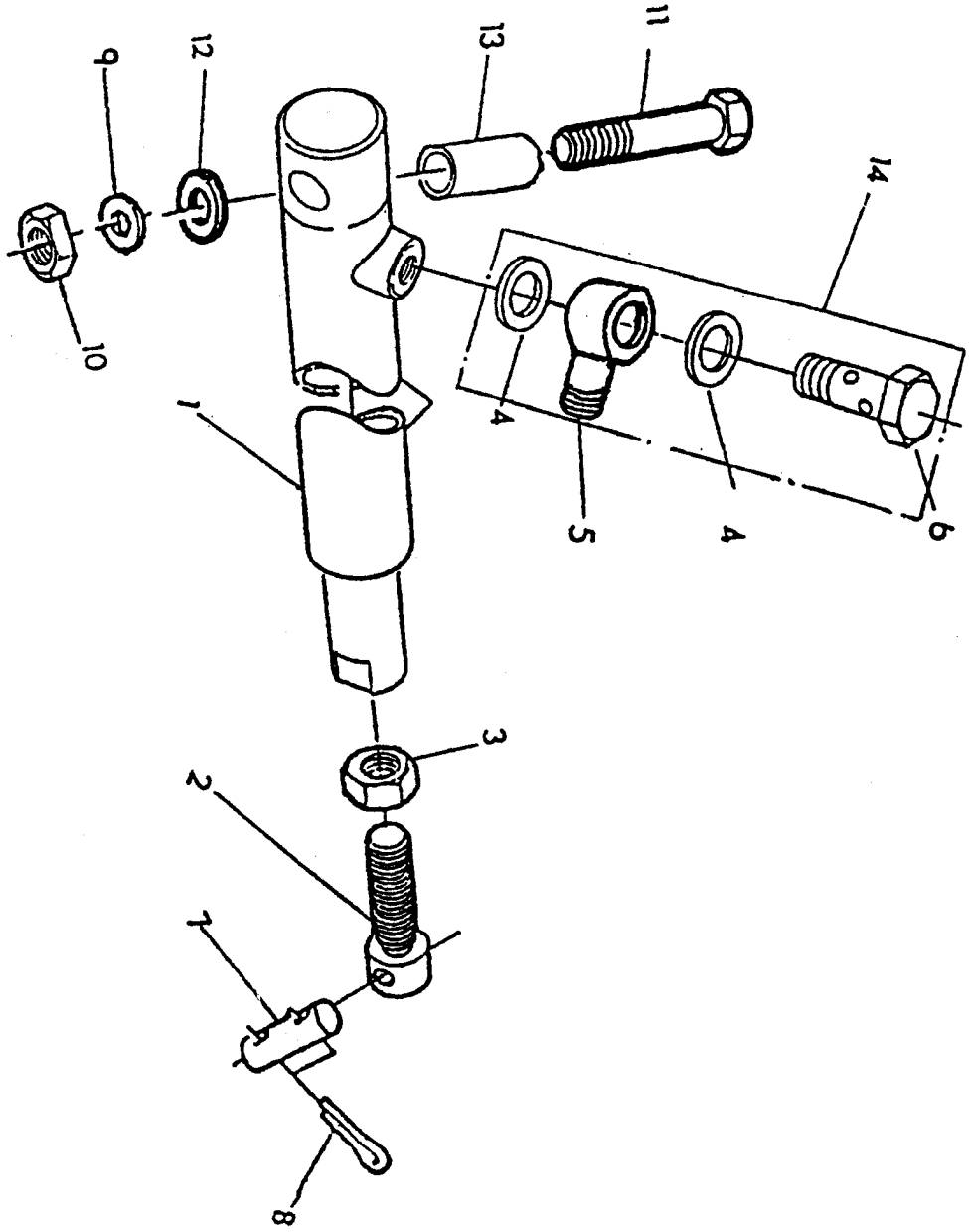

序号	件　号			数量		MODELS 3 0 7 0 W L	MODELS 3 0 7 0 W Y	备　　注
KEY	PART NO.	名　　称	DESCRIPTION	QTY	SERIAL NO.			REMARKS
1	AYC12329	拨禾轮升降油缸	KIT	2		×	×	
2	Z31090	调节螺栓	SET SCREW	2		×	×	
3	14G03189	螺母	NUT	2		×	×	M18X1.5 GB6173-86 05Zn.D
4	YC13009	密封铜垫圈	WASHER	4		×	×	
5	YC13011	铰接接头	BALL-STUD	2		×	×	
6	YC13012	中空螺栓	CAP SCREW	2		×	×	
7	44G41849	销	PIN	4		×	×	销 18X65 GB880-86 Zn.
8	11G02230	开口销	COTTER PIN	2		×	×	5X30 GB91-86 Zn.D
9	12G45016	垫圈	WASHER	2		×	×	16 GB93-87 Zn.D
10	14G00162	螺母	NUT	2		×	×	M16 GB 52-86 8 Zn.D
11	19G02656	螺栓	CAP SCREW	2		×	×	M16X100 GB572-86 8.8Zn.D
12	24G00016	垫圈	WASHER	2		×	×	16 GB97.1-85 Zn.D
13	YC16557	油缸间管	BUSHING	2		×	×	
14	AYC10575	铰接管接头	UNION FITTING	1		×	×	6 GB93-87 Zn.D

HYDRAULIC LINE
液压管路（割台提升油缸）

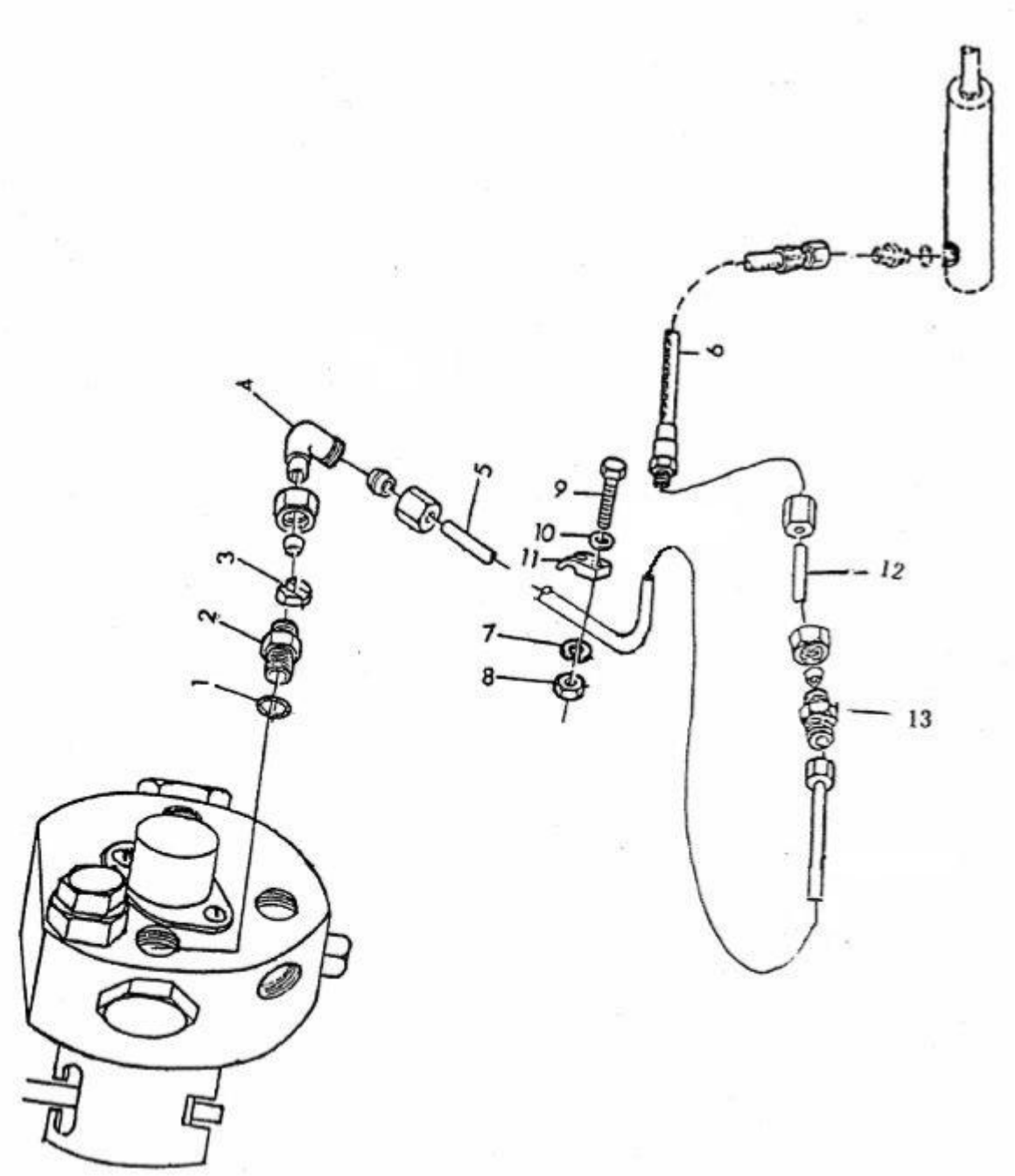

序号 KEY	件　号 PART NO.	名　称	DESCRIPTION	数量 QTY	SERIAL NO.	MODELS 330 700 WL	MODELS 330 700 WY	备　注 REMARKS
1	YC12807	O型圈	0-RING	1		×	×	20×2.4 GB1256-76
2	YC11594	接头体	UNION-FITTING	1		×	×	
3	YC11576	节流片	ORIFICE	1		×	×	
4	AZ21974	直角接头体	ELBOW	1		×	×	
5	AS38809	油管总成	OIL LINE	1		×	×	
6	AYC12814	高压胶管	HYDRAULIC .HOSE	1		×	×	
7	12G45006	垫圈	WASHER	AR		×	×	6 GB93-87 Zn.D
8	14G14060	螺母	NUT	AR		×	×	M6 GB 41-86 5 Zn.D
9	14G00140	螺栓	CAP SCREW	AR		×	×	M6×40 GB5780-86 8.6Zn.D
10	24G00006	垫圈	WASHER	AR		×	×	6 GB97.1 Zn.D
11	Z34952	夹子	CLAMP	AR		×	×	
12	AS38811	管	HYDRAULIC LOSE	1		×	×	
13	Z32962	接头体	UNION FITTING	1		×	×	

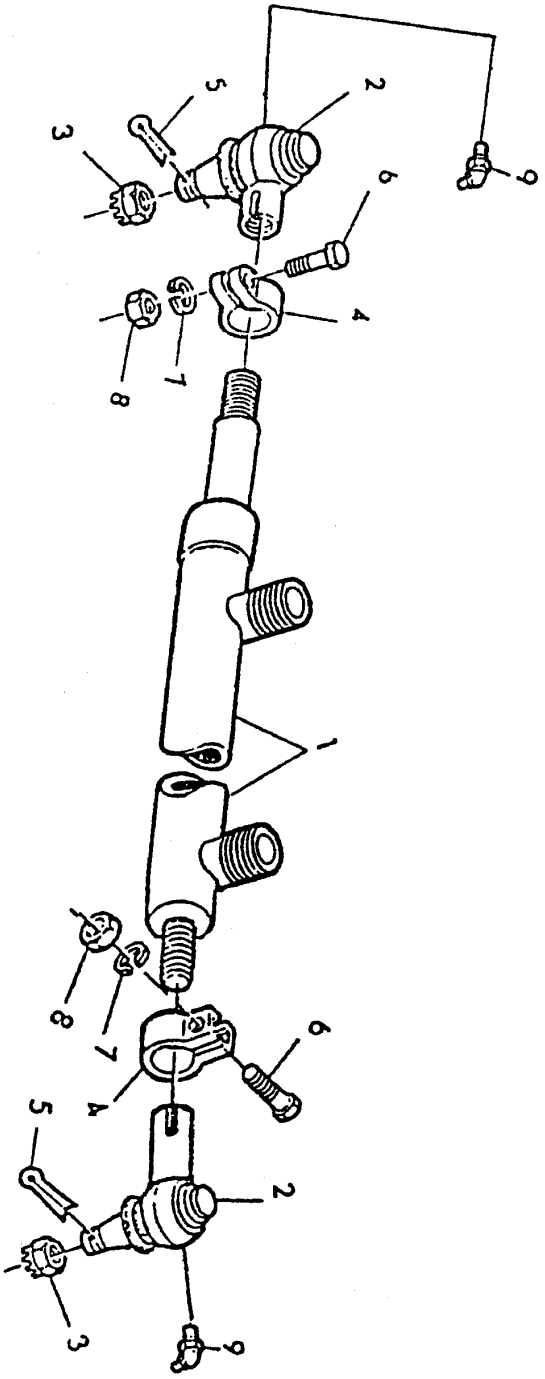
5
2
3
9
6
4
8
7
1
8
7
6
4
5
2
3
9

序号	件　号			数量		MODELS 330 770 WL	MODELS 330 770 WY	备　注
KEY	PART NO.	名　称	DESCRIPTION	QTY	SERIAL NO.			REMARKS
1	AYC10572	转向油缸总成	KIT	1		×	×	
2	AYC12794	转向球铰总成	BALL-STUD	2		×	×	
3	14G29189	螺母	NUT	2		×	×	M8X1.5 GB9495-88 05Zn.D
4	Z34938	夹子	CLAMP	2		×	×	
5	11G02036	开口销	COTTER PIN	2		×	×	4X36 GB91-86 Zn.D
6	19 08535	螺栓	CAP SCREW	2		×	×	M0X35GB 5783-86 8.8Zn.D
7	12G45010	垫圈	WASHER	2		×	×	10 GB93-87 Zn.D
8	14G00102	螺母	NUT	2		×	×	M10 GB 6170-86 8 Zn.D
9	58G21010	油杯	LUBRICATION-FTTTING	2		×	×	M10X1X90¼ GB 1152-79

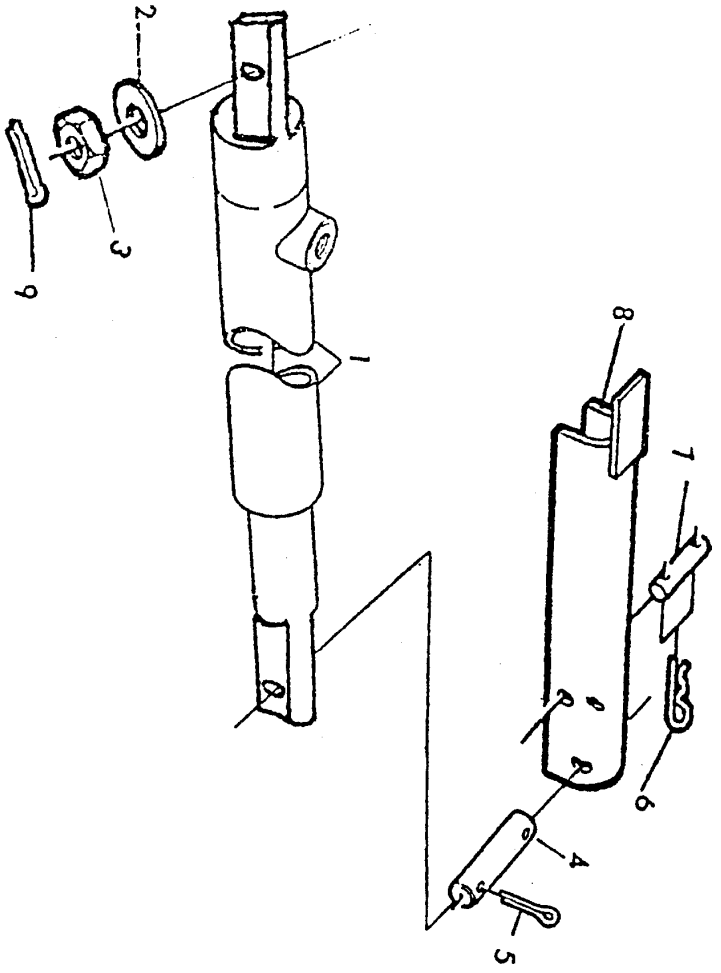
2
3
9
1
8
7
6
4
5

序号	件　号			数量		MODELS 330770W	330770W	备　　注
KEY	PART NO.	名　　称	DESCRIPTION	QTY	SERIAL NO.	L	Y	REMARKS
1	AYC10468	割台升降油缸	KIT	1		×	×	
2	24G35016	垫片	WASHER	1		×	×	16 GB95-85 Zn.D
3	14G09162	螺母	NUT	1		×	×	M16 GB6178-86 8Zn.D
4	YC11601	销	PIN	1		×	×	
5	11G02230	开口销	COTTER PIN	2		×	×	5X30 GB91-86 Zn.D
6	J16931	弹性销	CLIP	2		×	×	
7	YC16898	锁销	PIN	1		×	×	
8	AYC10469	锁定支架	GUARD	1		×	×	
9	11G02036	开口销	COTTER PIN	1		×	×	5X30 GB91-86 Zn.D

HYDRAULIC OIL RESERVOIR
液压油箱

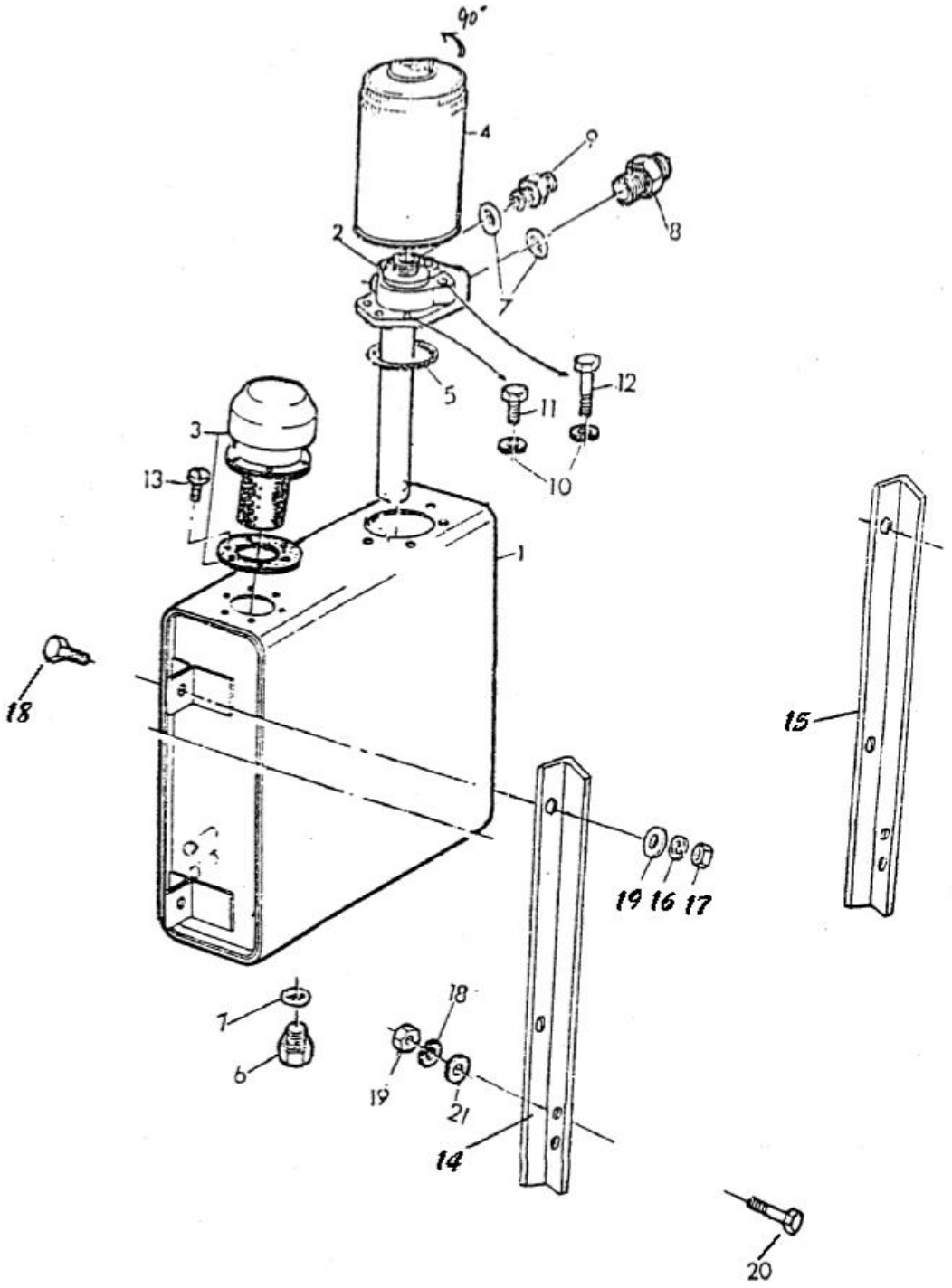

序号	件　号			数量		MODELS 306W	MODELS 307W	备　　注
KEY	PART NO.	名　　称	DESCRIPTION	QTY	SERIAL NO.	L	Y	REMARKS
1	AS39756	油箱	HYDRAULIC RESERVOIR	1			×	玉柴用
	AYC11181	油箱	HYDRAULIC RESERVOIR	1		×		洛柴用
2	AYC10609	滤清器盖	FILTER	1		×	×	（盖S11099,回油管S23281）
3	AYC12918	液压滤清器	FILTER NECK	1		×	×	(胶垫D38009)
	AZ23878	滤芯		1		×	×	
4	AZ22878	过滤器	FILTER ELEMENT	1		×	×	
5	S20951	0型圈	O-RING	1		×	×	90×5.7 GB1002-77
6	YC12257	螺塞	PIPE PLUG	1		×	×	
7	YC13010	密封圈	O-RING	3		×	×	18 JB1002-77
8	YC16914	直角接头	FITTING	1		×	×	
9	YC12264	直角接头	FITTING	1		×	×	
10	12G45006	垫圈	LOCK WASHER	6		×	×	6 GB93-87 Zn.D
11	19G01125	螺栓	CAP SCREW	3		×	×	M6×25 GB5781-86 8.6Zn.D
12	19G00147	螺栓	CAP SCREW	3		×	×	M6×25 GB5780-86 4.6Zn.D
13	21G08212	螺钉	SCREW	6		×	×	M4×12 GB67-85 4.8Zn.D
14	YC14229	油箱支撑角钢（左）	SUPPORT	1		×	×	
15	YC14228	油箱支撑角钢（右）	SUPPORT	1		×	×	
16	12G45008	垫圈	LOCK WASHER	5		×	×	8 GB93-87 Zn.D
17	14G00082	螺母	NUT	9		×	×	M8 GB6170-86 Zn.D
18	19G08425	螺栓	CAP SCREW	9		×	×	M8×25GB5783-86 8.8Zn.D
19	24G00008	垫圈	WASHER	5		×	×	8 GB97-85 Zn.D

SUPPORT
液压泵支架

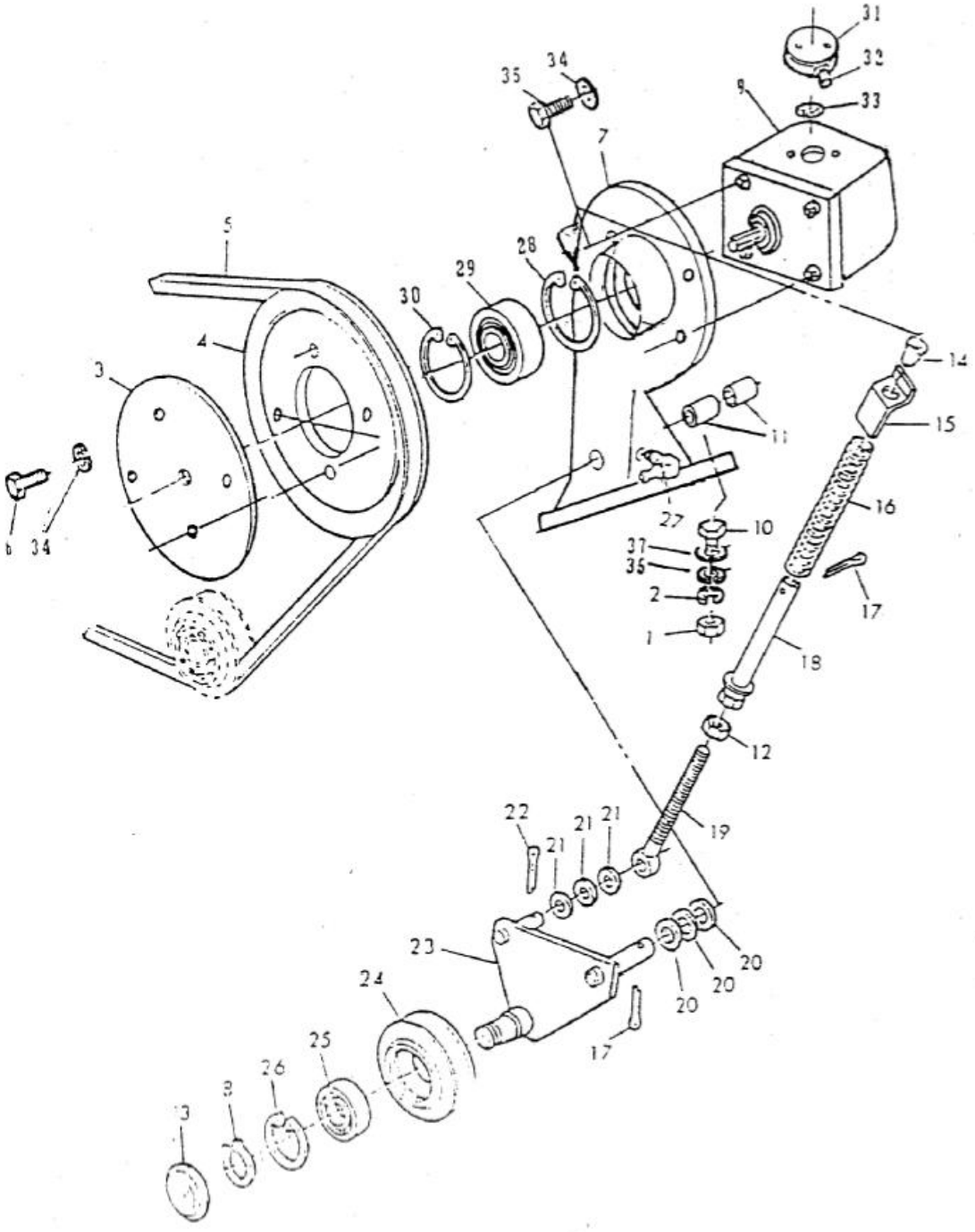

序号	件　号			数量		MODELS 330 70W	MODELS 330 70W	备　注
KEY	PART NO.	名　称	DESCRIPTION	QTY	SERIALNO.	L	Y	REMARKS
1	14G00102	螺母	NUT	3			×	M10 GB670-86.8Zn.D
	14G25102	螺母	NUT	3			×	M10
2	24G00010	垫圈	WASHER	3			×	10 GB97.1-85Zn.D
3	YC11598	驱动法兰	DRIVER	1			×	
4	YC11581	皮带轮	PULLEY	1			×	
5	YC17499	皮带	BELT	1			×	
6	19G08425	螺栓	CAP SCREW	4			×	M8×25 GB5783-86 8.8Zn.D
7	YC11583	液压泵支架	SUPPORT	1			×	
8	40G02020	挡圈	SNAP RING	1			×	20 GB894
9	AYC10755	液压泵	HYDRAULIC PUMP	1			×	无锡、玉柴用双联泵
10	19G02235	螺栓	CAP SCREW	3			×	M10×35 GB5783 8.8Zn.D
	19G08545	螺栓	CAP SCREW	3			×	M8×34
11	Z41255	衬套	SPACER	2			×	
12	14G00102	螺母	NUT	1			×	M10 GB6170-86 8Zn.D
13	YC12348	端盖	CAP	1			×	
14	Z22711	塞堵	PLUG	1			×	
15	Z38783	座	HOLDER	1			×	
16	Z34825	弹簧	SPRING	1			×	
17	11G02030	销	COTTER PIN	2			×	4×30 GB91-86Zn.D
18	AYC12429	导向装置	GUIDE	1			×	
19	Z38738	活节螺栓	EYEBOLT	1			×	
20	L19386	垫圈	WASHER	6			×	
21	24G00010	垫圈	WASHER				×	10 GB97.1-85.Zn.D
22	11G02030	销	COTTER PIN	1			×	13×16 GB91-86
23	AYC10641	支架	HOLDER	1			×	
24	YC11967	张紧轮	IDLER	1			×	
25	180204	轴承	BALLBEARING	1			×	
26	40G00047	挡圈	SNAP RING	1			×	GB893
27	58G30818	油杯 90°	LUBRICETION FITTING	1			×	M8×1 GB1153-79
28	40G02035	挡圈	SNAP RING	1			×	35 GB894.1-86
29	180207	轴承	BALLBEARING	1			×	GB279
30	40G00072	挡圈	SNAP RING	1			×	72 GB893.1-86
31	AYC10610	接头焊合	ELBOW	1			×	
	AS38-60	接头焊合	ELBOW	2			×	
32	YC11597	接头	ELBOW	2			×	
33	YC13005	O 型圈	O-RING	2			×	26×2.4 GB1235
34	12G45008	垫圈	WASHER	6			×	GB93
35	19G08420	螺栓	CAP SCREW	4			×	M8×30 GB5783-8.8Zn.D
36	Z23954	垫片	WASHER	3			×	
37	Z30294	垫片	WASHER	3			×	
38	S37629	垫片	WASHER	4			×	
39	YC12401	减振垫	WASHER	2			×	

SIDE PANEL RIGHT HAND
右側壁

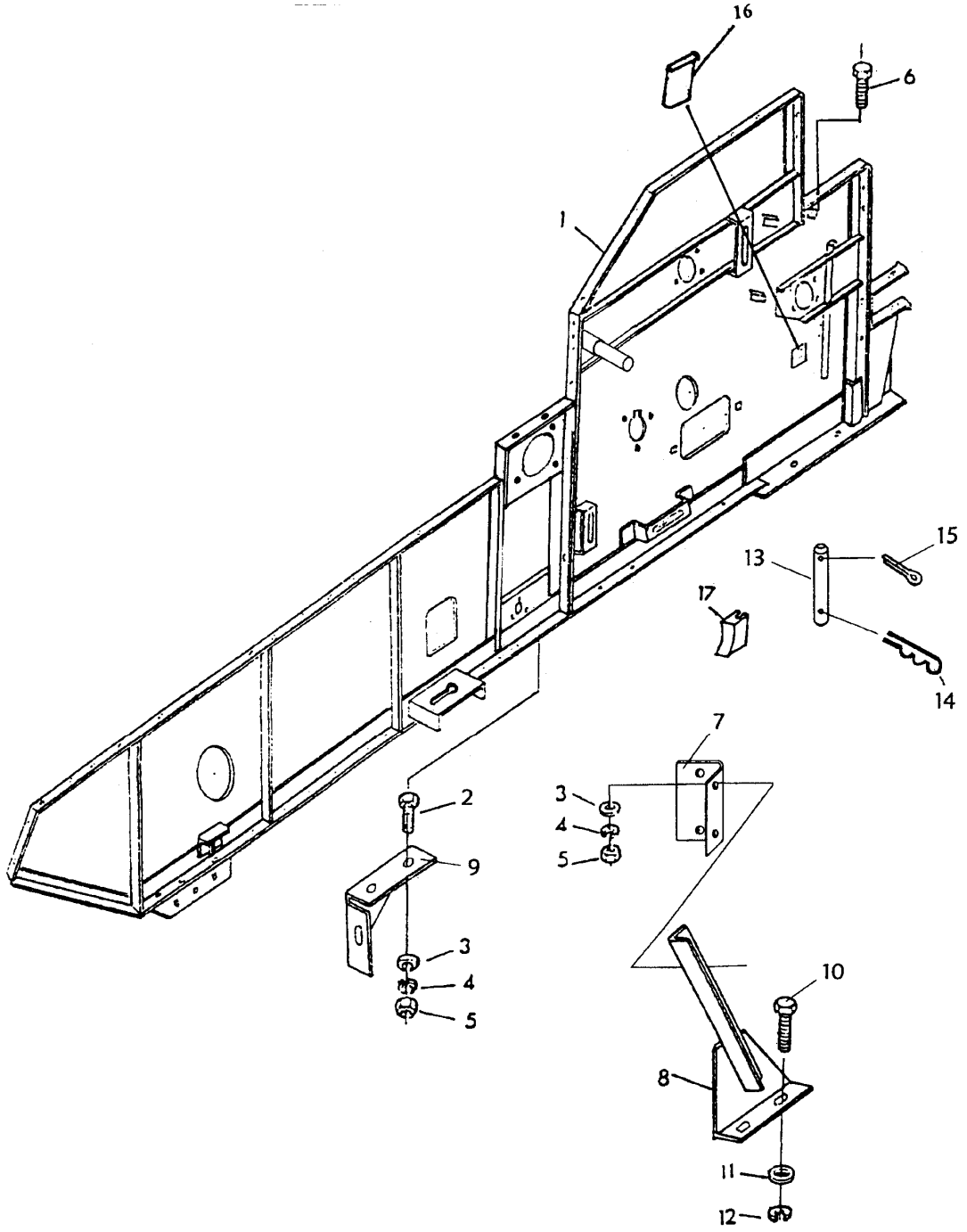

序号 KEY	件　号 PART NO.	名　　称	DESCRIPTION	数量 QTY	SERIAL NO.	MODELS 3 0 7 0	备　　注 REMARKS
1	AYC10389	右侧壁	SIDE WALL	1		×	
2	19G02340	螺栓	CAP SCREW	3		×	M10X40 GB5782-86 8.8 Zn
3	24G00010	垫圈	WASHER	11		×	10 GB97.1-85 Zn.D
4	12G45010	弹簧垫圈	LOCK WASHER	11		×	10 GB93-87 Zn.D
5	14G00102	螺母	NUT	11		×	M10 GB6170-86 8 Zn.D
6	19G08530	螺栓	CAP SCREW	8		×	M10X30 GB5783-86 8.8Zn
7	YC11240	上支板	PLATE	1		×	
8	AYC10388	右支架焊合	HOLDER	1		×	
	AYC10429	左支架焊合	HOLDER	1		×	
9	YC11221	右固定板	HOLDER	1		×	
10	19G08835	螺栓	CAP SCREW	2		×	M16X35 GB5783-86 8.8Zn
11	24G00016	垫圈	WASHER	2		×	16 GB97.1-85 Zn.D
12	12G45016	弹簧垫圈	LOCK WASHER	2		×	16 GB93-87 Zn.D
13	YC10751	插销	PIN	1		×	
14	Z32401	弹簧销	PIN	1		×	
15	19G02330	销	PIN	1		×	
16	YC14531	窥视活门	COVER	1		×	
17	YC10694	导座	GUIDE	1		×	

SIDE PANEL LEFT HAND
左侧壁

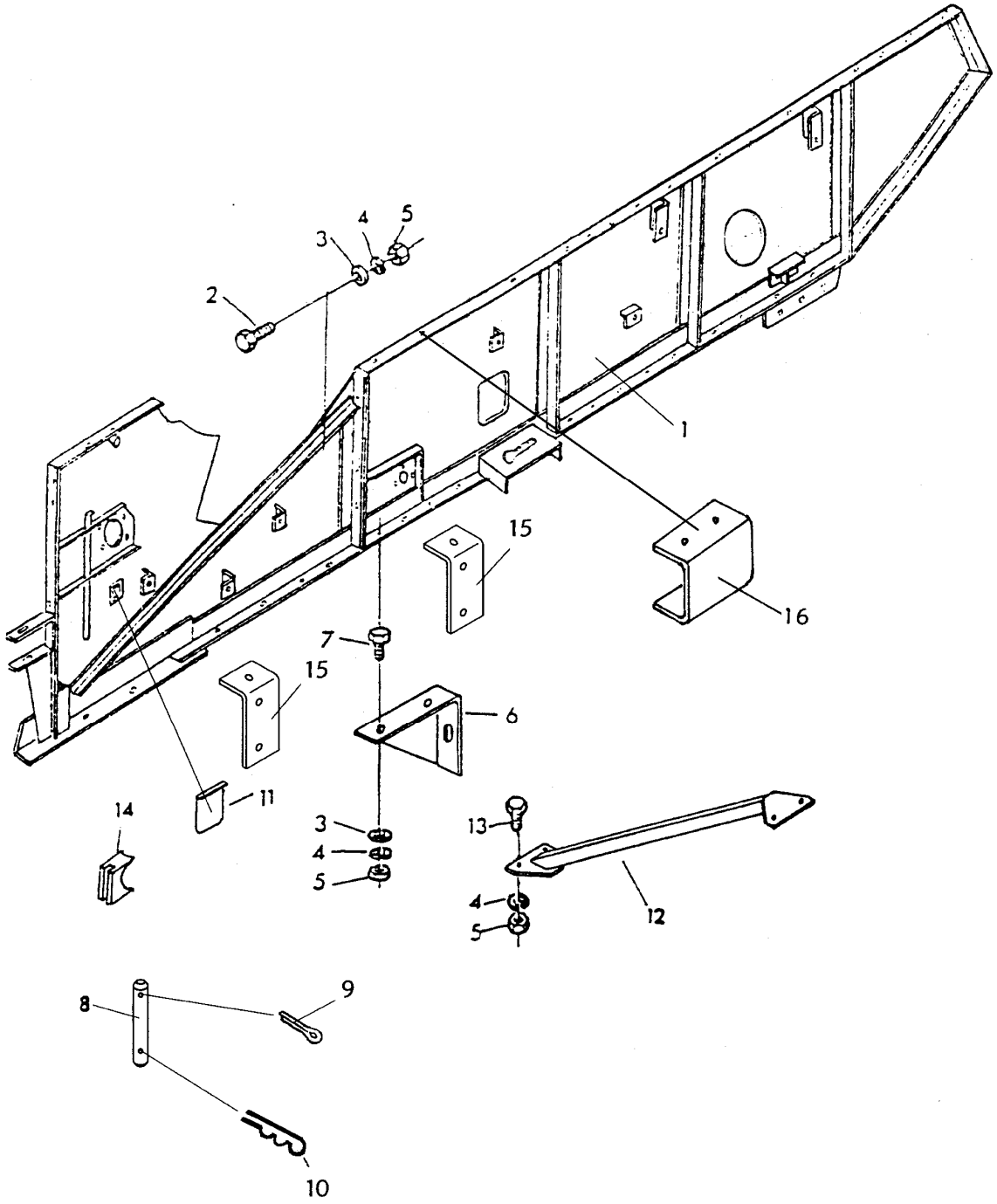

序号 KEY	件　号 PART NO.	名　称	DESCRIPTION	数量 QTY	SERIAL NO.	MODELS 30707	备　注 REMARKS
1	AYC10383	左侧壁	SIDE WALL	1		×	
2	19G02340	螺栓	CAP SCREW	4		×	M10X40 GB5782-86 8.8 Zn
3	24G00010	垫圈	WASHER	6		×	10 GB97.1-85 Zn.D
4	12G45010	弹簧垫圈	LOCK WASHER	10		×	10 GB93-87 Zn.D
5	14G00102	螺母	NUT	10		×	M10 GB6170-86 8 Zn.D
6	YC11219	左固定板	HOLDER	1		×	
7	19G08530	螺栓	CAP SCREW	2		×	M10X30 GB5783-86 8.8Zn
8	YC10751	插销	PIN	1		×	
9	19G02330	销	PIN	1		×	
10	Z32401	弹簧销	PIN	1		×	
11	YC11760	窥视活门	COVER	1		×	
12	AYC11539	支架	HOLDER	1		×	
13	19G08525	螺栓	CAP SCREW	4		×	M10X25 GB5782-86 8.8 Zn
14	YC10694	导座	GUIDE	1		×	
15	YC11585	板	PLATE	2		×	
16	YC15579	折板	PLATE	1		×	

FLOOR PANELS ENGINE COMPARTMENT
机架盖板

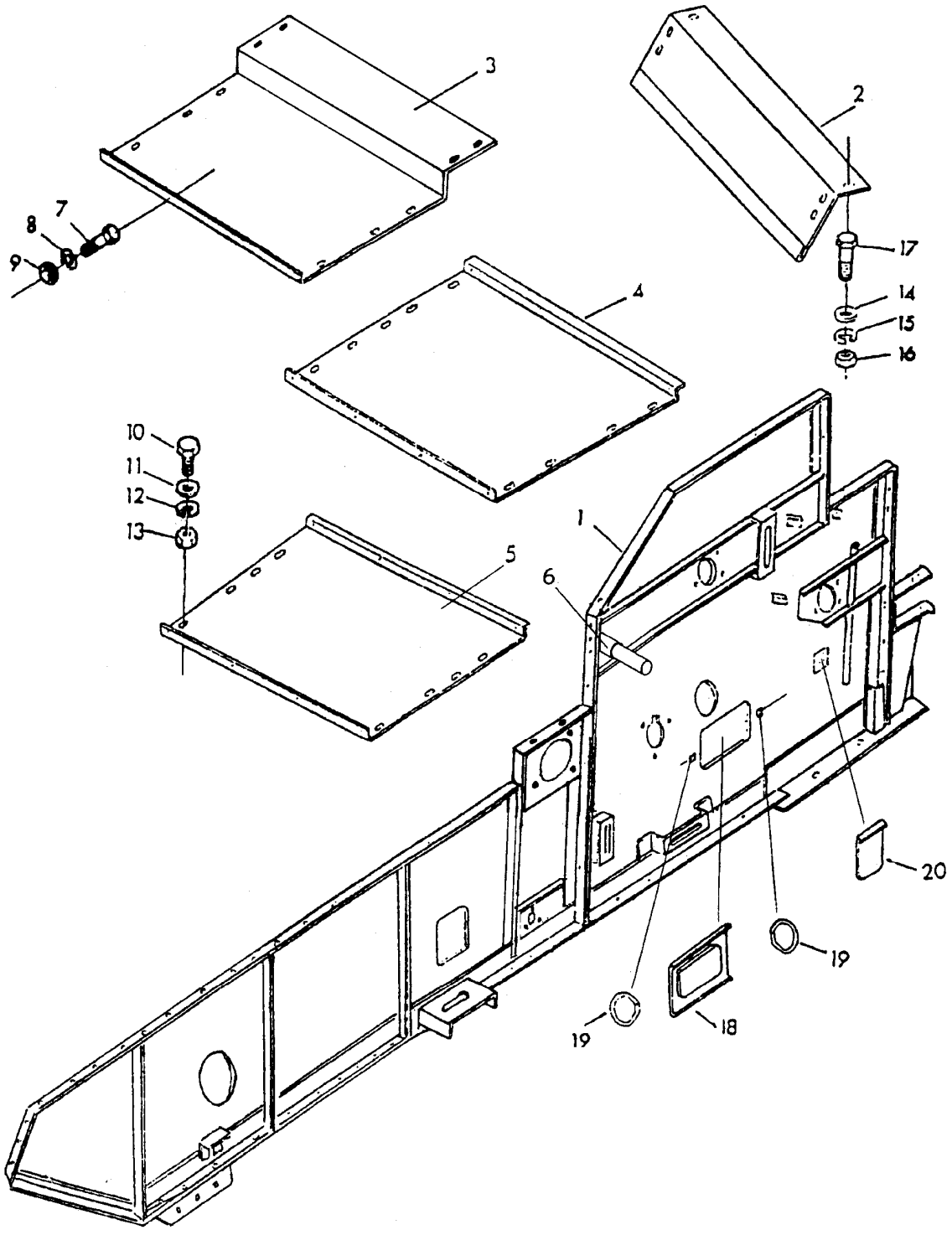

序号 KEY	件　号 PART NO.	名　　称	DESCRIPTION	数量 QTY	SERIAL NO.	MODELS 3 0 7 0	备　　注 REMARKS
1	AYC11537	右侧壁	SIDE WALL	1		×	
2	YC11208	尾罩板	PLATE	1		×	
3	YC15575	前盖板	PLATE	1		×	
4	D31428	中盖板	PLATE	1		×	
5	YC11239	后盖板	PLATE	1		×	
6	YC11547	轴	SHAFT	1		×	
7	19G08316	螺栓	CAP SCREW	2		×	M6X16 GB5783-86 8.8 Zn
8	12G45006	弹簧垫圈	LOCK WASHER	1		×	6 GB93-87 Zn.D
9	14G00062	螺母	NUT	2		×	M6 GB6172-86 05 Zn.D
10	19G08530	螺栓	CAP SCREW	2		×	M10X30 GB5783-86 8.8 Zn
11	24G00010	垫圈	WASHER	6		×	10 GB97.1-85 Zn.D
12	12G7013	弹簧垫圈	LOCK WASHER	1		×	10 GB93-87 Zn.D
13	14G00102	螺母	NUT	2		×	M10 GB6172-86 05 Zn.D
14	24G00008	垫圈	WASHER	6		×	8 GB97.1-85 Zn.D
15	12G45008	弹簧垫圈	LOCK WASHER	1		×	10 GB93-87 Zn.D
16	14G00082	螺母	NUT	2		×	M8 GB6172-86 05 Zn.D
17	19G08425	螺栓	CAP SCREW	2		×	M8X25 GB5783-86 8.8 Zn
18	AYC11530	活门焊合	COVER	1		×	
19	YC11763	活门扭簧	SPRING	2		×	
20	YC11759	窥视活门	COVER	1		×	

GUARD-LEFT HAND
左侧罩板

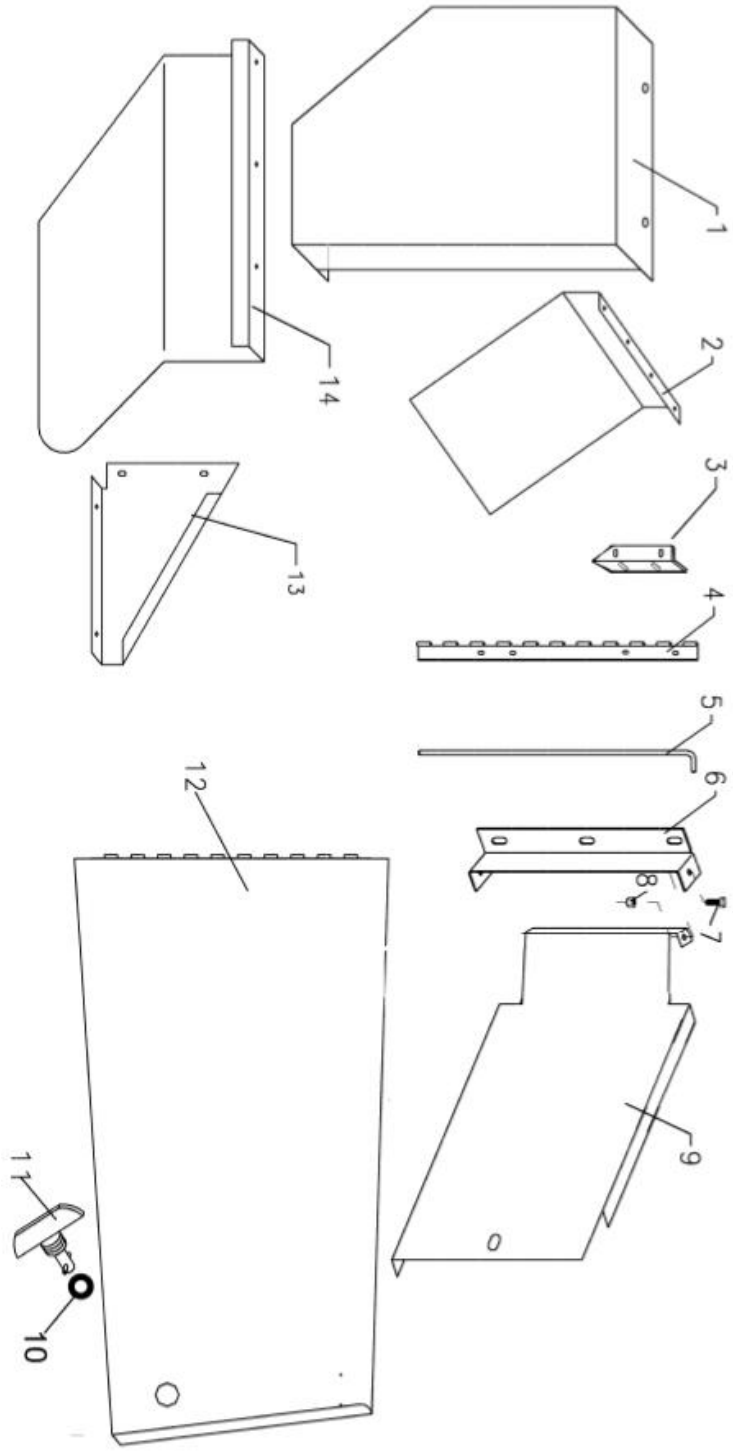

序号 KEY	件　号 PART NO.	名　　称	DESCRIPTION	数量 QTY	SERIAL NO.	MODELS 3 0 7 0	备　　注 REMARKS
1	YC11728	滚筒左侧护罩	GUARD	1		×	
2	D24552	折板	PLATE	1		×	
3	YC14200	大合页支架	BRACE	1		×	
4	YC14195	大合页	BRACKET	1		×	
5	YC14199	合页轴	PIN	1		×	
6	YC14210	折板	BRACKET	1		×	
7	19M7077	螺栓	SCREW	2		×	M6*20 GB5781-2000 4.8 Zn.D
8	14M7350	自锁螺母	LOCK NUT	2		×	M6 GB889-86 8 Zn.D
9	YC15877	左后护板	GUARD	1		×	
10	YC16917	锁环	WASHER	1		×	
11	AYC12394	开闭器装配	LATCH	1		×	
12	AYC11384	左罩板焊合	GUARD	1		×	
13	YC11725	三角挡板	PLATE	1		×	
14	YC11726	挡草板	GUARD	1		×	

GUARD-RIGHT HAND
右侧罩板

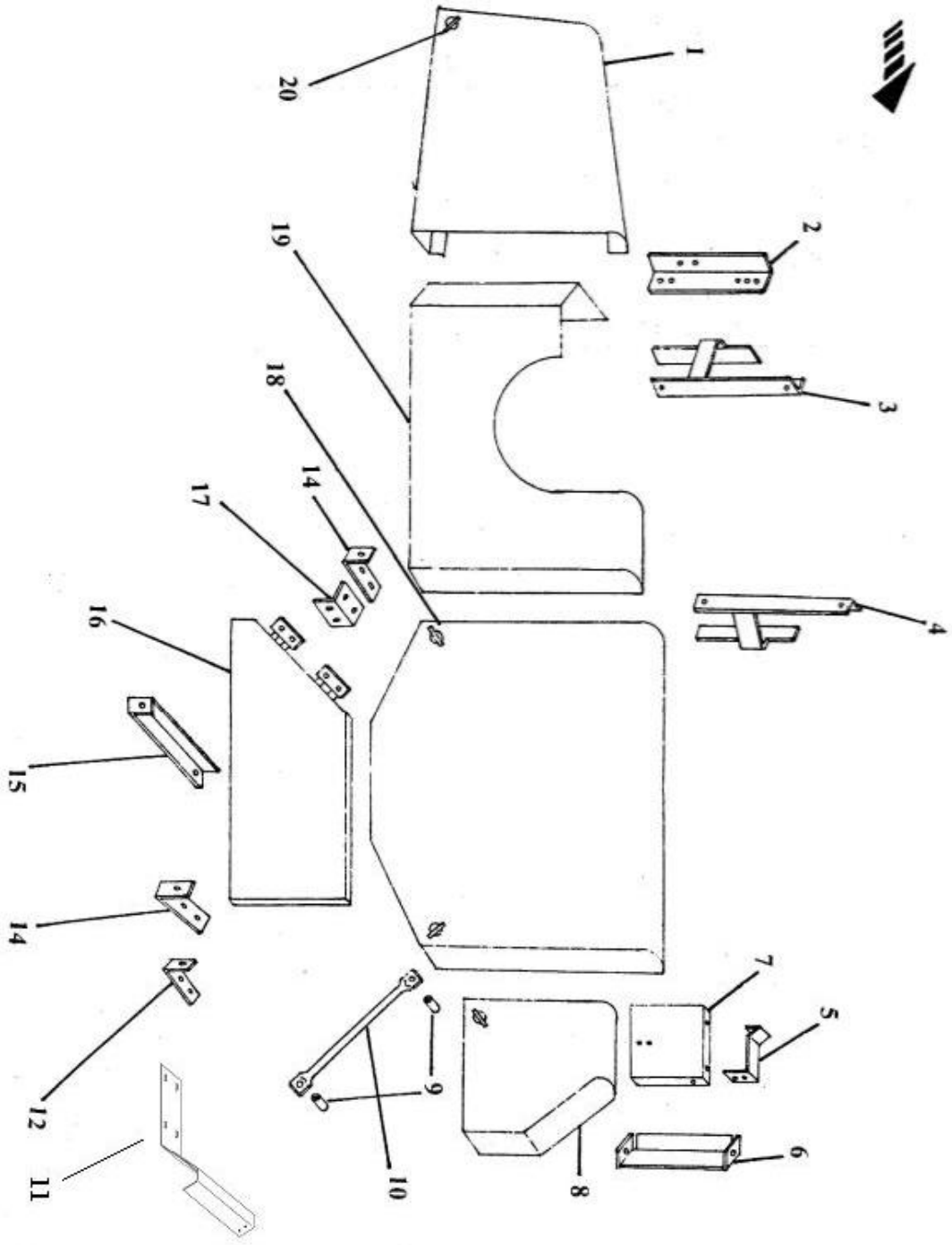

序号	件　号			数量		MODELS	备　　注
						3	
						0	
						7	
KEY	PART NO.	名　　称	DESCRIPTION	QTY	SERIAL NO.	0	REMARKS
1	AYC11380	右后罩	GUARD	1		×	
2	YC14186	右后罩支架	ANGLE	1		×	
3	AYC11414	左支架	BRACE	1		×	无锡发动机专用
	AS45095	左支架	BRACE	1		×	玉柴发动机专用
	AYC11395	左支架	BRACE	1		×	洛拖发动机专用
4	AYC11415	右支架	BRACE	1		×	无锡发动机专用
	AS45096	右支架	BRACE	1		×	玉柴发动机专用
	AYC11394	右支架	BRACE	1		×	洛拖发动机专用
5	YC14451	折板	HOLDER	1		×	
6	YC14234	连接折板	BRACE	1		×	
7	YC14235	折板	HOLDER	1		×	
8	AYC11479	前侧罩板	GUARD	1		×	
9	Z32264	套管	SPACER	2		×	
10	YC14180	右侧罩支架	ROD	1		×	
11	AYC12009	支架	BRACE	1		×	
12	AYC11387	锁架	HOLDER	1		×	
14	AYC11388	左锁架	HOLDER	2		×	
15	YC11727	折板	BRACE	1		×	
16	AYC12014	右下护罩	GUARD	1		×	
17	YC14206	连接板	ANGLE	1		×	
18	AYC12015	右侧罩	GUARD	1		×	
19	AS39226	旋转罩护罩	GUARD	1		×	无锡发动机专用
	AS45093	旋转罩护罩	GUARD	1		×	玉柴发动机专用
	AYC11506	旋转罩护罩	GUARD	1		×	洛拖发动机专用
20	AYC12394	开闭器装配	LATCH	1		×	
	YC16917	锁环	WASHER	1		×	

REAR GUARD
后尾罩

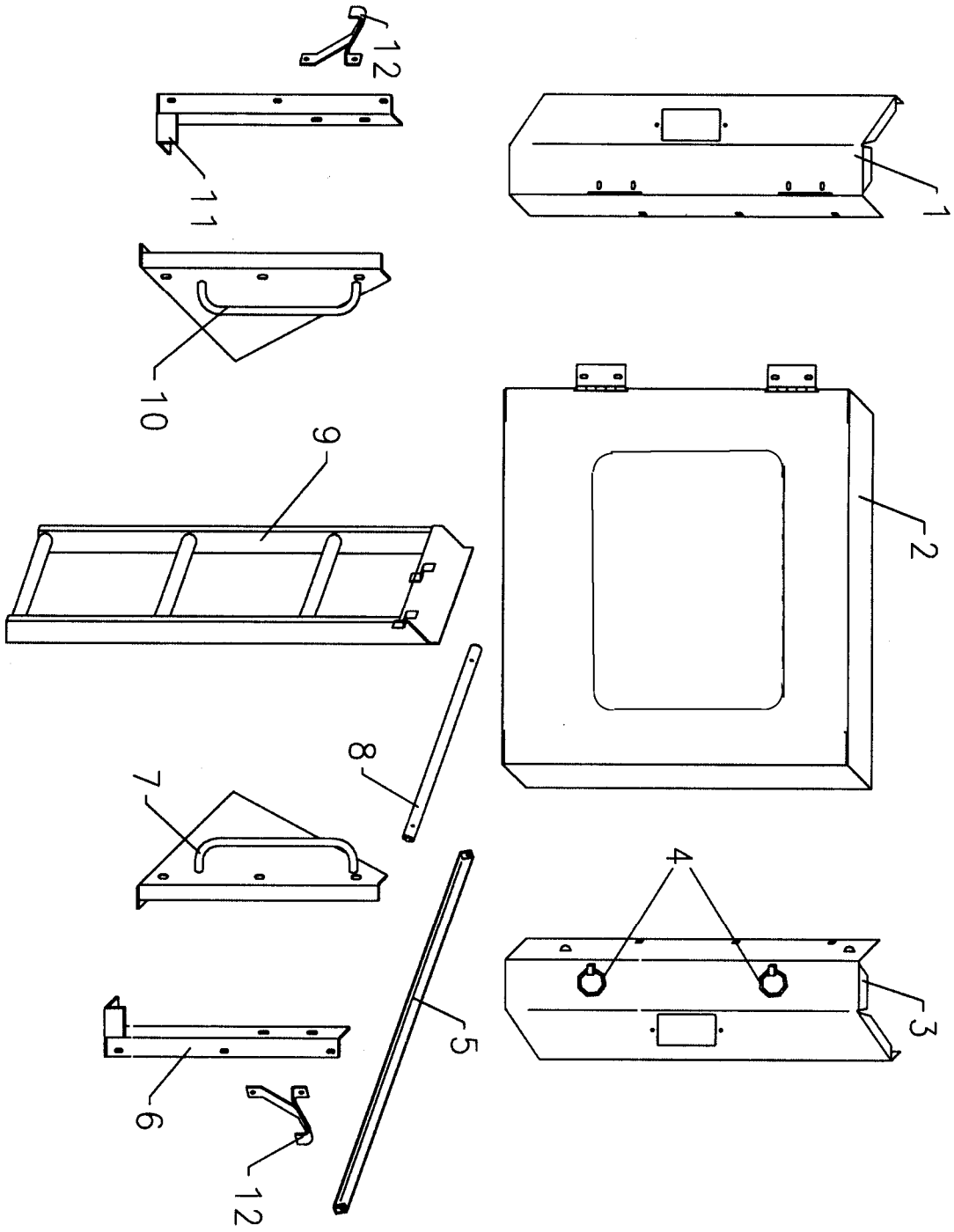

序号 KEY	件　号 PART NO.	名　称	DESCRIPTION	数量 QTY	SERIAL NO.	MODELS 3 0 7 0	备　注 REMARKS
1	YC14191	护罩	GUARD	1		×	
2	AYC12194	门	DOOR	1		×	
3	AYC11857	护罩	GUARD	1		×	
4	YC11763	扭簧	SPRING	2		×	
5	AYC11393	支架	BRACE	1		×	
6	AYC11381	支架	BRACKET	1		×	
7	AYC11859	支架	BRACKET	1		×	
8	YC14219	销轴	SHAFT	1		×	
9	AYC11392	梯子	LADDER	1		×	
10	AYC11382	支架	BRACKET	1		×	
11	AYC11383	支架	BRACKET	1		×	
12	AYC11385	支架	HOLDER	2		×	

BRACKET
支架

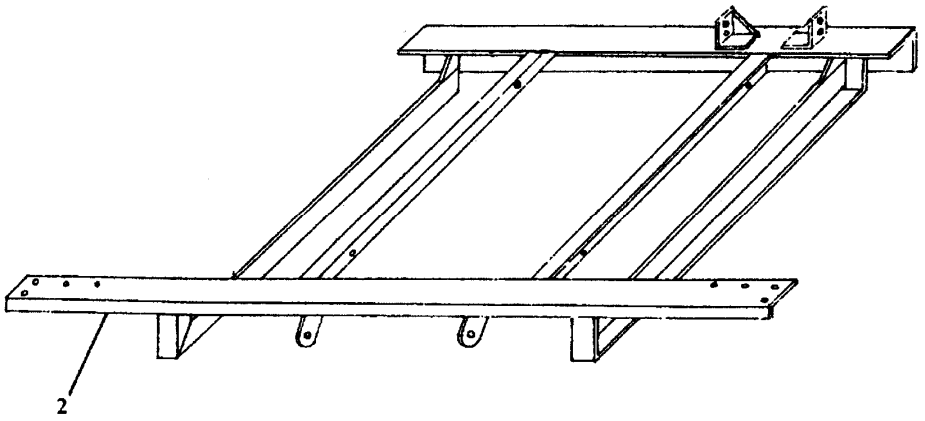

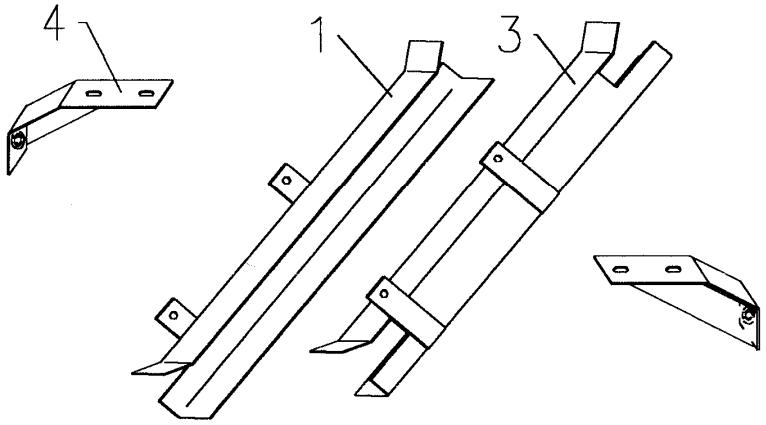

序号 KEY	件　号 PART NO.	名　称	DESCRIPTION	数量 QTY	SERIAL NO.	MODELS 3 0 7 0	备　注 REMARKS
1	AYC11874	左支架	LEFT HOLDER	1		×	
2	AYC11386	支架	BRACKET	1		×	
3	AYC11875	右支架	RIGHT HOLDER	1		×	
4	AYC11389	支架	BRACE	2		×	

DECAL
标记

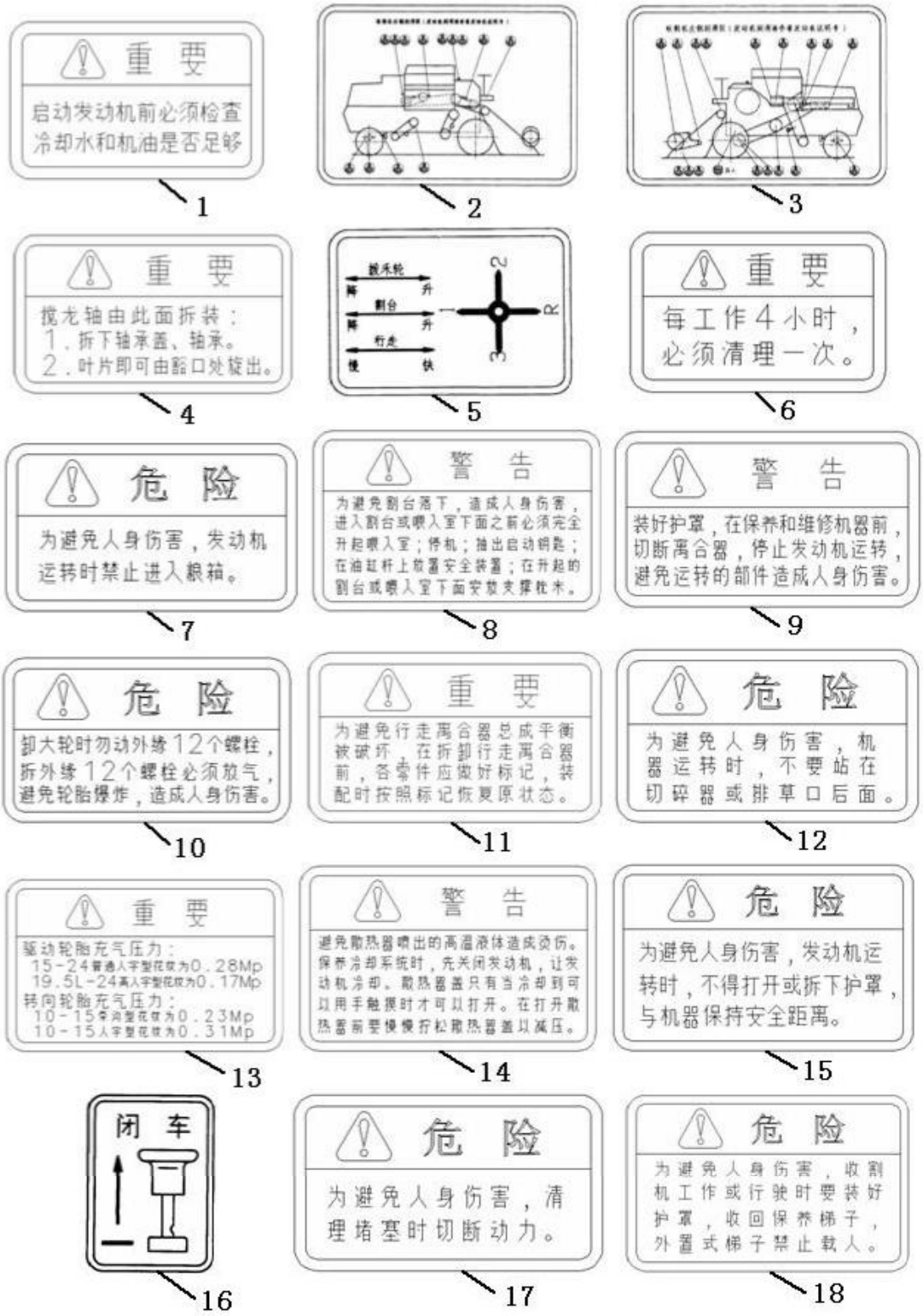
重 要
启动发动机前必须检查冷却水和机油是否足够
1
2
3
重 要
搅龙轴由此面拆装：
1．拆下轴承盖、轴承。
2．叶片即可由豁口处旋出。
4
拨禾轮
降 升
割台
降 升
行走
慢 快
2
1
R
3
5
重 要
每工作4小时，必须清理一次。
6
危 险
为避免人身伤害，发动机运转时禁止进入粮箱。
7
警 告
为避免割台落下，造成人身伤害，进入割台或喂入室下面之前必须完全升起喂入室；停机；拔出启动钥匙；在油缸杆上放置安全装置；在升起的割台或喂入室下面安放支撑枕木。
8
警 告
装好护罩，在保养和维修机器前，切断离合器，停止发动机运转，避免运转的部件造成人身伤害。
9
危 险
卸大轮时勿动外缘12个螺栓，拆外缘12个螺栓必须放气，避免轮胎爆炸，造成人身伤害。
10
重 要
为避免行走离合器总成平衡被破坏，在拆卸行走离合器前，各零件应做好标记，装配时按照标记恢复原状态。
11
危 险
为避免人身伤害，机器运转时，不要站在切碎器或排草口后面。
12
重 要
驱动轮胎充气压力：
15-24普通人字型花纹为0.28Mp
19.5L-24高人字型花纹为0.17Mp
转向轮胎充气压力：
10-15导向型花纹为0.23Mp
10-15人字型花纹为0.31Mp
13
警 告
避免散热器喷出的高温液体造成烫伤。保养冷却系统时，先关闭发动机，让发动机冷却。散热器盖只有当冷却到可以用手触摸时才可以打开。在打开散热器前要慢慢拧松散热器盖以减压。
14
危 险
为避免人身伤害，发动机运转时，不得打开或拆下护罩，与机器保持安全距离。
15
闭 车
16
危 险
为避免人身伤害，清理堵塞时切断动力。
17
危 险
为避免人身伤害，收割机工作或行驶时要装好护罩，收回保养梯子，外置式梯子禁止载人。
18

序号 KEY	件　号 PART NO.	名　称 DESCRIPTION	数量 QTY	SERIAL NO.	MODELS 3070	备　注 REMARKS
1	YC11692	标记 DECAL	1		×	
2	YC11694	标记 DECAL	1		×	
3	YC11695	标记 DECAL	1		×	
4	YC11696	标记 DECAL	2		×	
5	YC11697	标记 DECAL	1		×	
6	YC11698	标记 DECAL	1		×	
7	YC11699	标记 DECAL	1		×	
8	YC11700	标记 DECAL	1		×	
9	YC11701	标记 DECAL	4		×	
10	YC11702	标记 DECAL	2		×	
11	YC11703	标记 DECAL	1		×	
12	YC11704	标记 DECAL	1		×	
13	YC11705	标记 DECAL	1		×	
14	YC12978	标记 DECAL	1		×	
15	YC14357	标记 DECAL	2		×	
16	YC15954	标记 DECAL	1		×	
17	YC16040	标记 DECAL	2		×	
18	YC10724	标记 DECAL	1		×	

DECAL
标记

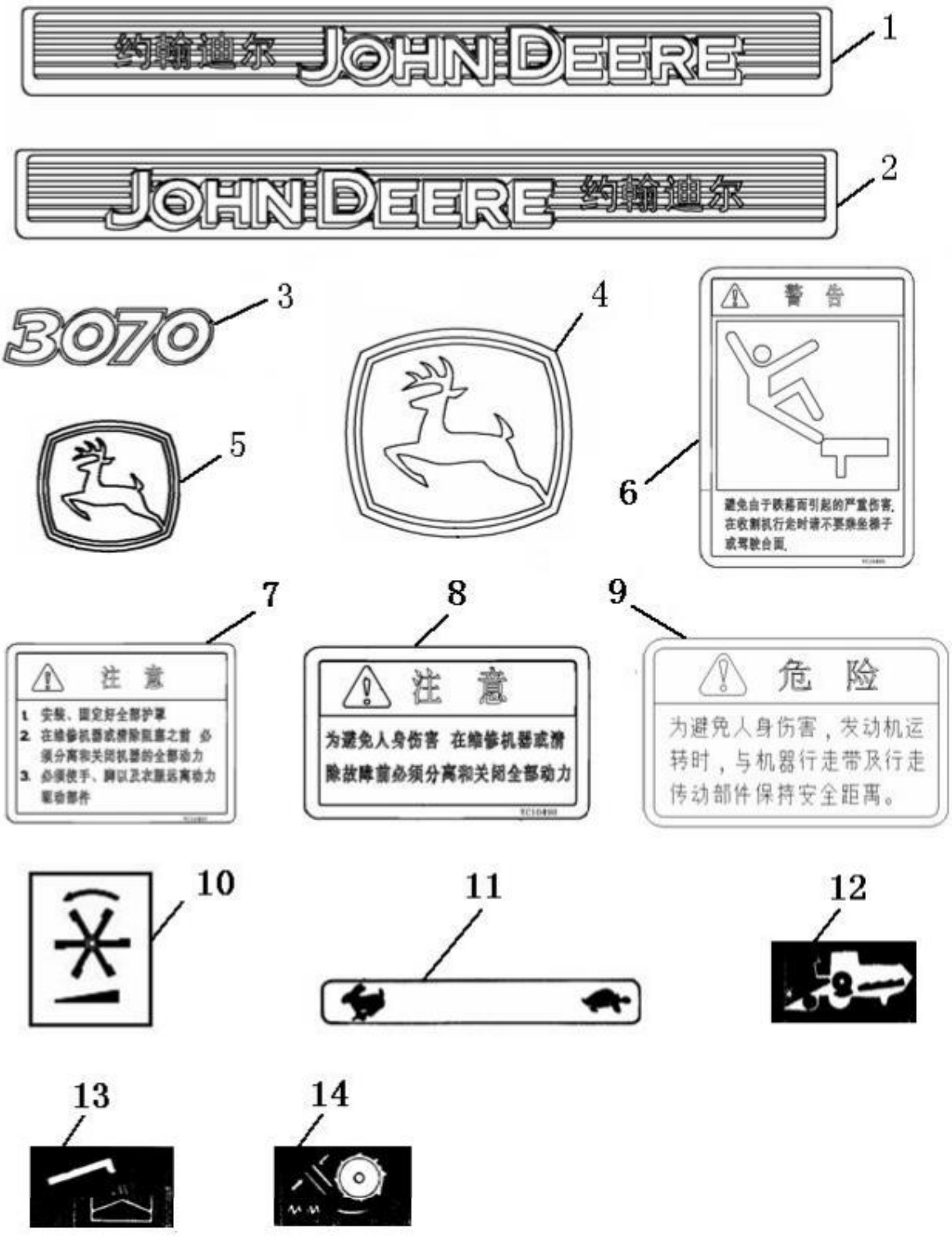
约翰迪尔 JOHN DEERE
1
JOHN DEERE 约翰迪尔
2
3070
3
4
5
警 告
6
避免由于跌落而引起的严重伤害，在收割机行走时请不要乘坐梯子或驾驶台面。
7
注 意
1. 安装、固定好全部护罩
2. 在维修机器或排除阻塞之前 必须分离和关闭机器的全部动力
3. 必须使手、脚以及衣服远离动力驱动部件
8
注 意
为避免人身伤害 在维修机器或排除故障前必须分离和关闭全部动力
9
危 险
为避免人身伤害，发动机运转时，与机器行走带及行走传动部件保持安全距离。
10
11
12
13
14

序号 KEY	件　号 PART NO.	名　　称	DESCRIPTION	数量 QTY	SERIAL NO.	MODELS 3070	备　　注 REMARKS
1	YC10189	右侧标记	DECAL	1		×	
2	YC10190	左侧标记	DECAL	1		×	
3	YC10218	3070 标记	DECAL	2		×	
4	YC10193	奔鹿标记	DECAL	1		×	
5	YC10205	奔鹿标记	DECAL	1		×	
6	YC10495	标记	DECAL	1		×	
7	YC10497	标记	DECAL	1		×	
8	YC10498	标记	DECAL	1		×	
9	YC10724	标记	DECAL	1		×	
10	YC10695	标记	DECAL	1		×	
11	Z41136	标记	DECAL	1		×	
12	YC17462	标记	DECAL	1		×	
13	Z41210	标记	DECAL	1		×	
14	Z41211	标记	DECAL	1		×	

CAB
驾驶室

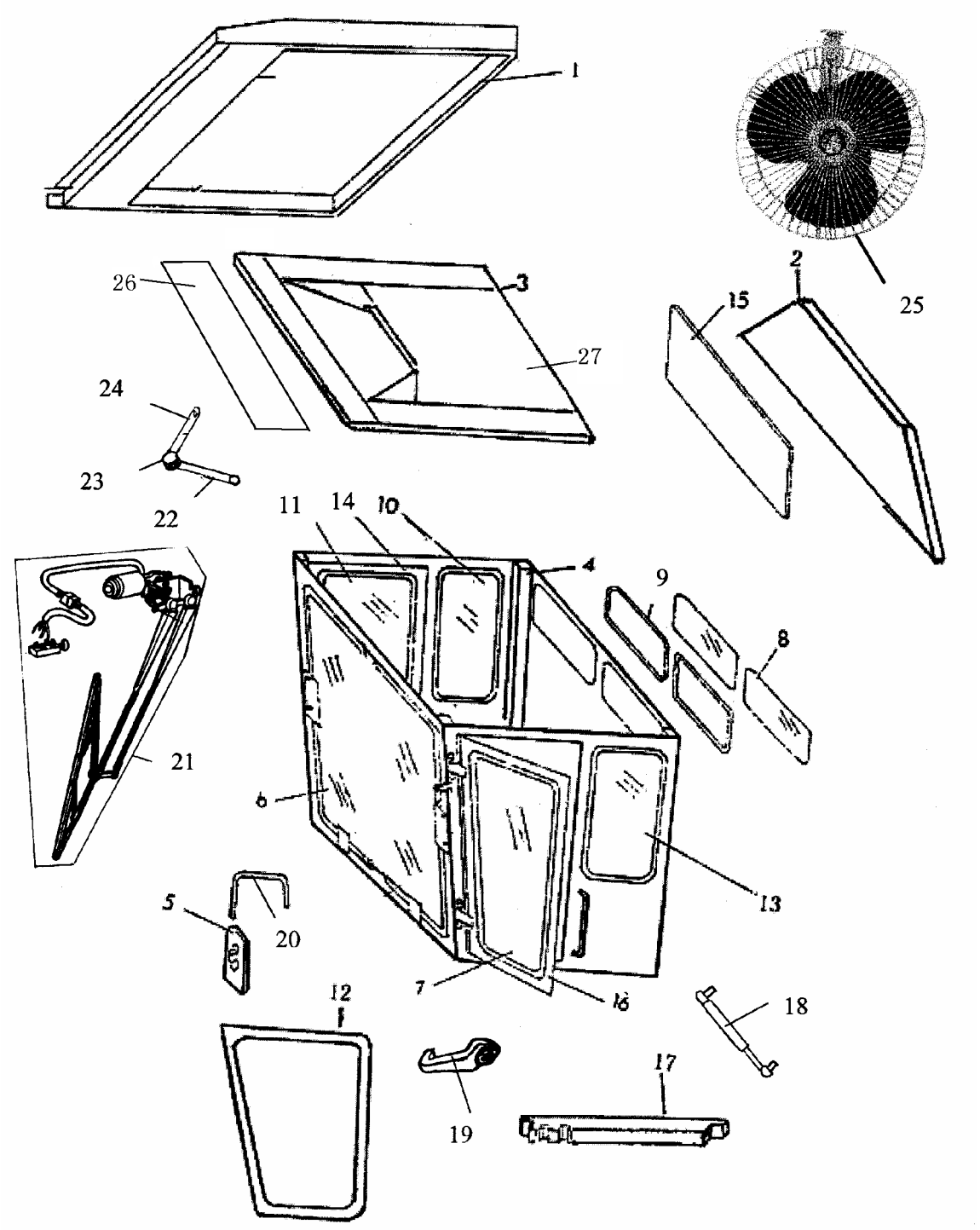

序号 件 号				数量		MODELS 备 注	
						3	
						0	
						7	
KEY	PART NO.	名 称	DESCRIPTION	QTY	SERIAL NO.	0	REMARKS
1	AYC12184	上盖焊合	COVER	1		×	
2	YC16014	隔音板	INSULATOR	1		×	
3	AYC12064	上顶衬	HEADLINER	1		×	
4	AYC12130	下框焊合	FRAME	1		×	
5	AS20419	倒车镜	REAR VIEW MIRROR	2		×	
6	YC16003	前玻璃	WINDOW	1		×	
7	YC16001	门玻璃	WINDOW	1		×	
8	YC14109	后玻璃	WINDOW	2		×	
9	AYC10509	玻璃嵌条	FRAME	2		×	
10	YC16004	右窗玻璃	WINDOW	1		×	
11	YC16003	右前玻璃	WINDOW	1		×	
12	YC12397	密封条	GASKET	1		×	
13	YC16000	左窗玻璃	WINDOW	1		×	
14	AYC12126	右侧壁焊合	SIDE WALL	1		×	R.H 右侧
	AYC12062	左侧壁焊合	SIDE WALL	1		×	L.H 左侧
15	AYC11491	隔音板	INSULATOR	1		×	
	AYC11490	隔音板	INSULATOR	1		×	
	AYC12181	隔音板	INSULATOR	1		×	
	AYC12183	隔音板	INSULATOR	1		×	
	YC16010	隔音板	INSULATOR	1		×	
16	AYC12063	门焊合	DOOR	1		×	
17	YC14121	密封条	GASKET	1		×	
18	AYC10009	气动撑杆	HOOK BOLT	1		×	
19	AYC10507	门锁（NBS502）	LOCK	1		×	
20	AYC10508	左倒车镜支架焊合	HANDRAIL	1		×	L.H 左侧
	AYC11359	右倒车镜支架焊合	HANDRAIL	1		×	R.H 右侧
21	AS42762	刮水器总成（12V）	WEATHERSTRIP	1		×	
22	AYC10709	拉杆焊合	ROD	1		×	
23	AYC10712	手柄	HANDLE	1		×	
24	AYC10710	拉杆焊合	ROD	1		×	
25	AS46256	250 吸顶扇	FAN	1		×	
26	AYC12067	盖板装配	COVER	1		×	
27	AYC12143	顶衬板	HEADLINER	1		×	

SHIFI CONSOLE
仪表盘

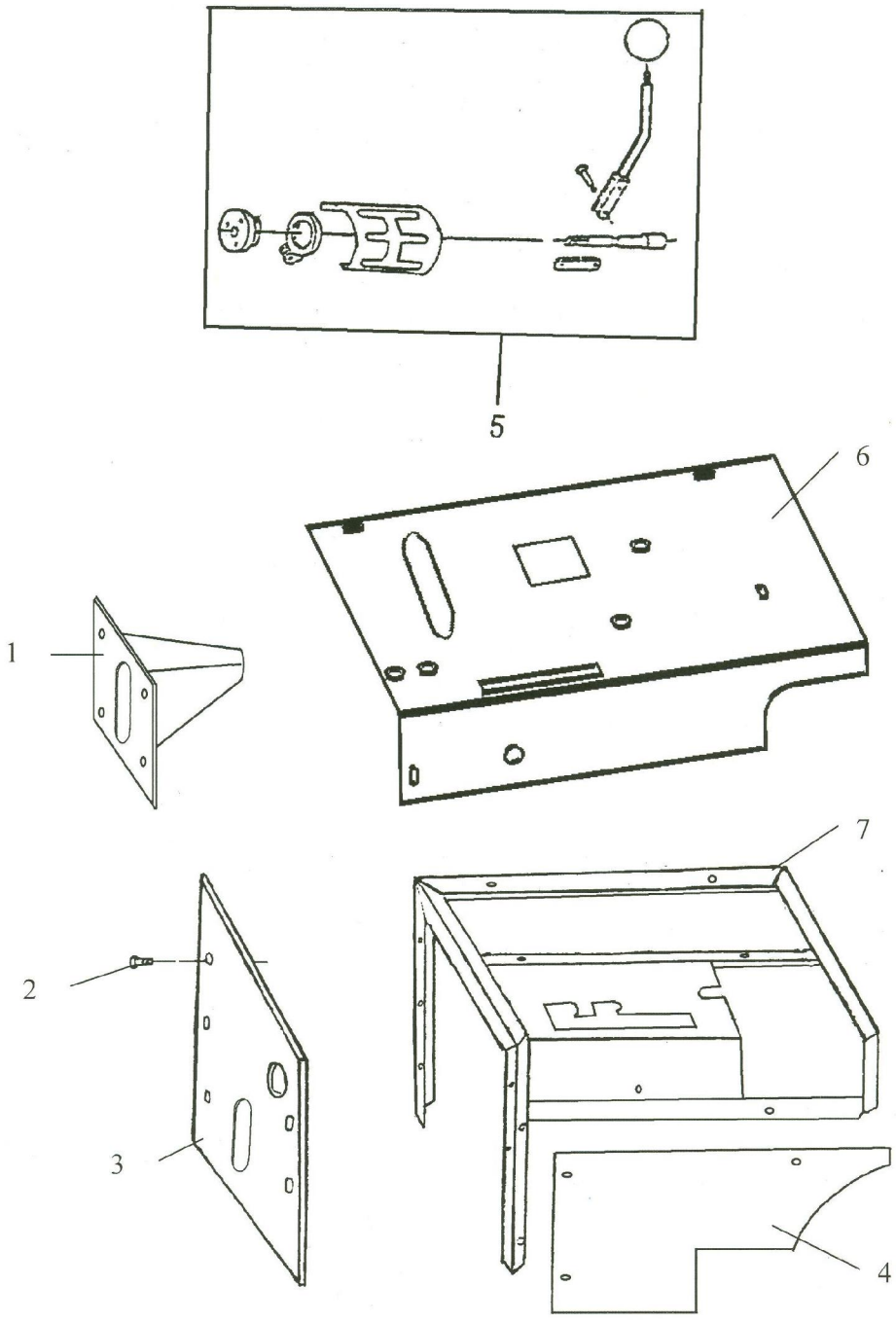

序号	件　　号			数量		MODELS	备　　注
						3	
						0	
						7	
KEY	PART NO.	名　　称	DESCRIPTION	QTY	SERIAL NO.	0	REMARKS
1	AYC11413	手柄罩	BOOT	1		×	
2	19G52116	螺栓	CAP SCREW	18		×	6*16 GB5781-2000 4.8Zn.D
3	YC14257	前护板	SHIELD	1		×	
4	YC14258	左护板	HOLDER	1		×	
5	AYC10466	控制阀	CONTROLLER	1		×	
6	YC15549	仪表盘	INSTRUMENT PANEL	1		×	
7	AYC11400	仪表箱框架	HOLDER	1		×	

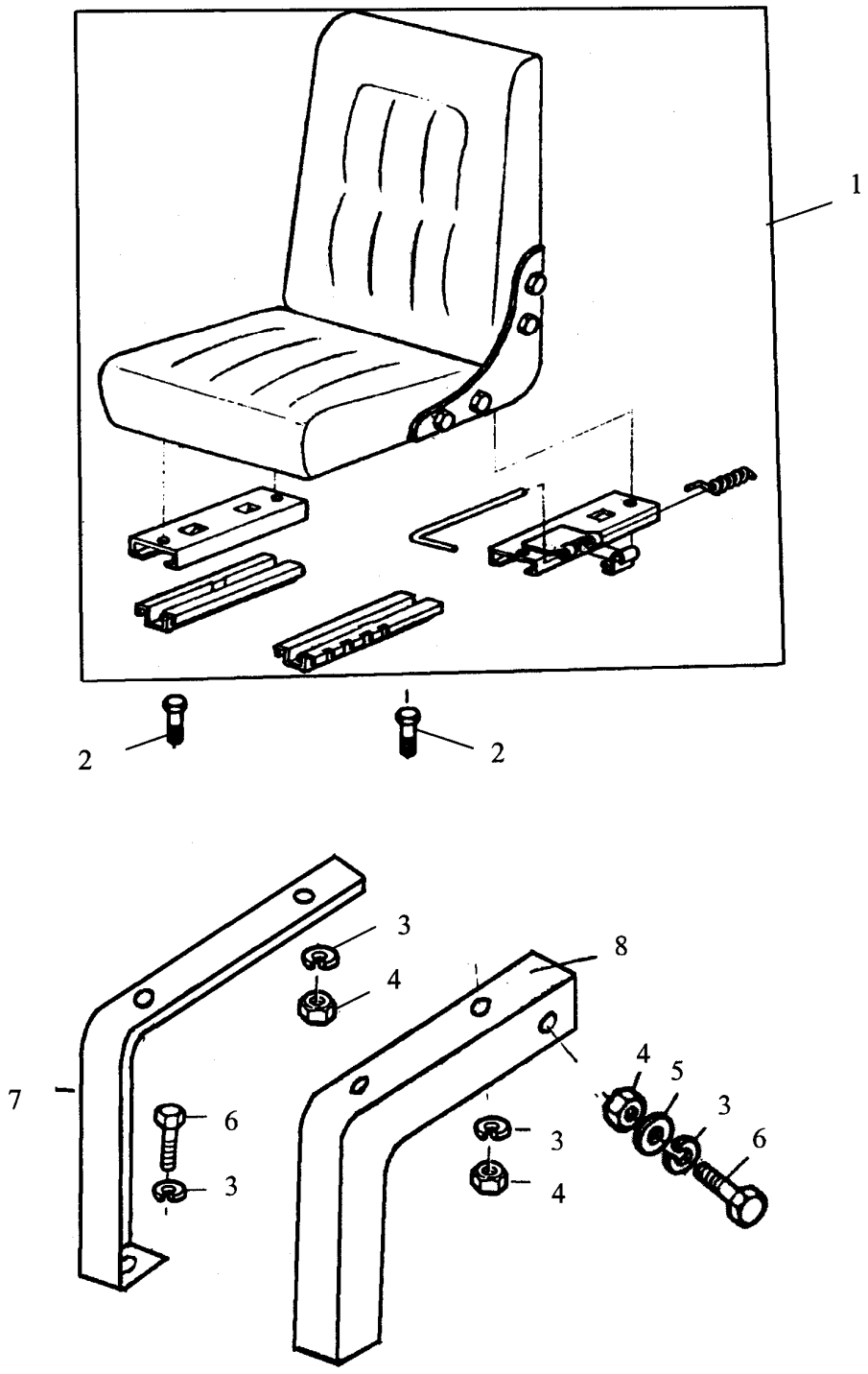
1
2
2
3
4
7
6
3
8
3
4
4
5
3
6

序号	件　号			数量		MODELS	备　　注
						3	
						0	
						7	
KEY	PART NO.	名　　称	DESCRIPTION	QTY	SERIAL NO.	0	REMARKS
1	AS47982	驾驶座	SEAT	1		×	
2	21M6668	螺钉	CAP SCREW	1		×	M8x20 GB67-85 4.8 Zn.D
3	12M7008	垫圈	WASHER	8		×	8 GB93-87 Zn.D
4	14M7029	螺母	NUT	6		×	M8 GB6170-86 8 Zn.D
5	24M7055	垫圈	WASHER	4		×	8 GB97.1-85 Zn.D
6	19M7139	螺栓	CAP SCREW	4		×	M8x20 GB5783-86 8.8 Zn.D
7	YC16089	右梁	CROSSBAR	1		×	
8	YC16088	左梁	CROSSBAR	1		×	

OPERATOR'S PLATFORM
驾驶台

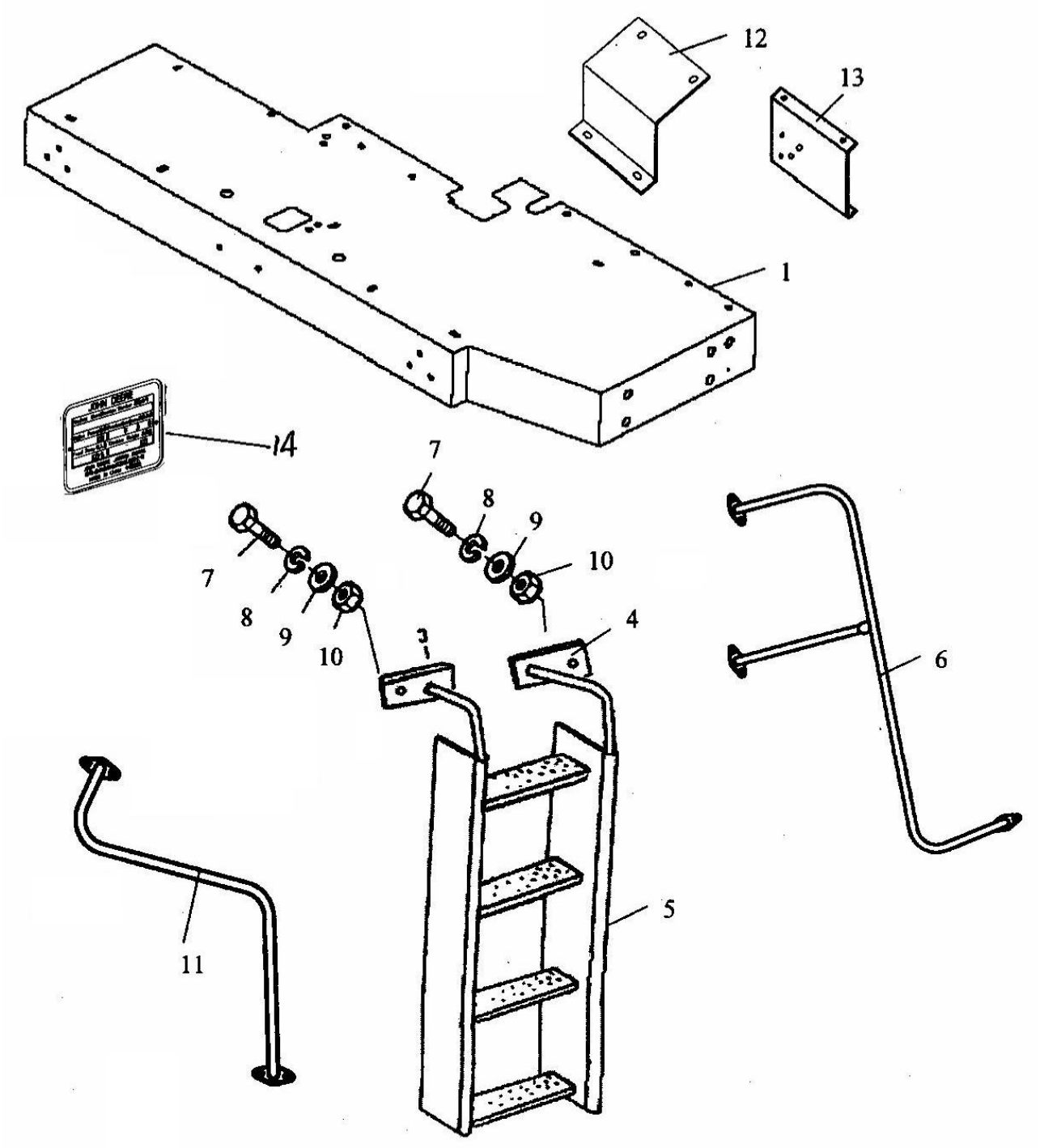

序号	件　号			数量		MODELS	备　　注
						3	
						0	
						7	
KEY	PART NO.	名　　称	DESCRIPTION	QTY	SERIAL NO.	0	REMARKS
1	AYC11397	台面焊合	PLATFORM	1		×	
3	AD36-73	左扶手焊合	HANDRAIL	1		×	
4	AD36-74	右扶手焊合	HANDRAIL	1		×	
5	AYC10430	梯子焊合	LADDER	1		×	
6	AYC11411	护栏焊合	HANDRALL	1		×	
7	19M7169	螺栓	CAP SCREW	4		×	M10x35 GB5783-86 8.8 Zn.D
8	12M7013	垫圈	WASHER	4		×	10 GB93-87 Zn.D
9	24M7028	垫圈	WASHER	8		×	10 GB97.1-85 Zn.D
10	14G14100	螺母	NUT	4		×	M10 GB41-86 5 Zn.D
11	AYC11358	护栏焊合	HANDRALL	1		×	
12	YC14279	护板	SHIELD	1		×	
13	AYC11412	油管固定架	BRACKET	1		×	
14	YC17286	标牌	SERIALNUMBER	1		×	

ASSISTANT OPERATOR'S SEAT
副驾驶座

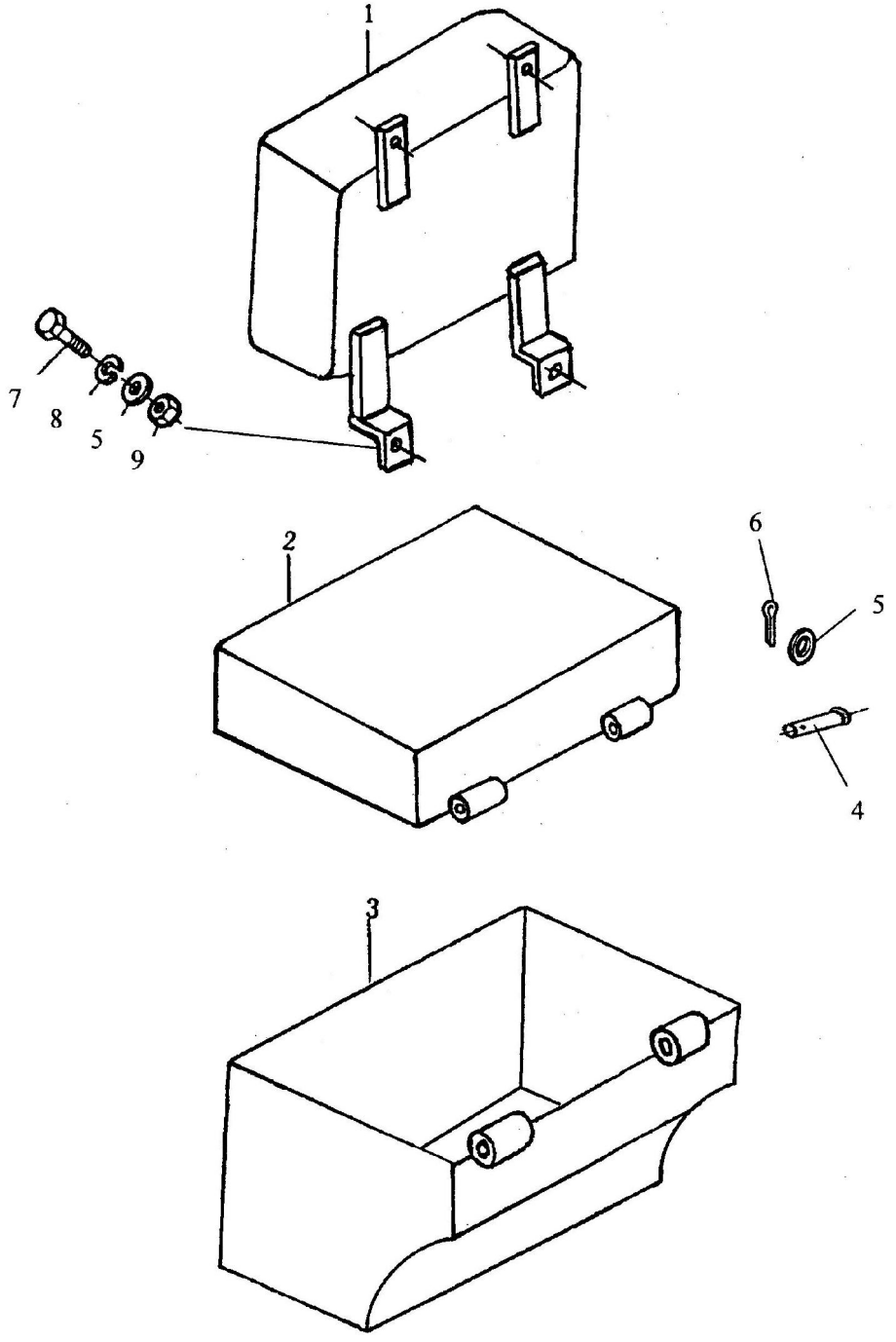

序号 KEY	件　号 PART NO.	名　称	DESCRIPTION	数量 QTY	SERIAL NO.	MODELS 3 0 7 0	备　注 REMARKS
1	YC14114	靠垫	CUSHION FOR LEANINGON	1		×	
2	YC14115	座垫	SEAT	1		×	
3	AYC11357	座箱焊合	SIDE WALL	1		×	
4	45G10849	销轴	PIN	2		×	8X65GB882
5	24G00008	垫圈	WASHER	AR		×	8 GB97.1-85 Zn.D
6	11G01714	开口销	COTTER PIN	2		×	3x14 GB91-86 Zn.D
7	19G08420	螺栓	CAP SCREW	4		×	M8x20 GB5783-86 8.8 Zn.D
8	12G45008	垫圈	WASHER	4		×	8 GB93-87 Zn.D
9	14G00082	螺母	NUT	4		×	M8 GB6170-86 8 Zn.D

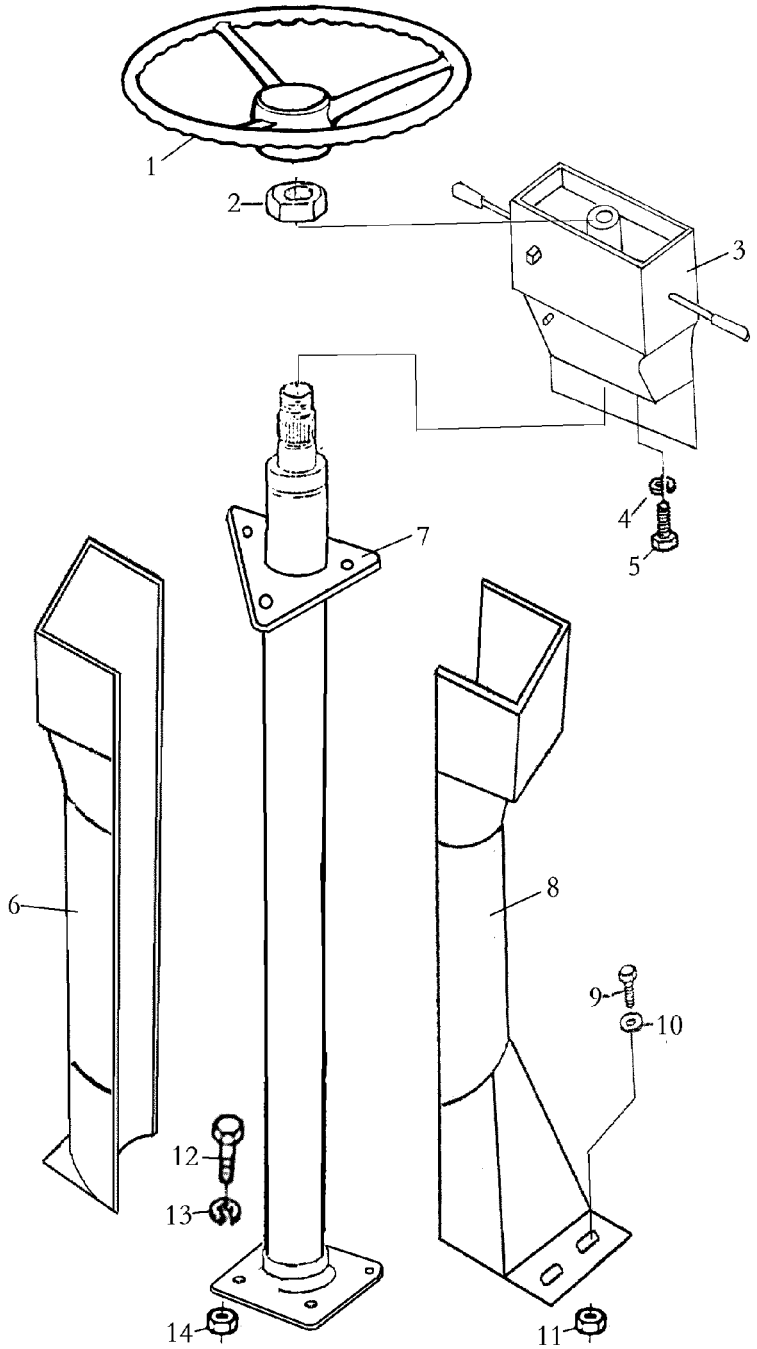
1
2
3
4
5
6
7
8
9
10
11
12
13
14

序号	件　号			数量		MODELS	备　　注
						3	
						0	
						7	
KEY	PART NO.	名　　称	DESCRIPTION	QTY	SERIAL NO.	0	REMARKS
1	AS39812	方向盘(φ380)	STEERINGWHEEL	1		×	
2	14G03169	螺母	NUT	1		×	
3	AS26199	组合开关	SWTTCHS	1		×	
4	12M5737	垫圈	WASHER	3		×	
5	21M5619	螺钉	SCREW	3		×	M6x16 GB67-85 Zn
6	YC14284	舵柱右罩	GUARD	1		×	
7	AYC11399	舵柱焊合	DRAGLINK	1		×	
8	YC14249	舵柱左罩	GUARD	1		×	
9	19M7163	螺栓	SCREW	4		×	M8x25 GB5783-86 8.8 Zn.D
10	24M7055	垫圈	WASHER	8		×	8 GB97.1-85 Zn.D
11	14M7029	螺母	NUT	4		×	M8 GB6170-86 8 Zn.D
12	19M7167	螺栓	SCREW	4		×	M10x25 GB5783-86 8.8 Zn.D
13	12M7013	垫圈	WASHER	4		×	10 GB93-87 Zn.D
14	14M7140	螺母	NUT	4		×	M10 GB6170-86 8 Zn.D

LEFT HAND SHIFT LEVERS
左侧操纵杆

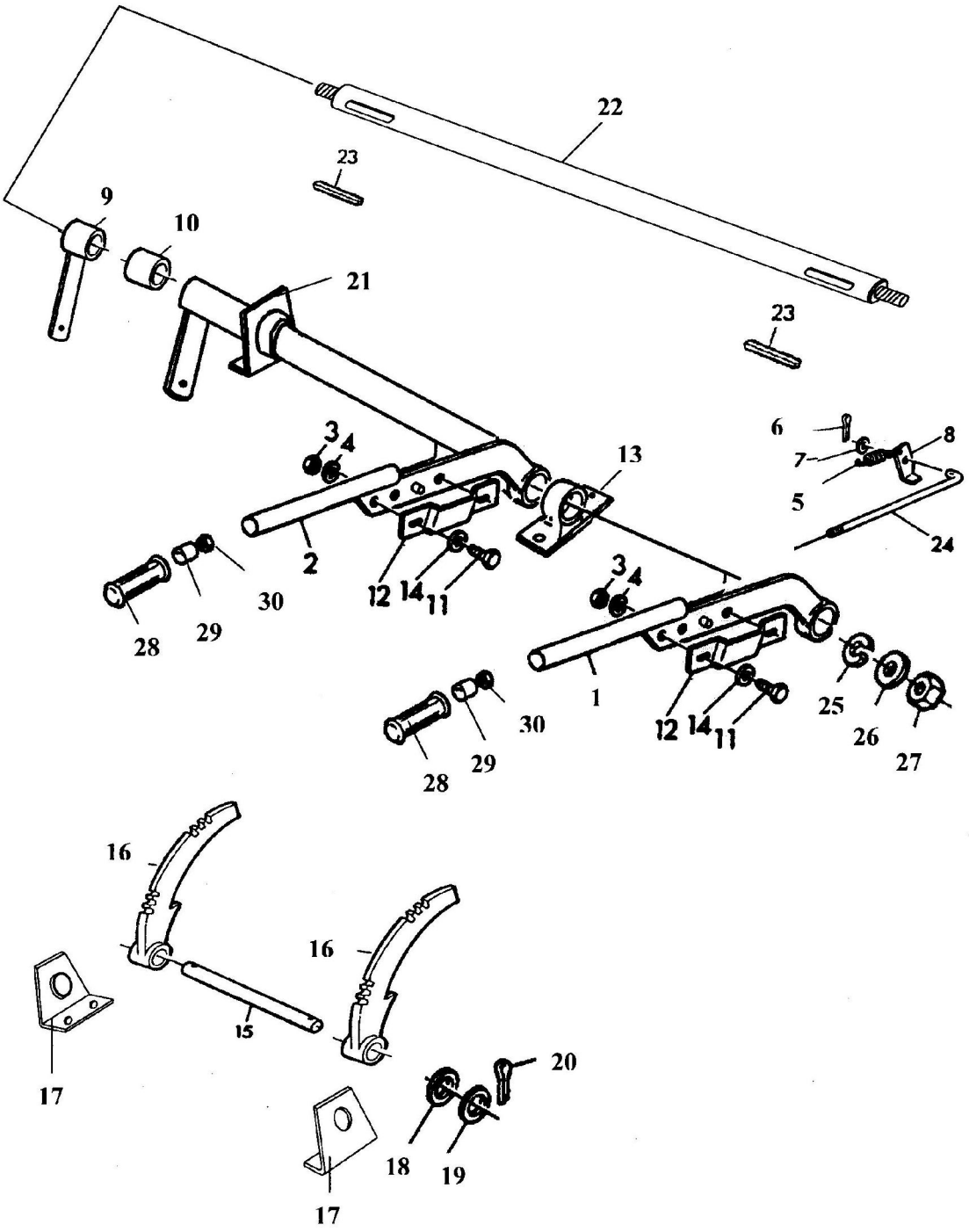

序号 KEY	件　号 PART NO.	名　　称	DESCRIPTION	数量 QTY	SERIAL NO.	MODELS 3 0 7 0	备　　注 REMARKS
1	AYC10422	脱谷离合器操纵杆	LEVER	1		×	
2	AYC11408	卸粮离合器操纵杆	LEVER	1		×	
3	14M7291	螺母	NUT	8		×	M8 GB6170-86 8 Zn.D
4	12M7008	弹垫	LOCK WASHER	8		×	8 GB93-87 Zn.D
5	Z21613	弹簧	RETURN SPRING	2		×	
6	11G01726	开口销	COTTER PIN	2		×	3x26 GB91-86 Zn.D
7	24M7054	垫圈	WASHER	2		×	6 GB97.1-85 Zn.D
8	Z21834	锁钩	LATCH	2		×	
9	AYC10419	曲柄焊合	ECCENTRIC	1		×	
10	YC11420	间管	SPACER	1		×	
11	19M7284	螺栓	CAP SCREW	4		×	M8x18 GB5783-86 8.8 Zn.D
12	Z36022	操纵杆扇形板支架	BRACKET	2		×	
13	YC11369	支座	SUPPORT	1		×	
14	12M7008	弹垫	LOCK WASHER	8		×	8 GB93-87 Zn.D
15	YC11405	轴	SHAFT	1		×	
16	YC11370	扇形导板	QUADRANT	2		×	
17	YC11376	轴座	BEACKET	2		×	
18	Z27188	垫圈	WASHER	2		×	
19	24G20020	垫圈	WASHER	2		×	20 GB848-85 Zn.D
20	11G02040	开口销	COTTER PIN	2		×	4x40 GB91-86 Zn.D
21	AYC10426	支座焊合	BEARING	1		×	
22	YC14276	脱谷卸粮轴	SHAFT	1		×	
23	49G00530	键	SHAFT KEY	2		×	8x30 GB1096-79
24	YC16618	压杆	HOOK BOLT	2		×	
25	12M7013	垫圈	WASHER	2		×	10 GB93-87 Zn.D
26	E12817	垫圈	WASHER	2		×	
27	14M7140	螺母	NUT	2		×	M10 GB6170-86 8 Zn.D
28	YC16620	手柄套通孔	GRIP	1		×	
29	Z21823	按钮	KNOB	1		×	
30	14G14060	螺母	NUT	3		×	M6 GB41-86 5 Zn.D

CLUTCH AND BRAKE LEVER
离合器与刹车操纵杆

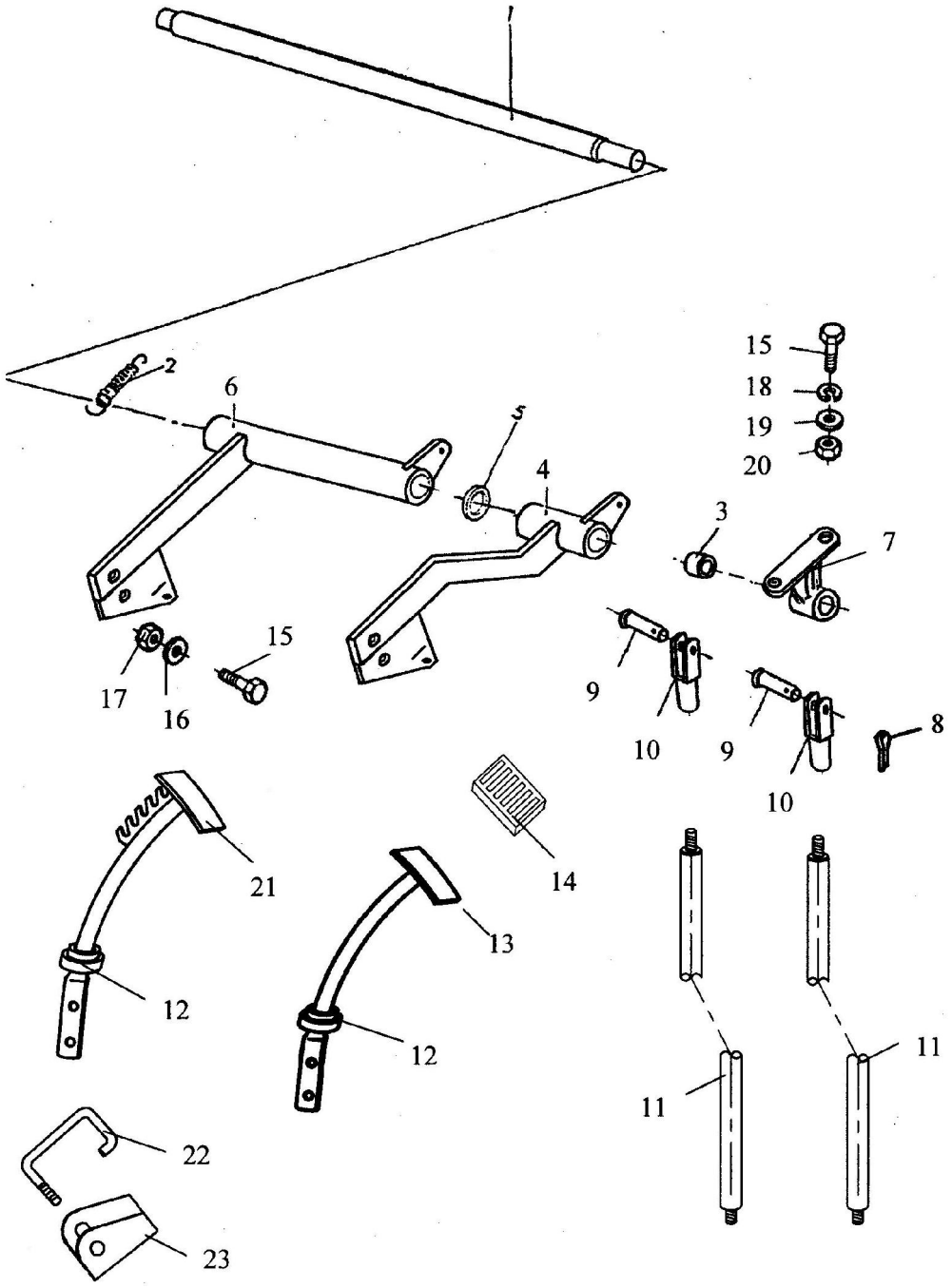

序号	件　号			数量		MODELS	备　　注
						3	
						0	
						7	
KEY	PART NO.	名　　称	DESCRIPTION	QTY	SERIALNO.	0	REMARKS
1	YC14267	轴	SHAFT	1		×	
2	YC11773	踏板拉簧	SPRING	1		×	
3	YC11819	轴承衬套	BUSHING	2		×	
4	AYC11402	离合器管轴焊合	CLUTCHSHAFT	1		×	
5	L19162	垫圈	WASHER	4		×	
6	AYC11403	刹车管轴焊合	BRAKE SHAFT	1		×	
7	YC11373	支座	SUPPORT	1		×	
8	11G01626	销	COTTER	4		×	2.5x26 GB91-86 Zn.D
9	YC11774	销轴	PIN	4		×	
10	YC11770	连接叉	YOKE	4		×	
11	AYC11404	拉杆焊合	ROD	2		×	
12	YC14268	减震防尘垫	MAT	2		×	
13	AYC11888	离合踏板焊合	FOOT PEDALS	1		×	
14	YC14269	踏板护罩	BOOT	2		×	
15	19M7288	螺栓	CAP SCREW	6		×	M8x30 GB5783-86 8.8 Zn.D
16	24M7055	垫圈	WASHER	4		×	8 GB97.1-85 Zn.D
17	14M7307	螺母	NUT	4		×	M8 GB889-86 8 Zn.D
18	12M7008	垫圈	WASHER	2		×	8 GB93-87 Zn.D
19	24M7207	垫圈	WASHER	2		×	8 GB96-85 Zn.D
20	14M7029	螺母	NUT	2		×	M8 GB6170-86 8 Zn.D
21	AYC10681	刹车踏板焊合	FOOT PEDALS	1		×	
22	YC12447	锁钩	PIN	1		×	
23	YC12448	底座	BRACKET	1		×	

CLUTCH AND BRAKE LEVER
离合器与刹车操纵杆

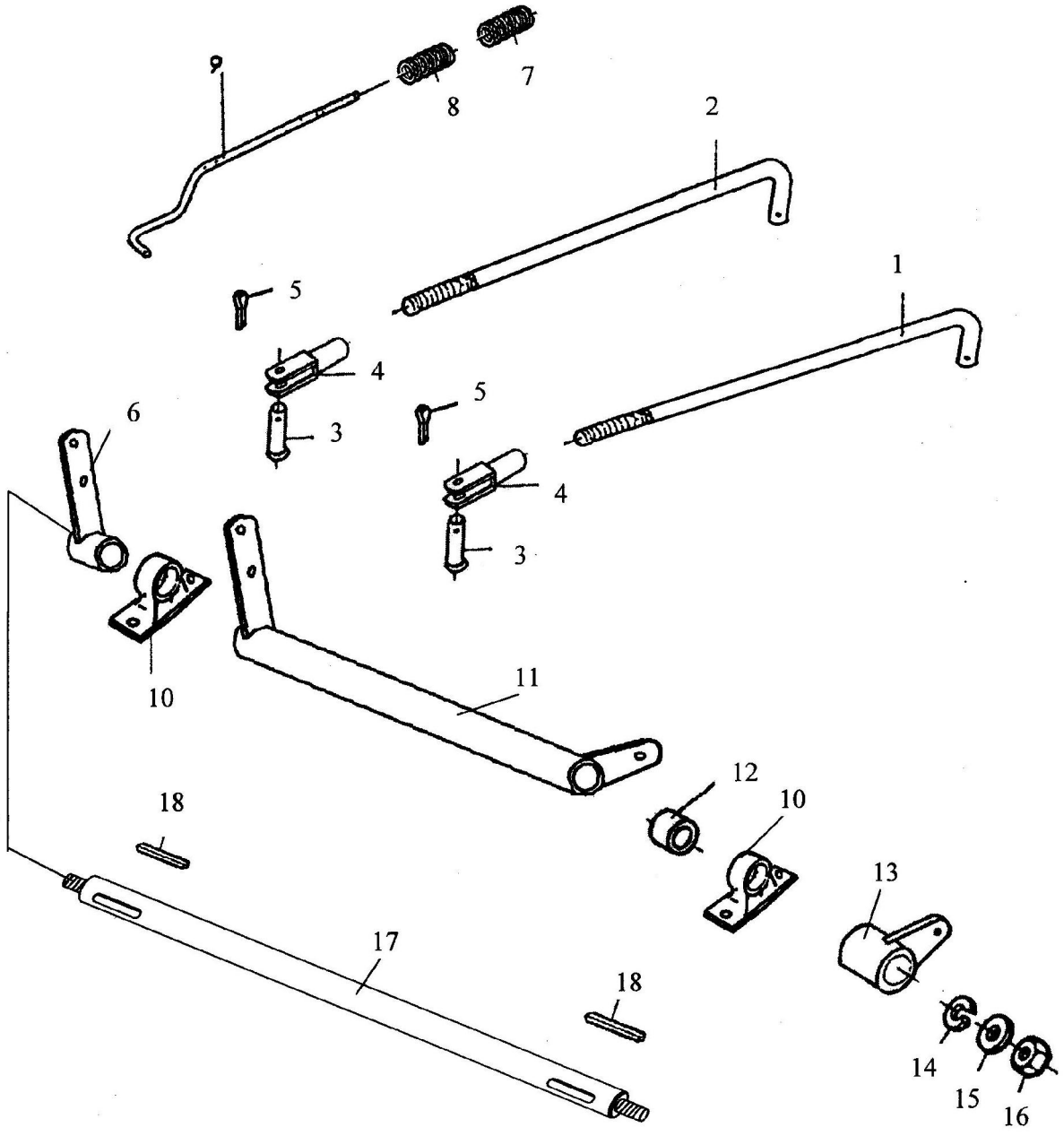

序号	件　号			数量		MODELS	备　　注
						3	
						0	
						7	
KEY	PART NO.	名　　称	DESCRIPTION	QTY	SERIAL NO.	0	REMARKS
1	YC11407	拉杆	ROD	1		×	
2	S36612	拉杆	ROD	1		×	
3	YC11774	销轴	PIN	2		×	
4	YC11770	连接叉	YOKE	2		×	
5	11G01626	销	COTTER	2		×	2.5x26 GB91-86 Zn.D
6	AYC10425	曲柄焊合	ECCENTRIC	1		×	
7	YC11902	弹簧	SPRING	1		×	
8	YC11901	弹簧	SPRING	1		×	
9	YC11409	拉杆	ROD	1		×	
10	YC11371	支座	SUPPORT	2		×	
11	AYC10424	管轴焊合	SHAFT	1		×	
12	YC11819	轴承衬套	BUSHING	2		×	
13	AYC10423	曲柄焊合	ECCENTRIC	1		×	
14	12M7014	垫圈	WASHER	2		×	12 GB93-87 Zn D
15	YC11783	挡圈	WASHER	2		×	
16	14M7031	螺母	NUT	2		×	M12 GB6170-86 8 Zn.D
17	S36610	轴	SHAFT	1		×	
18	49G00530	键	SHAFT KEY	2		×	8x30 GB1096-79

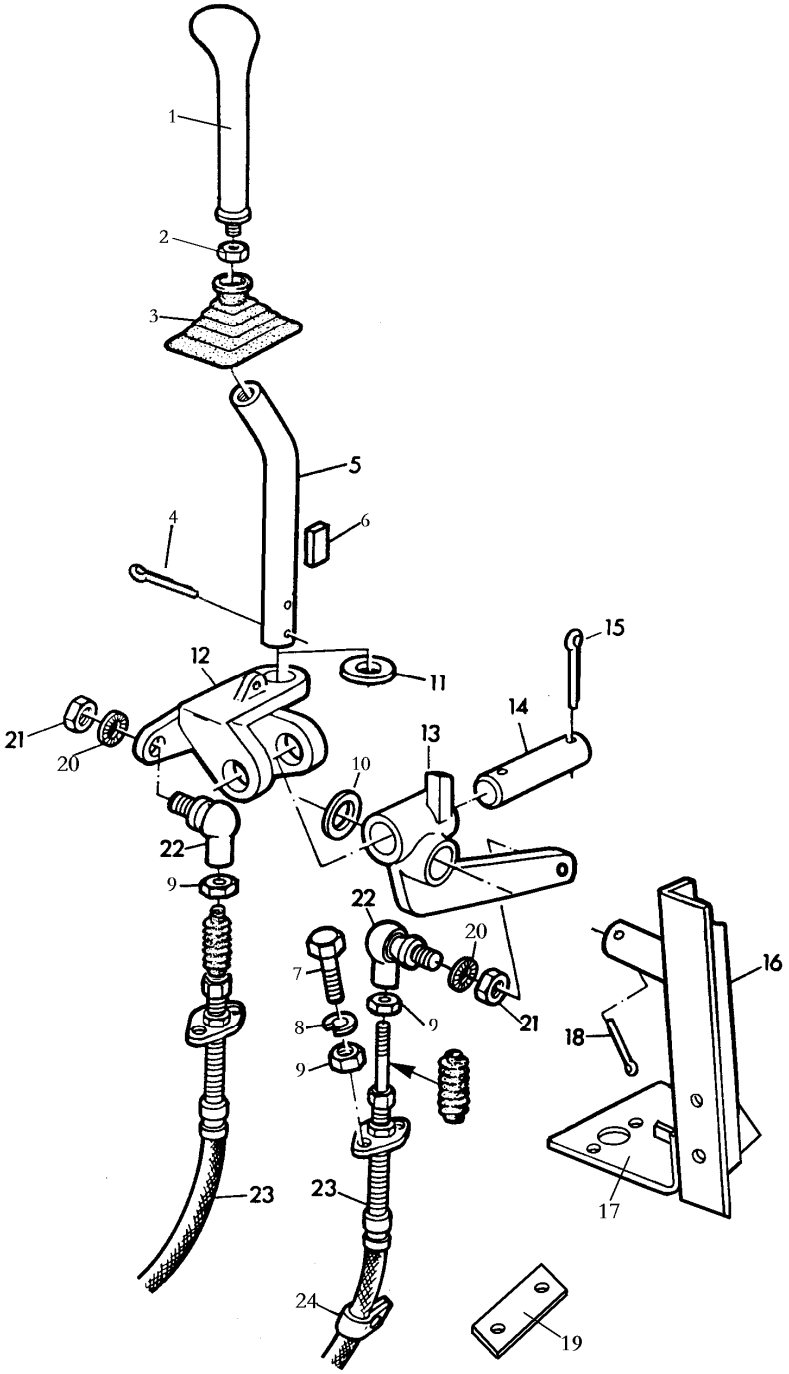
1
2
3
5
4
6
15
12
11
14
21
20
13
10
22
9
22
20
7
8
9
9
21
16
18
23
23
17
24
19

序号 KEY	件　号 PART NO.	名　　称	DESCRIPTION	数量 QTY	SERIAL NO.	MODELS 3 0 7 0	备　　注 REMARKS
1	AYC12290	长操纵手柄	GRIP	1		×	
2	14G01124	螺母	NUT	1		×	M12x1.25 GB6171-86 10 Zn.D
3	Z30194	手柄密封套	BOOT	1		×	
4	11G02030	开口销	COTTER PIN	2		×	4x30 GB91-86 Zn.D
5	Z41252	变速杆	LEVER	1		×	
6	49G00432	键	SHAFT KEY	1		×	6x32 GB1096-79
7	19M7560	螺栓	CAP SCREW	8		×	M6x16 GB5783-86 8.8 Zn.D
8	12M5737	垫圈	WASHER	8		×	6 GB93-87 Zn.D
9	14M7027	螺母	NUT	12		×	M6 GB6170-86 8 Zn.D
10	24M7053	垫圈	WASHER	2		×	16 GB97.1-85 Zn.D
11	24G20018	垫圈	WASHER	1		×	18 GB848-85 Zn.D
12	Z11213	支座	SUPPORT	1		×	
13	YC11372	转臂	LEVER	1		×	
14	Z30715	销轴	SHAFT PIN	1		×	
15	11G02026	销	CAP SCREW	2		×	4x26 GB91-86 Zn.D
16	AYC11897	支座焊合	BRACKET	1		×	
17	AYC11896	支架焊合	BRACKET	1		×	
18	11G02222	开口销	COTTER PIN	1		×	5x22 GB91-86 Zn.D
19	S39811	软轴固定板	BRACKET	1		×	
20	12M7008	垫圈	WASHER	2		×	8 GB93-87 Zn.D
21	14M7029	螺母	NUT	2		×	M8 GB6170-86 8 Zn.D
22	AZ19889	球铰--换挡	BALL JOINT	2		×	
23	AYC11409	变速软轴	PUSHPULL CABLE	2		×	
24	Z21993	管夹子	CLAMP	1		×	

FEEDER CONVEYOR HOUSING
输送器壳体

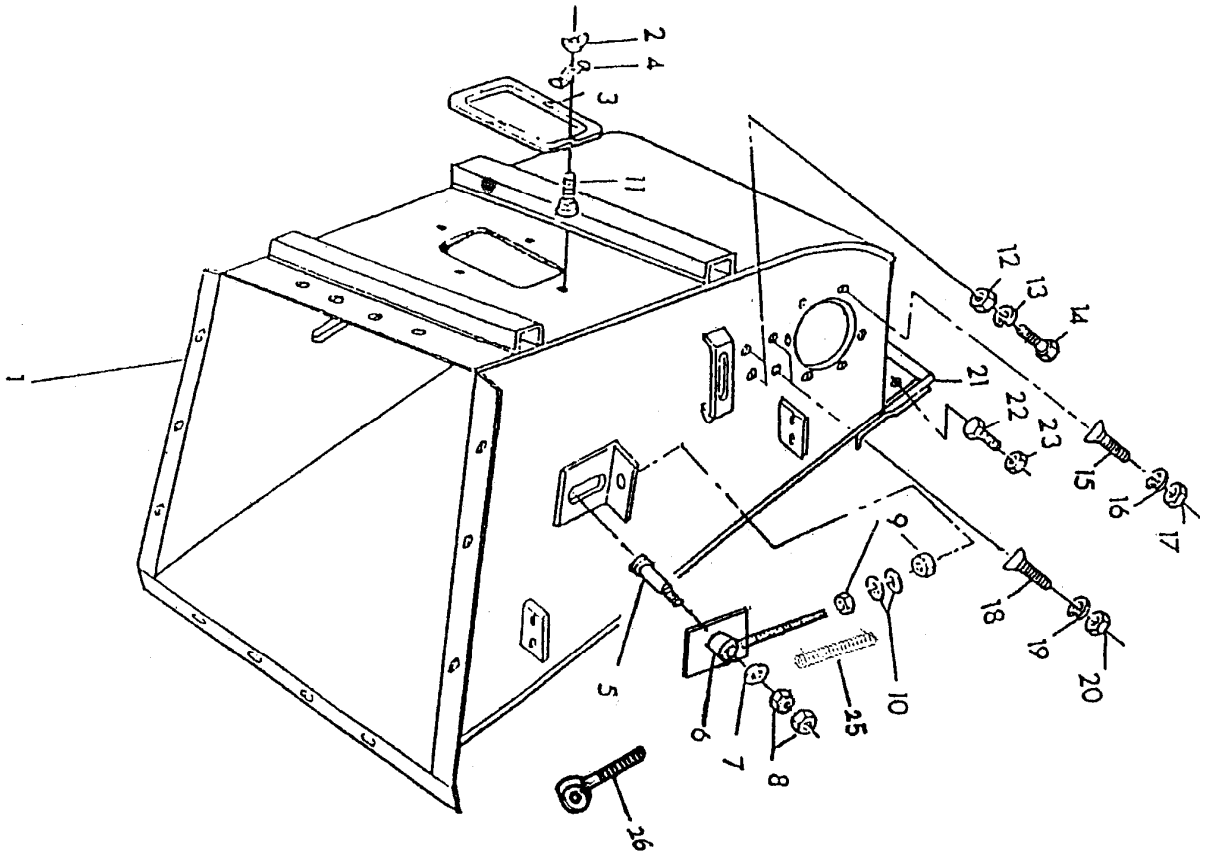

序号 KEY	件　号 PART NO.	名　　称	DESCRIPTION	数量 QTY	SERIAL NO.	MODEL 3 0 7 0	备　　注 REMARKS
1	AYC12108	过桥焊合	CONVEYOR	1		×	
2	YC12352	螺母	WINGNUT	4		×	M8 GB62-88.Zn.D
3	Z20713	上盖	COVER	1		×	
4	Z20367	夹子	CLAMP	4		×	
5	YC11744	轴	SHAFT	2		×	
6	AYC10190	调节拉杆	ADJUST BOLT	2		×	
7	24M7047	垫圈	WASHER	2		×	12 GB97.1-85 Zn.D
8	14M7031	螺母	NUT	4		×	M12 GB6170-86 8 Zn.D
9	14M7504	螺母	NUT	4		×	M14 GB6170-86 8 Zn.D
10	24M7085	垫圈	WASHER	4		×	14 GB97.1-85 Zn.D
11	03M7054	螺栓	SCREW	4		×	M8x20 GB14-88 8.8 Zn.D
12	14M7140	螺母	NUT	4		×	M10 GB6170-86 8 Zn.D
13	12M7013	弹垫	LOCK WASHER	4		×	10 GB93-87 Zn.D
14	19M7167	螺栓	CAP SCREW	4		×	M10x25GB5783-86 8.8Zn.D
15	21G40635	螺钉	SCREW	12		×	M10x35 GB68-85 4.8Zn.D
17	14G25102	螺母	NUT	12		×	M10 GB889-86 8 Zn.D
18	21M7134	螺钉	SCREW	4		×	M10x25 GB68-85 4.8Zn.D
19	12M7013	弹垫	LOCK WASHER	4		×	10 GB93-87 Zn.D
20	14M7140	螺母	NUT	4		×	M10 GB6170-86 8 Zn.D
21	YC10693	橡胶垫	GASKET	1		×	
22	19M7162	螺栓	SCREW	5		×	M8x16 GB5783-86 8.8Zn.D
23	14M7027	螺母	NUT	5		×	M6 GB6170-86 8 Zn.D
25	YC11743	弹簧	SPRING	2		×	
26	AYC10197	调节拉杆	ADJUST BOLT	2		×	

FEEDER CONVEYOR
输送器

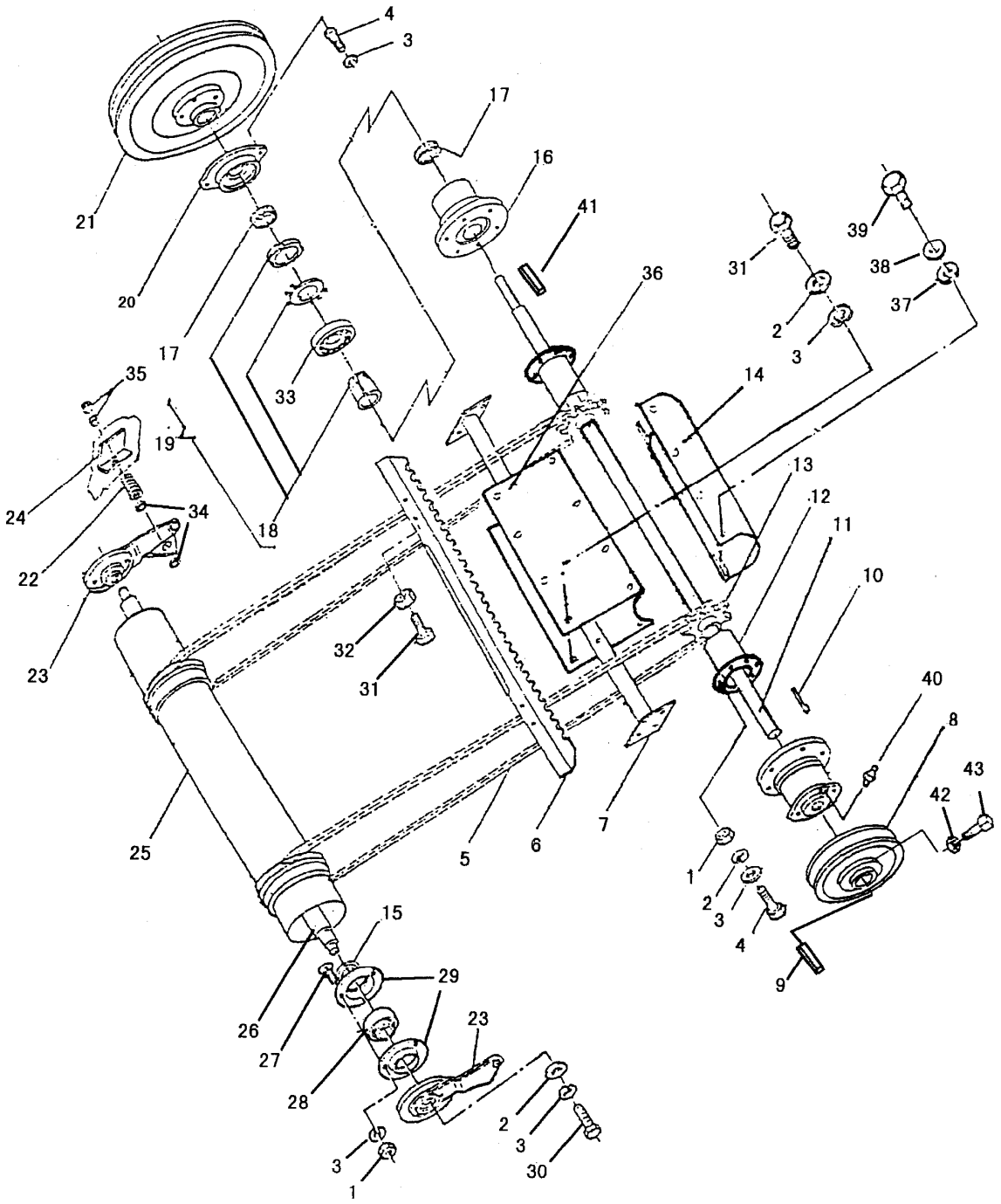

序号 KEY	件　号 PART NO.	名　　称	DESCRIPTION	数量 QTY	SERIAL NO.	MODELS 307 0	备　　注 REMARKS
1	14M7027	螺母	NUT	AR		×	M10GB6170-86 8 Zn.D
2	24M7028	垫圈	WASHER	AR		×	10 GB97.1-85 Zn.D
3	12M7013	弹垫	LOCK WASHER	AR		×	10 GB93-87 Zn.D
4	21G40635	螺钉	SCREW	12		×	M10x35 GB68-85 4.8Zn.D
5	AYC10181	链条	CHAIN	2		×	38*67
6	YC10699	齿耙	SLAT	16		×	
7	AYC10194	支架焊合	BRACKET	1		×	
8	YC10776	皮带轮	PULLEY	1		×	
9	49G01656	键	SHAFTKEY	1		×	B10x70 GB1096-79（带轮用）
10	50G01053	键	SHAFTKEY	2		×	10x60 GB1565-79 （链轮用）
11	YC10747	主动轴	SHAFTKEY	1		×	
12	AYC10196	挡草管	DEFLECTOR	2		×	L.H 左侧　R.H 右侧
13	YC11742	链轮	CHAIN SPROCKET	2		×	
14	YC10720	挡草板	DEFLECTOR	1		×	
15	40M7046	挡圈	WASHER	2		×	35 GB894.1-86 Zn.D
16	YC11741	轴承座	FLANGETTE	2		×	
17	F10003	胶质油封	SEAL	4		×	
18	T35	衬套	SPACER	2		×	130 GB306-64
19	00G11207	轴承	SPHERICAL BEARING	2		×	GB282-87
20	YC11740	轴承盖	PLANGETTE	2		×	
21	AYC10208	皮带轮	PULLEY	1		×	Φ=300
22	YC11743	弹簧	SPRING	2		×	
23	AYC10188	摇杆铆合	EDLER	2		×	
24	AD14-21	过桥壳体	CONVEYOR	1		×	
25	AYC10189	浮动轴	DRUM	1		×	
26	YC10734	轴	SHAFT	1		×	
27	19M7167	螺栓	CAP SCREW	12		×	M10x25 GB5783-86 8.8Zn.D
28	00G390507	轴承	SPHERICAL BEARING	2		×	GB3882-87
29	Z37382	轴承座	FLANGETTE	2		×	
30	19M7168	螺栓	CAP SCREW	2		×	M10x30 GB5783-86 8.8Zn.D
31	19G08418	螺栓	CAP SCREW	AR		×	M8x18 GB5783-86 8.8Zn.D
32	14M7307	螺母	NUT	64		×	M8 GB889-86 8 Zn.D
33	00G111208	轴承	SPHERICAL BEARING	2		×	
34	24M7047	垫圈	WASHER	4		×	12 GB97.1-85 Zn.D
35	14M7031	螺母	NUT	4		×	M12 GB6170-86 8Zn.D
36	AYC10195	挡草板	DEFLECTOR	1		×	
37	24M7034	垫圈	WASHER	8		×	6 GB96-85 Zn.D
38	12M5337	弹垫	LOCK WASHER	8		×	6 GB93-87 Zn.D
39	19M6614	螺栓	CAP SCREW	8		×	M6x12 GB5783-86 8.8Zn.D
40	58G21010	油杯	LUBRICATION FITTING	2		×	M10x1.00 GB1152-79
41	49G01650	键	SHAFTKEY	1		×	B10x50 GB1096-79
42	14M7029	螺母	NUT	4		×	M8 GB6170-86 8 Zn.D
43	22G36425	螺钉	CAP SCREW	4		×	M8X25 GB84-88 33H Zn.D

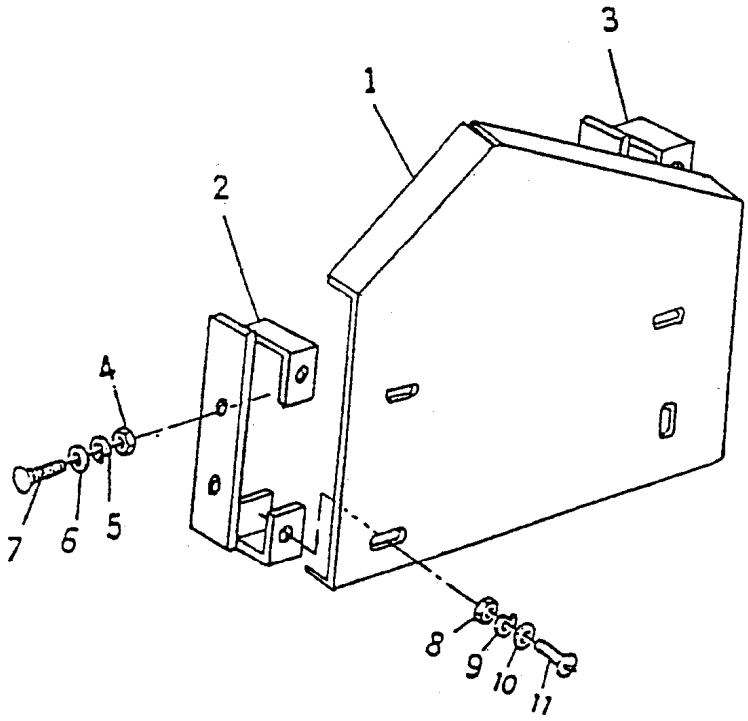
3
1
2
4
7
6
5
8
9
10
11

序号	件　号			数量		MODELS	备　注
						3	
						0	
						7	
KEY	PART NO.	名　称	DESCRIPTION	QTY	SERIAL NO.	0	REMARKS
1	AYC10185	护罩	GUARD	1		×	
2	YC10713	支架	HOLDER	1		×	
3	AYC10187	支架	HOLDER	1		×	
4	14M7029	螺母	NUT	4		×	M8 GB6170-86 8 Zn.D
5	12M7008	弹垫	LOCK WASHER	4		×	8 GB93-87 Zn.D
6	24M7055	垫圈	WASHER	8		×	8 GB97.1-85 Zn.D
7	19M7163	螺栓	CAP SCREW	4		×	M8x25 GB5783-86 8.8Zn.D
8	14M7027	螺母	NUT	4		×	M6 GB6170-86 8 Zn.D
9	12M5737	弹垫	LOCK WASHER	4		×	6 GB93-87 Zn.D
10	24M7054	垫圈	WASHER	8		×	6 GB97.1-85 Zn.D
11	19G08320	螺栓	CAP SCREW	4		×	M6x20 GB5783-86 8.8Zn.D

RASP BAR CYLINDER FOR WHEAT
纹杆滚筒

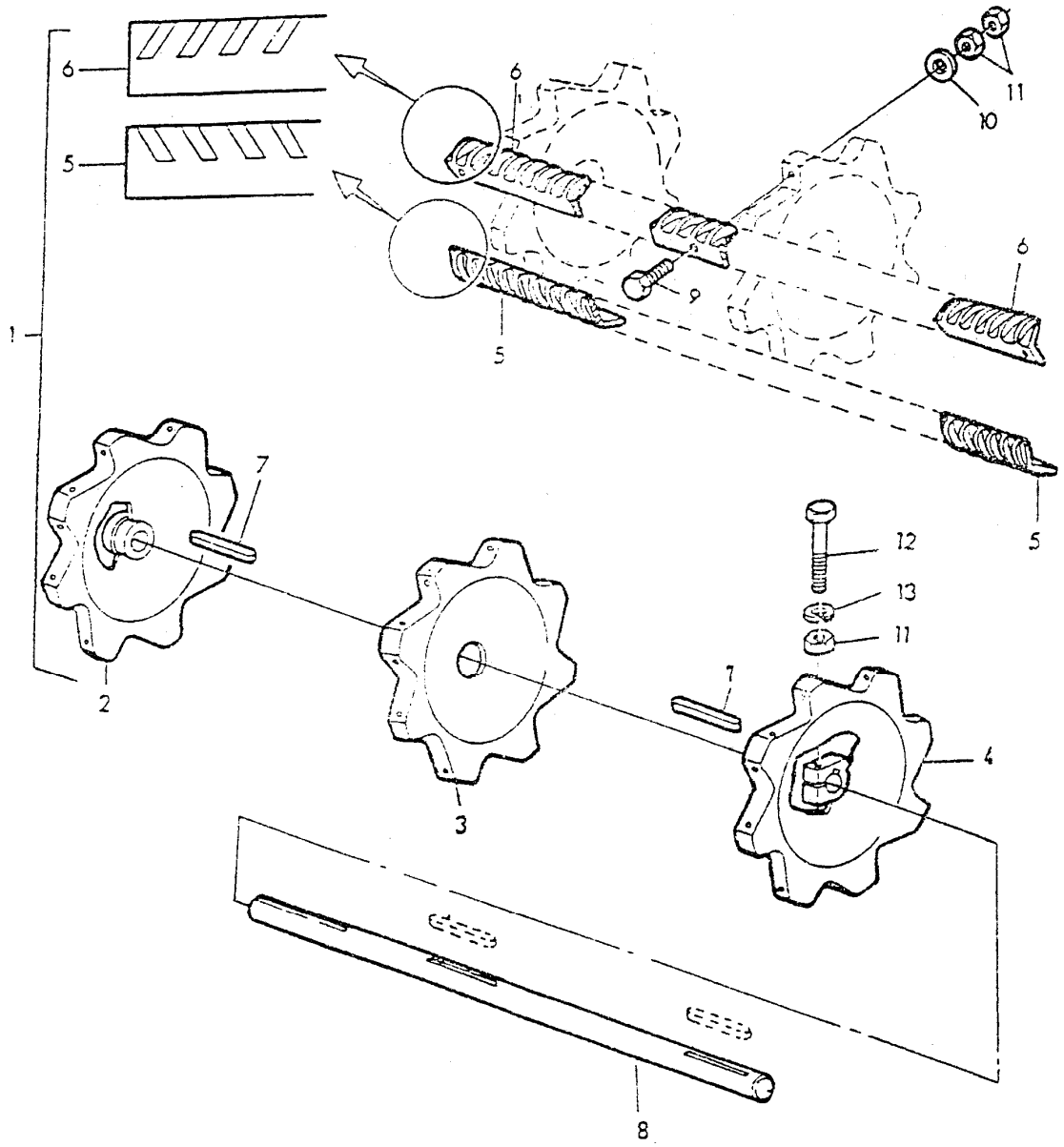

序号	件　号			数量		MODELS	备　　注
						3	
						0	
						7	
KEY	PART NO.	名　　称	DESCRIPTION	QTY	SERIAL NO.	0	REMARKS
1	AYC10228	纹杆滚筒装配	RASP BAR CYLINDER	1		×	
2	AYC10229	右侧花盘焊合	RASP BAR CENTER HUB	1		×	R.H 右侧
3	YC16180	中花盘	RASP BAR CENTER	1		×	
4	AYC10231	左侧花盘焊合	RASP BAR CENTER HUB	1		×	L.H 左侧
5	YC10847	右纹杆	RASP BAR	3		×	R.H 右旋
6	YC10848	左纹杆	RASP BAR	3		×	L.H 左旋
7	49G02756	键	SHAFT KEY	2		×	C12x70 GB1096-79
8	D21601	滚筒轴	SHAFT	1		×	2002 年以前产品
	YC10853	滚筒轴	SHAFT	1		×	2002 年以后产品
9	19G08640	螺栓	CAP SCREW	18		×	M12x40 GB5783-86 8.8 Zn.D
10	24G00012	垫圈	WASHER	18		×	12 GB97.1-85 Zn.D
11	14G00122	螺母	NUT	38		×	M12 GB6170-86 8 Zn.D
12	19G02452	螺栓	CAP SCREW	2		×	M12x80 GB5782-86 8.8 Zn.D
13	12G45012	弹垫	LOCK WASHER	18		×	12 GB93-87 Zn.D

CYLINDER DRIVE
滚筒传动

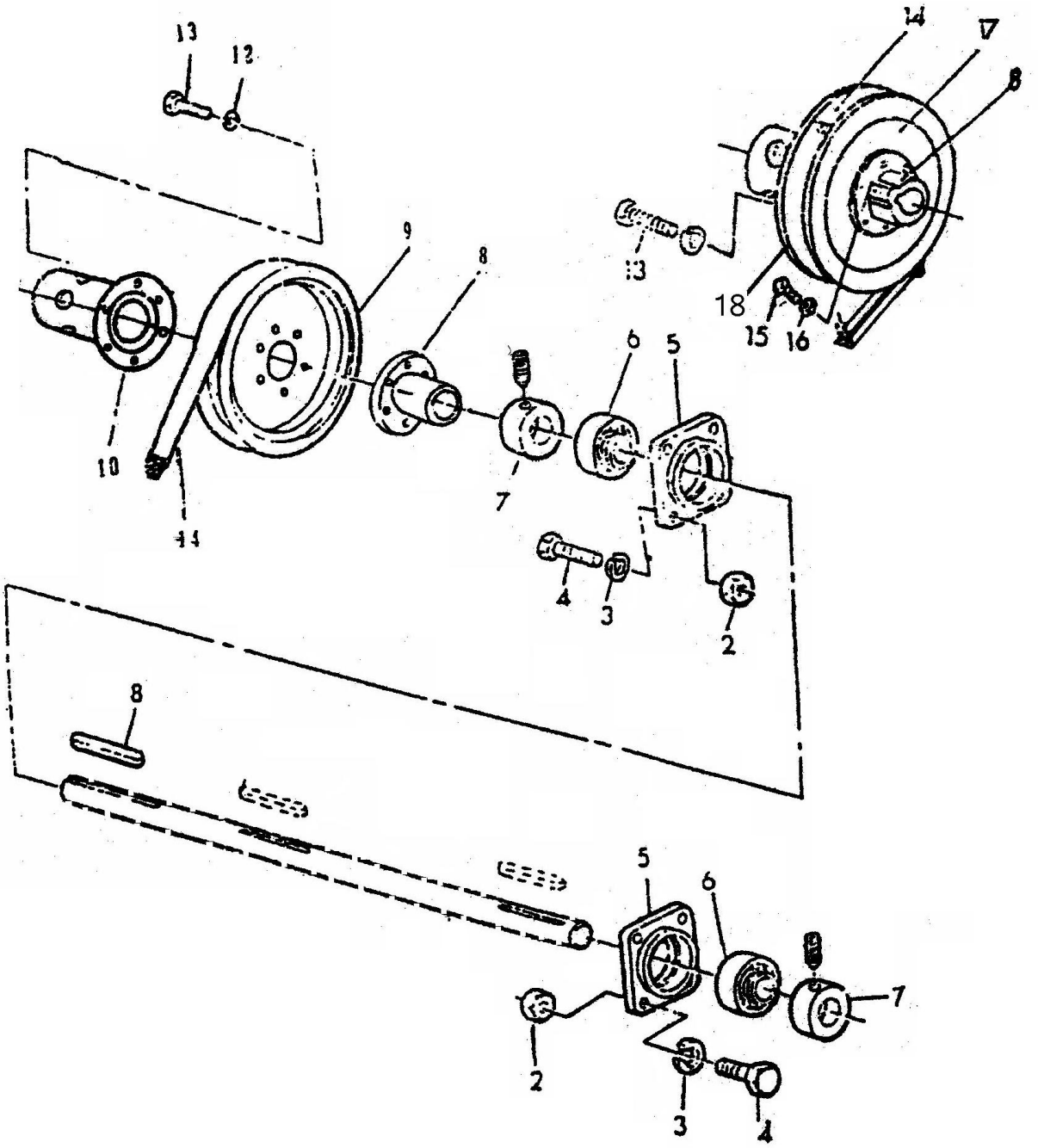

序号	件　号			数量		MODELS	备　　注
						3	
						0	
						7	
KEY	PART NO.	名　　称	DESCRIPTION	QTY	SERIAL NO.	0	REMARKS
2	14G00122	螺母	NUT	AR		×	M12 GB6170-86 8 Zn.D
3	12G45012	弹垫	LOCK WASHER	AR		×	12 GB93-87 Zn.D
4	19G08635	螺栓	BOLT	AR		×	M12x35 GB5783-86 8.8Zn.D
5	D24101	轴承座	CASE	2		×	
6	00G390208	轴承	BALL BEARING	2		×	GB3882-87
7	00GP508	锁紧环	LOCKINGCOLLAR	2		×	GB3882-87
8	D37140	轮毂	HUB	1		×	与D37117通用
9	AYC10445	皮带盘焊合	PULLEY	1		×	Φ275(小麦用)
	AYC10447	皮带盘焊合	PULLEY	1		×	Φ305(主机代件)
	AYC10458	皮带盘焊合	PULLEY	1		×	Φ330(水稻用)
10	YC11542	盘车件	HUB	1		×	
12	12G45008	垫圈	LOCK WASHER	6		×	8 GB93-87 Zn.D
13	19G08430	螺栓	BOLT	6		×	M8x30 GB5783-86 8.8Zn.D
14	YC12332	皮带	BELT	1		×	
15	19G08848	螺栓	CAP SCREW	3		×	M16x60 GB5783-86 8.8Zn.D
16	49G00750	键	KEY	1		×	12x50 GB1096-79
17	D37130	皮带盘焊合	PULLEY	1		×	Φ265
18	D37131	皮带盘	PULLEY	1		×	Φ265
19	D37132	调整垫圈	WASHER	1		×	

CONCAVE FOR WHEAT
凹板

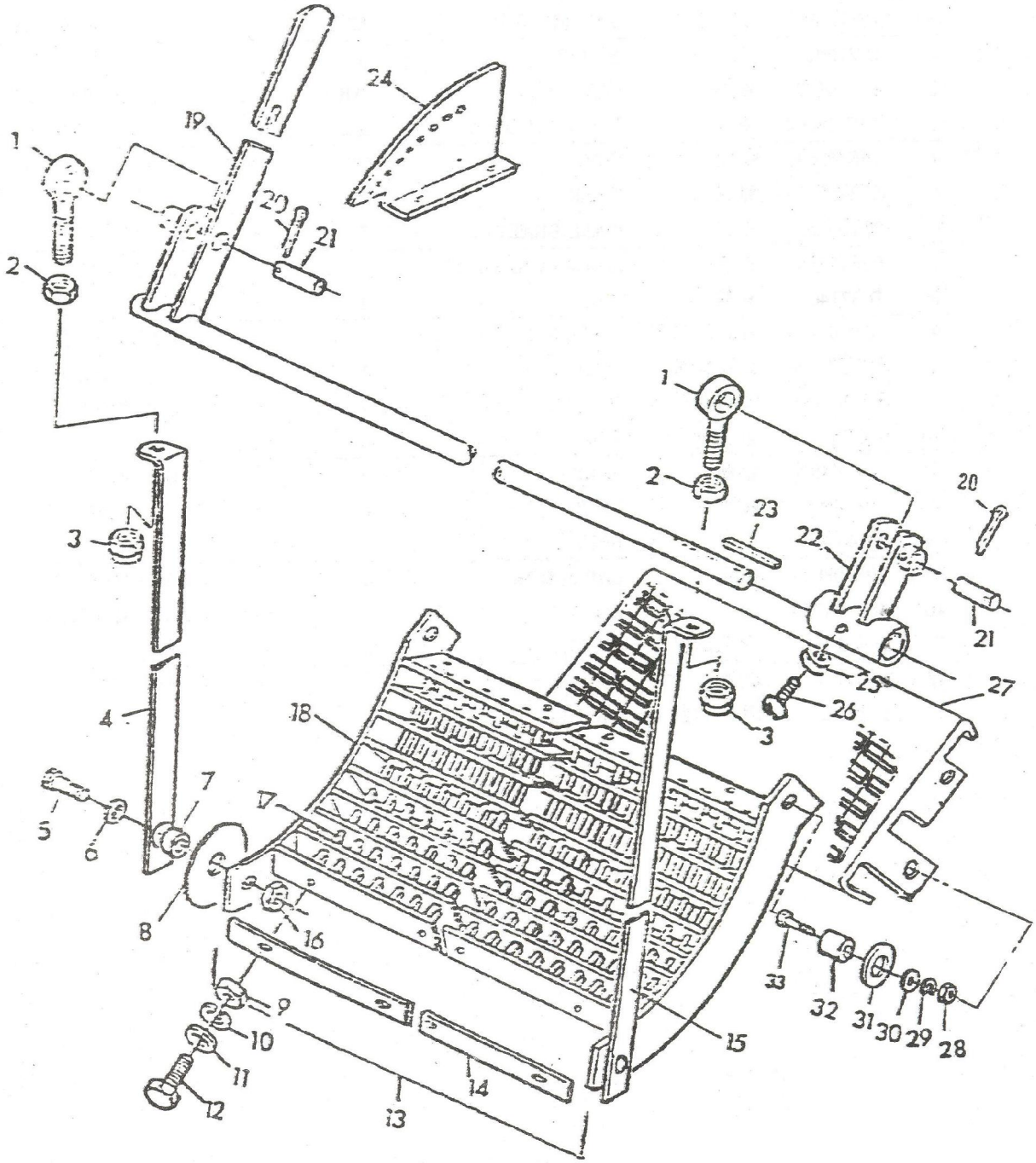

序号	件　号			数量		MODELS	备　　注
						3	
						0	
						7	
KEY	PART NO.	名　　称	DESCRIPTION	QTY	SERIAL NO.	0	REMARKS
1	YC14834	调节螺栓	EYEBOLT	2		×	
2	14G02169	螺母	NUT	2		×	M16 GB6172-86 05 Zn.D
3	14G25162	螺母	NUT	2		×	M16 GB889-86 8 Zn.D
4	YC10866	右拉杆	BRACE	1		×	R.H右侧
5	19G08745	螺栓	CAP SCREW	2		×	M14x40 GB5782-86 8.8Zn.D
6	12G45014	弹簧垫圈	LOCK WASHER	2		×	14 GB93-87 Zn.D
7	YC10880	间管	SPACER	2		×	
8	YC10855	右堵板	COVER	1		×	
9	14G00082	螺母	NUT	6		×	M8 GB6170-86 8 Zn.D
10	12G45008	弹簧垫圈	LOCK WASHER	6		×	8 GB93-87 Zn.D
11	24G00008	垫圈	WASHER	6		×	8 GB97.1-85 Zn.D
12	19G08420	螺母	NUT	6		×	M8x20 GB5783-86 8 Zn.D
13	AYC10239	小麦凹板装配	CONCAVE FOR WHEAT	1		×	
14	D22408	格条挡板	SHEET	2		×	
15	YC10872	左拉杆	BRACE	1		×	L.H左侧
16	14G00142	螺母	NUT	2		×	M14GB6170-86 8 Zn.D
17	YC10876	凹板格条	WIRE	46		×	
18	AYC10236	小麦凹板焊合	CONCAVE FOR WHEAT	1		×	FOR WHEAT
	AYC10244	水稻凹板总成	CONCAVE FOR RICE	1		×	FOR RICE
19	AYC12050	凹板调节轴焊合	SHAFT	1		×	
20	11G02036	开口销	COTTER PIN	2		×	4x36 GB91-86 Zn.D
21	YC10879	销轴	PIN	2		×	
22	AYC11612	连接架	LEVER	1		×	
23	49G01532	键	SHAFT KEY	1		×	GB 1096 B8x32
24	YC14272	扇形固定板	RETAINER	1		×	
25	14G00082	螺母	NUT	1		×	M8 GB6170-86 8 Zn.D
26	22G36425	螺钉	CAP SCREW	1		×	M8x25 GB84-88 33HZn.D
27	AYC10242	过渡板	STRAP	1		×	
28	14G00122	螺母	NUT	2		×	M12GB6170-86 8 Zn.D
29	12G45012	弹簧垫圈	LOCK WASHER	2		×	12 GB93-87 Zn.D
30	24G10012	垫圈	WASHER	2		×	12 GB97.1-85 Zn.D
31	D22410	调整垫	WASHER	6		×	
32	YC10878	间管	SPACER	2		×	
33	19G08640	螺栓	CAP SCREW	2		×	M12x40 GB5783-86 8.8 Zn.D

SPIKE TOOTH CYLINDER FOR RICE
钉齿滚筒

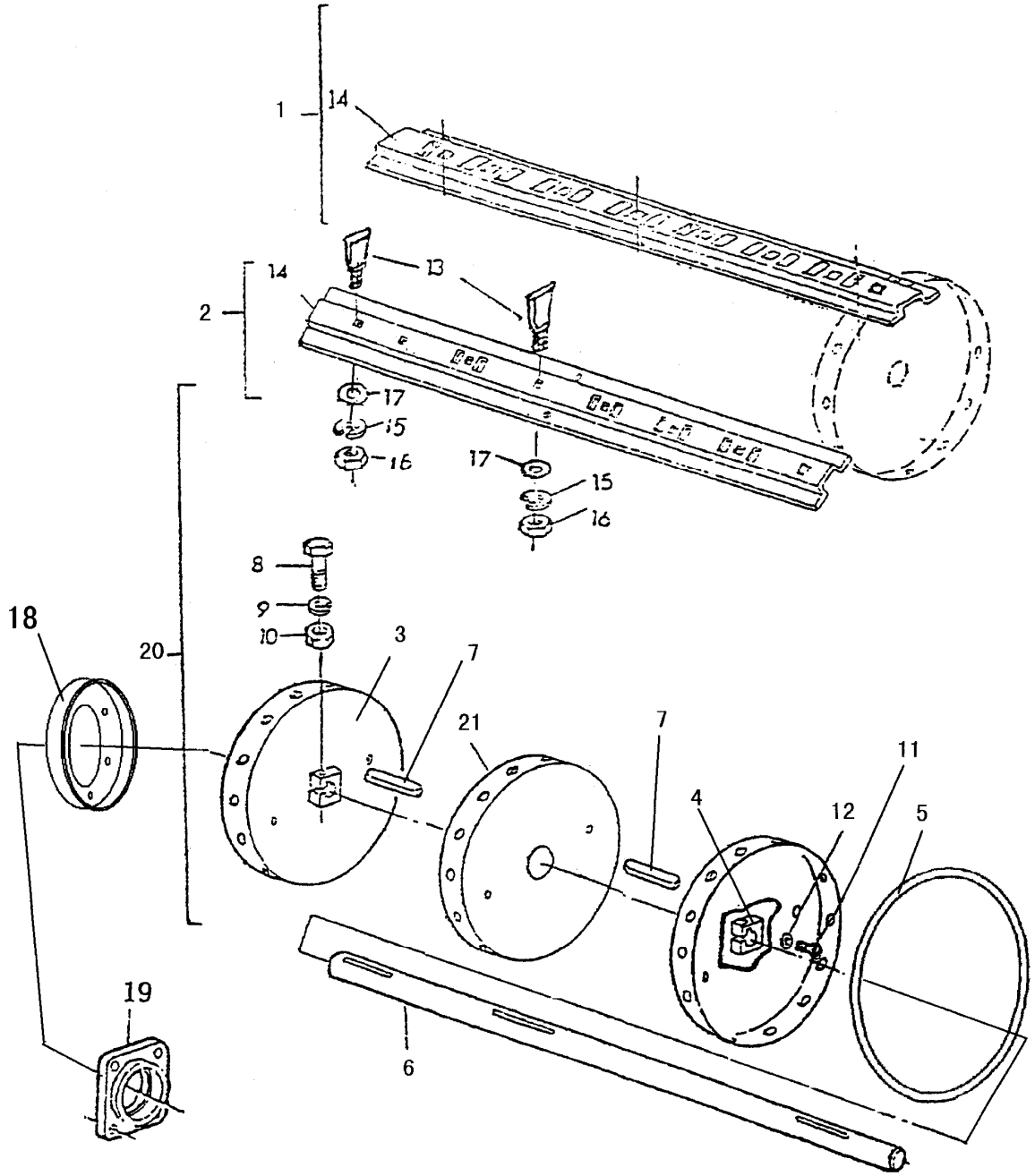

序号 KEY	件　号 PART NO.	名　　称	DESCRIPTION	数量 QTY	SERIAL NO.	MODELS 3 0 7 0	备　　注 REMARKS
1	AYC10232	钉齿杆装配	CYL ASSY	3		×	
2	AYC10233	钉齿杆装配	CYL ASSY	3		×	
3	AYC10234	滚筒复盘	RASP BAR CENTER	2		×	
4	D37140	轮毂	HUB	2		×	
5	YC10854	加强筋圈	HOLDER	2		×	
6	YC10853	轴	SHAFT	1		×	
7	49G02756	键	SHAFT KEY	2		×	
8	19G02349	螺栓	SCREW	2		×	M10x65 GB5702
9	12G45010	弹垫	LOCK WASHER	2		×	10 GB93
10	14G00102	螺母	NUT	2		×	M10 GB6170
11	19G08430	螺栓	SCREW	12		×	M8x30 GB5783
12	12G45008	弹垫	LOCK WASHER	12		×	8 GB93
13	YC13068	钉齿	SPIKE —TOOTH	78		×	
14	D21525	齿杆	TOOTH HOLDER	6		×	
15	12G45012	弹垫	LOCK WASHER	78		×	12 GB93
16	14G00122	螺母	NUT	78		×	M12 GB6170
17	24G00012	弹垫	WASHER	AR		×	12 GB97
18	AYC10241	防缠圈	SNAP RING	2		×	
19	D24101	轴承座	QUILL	2		×	
20	AYC10235	钉齿滚筒总成	CYL ASSY	1		×	
21	AYC13257	幅盘焊合	CYLINDER	1		×	

SEPARATING CYLINDER
分离滚筒

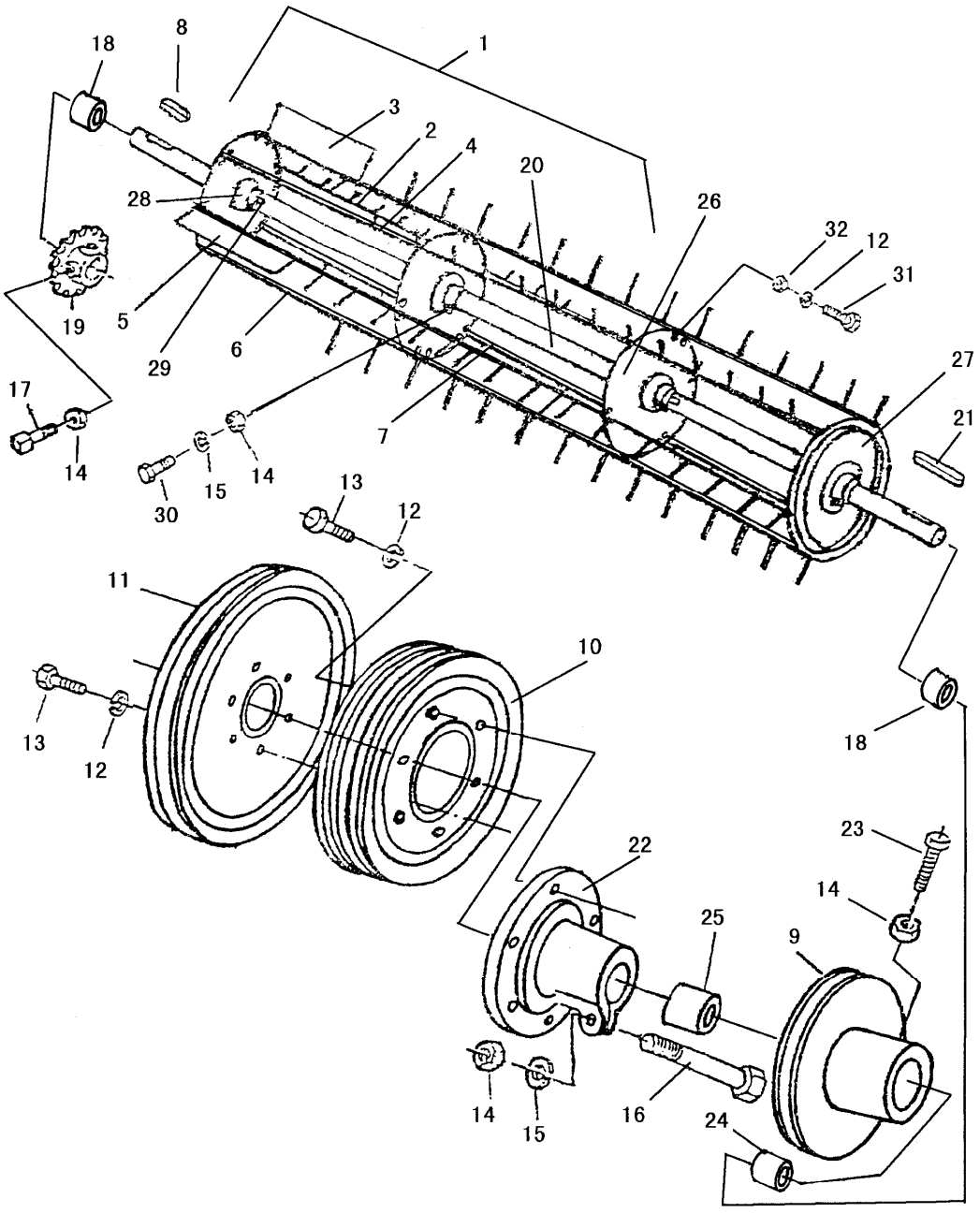

序号 KEY	件　号 PART NO.	名　　称	DESCRIPTION	数量 QTY	SERIAL NO.	MODELS 307 0	备　　注 REMARKS
1	AYC10249	杆齿式分离滚筒	SPIKE CYLINDER	1		×	
2	AYC10251	齿杆焊合（一）	SPIKE HOLDER (1)	1		×	
3	AYC10252	齿杆焊合（二）	SPIKE HOLDER (2)	1		×	
4	AYC10253	齿杆焊合（三）	SPIKE HOLDER (3)	1		×	
5	AYC10254	齿杆焊合（四）	SPIKE HOLDER (4)	1		×	
6	AYC10255	齿杆焊合（五）	SPIKE HOLDER (5)	1		×	
7	AYC10256	齿杆焊合（六）	SPIKE HOLDER (6)	1		×	
8	49G00740	键 12x40	SHAFT KEY	1		×	GB1096-79
9	YC11434	皮带轮	PULLEY	1		×	
10	YC11437	多槽轮	PULLEY	1		×	
11	AYC10444	皮带盘焊合	HALF SHAVE	1		×	D型Φ385
	AYC10446	皮带盘焊合	HALF SHAVE	1		×	D型Φ355(原机带件变速用)
	AYC10458	皮带盘焊合	HALF SHAVE	1		×	D型Φ330 （水稻专用)
12	12G45008	垫圈 8	LOCK WASHER	AR		×	GB93-87 Zn.D
13	19G08425	螺栓 M8x25	CAP SCREW	12		×	GB5783-86 8.8 Zn.D
14	14G00102	螺母 M10	NUT	9		×	GB6170-86 8 Zn.D
15	12G45010	垫圈 10	LOCK WASHER	5		×	GB93-87 Zn.D
16	19G08549	螺栓 M10x65	CAP SCREW	1		×	GB5783-86 Zn.D
17	22G36525	螺钉 M10x25	SCREW	2		×	GB84-88 33H Zn.D
18	YC10890	间管	SPACER	2		×	机壁里侧
19	YC11445	第二滚筒链轮	CHAIN SPROCKET	1		×	
20	YC10895	轴	SHAFT	1		×	
21	49G00770	键 12x140	SHAFT KEY	1		×	GB1096-79
22	YC11449	轮毂	HUB	1		×	
23	22G36525	螺钉 M10x25	SCREW	2		×	GB84-88 33H Zn.D
24	YC11558	间管	SPACER	1		×	
25	YC11568	间管	SPACER	1		×	
26	YC10887	幅盘	RASP BAR CENTER	2		×	
27	AYC10247	幅盘焊合	RASP BAR CENTER	2		×	
28	D37140	轮毂	HUB	4		×	
29	49G00740	键 12x40	SHAFT KEY	2		×	GB1096-79
30	19G02349	螺栓 M10x65	SCREW	4		×	GB5782-86 8.8 Zn.D
31	19G08420	螺栓 M8x20	SCREW	72		×	GB5783-86 8.8 Zn.D
32	14G00082	螺母 M8	NUT	AR		×	GB6170-86 8 Zn.D

COVER
盖板

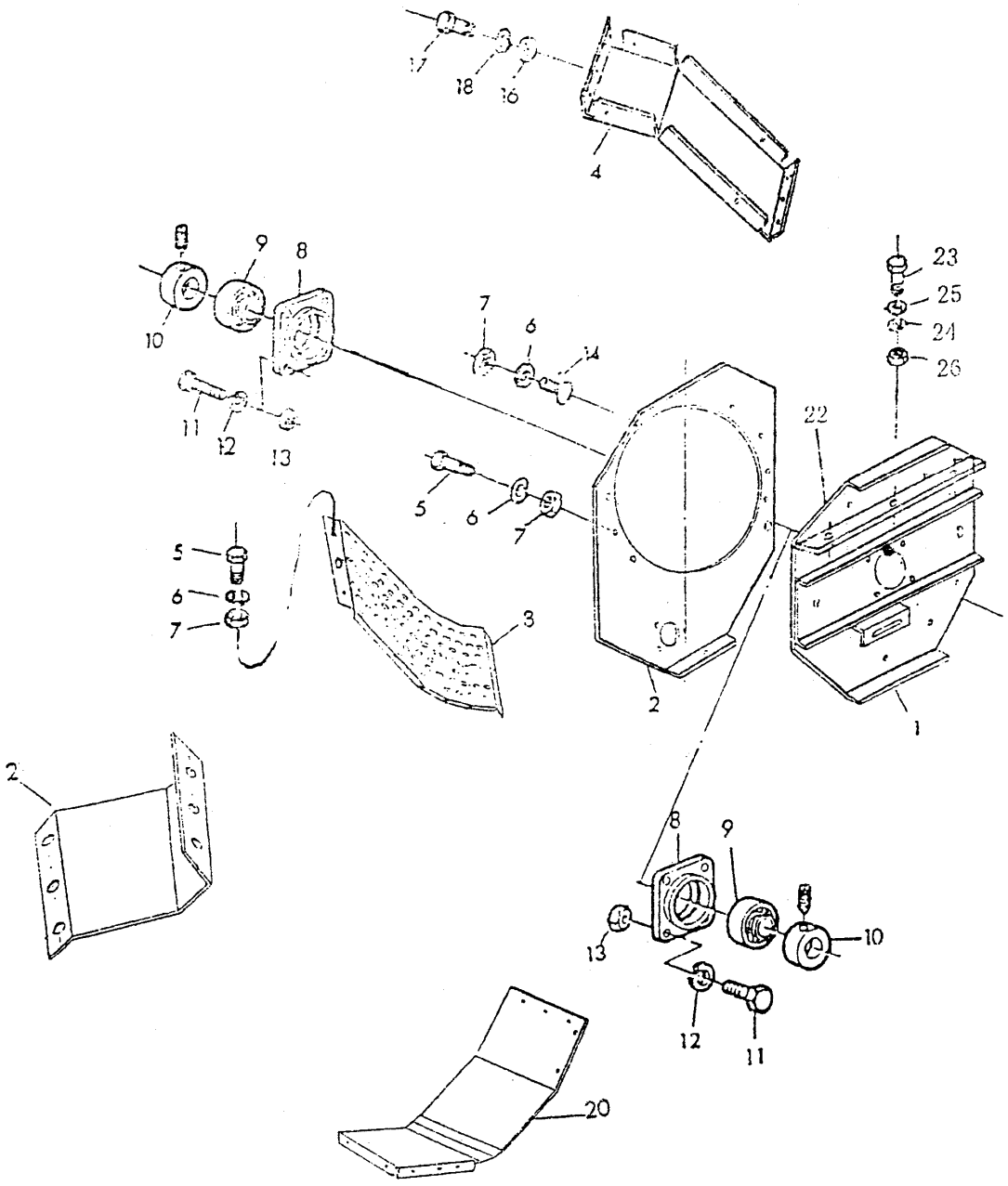
17
18
16
4
9
8
10
7
6
14
11
12
13
5
6
7
23
25
24
26
22
5
6
7
3
2
1
2
8
9
13
10
12
11
20

序号 KEY	件　号 PART NO.	名　　称	DESCRIPTION	数量 QTY	SERIAL NO.	MODELS 3 0 7 0	备　　注 REMARKS
1	AYC10268	滚筒盖板	COVER SHEET	1		×	
2	AYC10265	侧壁板	SIDE WALL	1		×	
3	YC10941	排草挡板	SHEET	1		×	
4	YC10932	排草挡板	SHEET	1		×	
5	19G08420	螺栓	CAP SCREW	14		×	M8x20 GB5783-86 8.8 Zn.D
6	12G45008	弹垫	LOCK WASHER	17		×	8 GB93-87 Zn.D
7	14G00082	螺母	NUT	17		×	M8 GB6170-86 8 Zn.D
8	D24101	轴承座	FLANGTEE	2		×	
9	00G390208	球面轴承	BALL BEARING	2		×	GB3882-87
10	00GP508	锁紧环	LOCKINGCOLLAR	2		×	GB3882-87
11	19G08630	螺栓	CAP SCREW	8		×	M12x30 GB5783-86 8.8 Zn.D
12	12G45012	弹垫	LOCK WASHER	8		×	12 GB93-87 Zn.D
13	14G00122	螺母	NUT	8		×	M12 GB6170-86 8 Zn.D
14	03G24320	螺栓	SCREW	3		×	M8x20 GB14-88 8.8 Zn.D
16	14G00062	螺母	NUT	5		×	M6 GB6170-86 8 Zn.D
17	19G08320	螺栓	CAP SCREW	5		×	M6x20 GB5783-86 8.8 Zn.D
18	12G45006	弹垫	LOCK WASHER	5		×	6 GB93-87 Zn.D
20	YC10939	排草底板	SHEET	1		×	
21	YC10942	折板	SHEET	1		×	
22	YC10944	排草挡板	SHEET	1		×	
23	19G08416	螺栓	SCREW	3		×	M8x16 GB5783-86 8.8 Zn.D
24	12G45008	弹垫	LOCK WASHER	3		×	8 GB93-87 Zn.D
25	24G00008	垫圈	WASHER	3		×	8 GB97.1-85 Zn.D
26	14G00082	螺母	NUT	3		×	M8 GB6170-86 8 Zn.D

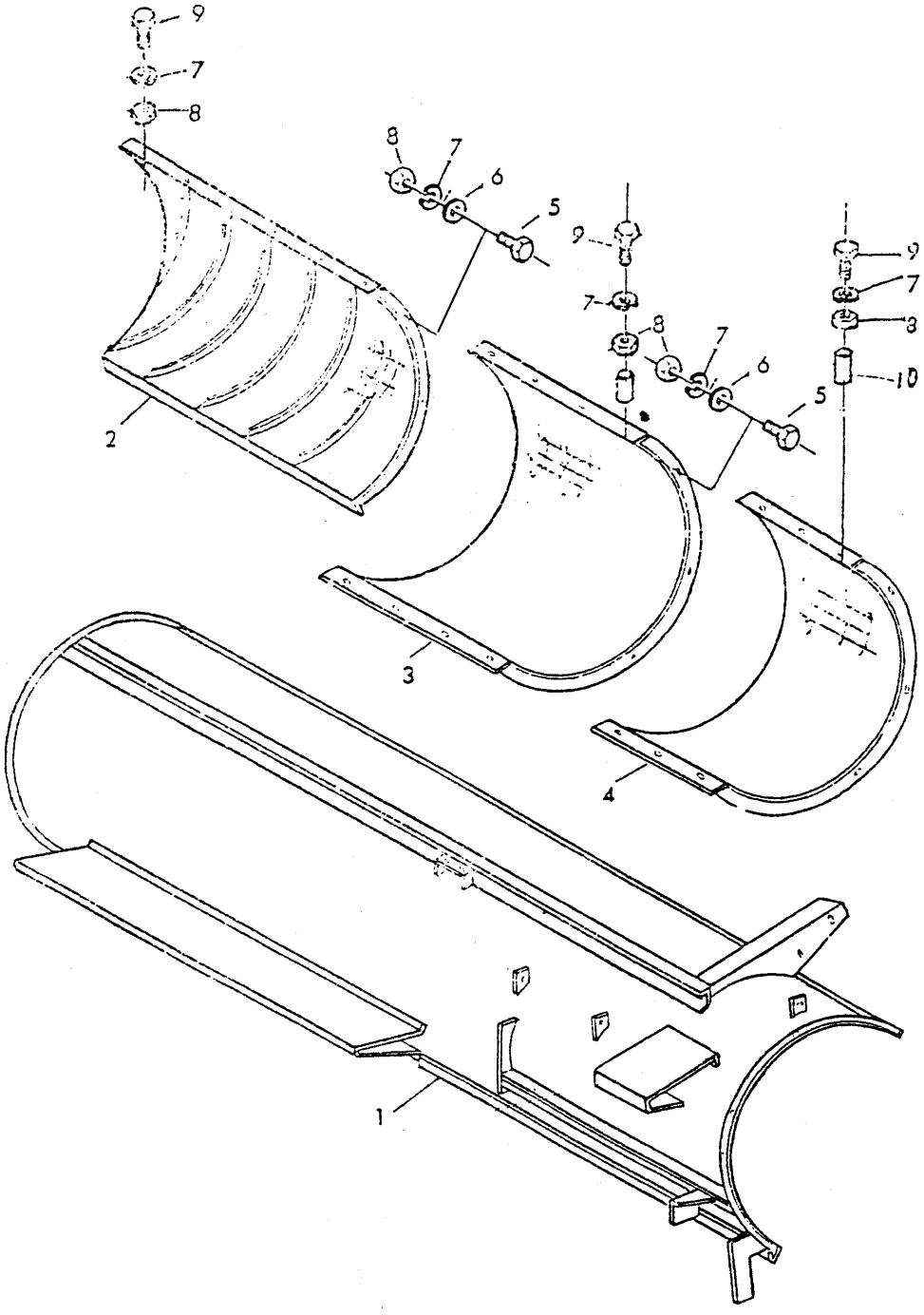
9
7
8
6
5
10
1
2
3
4

序号	件　号			数量		MODELS 3 0 7	备　注
KEY	PART NO.	名　称	DESCRIPTION	QTY	SERIAL NO.	0	REMARKS
1	AYC11406	分离滚筒壳	HOUSING	1		×	
2	AYC10272	第一段分离凹板	CONCAVE	2		×	
3	AYC10273	第二段分离凹板	CONCAVE	3		×	
4	AYC10270	第三段分离凹板	CONCAVE	4		×	
5	19G08420	螺栓	CAP SCREW	5		×	M8X20 GB5782-86 8.8Zn.D
6	24G00008	垫圈	WASHER	6		×	8 GB97-85 Zn.D
7	12G45008	弹垫	LOCK WASHER	7		×	8 GB93-87 Zn.D
8	14G00082	螺母	NUT	8		×	M8 GB6170-86 8 Zn.D
9	19G08416	螺栓	CAP SCREW	9		×	M8X16 GB5783-86 8.8Zn.D
10	YC10974	间管	SPACER	10		×	

TAILINGS ANDCLEAN GRAIN AUGER
搅龙

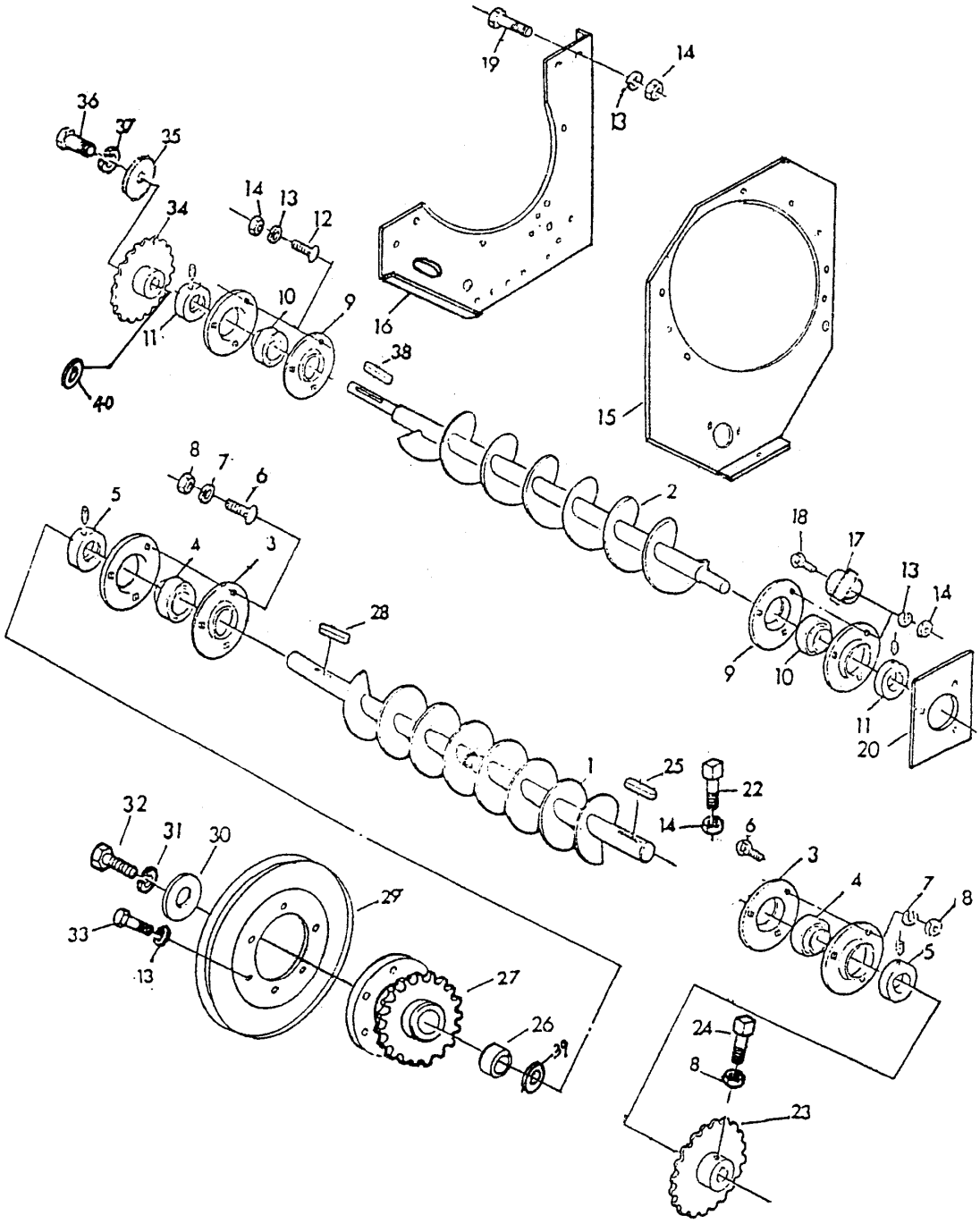

序号 KEY	件　号 PART NO.	名　　称	DESCRIPTION	数量 QTY	SERIAL NO.	MODELS 3 0 7 0	备　　注 REMARKS
1	AYC10267	分离下搅龙	AUGER	1		×	
2	AYC10269	后分离搅龙	AUGER	1		×	
3	YC17265	轴承座	FLANGETTE	4		×	
4	00G390207	球面轴承	BALL BEARING	2		×	GB3882-87
5	00GP507	锁紧环	LOCKINGCOLLAR	2		×	GB3882-87
6	03G24425	螺栓	CAPSCREW	6		×	M10x25 GB14-88 8.8Zn.D
7	12G45010	弹垫	LOCK WASHER	6		×	10 GB93-87 Zn.D
8	14G00102	螺母	NUT	8		×	M10 GB6170-86 8Zn.D
9	P47232	轴承盖	FLANGETTE	4		×	
10	00G390205	球面轴承	BALL BEARING	2		×	GB3882-87
11	00GP505	锁紧环	LOCKINGCOLLAR	2		×	GB3882-87
12	03G24320	螺栓	SCREW	3		×	M8x20 GB14-88 8.8Zn.D
13	12G45008	弹垫	LOCK WASHER	16		×	8 GB93-87 Zn.D
14	14G00082	螺母	NUT	12		×	M8 GB6170-86 8Zn.D
15	AYC10265	第四块侧壁板	SIDE WALL	1		×	
16	AYC10266	第三块侧壁板	SIDE WALL	1		×	
17	AYC10264	盖	COVER	1		×	
18	03G24330	螺栓	SCREW	3		×	M8x30 GB14-88 8.8Zn.D
19	19G08416	螺栓	CAPSCREW	2		×	M8x16 GB5783-86 8.8Zn.D
20	YC10923	挡板	PLATE	1		×	
22	22G36425	螺钉	SCREW	2		×	M8X25 GB84-88 33H Zn.D
23	YC11447	链轮	CHAIN SPROCKET	1		×	
24	22G36525	螺钉	SCREW	2		×	M10x25 GB84-88 33H Zn.D
25	49G00635	键	SHAFT KEY	1		×	10x35 GB1096-79
26	YC11559	间管	SPACER	1		×	
27	YC11446	链轮	CHAIN SPROCKET	1		×	Z=19
28	49G00640	键	SHAFT KEY	1		×	10x40 GB1096-79
29	AYC10449	皮带轮	PULLEY	1		×	Φ=346
30	D37411	挡圈	SNAPRING	1		×	
31	12G45012	弹垫	LOCK WASHER	1		×	12 GB93-87 Zn.D
32	19G08640	螺栓	CAPSCREW	1		×	M12x40 GB5783-86 8.8Zn.D
33	19G08420	螺栓	CAPSCREW	6		×	M8x20 GB5783-86 8.8Zn.D
34	YC11429	链轮	CHAIN SPROCKET	1		×	Z=19
35	YC11461	挡圈	SNAPRING	1		×	
36	19G08530	螺栓	CAPSCREW	1		×	M10x30 GB5783-86 8.8Zn.D
37	12G45010	弹垫	LOCK WASHER	1		×	10 GB93-87 Zn.D
38	49G00535	键	SHAFT KEY	1		×	8x35 GB1096-79
39	D37413	垫圈	WASHER	1		×	
40	L19162	垫圈	WASHER	2		×	

CYLINDER COVER
前盖板

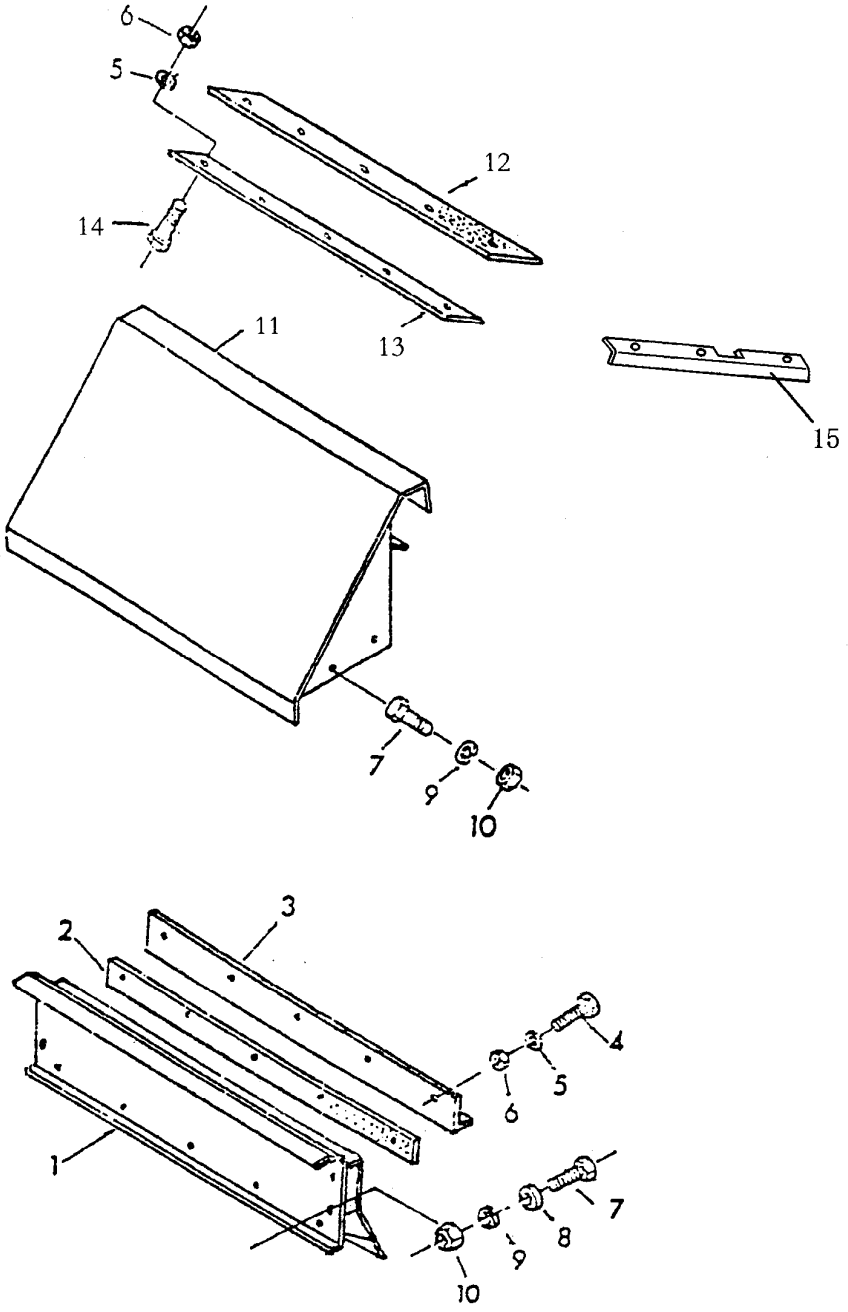

序号 KEY	件　号 PART NO.	名　　称	DESCRIPTION	数量 QTY	SERIAL NO.	MODELS 3 0 7 0	备　　注 REMARKS
1	AYC10260	滚筒前盖板	COVER PLATE	1		×	
2	YC10898	密封板	GASKET	1		×	
3	YC10918	压板	REINFORCEMENT	1		×	
4	19G08320	螺栓	CAP SCREW	5		×	M6X20 GB5783-86 8.8Zn.D
5	12G45006	弹垫	LOCK WASHER	10		×	6 GB93-87 Zn.D
6	14G00062	螺母	NUT	10		×	M6 GB6170-86 8 Zn.D
7	19G08420	螺栓	CAP SCREW	10		×	M8X20 GB5783-86 8.8Zn.D
8	24G00008	垫圈	WASHER	6		×	8 GB97-85 Zn.D
9	12G45008	弹垫	LOCK WASHER	10		×	8 GB93-87 Zn.D
10	14G00082	螺母	NUT	10		×	M8 GB6170-86 8 Zn.D
11	AYC10258	过渡板	PLATE	1		×	
12	YC14589	密封板	GASKET	1		×	
13	YC10916	压条	REINFORCEMENT	1		×	
14	19G08316	螺栓	CAP SCREW	5		×	M6X16 GB5782-86 8.8Zn.D
15	YC14591	折板	PLATE	1		×	

REAR COVER
后盖板

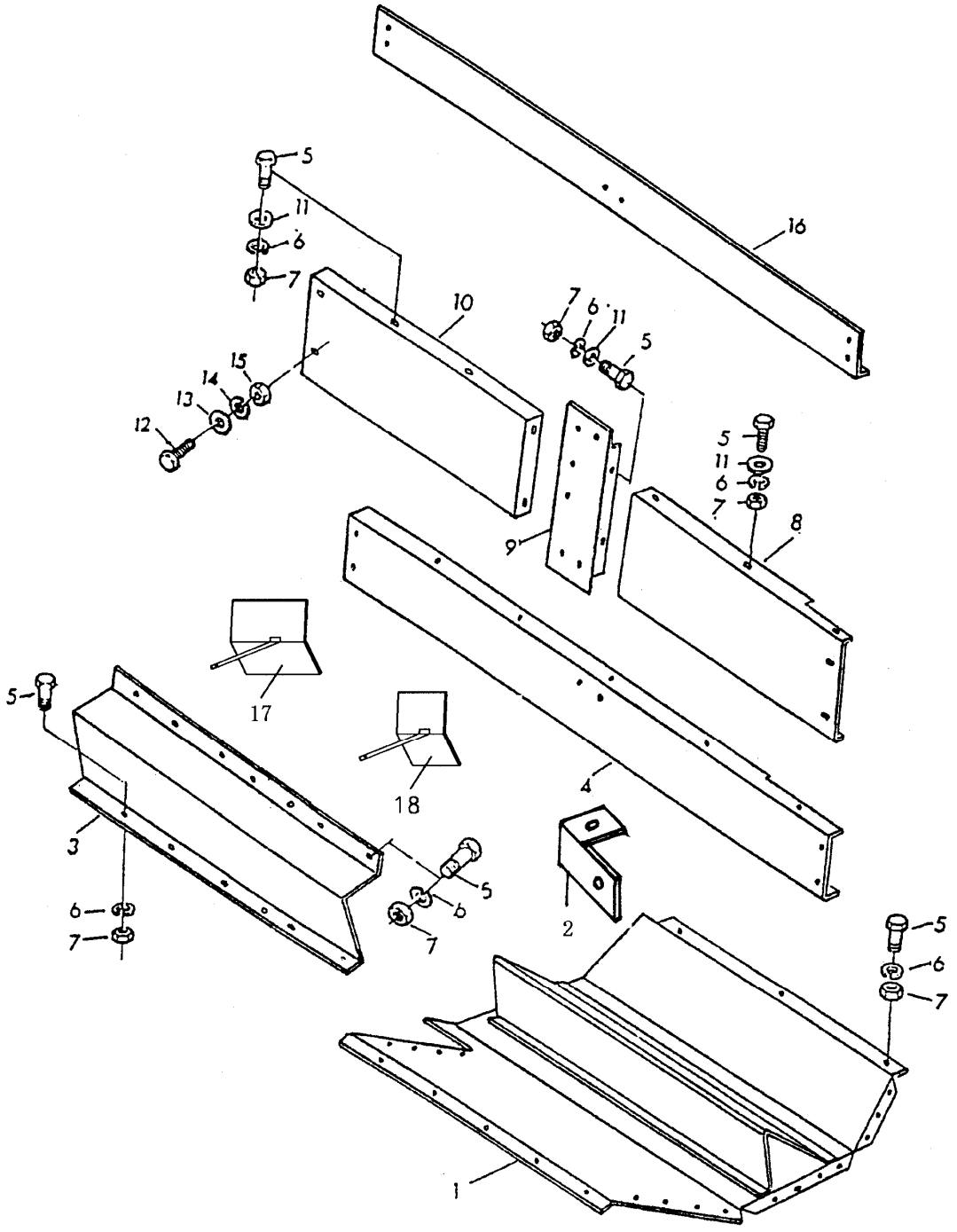

序号	件　号			数量		MODELS	备　　注
						3	
						0	
						7	
KEY	PART NO.	名　　称	DESCRIPTION	QTY	SERIAL NO.	0	REMARKS
1	AYC10262	底板焊合	PLATE	1		×	
2	YC10930	支架	BRACKET	1		×	
3	AYC10263	封闭板	GASKET	1		×	
4	YC11005	下横梁	REINFORCEMENT	1		×	
5	19G08416	螺栓	CAP SCREW	AR		×	M8X16 GB5783-86 8.8Zn.D
6	12G45008	弹垫	LOCK WASHER	AR		×	8 GB93-87 Zn.D
7	14G00082	螺母	NUT	AR		×	M8 GB6170-86 8 Zn.D
8	YC10924	左后档板	PLATE	1		×	
9	YC10934	立梁	REINFORCEMENT	1		×	
10	YC10927	右后档板	PLATE	1		×	
11	24G00008	垫圈	WASHER	AR		×	8 GB97-85 Zn.D
12	19G08525	螺栓	CAP SCREW	3		×	M10X25 GB5783-86 8.8Zn.D
13	24G00010	垫圈	WASHER	3		×	10 GB97.1-86 Zn.D
14	12G45010	弹垫	LOCK WASHER	3		×	10 GB93-87 Zn.D
15	14G00102	螺母	NUT	3		×	M10 GB6170-86 8 Zn.D
16	YC10926	上横梁	REINFORCEMENT	1		×	
17	AYC10328	封堵板焊合	PLATE	1		×	
18	AYC10329	封堵板焊合	PLATE	1		×	

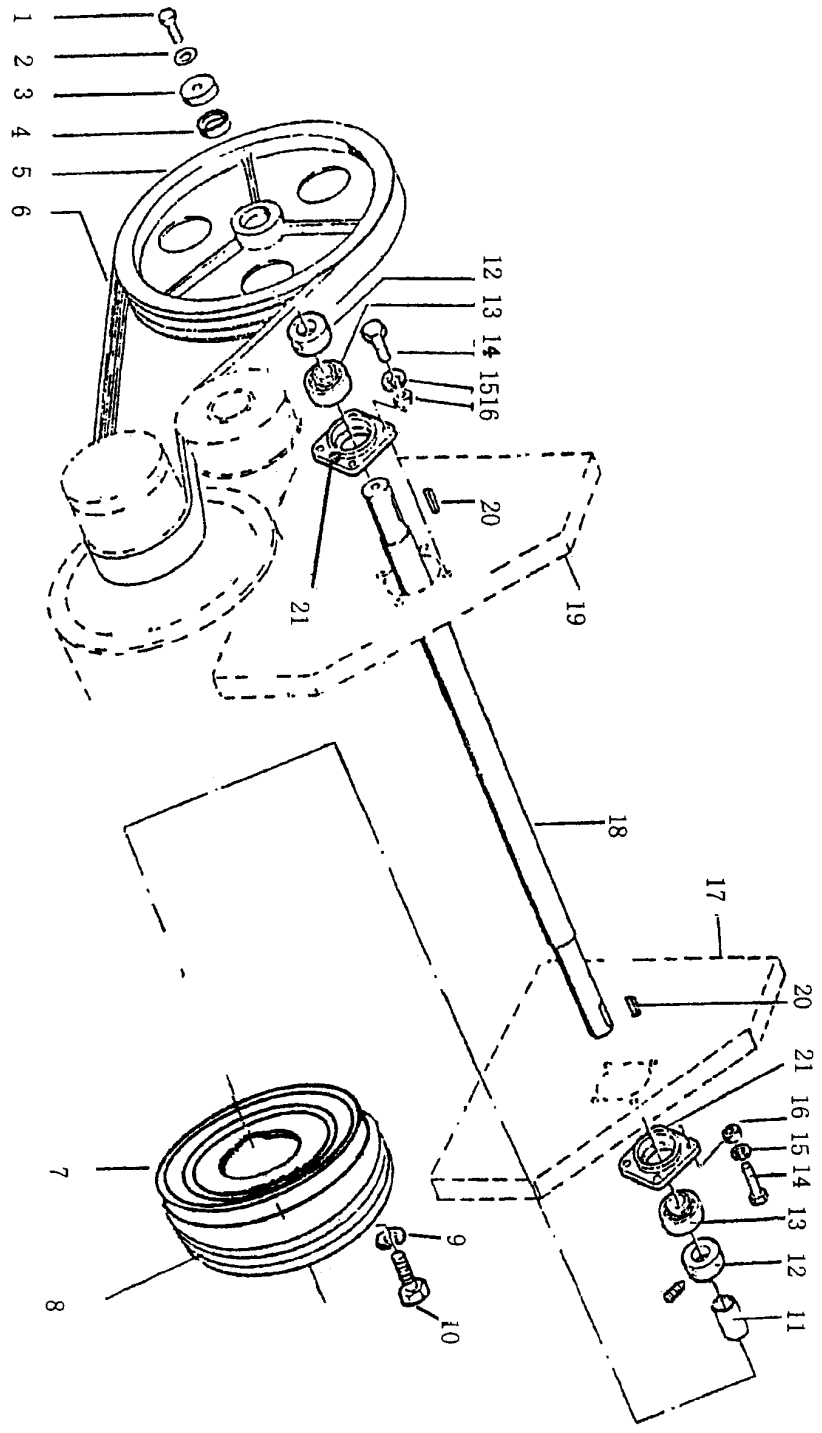
1
2
3
4
5
6
12
13
14
15
16
20
21
19
18
17
20
21
16
15
14
13
12
11
7
8
9
10

序号	件　　号			数量	MODELS	备　　注
					3	
					0	
					7	
KEY	PART NO.	名　　称	DESCRIPTION	QTY SERIAL NO.	0	REMARKS
1	19G08640	螺栓	CAP SCREW	1	×	M12X40 GB5783-86 Zn.D
2	12G45012	垫圈	WASHER	AR	×	12 GB93-87 Zn.D
3	D37411	挡圈	WASHER	1	×	
4	YC11460	垫圈	WASHER	3	×	41X55X1
	YC12136	垫圈	WASHER	3	×	42X57X3
5	D37109	皮带盘	SHEAVE	1	×	
6	YC17290	联组带	BELT	1	×	3HB2140
7	YC11435	皮带盘	SHEAVE	1	×	Φ162(单槽)
8	YC11438	皮带盘	SHEAVE	1	×	
9	12G45008	垫圈	WASHER	6	×	8 GB93-87Zn.D
10	19G08425	螺栓	CAP SCREW	6	×	M8X25 GB5783-86 8.8Zn.D
11	YC11557	间管	PLATE	1	×	
12	00GP508	偏心套	ECCENTRIC LOCKING	2	×	GB3882-87
13	00G390208	轴承	BALL BEARING	2	×	GB3882-87
14	19G08630	螺栓	CAP SCREW	AR	×	M12X30 GB5783-86 8.8Zn.D
15	12G45012	垫圈	WASHER	8	×	12 GB93-87 Zn.D
16	14G00122	螺母	NUT	8	×	M12 GB6170-86 8Zn.D
17	YC14740	支撑板	HOLDER	1	×	
18	YC11535	轴	SHAFT	1	×	
19	YC14741	支撑板	HOLDER	1	×	
20	49G00750	键	SHAFT KEY	2	×	12X50 1096
21	D24101	轴承座	QUILT	2	×	

DRIVE CLUTCH
主传动离合器

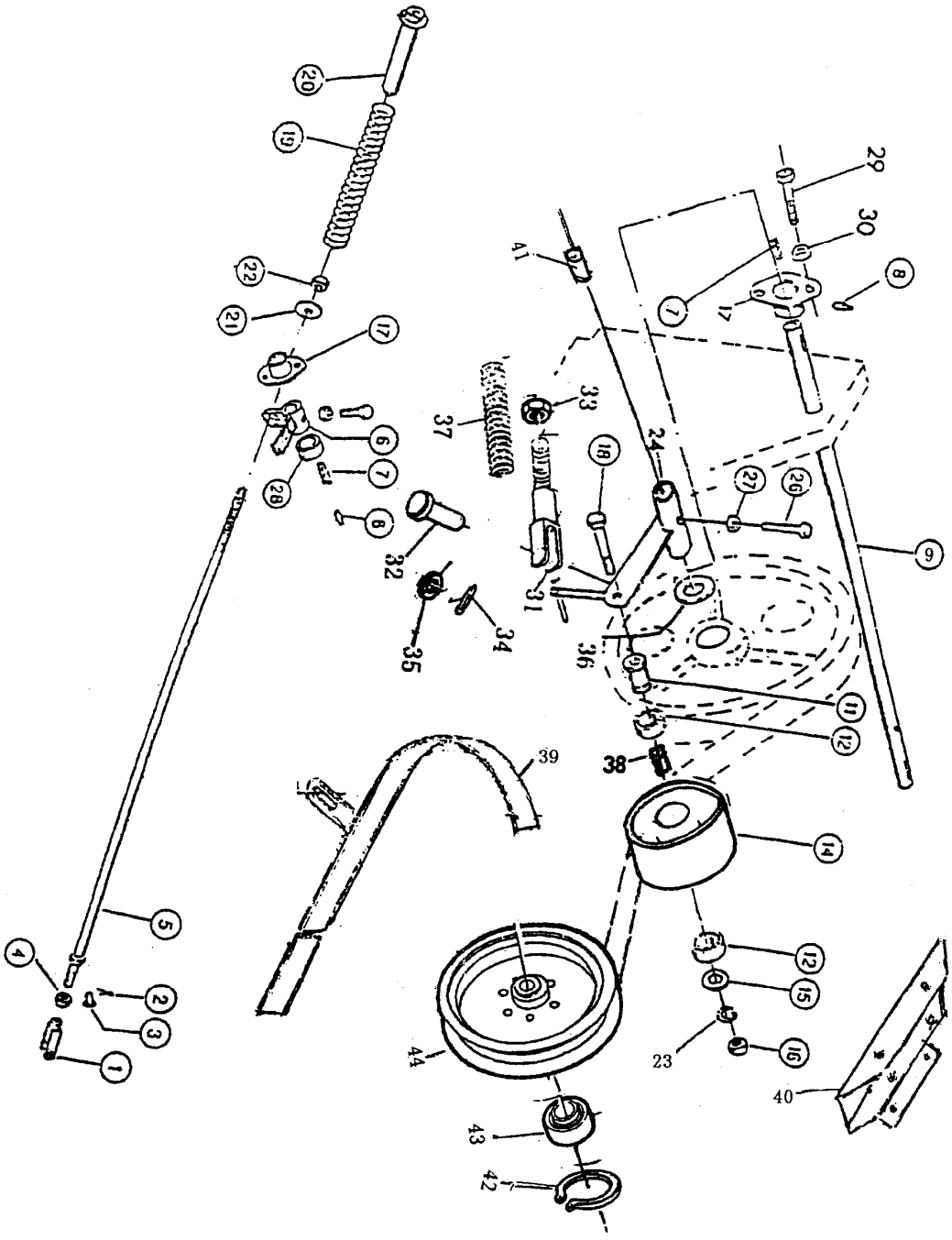

序号 KEY	件　号 PART NO.	名　　称	DESCRIPTION	数量 QTY	SERIAL NO.	MODELS 3 0 7 0	备　　注 REMARKS
1	YC11771	连接叉	YOKE	2		×	
2	11G01930	开口销	COTTER PIN	1		×	3X30 GB91-86Zn .D
3	YC11776	销轴	PIN	1		×	
5	YC11546	拉杆	ROD	1		×	脱谷拉杆
	D37617	卸粮拉杆	ROD	1		×	卸粮转臂 2003 年以前产品
6	AYC10453	脱谷转臂	RUNNING ARM	1		×	
7	49G00540	键	KEY	2		×	键 8X40 GB1096-79
8	58G30613	油杯 45°	LUBRICATION FITTING	3		×	M6X1 GB1153-79
9	YC11544	操纵轴	SHAFT	1		×	
11	YC11539	轴套	SPACER	1		×	
12	00G160206	轴承	BALL BEARING	2		×	GB279-88
14	YC11425	张紧轮	IDLER	1		×	
15	D37406	垫圈	WASHER	1		×	
16	14G00162	螺母	NUT	1		×	M16 GB1670-86 8Zn .D
17	YC11430	支座	LEVER	2		×	
18	03G44754	螺栓	CAP SCREW	1		×	M16X90 GB801-88 8.8Zn.D
19	YC11536	弹簧	SPRING	1		×	
20	AYC10433	导套	SLEEVE	1		×	
21	YC11458	垫圈	WASHER	1		×	
22	14G00122	螺母	NUT	1		×	M12 GB6170-86 8Zn.D
23	12G45016	垫圈	ILOCK WASHER	1		×	M16 GB93-86 Zn.D
24	AYC10452	支架	HOLDER	1		×	
29	19G08425	螺栓	CAP SCREW	AR		×	M8X25 GB5783-86 8.8Zn.D
30	14G00082	螺母	NUT	AR		×	M8 GB6170-86 8Zn.D
31	AYC10454	拉杆焊合	ROD	1		×	
32	45G01030	销轴	PIN	1		×	10X30 GB882-86
33	14G25122	螺母	NUT	1		×	M12 GB889-86 Zn.D8
34	11G01716	销	PIN	1		×	3X16 GB91-86 Zn.D
35	24G00010	垫圈	WASHER	1		×	10 GB97.1-85 Zn.D
36	YC10331	垫圈	WASHER	1		×	13.5X32X6
37	Z40936	压簧	SPRING	1		×	
38	YC12478	间管	SPACER	1		×	
39	AYC10450	下托板	PLATE	1		×	
40	AYC10451	上托板	PLATE	1		×	
41	YC11423	尼龙套	IDLER	1		×	
42	40G00040	挡圈	WASHER	1		×	40 GB893.1(属于 AS34773)
43	00G180203	轴承	BELT	1		×	GB279(属于 AS34773)
44	AYC11096	张紧轮	IDLER	1		×	卸粮用

LEFT TIGHTEN MECHANISM
左侧中间轴传动张紧机构

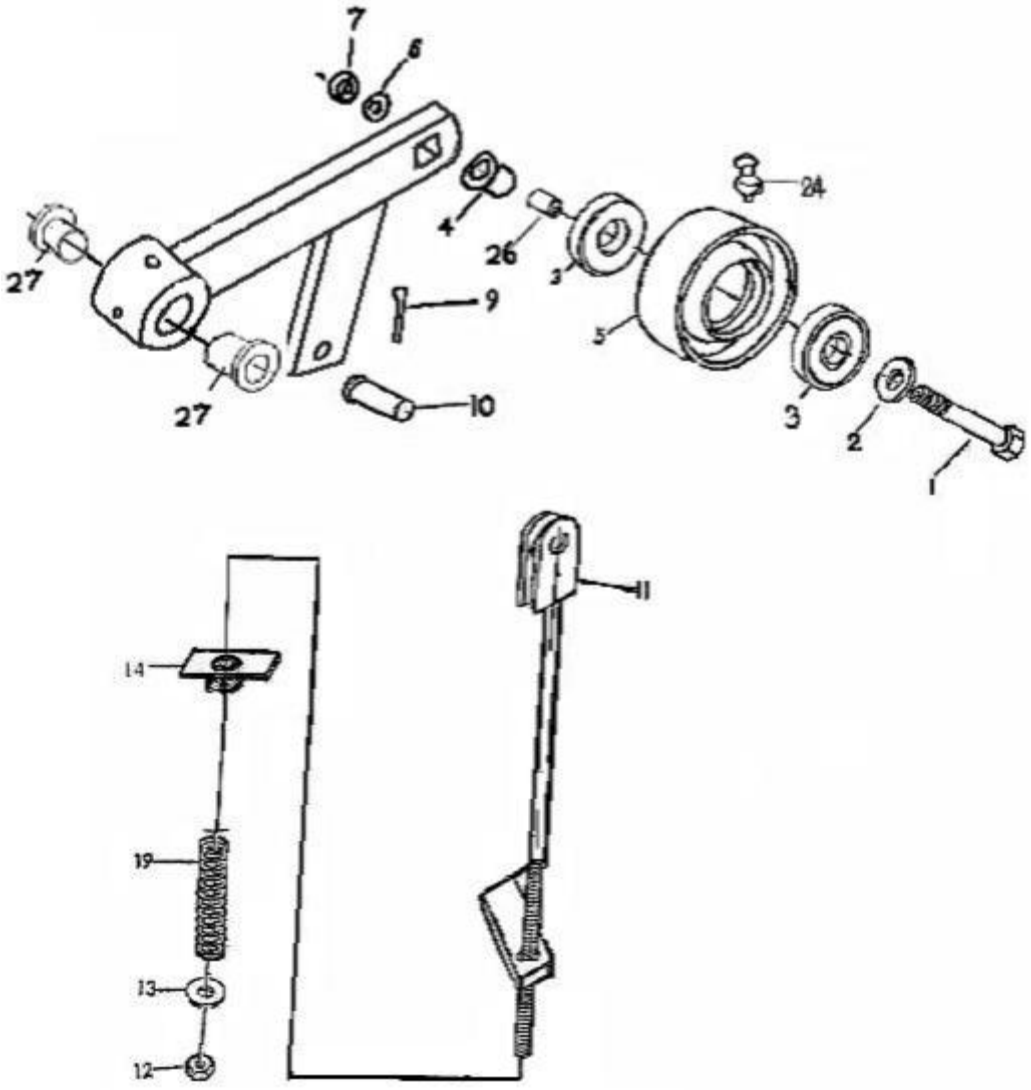

序号	件号			数量		MODELS 330700W	MODELS 330700W	备注
KEY	PART NO.	名称	DESCRIPTION	QTY	SERIAL NO.	L	Y	REMARKS
1	03G44754	螺栓	CAP SCREW	1		×	×	M16x90 GB801-88 8.8 Zn.D
2	24G20016	垫圈	WASHER	1		×	×	16 GB848-85 Zn.D
3	00G160206	轴承	BEARING	2		×	×	GB278
4	YC11539	轴套	BUSHING	1		×	×	
5	YC11425	张紧轮	IDLER	1		×	×	
6	12G45016	垫圈	LOCK WASHER	1		×	×	16 GB93-87 Zn.D
7	14G00162	螺母	CAP SCREW	1		×	×	M16 GB6170-86 8 Zn.D
8	AYC10455	支臂	LEVER	1		×	×	
9	11G01716	开口销	COTTER PIN	1		×	×	3x16 GB91-86 Zn.D
10	45G01030	销轴	PIN	1		×	×	10x30 GB882-86
11	AYC10454	拉杆	ROD	1		×	×	
12	14G25122	螺母	NUT	1		×	×	M12 GB889-86 8 Zn.D
13	D37640	球面垫圈	WASHER	1		×	×	
14	AYC10462	加强板焊合	SUPPORT	1		×	×	
19	Z40936	弹簧	SPRING	1		×	×	
21	D37640	垫圈	WASHER	1		×	×	
24	58G30613	油嘴	LUBRICATION FITTING	1		×	×	45° M6x1.00 GB1153-79
26	YC12478	间管	SPACER	1		×	×	
27	YC11433	间管	SPACER	1		×	×	

FAN HOUSING
风扇壳

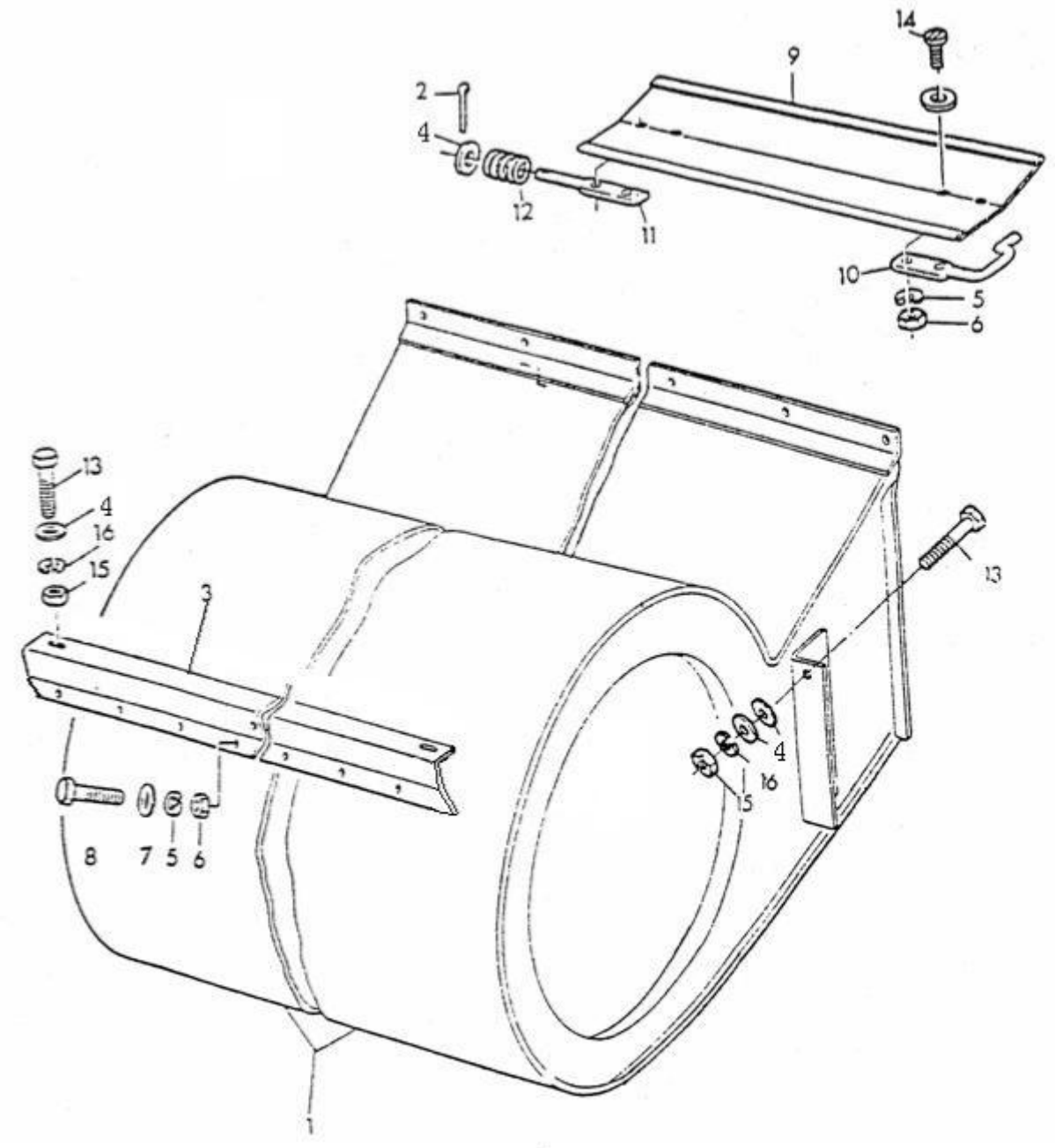

序号	件　号			数量		MODELS	备　　注
						3	
						0	
						7	
KEY	PART NO.	名　　称	DESCRIPTION	QTY	SERIALNO.	0	REMARKS
1	AYC10358	壳体	HOUSING	1		×	
2	11G01714	开口销	COTTER PIN	1		×	3X14 GB91-86-ZN
3	YC11115	支座	HOLDER	1		×	
4	24G00010	垫圈	WASHER	7		×	10 GB97-85 Zn.D
5	12G45006	弹垫	LOCK WASHER	12		×	6 GB93-87 Zn.D
6	14G00062	螺母	NUT	8		×	M6 GB6170-86 8 Zn.D
7	24G00006	垫圈	WASHER	8		×	6 GB97-85 Zn.D
8	19G02130	螺栓	CAP SCREW	4		×	M6X30 GB5782-86 8.8Zn.D
9	YC11108	导风板	DEFLECTOR	1		×	
10	Z20154	调节板	CRIP	1		×	
11	Z27520	轴	SHAFT	1		×	
12	L20507	弹簧	SPRING	1		×	
13	19G08525	螺栓	CAP SCREW	2		×	M10X25 GB5782-86 8.8Zn.D
14	21G08416	螺钉	SCREW	4		×	M6X16 GB67-85 8.8Zn.D
15	14G00102	螺母	NUT	4		×	M10 GB6170-86 8 Zn.D
16	12G45010	弹垫	LOCK WASHER	4		×	10 GB93-87 Zn.D
						×	

FAN WITH SHAFT AND DEFLECTORS
风扇

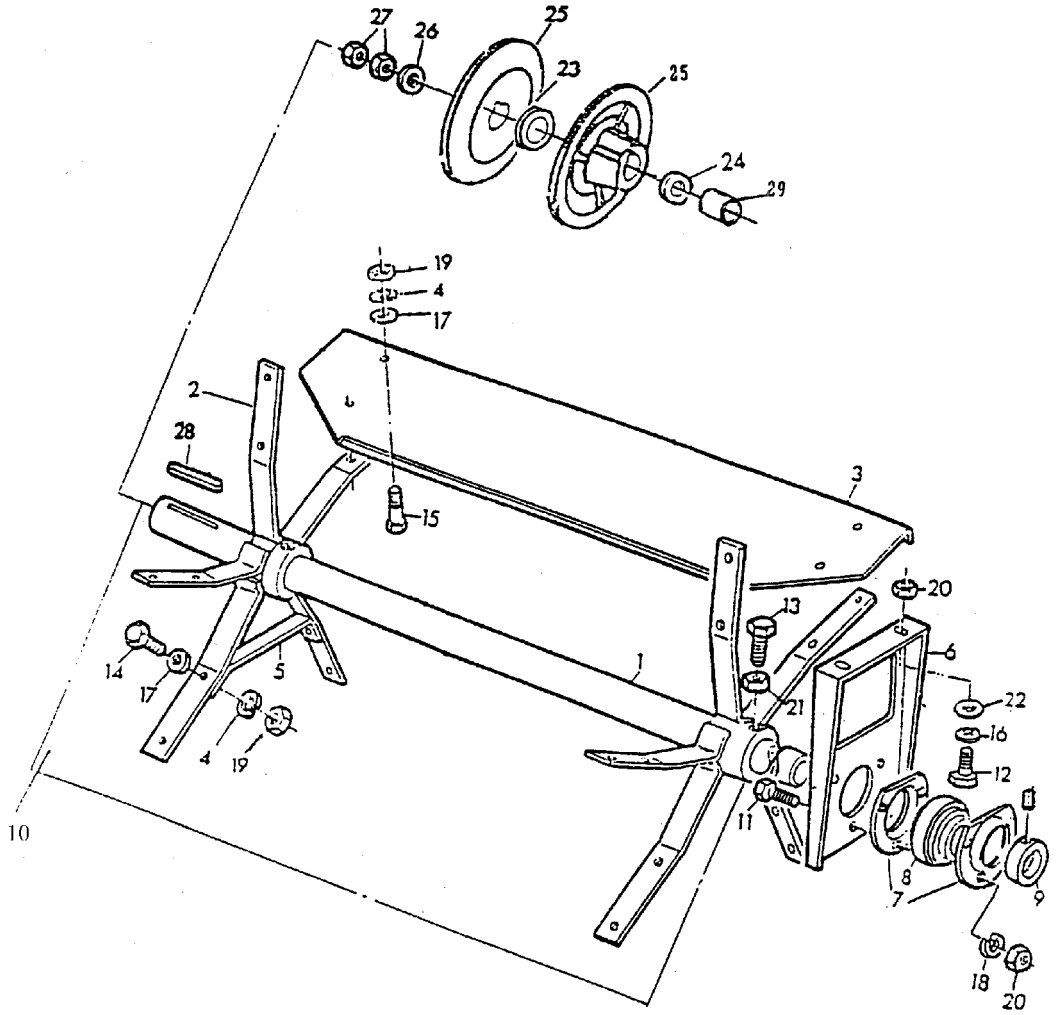

序号	件　号			数量		MODELS	备　注
						3	
						0	
						7	
KEY	PART NO.	名　称	DESCRIPTION	QTY	SERIALNO.	0	REMARKS
1	YC11118	轴	SHAFT	1		×	
2	AYC10360	风扇幅条	ARM	2		×	
3	YC11114	叶片	SHEET	5		×	
4	12G45006	弹垫	LOCK WASHER	20		×	6 GB93-87 Zn.D
5	YC11116	加强筋	BRACE	10		×	
6	YC11112	支架	HOLDER	2		×	
7	P47232	轴承座	FLANGETTE	4		×	
8	00G390205	轴承	BALLBEARING	2		×	GB 3882-87
9	00GP505	偏心套	LOCKINGCOLLAR	2		×	GB 3882-87
10	AYC10359	风扇叶片装配	FAN ASSY	1		×	
11	03G24325	螺栓	CAPSCREW	6		×	M8X25 GB14-88 8.8Zn.D
12	19G08525	螺栓	CAPSCREW	4		×	M10X25 GB5783-86 8.8Zn.D
13	22G54535	螺栓	CAPSCREW	2		×	M10X35 GB86-88 8.8Zn.D
14	19G08325	螺栓	CAPSCREW	10		×	M6X25 GB5782-86 8.8Zn.D
15	19G08316	螺栓	CAPSCREW	10		×	M6X16 GB5782-86 8.8Zn.D
16	12G45010	弹垫	LOCK WASHER	4		×	10 GB93-87 Zn.D
17	24G00006	垫圈	WASHER	20		×	6 GB97.1-86 Zn.D
18	12G45008	弹垫	LOCK WASHER	6		×	8 GB93-87 Zn.D
19	14G00062	螺母	NUT	20		×	M6 GB6170-86 8 Zn.D
20	14G00082	螺母	NUT	6		×	M8 GB6170-86 8 Zn.D
21	14G02109	螺母	NUT	2		×	M10 GB6172-86 8 Zn.D
22	24G00010	垫圈	WASHER	4		×	10 GB97.1-86 Zn.D
23	24G20030	调整垫	WASHER	3		×	30 GB848-85
24	L19162	调整垫	WASHER SHEAVE	4		×	
25	YC11432	皮带盘	HALF SHEAVE	2		×	
26	24G00016	垫圈	WASHER	1		×	16 GB97.1-86 Zn.D
27	14G00162	螺母	NUT	2		×	M16 GB6170-86 8 Zn.D
28	49G00555	键	SHAFT KEY	1		×	
29	YC11120	间管	SPACER	1		×	

GRAIN PAN
承种盘

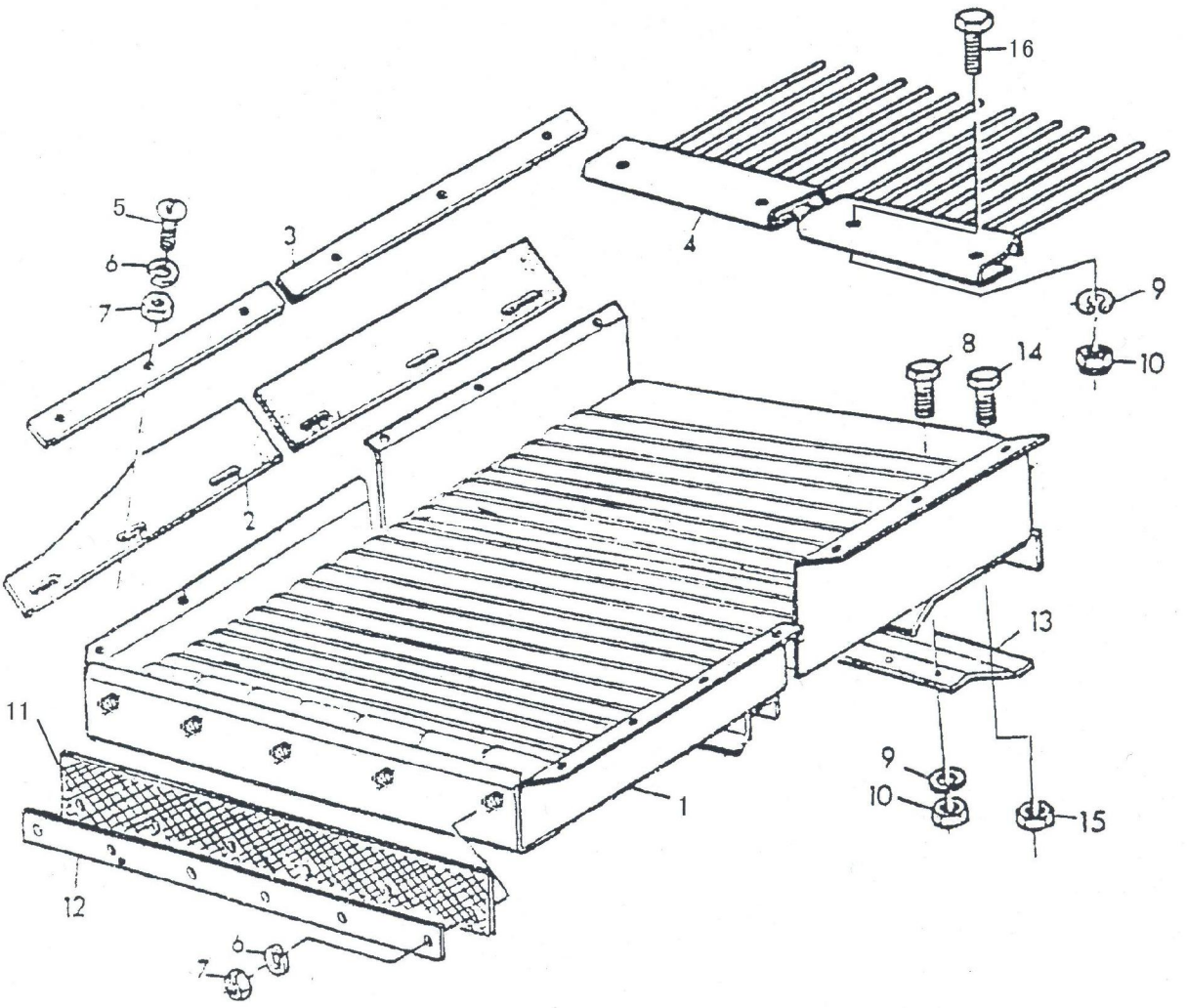

序号 KEY	件　号 PART NO.	名　　称	DESCRIPTION	数量 QTY	SERIAL NO.	MODELS 3 0 7 0	备　　注 REMARKS
1	AYC10330	承种盘	GRAIN PAN	1		×	
2	YC11009	密封板	GASKET	2		×	
3	YC11027	压条	REINFORCEMENT	2		×	
4	AYC10332	指状筛	EXTENSION	1		×	
5	21G08418	螺钉	SCREW	26		×	M6X18 GB67-85 Zn.D
6	12G45006	弹簧垫圈	LOCK WASHER	31		×	6 GB93-87 Zn.D
7	14G14060	螺母	NUT	31		×	M6 GB6170 Zn.D
8	19G08425	螺拴	CAP SCREW	5		×	M8x25 GB5783-86 8 Zn.D
9	12G45008	弹簧垫圈	LOCK WASHER	7		×	8 GB93-87 Zn.D
10	14G00082	螺母	NUT	7		×	M8 GB6170-86 8 Zn.D
11	YC11010	密封板	GASKET	1		×	
12	YC11030	压条	REINFORCEMENT	1		×	
13	YC11029	加强板	REINFORCEMENT	1		×	
14	19G02448	螺栓	CAP SCREW	4		×	M12x60 GB5782-86 8.8 Zn.D
15	14G25122	螺母	NUT	4		×	M12 GB889-86 8 Zn.D
16	19G08420	螺栓	CAP SCREW	2		×	M8x20 GB5783-86 8.8 Zn.D

LOWER CHAFFER BOARD
篩箱

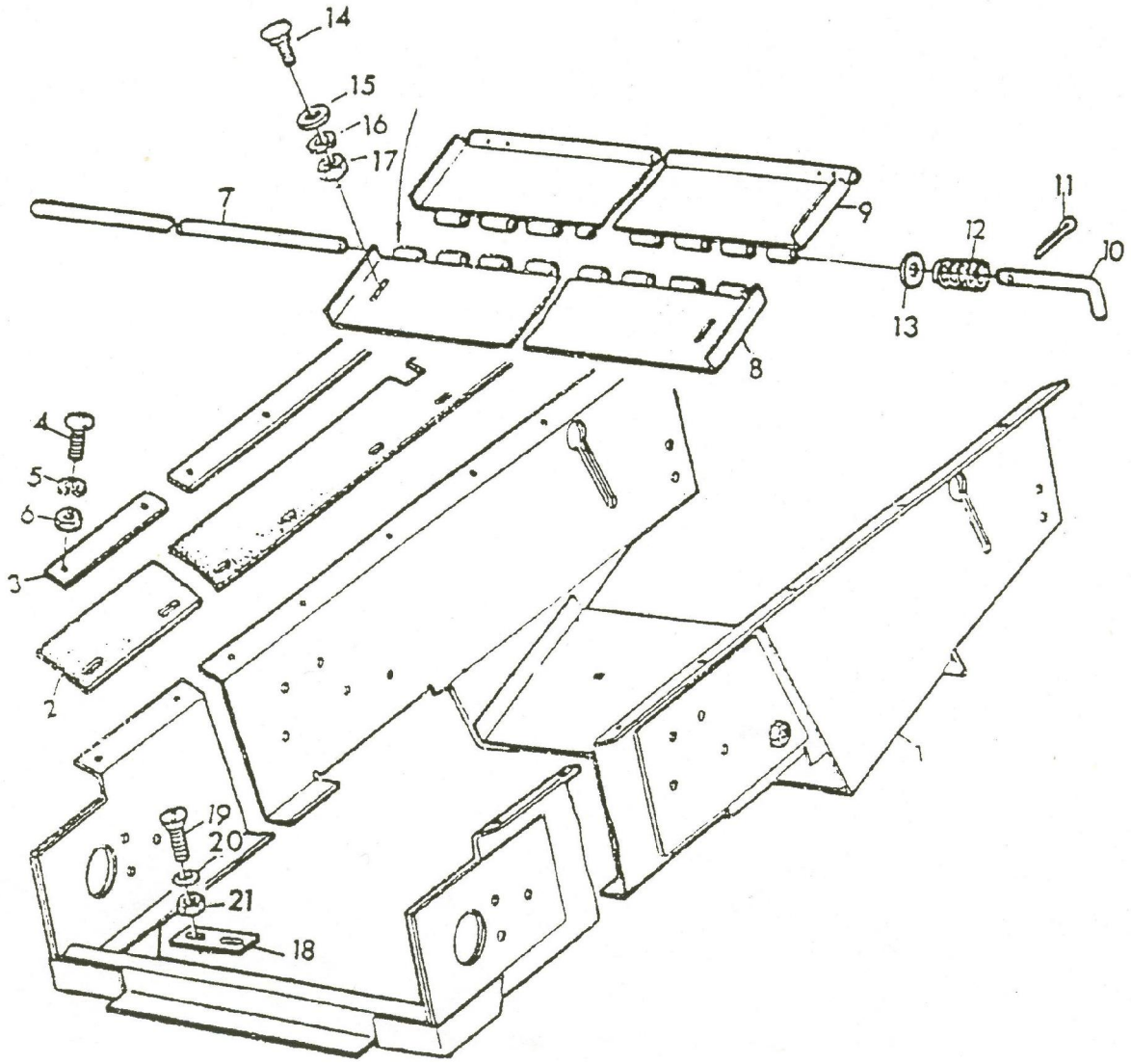

序号	件号			数量	MODELS	备注
					3 0 7	
KEY	PART NO.	名称	DESCRIPTION	QTY SERIAL NO.	0	REMARKS
1	AYC10333	上筛箱	CHAFFER BOARD	1	×	
2	YC11012	密封板	GASKET	2	×	
3	YC11064	压条	REINFORCEMENT	2	×	
4	21G08418	螺钉	SCREW	24	×	M6X18 GB67-85 Zn.D
5	12G45006	弹簧垫圈	LOCK WASHER	24	×	6 GB93-87 Zn.D
6	14G14060	螺母	NUT	24	×	M6 GB6170 Zn.D
7	YC11094	销轴	PIN	1	×	
8	AYC10337	滑板	EXTENSION	1	×	
9	AYC10338	滑板	EXTENSION	1	×	
10	Z36530	插销	PIN	2	×	
11	11G01720	开口销	COTTER PIN	2	×	3X20 GB91-86 Zn.D
12	Z20127	压簧	SPRING	2	×	
13	24G20012	垫圈	WASHER	2	×	12 GB848-85 Zn.D
14	03G24325	螺栓	CAP SCREW	2	×	M8X25 GB14-88 8.8 Zn.D
15	24G00008	垫圈	WASHER	2	×	8 GB97.1-85 Zn.D
16	12G45008	弹簧垫圈	LOCK WASHER	2	×	8 GB93-87 Zn.D
17	14G00082	螺母	NUT	2	×	M8 GB6170-86 8 Zn.D
18	Z39723	筛箱导板	PLATE	2	×	
19	21G40316	螺钉	SCREW	4	×	M5X16 GB67-85 Zn.D
20	12G45005	弹簧垫圈	LOCK WASHER	4	×	5 GB93-87 Zn.D
21	14G14050	螺母	NUT	4	×	M5 GB41-86 5 Zn.D

RETURN PAN WTTH SIEVES
籽粒筛与滑板

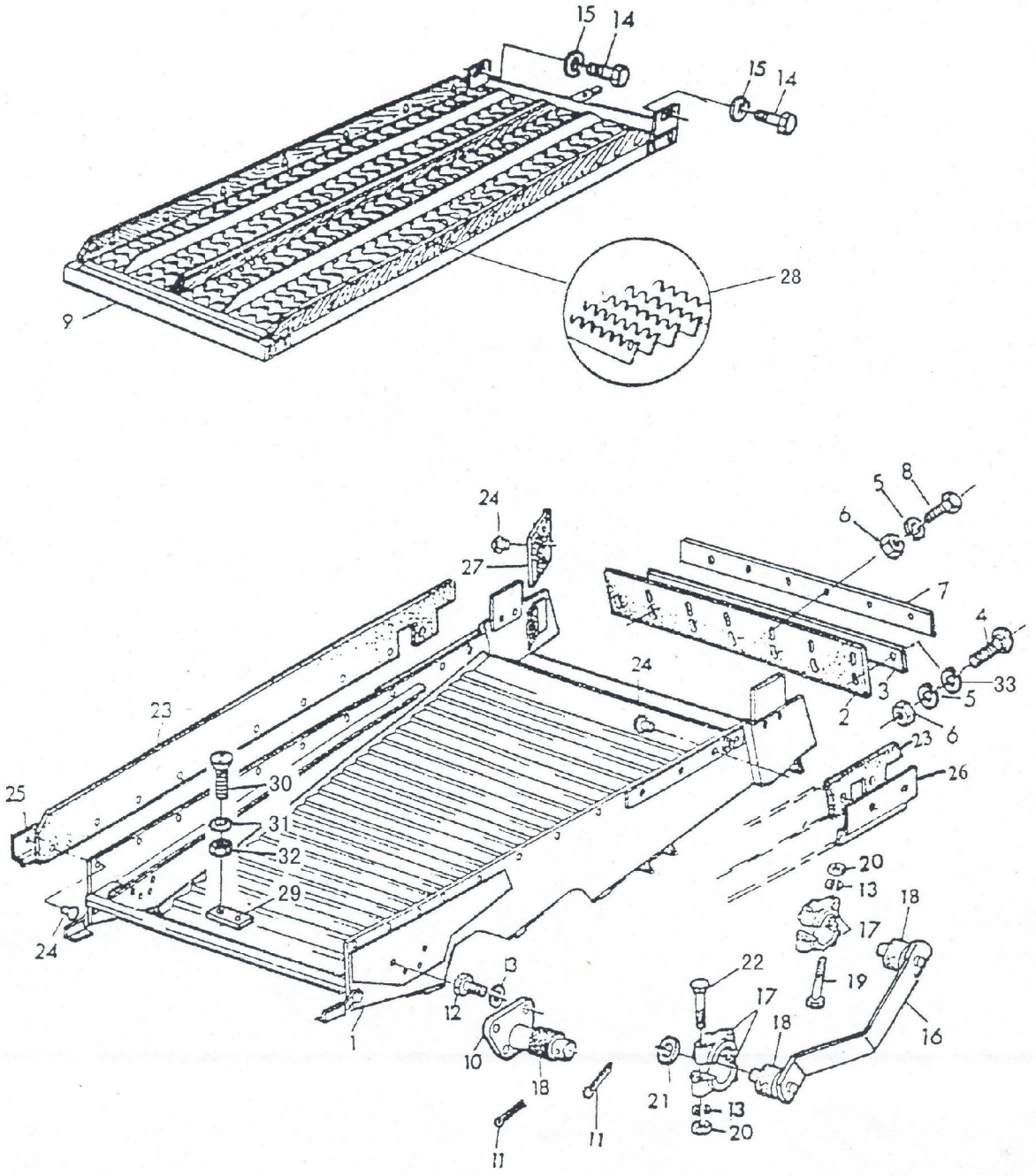

序号	件　号			数量		MODELS	备　注
						3	
						0	
						7	
KEY	PART NO.	名　称	DESCRIPTION	QTY	SERIAL NO.	0	REMARKS
1	AYC10335	下筛箱焊合	CHAFFER BOARD	1		×	
2	YC11013	密封板	GASKET	1		×	
3	YC11081	压条	REINFORCEMENT	1		×	
4	21G08418	螺钉	SCREW	5		×	M6X18 GB67-85 Zn.D
5	12G45006	弹簧垫圈	LOCKWASHER	10		×	6 GB93-87 Zn.D
6	14G14060	螺母	NUT	10		×	M6 GB6170 Zn.D
7	YC11072	压条	REINFORCEMENT	1		×	
8	19G52116	螺拴	CAPSCREW	5		×	M6x16 GB5781-86 8 Zn.D
9	AYC10344	下筛	SIEVE	1		×	
10	AZ19242	筛箱吊挂轴	SHAFT	2		×	单件号 Z10721
11	11G02026	开口销	COTTER PIN	2		×	GB91-86 Zn.D
12	19G08420	螺拴	CAPSCREW	8		×	M8x20 GB5783-86 8 Zn.D
13	12G45008	弹簧垫圈	LOCKWASHER	16		×	8 GB93-87 Zn.D
14	19G08525	螺拴	CAPSCREW	2		×	M10x25 GB5783-86 8 Zn.D
15	12G45010	弹簧垫圈	LOCKWASHER	2		×	10 GB93-87 Zn.D
16	AYC10346	后吊杆装配	HANGER	2		×	吊杆焊合 AYC10352
17	PK1103H	轴座	BEARING	8		×	
18	P42100	胶套	RUBBER MOUNT	6		×	
19	19G02250	螺拴	CAPSCREW	4		×	M8x70 GB5782　8.8 Zn.D
20	14G00082	螺母	NUT	8		×	M8 GB6170-86 8 Zn.D
21	24G00016	垫圈	WASHER	4		×	16 GB97.1-85 Zn.D
22	03G24349	螺拴	CAPSCREW	4		×	M8x65 GB14-88　8.8 Zn.D
23	YC11011	密封板	GASKET	2		×	
24	16G30618	铆钉	RIVET	AR		×	6X18 GB869
25	YC11042	右压条	REINFORCEMENT	1		×	
26	YC11049	左压条	REINFORCEMENT	1		×	
27	Z34309	密封板	GASKET	2		×	
28	AYC12511	筛片	SIENE	AR		×	
29	Z39723	筛箱导板	PLATE	2		×	
30	21G40316	螺钉	SCREW	4		×	M5X16 GB67-85 Zn.D
31	12G45005	弹簧垫圈	LOCKWASHER	4		×	5 GB93-87 Zn.D
32	14G14050	螺母	NUT	4		×	M5 GB41-86 5 Zn.D
33	24G00006	垫圈	WASHER	5		×	6 GB97.1-85 Zn.D

CHAFFER
穎殼篩

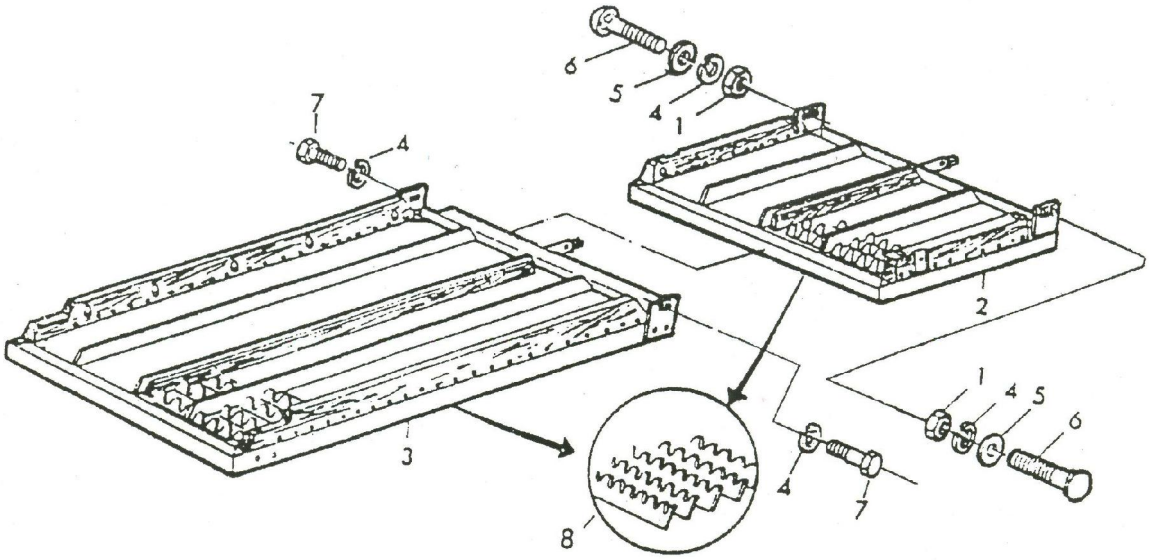

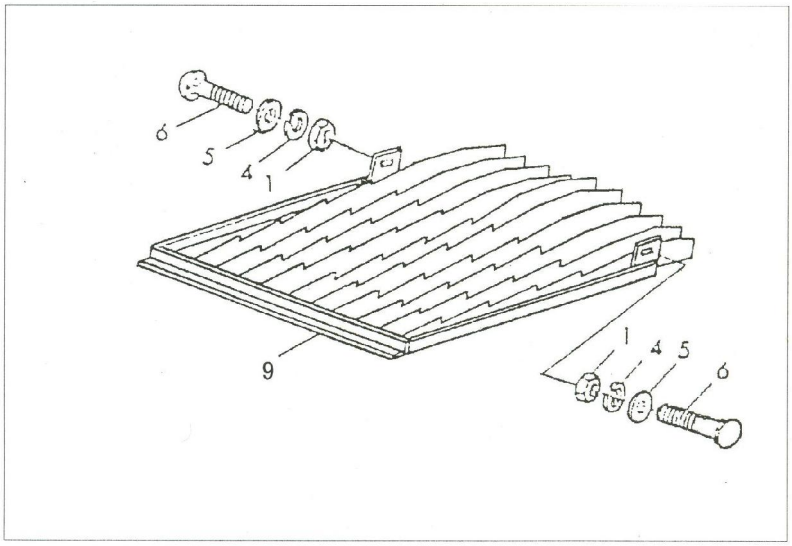

序号	件　号			数量		MODELS	备　注
						3	
						0	
						7	
KEY	PART NO.	名　称	DESCRIPTION	QTY	SERIAL NO.	0	REMARKS
1	14G00102	螺母	NUT	2		×	M10 GB6170-86 8 Zn.D
2	AYC10345	延长筛	EXTENSION	1		×	
3	AYC10343	上筛	CHAFFER	1		×	
4	12G45010	弹簧垫圈	LOCK WASHER	4		×	10 GB93-87 Zn.D
5	24G00010	垫圈	WASHER	2		×	10 GB97.1-85 Zn.D
6	03G24425	螺栓	SCREW	2		×	M10x25 GB14-88 8.8 Zn.D
7	19G08525	螺栓	CAP SCREW	2		×	M10x25 GB5783-86 8.8 Zn.D
8	AYC12508	筛片	SIEVE	AR		×	
9	AD26-33	延长筛	EXTENSION	1		×	

CLEANING SHOE SUSPENSION
筛箱支杆

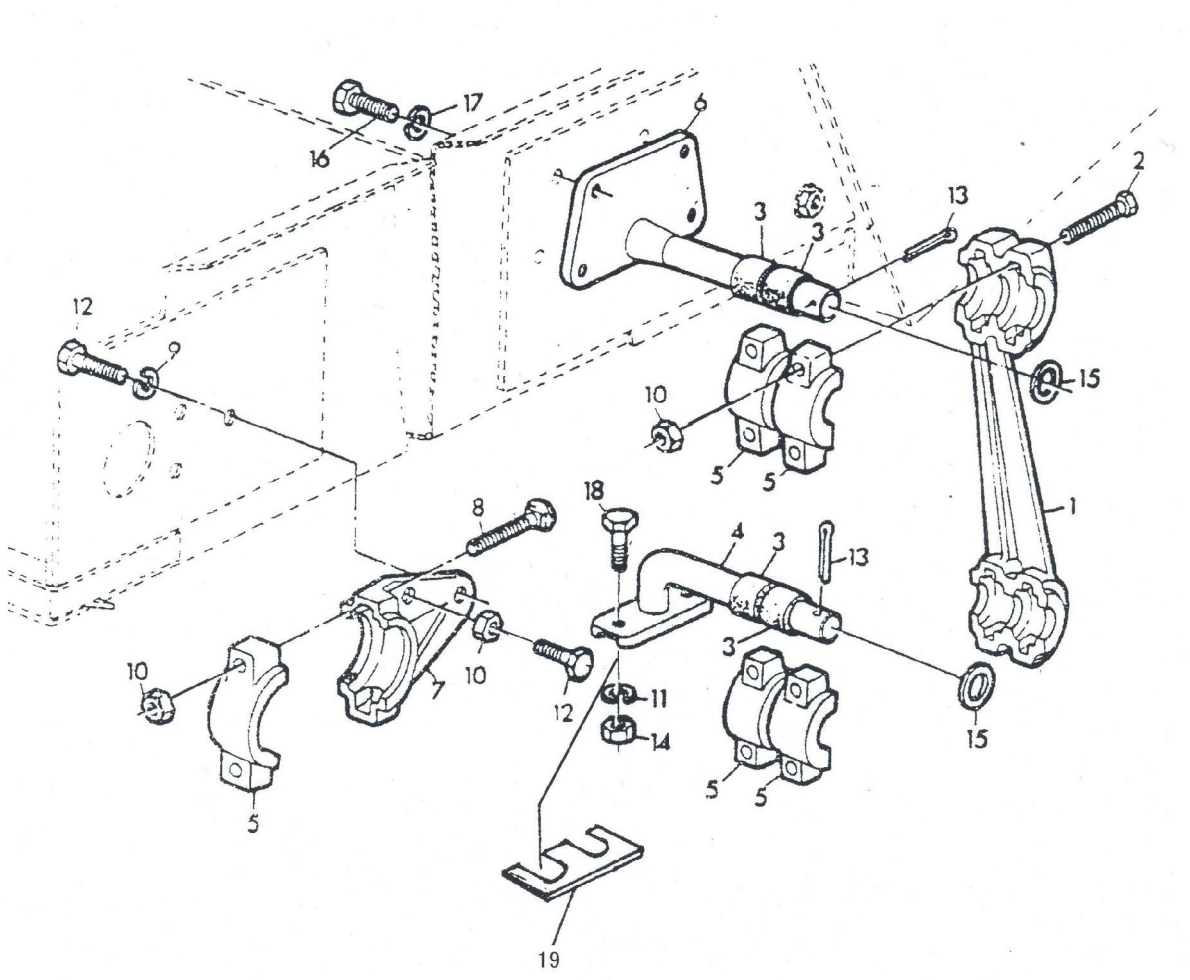

序号 KEY	件　号 PART NO.	名　　称	DESCRIPTION	数量 QTY	SERIAL NO.	MODELS 3 0 7 0	备　　注 REMARKS
1	Z10914	支杆	HANGER	2		×	
2	19G02348	螺拴	CAPSCREW	16		×	M10x60 GB5782 8.8 Zn.D
3	P49545	胶套	RUBBER MOUNT	8		×	
4	AZ23183	轴	SHAFT	2		×	单件 Z10912 胶套 P49545
5	PK1931H	轴套	BEARING	10		×	
6	AZ23184	轴	SHAFT	2		×	单件 Z10913 胶套 P49545
7	Z10008	轴座	HANGER	2		×	
8	03G44448	螺拴	SCREW	4		×	M10x60 GB12-88 8.8 Zn.D
9	12G45010	弹簧垫圈	LOCKWASHER	2		×	10 GB93-87 Zn.D
10	14G25102	螺母	NUT	24		×	M10 GB889-86 8 Zn.D
11	12G45012	弹簧垫圈	LOCKWASHER	4		×	12 GB93-87 Zn.D
12	19G08525	螺拴	CAPSCREW	6		×	M10x25 GB5783-86 8.8 Zn.D
13	11G02230	开口销	COTTER PIN	4		×	5X30 GB91 Zn.D
14	14G00122	螺母	NUT	4		×	M12 GB6170-86 8 Zn.D
15	24G35024	垫圈	WASHER	4		×	24 GB95 Zn.D
16	19G08420	螺拴	CAPSCREW	8		×	M8x20 GB5783-86 8 Zn.D
17	12G45008	弹簧垫圈	LOCKWASHER	8		×	8 GB93-87 Zn.D
18	19G08630	螺拴	CAPSCREW	4		×	M12x30 GB5783-86 8.8 Zn.D
19	YC11070	调整垫	WASHER	1		×	

GRAIN PAN SHAFT AND SUPPORT
承种盘传动轴

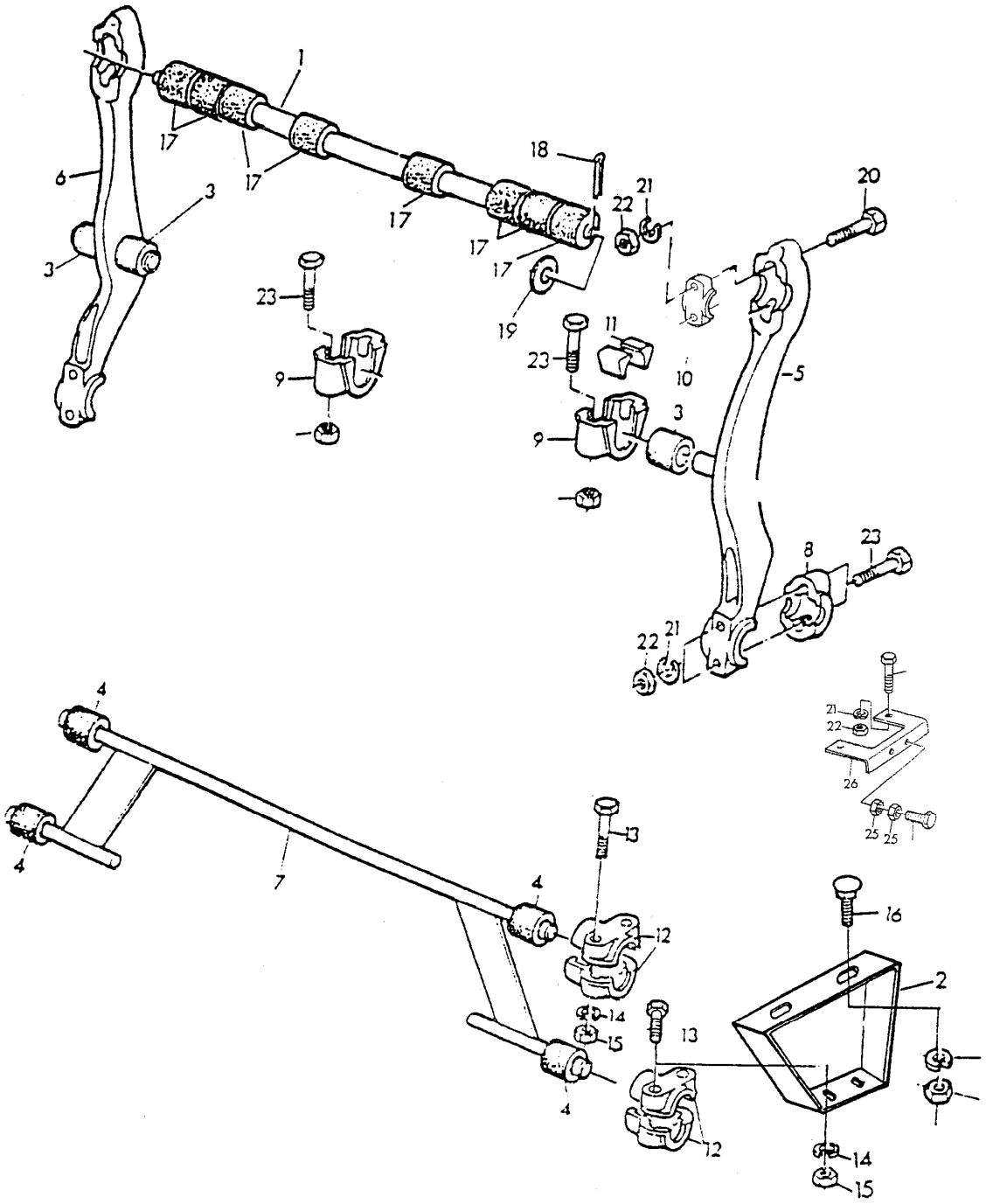

序号	件　号			数量		MODELS	备　　注
						3	
						0	
						7	
KEY	PART NO.	名　　称	DESCRIPTION	QTY	SERIAL NO.	0	REMARKS
1	AYC10356	吊挂轴	HAFT	1		×	INCL.17,轴单件号 YC11096
2	YC11082	左右支架	HOLDER	2		×	
3	P49545	胶套	RUBBER MOUNT	3		×	
4	P42100	胶套	RUBBER MOUNT	4		×	
5	AYC10342	左三叉臂	HANGER	1		×	单件号　YC11015
6	AYC10341	右三叉臂	HANGER	1		×	单件号　YC11014
7	AYC10339	阶梯板前支轴	SHAFT	1		×	焊合号　AYC10340
8	Z10639	轴座	BEARING	2		×	
9	Z10418	轴座	BEARING	5		×	
10	YC11020	胶套座	BEARING	2		×	
11	H10613	楔	WEDGE	12		×	
12	PK1103H	轴座	BEARING	8		×	
13	19G02250	螺拴	CAPSCREW	8		×	M8x70 GB5782　8.8 Zn.D
14	12G45008	弹簧垫圈	LOCKWASHER	12		×	8 GB93-87 Zn.D
15	14G00082	螺母	NUT	12		×	M8 GB6170-86 8 Zn.D
16	19G08525	螺栓	SCREW	4		×	M10x25 GB5783-86　8.8 Zn.D
17	Z37972	胶套	RUBBER MOUNT	8		×	
18	11G02236	开口销	COTTER PIN	2		×	5X36 GB91 Zn.D
19	YC11062	垫圈	WASHER	2		×	
20	19G02345	螺拴	CAPSCREW	4		×	M10x45 GB5782-86　8.8 Zn.D
21	12G45010	弹簧垫圈	LOCKWASHER	14		×	10 GB93-87 Zn.D
22	14G00102	螺母	NUT	14		×	M10 GB6170-86 8 Zn.D
23	19G02448	螺拴	CAPSCREW	14		×	M12x60 GB5782-86　8.8 Zn.D
24	14G25122	螺母	NUT	12		×	M12 GB889-86 8 Zn.D
25	14G02129	螺母	NUT	2		×	M12 GB6172-86 05 Zn.D
26	Z33258	支架	HOLDER	1		×	
27	19G08640	螺拴	CAPSCREW	1		×	M12x40 GB5782-86　8.8 Zn.D

SHOE CRANK AND PITMAN
筛箱曲柄连杆机构

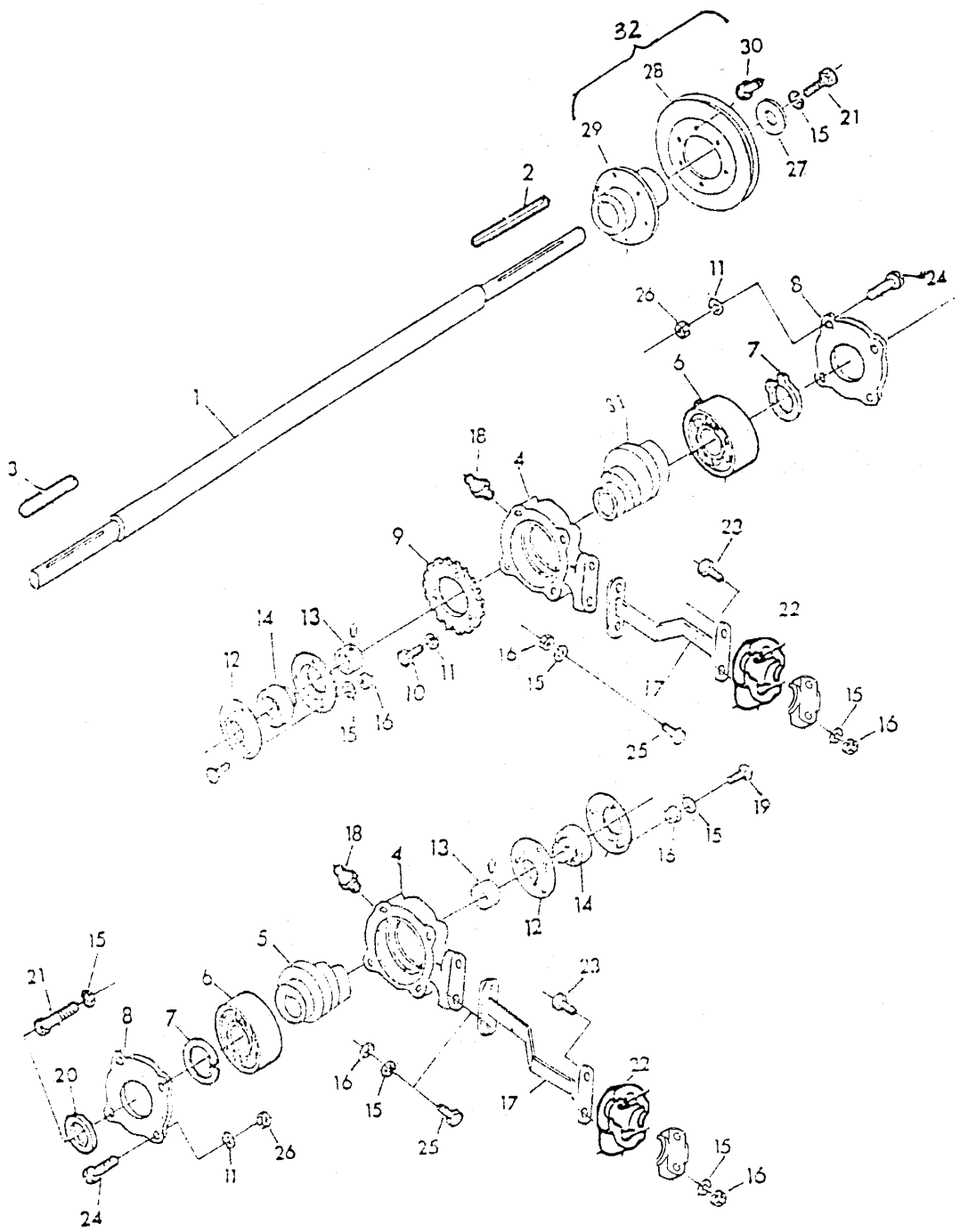

序号 KEY	件　号 PART NO.	名　称	DESCRIPTION	数量 QTY	SERIAL NO.	MODELS 3 0 7 0	备　注 REMARKS
1	YC11097	轴	SHAFT	1		×	
2	49G01560	键	SHAFT KEY	1		×	B8x90 GB1096-79
3	49G01550	键	SHAFT KEY	1		×	B8x90 GB1096-79
4	YC11017	连杆座	HOLDER	2		×	
5	YC11019	左偏心轮	LOCK WASHER	1		×	
6	00G117	轴承	BEARING	2		×	
7	40G02082	挡圈	SNAP RING	2		×	85 GB 893 Zn.D
8	YC11016	压盖	COVER	2		×	
9	YC11063	链轮	CHAIN SPROCKET	1		×	
10	19G08430	螺拴	CAP SCREW	3		×	M8x30 GB5783-86 8 Zn.D
11	12G45008	弹簧垫圈	LOCK WASHER	11		×	8 GB93-87 Zn.D
12	YC17265	轴承座	FLANGETTE	4		×	
13	00GP507	锁紧环	LOCKINGCOLLAR	2		×	GB3882-87
14	00G390207	球面轴承	BALL BEARING	2		×	GB3882-87
15	12G45010	弹簧垫圈	LOCK WASHER	16		×	10 GB93-87 Zn.D
16	14G00102	螺母	NUT	14		×	M10 GB6170-86 8 Zn.D
17	AYC10354	右连杆焊合	HOLDER	1		×	
	AYC10355	左连杆焊合	HOLDER	1		×	
18	58G21010	油杯	LUBRICATION FITTING	2		×	M10x1 GB1152-79 Zn.D
19	03G24425	螺栓	SCREW	6		×	M10x25 GB14-88 8.8 Zn.D
20	YC11461	挡圈	SNAP RING	2		×	
21	19G08530	螺拴	CAP SCREW	2		×	M10x30 GB5783-86 8 Zn.D
22	YC11020	胶套座	BEARING	2		×	
23	19G08520	螺拴	CAP SCREW	4		×	M10x20 GB5783-86 8 Zn.D
24	21G40546	螺钉	SCREW	8		×	M8X50 GB68-85 Zn.D
25	19G02340	螺拴	CAP SCREW	4		×	M10x40 GB5782 8.8 Zn.D
26	14G00082	螺母	NUT	8		×	M8 GB6170-86 8 Zn.D
27	YC11461	挡圈	SNAP RING	1		×	
28	YC11482	皮带盘	PULLEY	1		×	
	YC11483	皮带盘	PULLEY	1		×	
29	YC11426	轮毂	HUB	1		×	
30	16G00620	铆钉	RIVET	6		×	6x20 GB67-86
31	YC11018	右偏心轮	LOCK WASHER	1		×	
32	AYC10448	皮带盘	HALF SHEAVE	1		×	Φ＝330

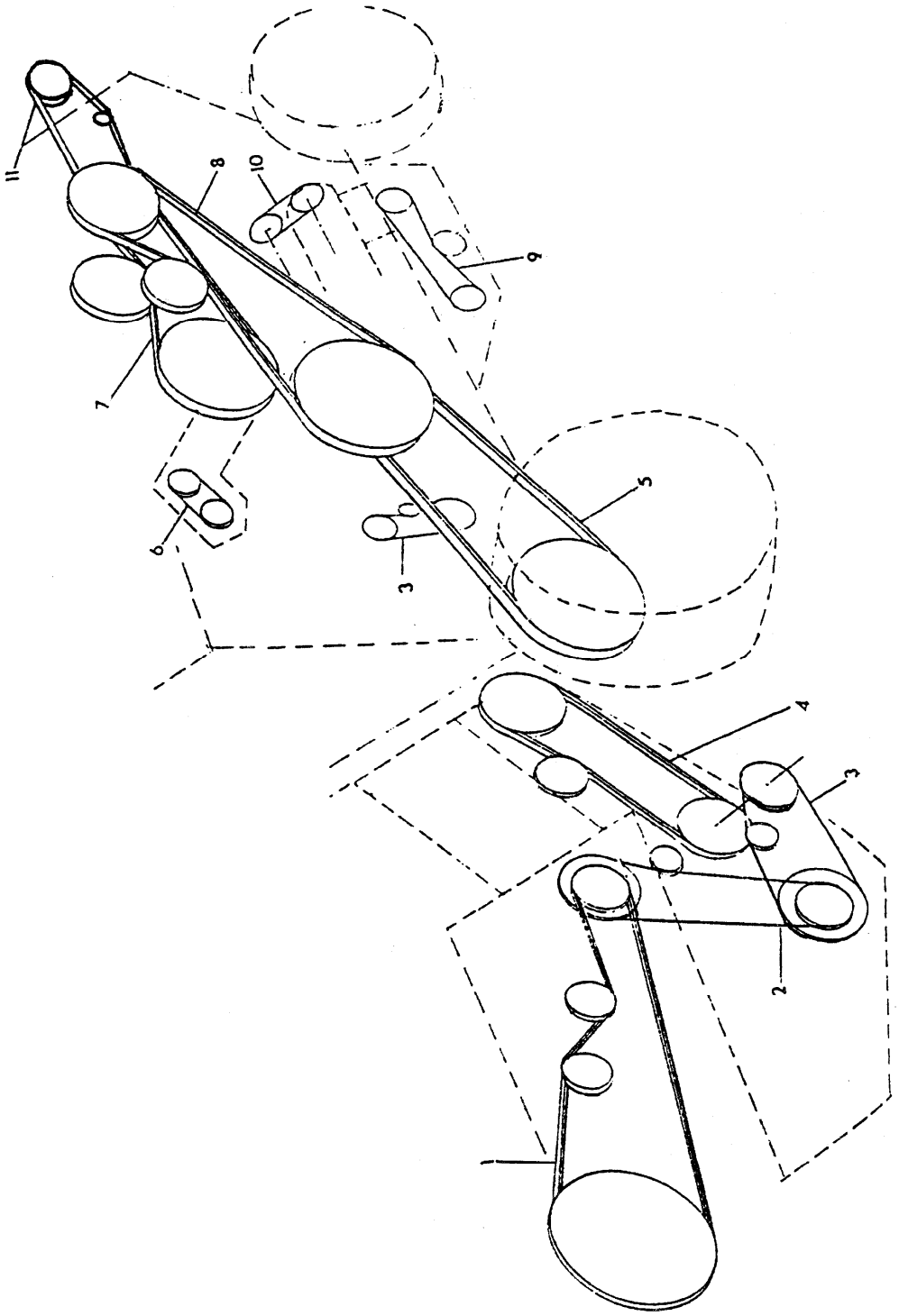
11
8
10
9
1
6
3
5
4
3
2

序号	件　号			数量		MODELS		备　　注
						3	3	
						0	0	
						7	7	
						0	0	
						W	W	
KEY	PART NO.	名　　称	DESCRIPTION	QTY	SERIAL NO.	L	Y	REMARKS
1	YC16311	拨禾轮皮带	BELT	1		×	×	HC 3535
2	AD16-04	链条	CHAIN	1		×	×	T=12.7 L=126 节
3	AD16-03	链条	BELT	2		×	×	T=15.875 L=86 节
4	YC19025	过桥皮带	BELT	1		×	×	HC 3060
5	YC19020	皮带	BELT	1		×	×	HM 3160
6	AD28-11	链条	CHAIN	1		×	×	T=15.875 L=44 节
7	YC17290	脱谷皮带	BELT	1		×	×	3HB 2140
8	YC17373	行走双联带	BELT	1		×	×	2HB 3155
9	AD37-25	链条	CHAIN	1		×	×	T=15.875 L=57 节
10	AD34-28	链条	CHAIN	1		×	×	T=15.875 L=35 节
11	YC17499	油泵带	BELT	1			×	HB1582

RIGHT-HAND DRIVE
右侧传动

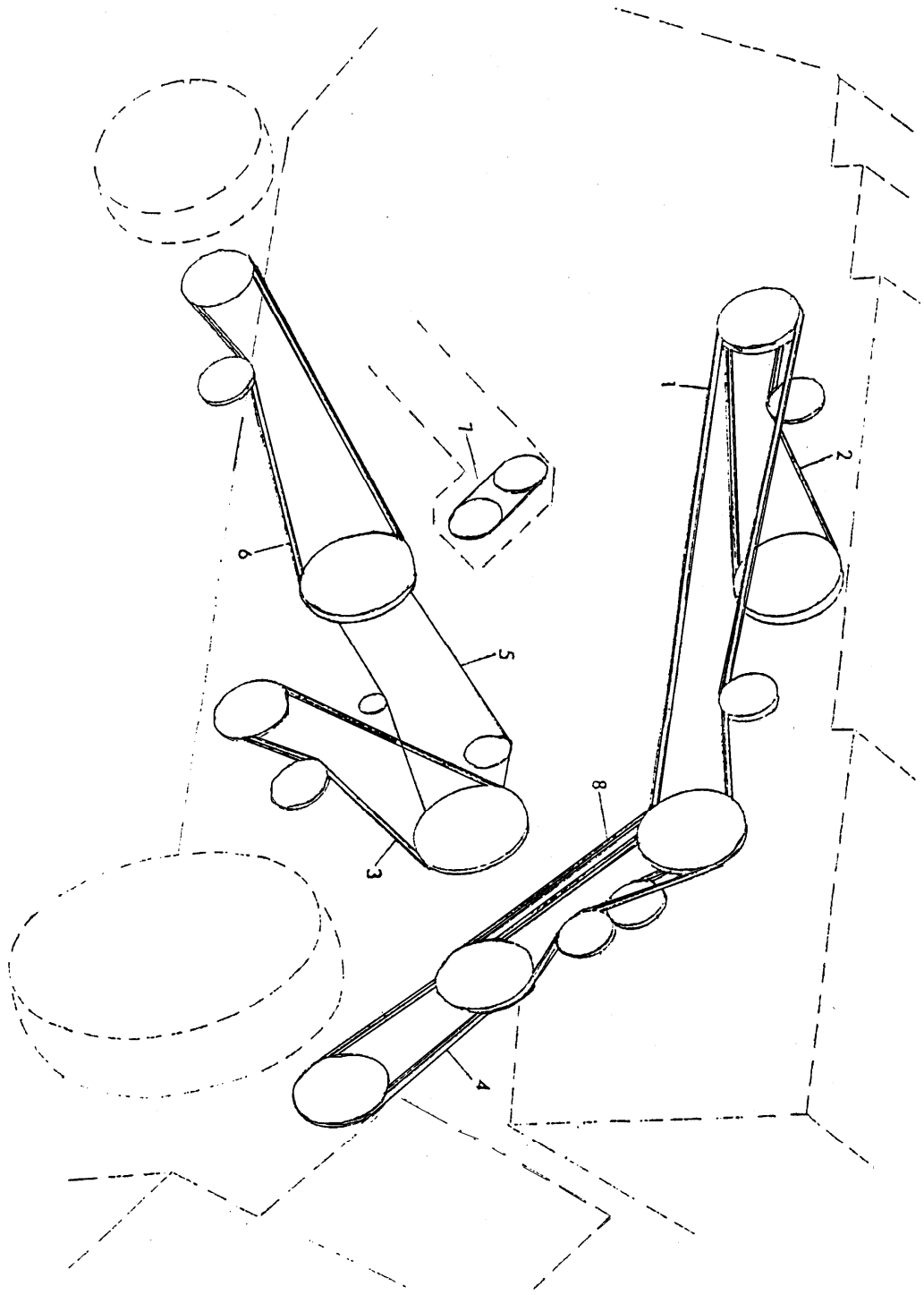

序号	件　号			数量		MODELS		备　　注
						3	3	
						0	0	
						7	7	
						0	0	
						W	W	
KEY	PART NO.	名　　称	DESCRIPTION	QTY	SERIAL NO.	L	Y	REMARKS
1	YC11422	脱谷皮带	BELT	1		×	×	3HB 3150
2	YC16236	卸粮皮带	BELT	1		×	×	HC 1700
3	YC16235	风扇皮带	BELT	2		×	×	HC 2020
4	YC16237	过桥皮带	BELT	1		×	×	HC 2636
5	AYC12647	链条	CHAIN	1		×	×	T=15.875 L=123 节
6	YC19019	皮带	BELT	1		×	×	HC 2345
7	AD30-29	链条	CHAIN	1		×	×	T=15.875 L=61 节
8	YC12332	滚筒皮带	BELT	1		×	×	HDj 2115

IDLER
张紧轮

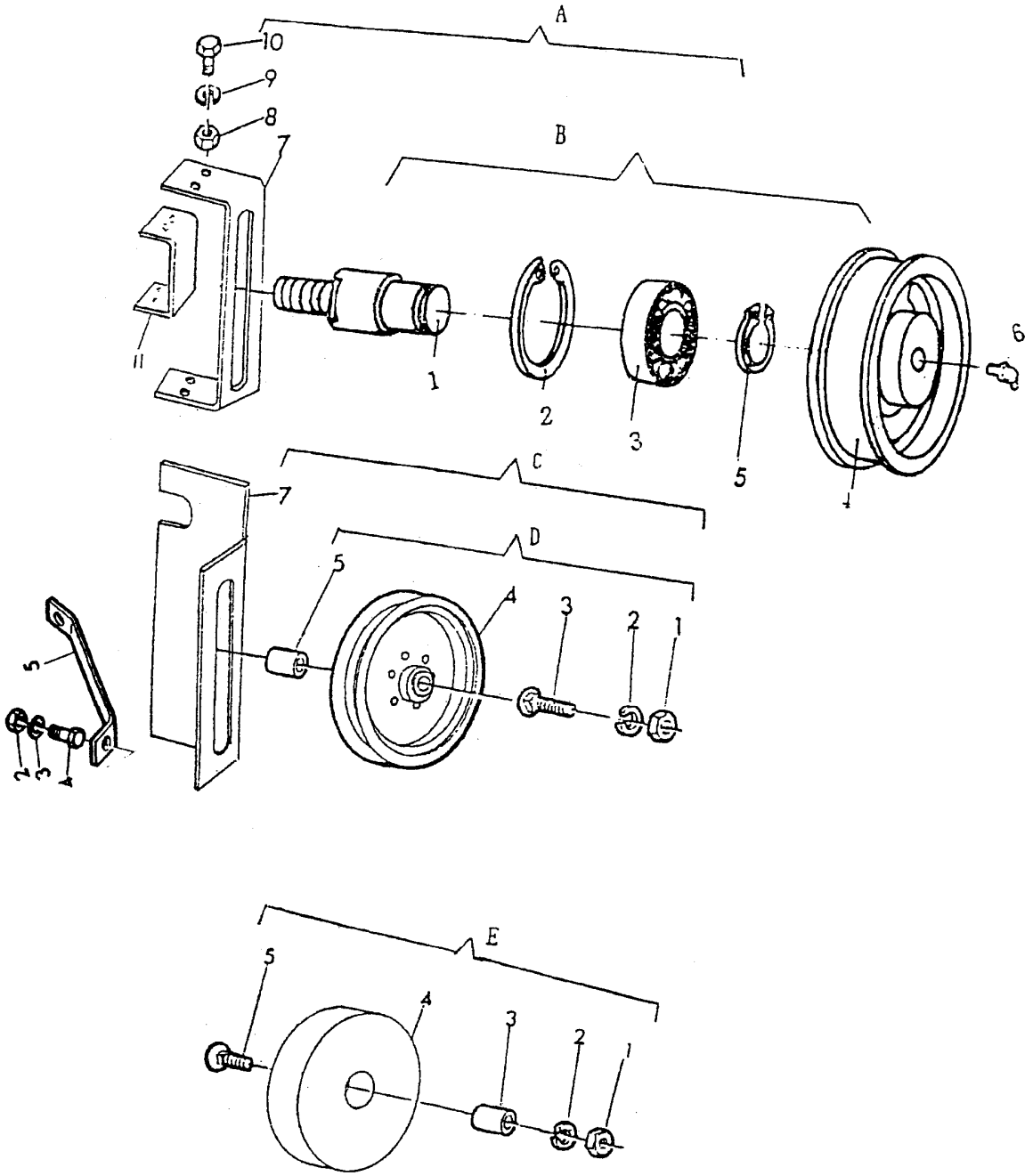

序号 KEY	件　号 PART NO.	名　称 DESCRIPTION	数量 QTY	SERIAL NO.	MODELS 307 0	备　注 REMARKS
			A			
7	YC11533	支架 BRACKET	1		×	
8	14G00082	螺母 NUT	AR		×	M8 GB6170-86 8 Zn.D
9	12G45008	弹垫 LOCK NUT	AR		×	8 GB93-87 Zn.D
10	19G08425	螺栓 CAP SCREW	AR		×	M8X25 GB5783-86 8.8Zn.D
11	YC11532	支架 BRACKET	1		×	
1	YC11788	轴 SHAFT	1		×	
2	40G00052	挡圈 SWAP RING	1		×	52 GB893.1-86Zn.D
3	00G60205	轴承 BEARING	1		×	GB279-88
4	YC11778	皮带轮 PULLEY	1		×	
5	40G02025	挡圈 SNAP RING	1		×	25 GB894.1-86Zn.D
6	58G21010	油杯 LUBRIRATION FITTING	1		×	M10X100 GB1152-79
			C			
2	14G00162	螺母 NUT	1		×	M16 GB6170-86 8 Zn.D.
3	12G45016	垫圈 LOCK WASHER	1		×	16 GB93-87 Zn.D
4	03G44749	螺栓 CAP SCREW	1		×	M16x65 GB801-88 8.8 Zn.D
5	YC11516	支板 BRACKET	1		×	
7	YC11470	支板 BRACKET	1		×	
			D			
1	14G00162	螺母 NUT	1		×	M16 GB6170-86 8 Zn.D
2	12G45016	垫圈 LOCK WASHER	1		×	16 GB93-87 8Zn.D
3	03G44749	螺栓 CAP SCREW	1		×	M16X65 GB801-88 8 Zn.D
4	AYC11096	皮带盘 SHEAVE	1		×	
	00G180203	轴承 BEARING	1		×	GB279-88
	AYC12267	皮带盘 SHEAVE	1		×	
	40G00040	挡圈 SNAP RING	1		×	40 GB893.1-86 Zn.D
5	YC11560	间管 SPACER	1		×	
			E			
1	14G00102	螺母 NUT	1		×	M10 GB6170-86 8 Zn.D
2	12G45010	垫圈 LOCK WASHER	1		×	10 GB93-87 Zn
	24G10010	垫圈 WASHER	1		×	10 GB96-85 Zn.D
3	YC16602	间管 SPACER	1		×	
4	YC16601	张紧轮 IDLER	1		×	
5	03G44448	螺栓 CAP SCREW	1		×	M10x60 GB801-88 8.8 Zn.D
7	YC11533	支架 BRACKET	1		×	

TAILINGS AND CLEAN GRAIN AUGER HOUSING
搅龙壳体

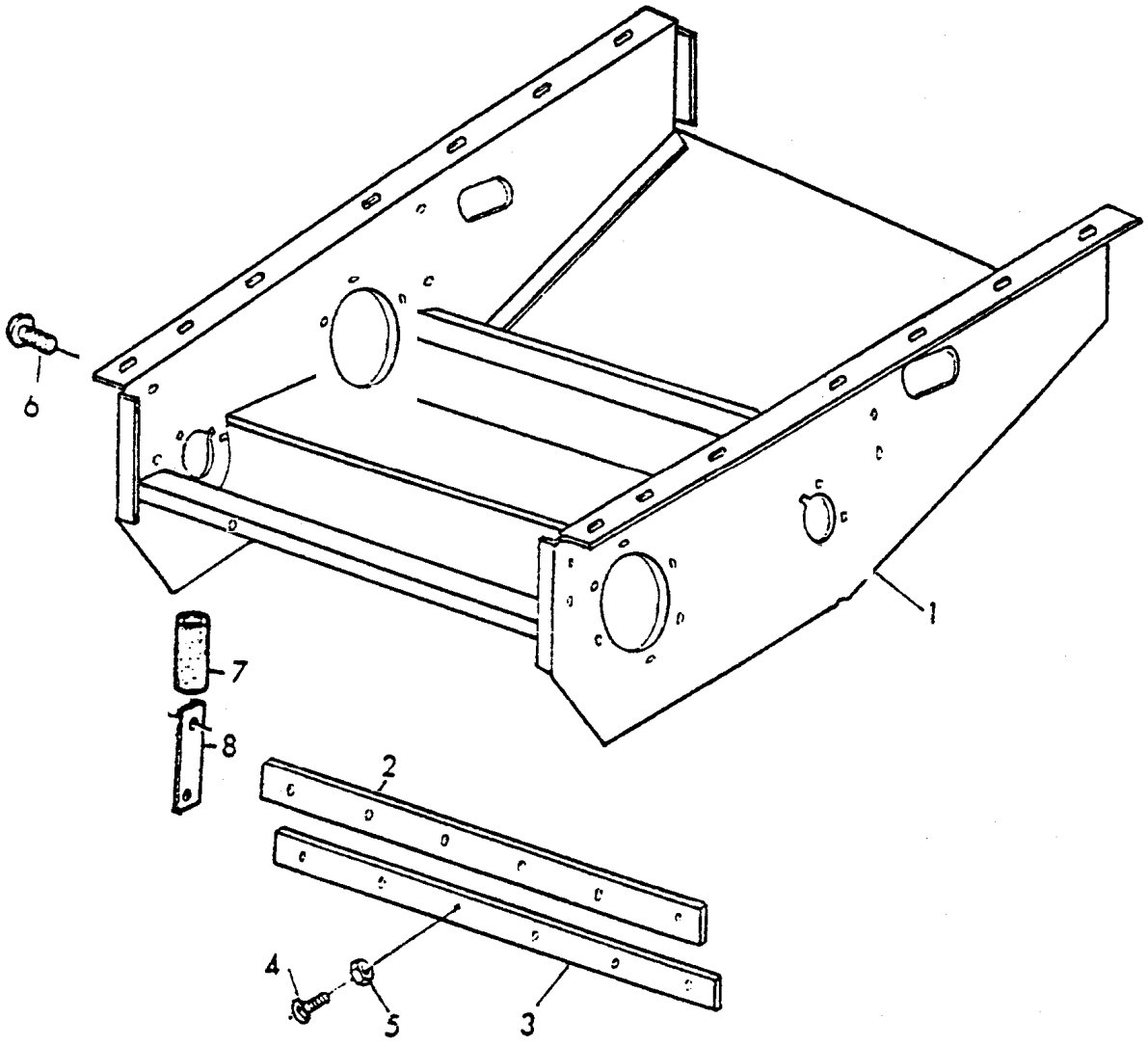

序号	件　号			数量		MODELS	备　　注
						3	
						0	
						7	
KEY	PART NO.	名　　称	DESCRIPTION	QTY	SERIAL NO.	0	REMARKS
1	AYC10387	搅龙壳焊合	HOUSEING	1		×	
2	YC11206	密封板	GASKET	2		×	
3	YC11220	压条	REINFORCEMENT	2		×	
4	21G08420	螺钉	SCREW	12		×	M6X20 GB67-85 Zn.D
5	14G14060	螺母	NUT	12		×	M6 GB6170 Zn.D
6	21G40425	螺钉	SCREW	8		×	M6X25 GB68-85 Zn.D
7	YC11207	胶管	HOSE	4		×	
8	YC11242	压条	REINFORCEMENT	4		×	

GRAIN ELEVATOR
籽粒升运器

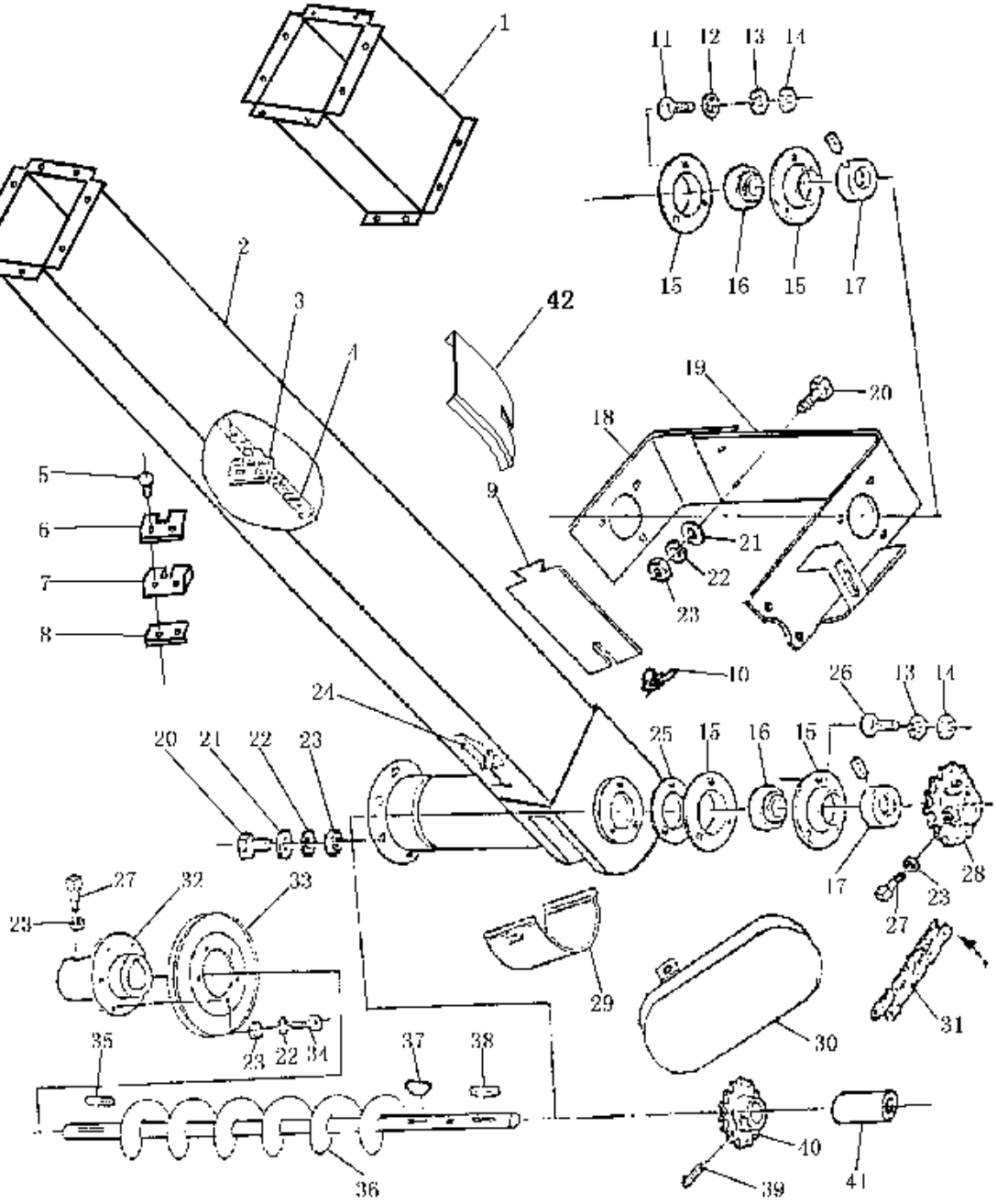

序号 KEY	件　号 PART NO.	名　　称	DESCRIPTION	数量 QTY	SERIAL NO.	MODELS 3 0 7 0	备　　注 REMARKS
1	AYC11367	连接段	JOIN SECT	1		×	
2	AYC11366	升运器	ELEVATOR	1		×	
3	AYC11372	链刮板	PADDLE	1		×	
4	AYC11371	输送链	LINK CHAIN	1		×	128 节
5	16M2524	铆钉	RIVET	64		×	6×18 GB867-86
6	YC11753	加强板	PLATE	32		×	
7	YC11751	凹刮板	PADDLE	32		×	
8	YC11752	压条	PADDLE	32		×	
9	YC11181	窥视门	COVER	1		×	
10	YC12352	螺母	WINGNUT	1		×	GB62-88 Zn.D
11	19M7166	螺栓	CAP SCREW	3		×	M10×20 GB5783-86 8.8Zn.D
12	24M7028	垫圈	WASHER	3		×	10 GB97.1-85 Zn.D
13	12M7013	垫圈	LOCK WASHER	AR		×	10 GB93-87 Zn.D
14	14M7140	螺母	NUT	AR		×	M10 GB6170-86 8Zn.D
15	Z38395	轴承盖	FLANGETTE	4		×	
16	00G390206	轴承	BALL BEARING	2		×	GB3882-87
17	00GP506	偏心套	LOCKINGCOLLAR	2		×	GB3882-87
18	YC11133	接板	PLATE	1		×	
19	AYC10365	接板焊合	PLATE	1		×	
20	19M7139	螺栓	CAP SCREW	AR		×	M8×20 GB5783-86 8.8Zn.D
21	24M7055	垫圈	WASHER	AR		×	8 GB97.1-85 Zn.D
22	12M7008	垫圈	LOCK WASHER	AR		×	8 GB93-87 Zn.D
23	14M7029	螺母	NUT	AR		×	M8 GB6170-86 8Zn.D
24	AYC10510	卡子组合	CLIP COMBINATION	2		×	
25	YC11129	大垫	WASHER	1		×	
26	03M7085	螺栓	CAP SCREW	3		×	M10×30 GB14-88 8.8Zn.D
27	22G36425	螺钉	SCREW	3		×	M8×25 GB84-88 33H Zn.D
28	YC11427	链轮	CHAIN SPROCKET	1		×	Z=17
29	AYC10369	下盖焊合	COVER	1		×	
30	AYC10364	盖	COVER	1		×	
31	AD37-25	链条	CHAIN	1		×	T=15.875 L=57
32	YC11431	轮毂	HUB	1		×	
33	AYC10436	皮带轮	PULLEY	1		×	
34	19M7163	螺栓	CAP SCREW	6		×	M8×25 GB5783-86 8.8Zn.D
35	49G00540	键	SHAFT KEY	1		×	8×40 GB1096-79
36	AYC10363	搅龙	AUGER	1		×	
37	26G00828	键	SHAFT KEY	1		×	8×28 GB1099-79
38	49G00535	键	SHAFT KEY	1		×	8×35 GB1096-79
39	34M7037	销	SPRINGPIN	1		×	5×50 GB879-86
40	YC11161	链轮	CHAIN SPROCKET	1		×	Z=7
41	YC11156	间管	SPACER	1		×	
42	YC11139	拉伸板	STRETCH BOARD	1		×	

UPPER PART OF CLEAN GRAIN ELEVATOR
粮食升运器端头

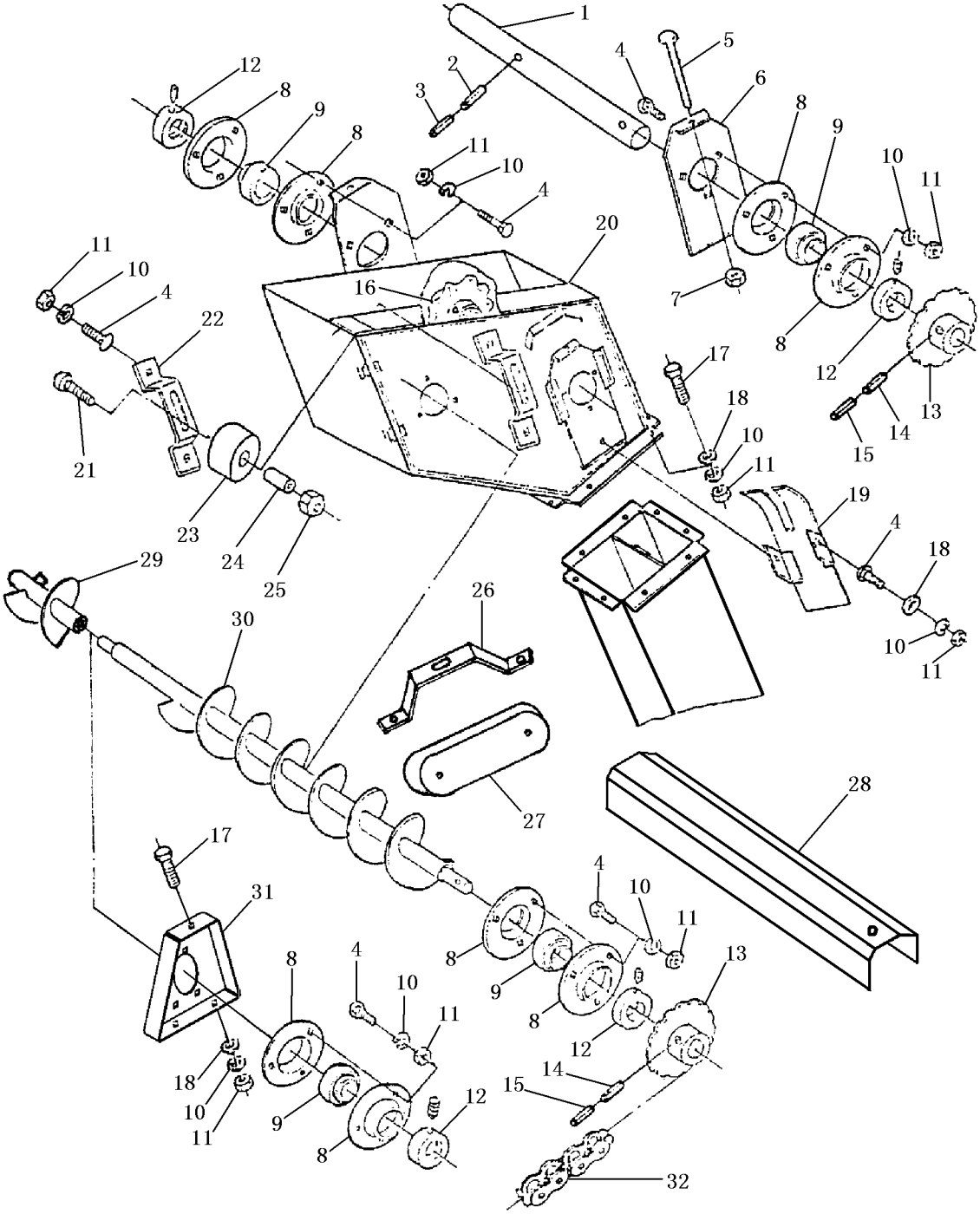

序号 KEY	件　号 PART NO.	名　　称	DESCRIPTION	数量 QTY	SERIAL NO.	MODELS 3 0 7 0	备　　注 REMARKS
1	YC11152	轴	SHAFT	1		×	
2	34M7049	销	SPRINGPIN	1		×	8×50 GB879-86
3	34M7037	销	SPRINGPIN	1		×	5×50 GB879-86
4	03M7054	螺栓	SCREW	AR		×	M8×20 GB14-88 8.8Zn.D
5	19M7384	螺栓	CAPSCREW	2		×	M10×60 GB5783-86 8.8Zn.D
6	YC11180	调节板	ADJUSTER	2		×	
7	14G25102	螺母	NUT	2		×	M10 GB889-86 8Zn.D
8	P47232	轴承盖	FLANGETTE	8		×	
9	00G390205	轴承	BALL BEARING	4		×	GB3882-87
10	12M7008	垫圈	LOCK WASHER	AR		×	8 GB93-87 Zn.D
11	14M7029	螺母	NUT	AR		×	M8 GB6170-86 8Zn.D
12	00GP505	偏心套	LOCKINGCOLLAR	4		×	GB3882-87
13	YC11159	链轮	CHAIN SPROCKET	2		×	Z=16
14	34M7048	销	SPRINGPIN	2		×	8×45 GB879-86
15	34M7036	销	SPRINGPIN	2		×	5×45 GB879-86
16	YC11162	链轮	CHAIN SPROCKET	1		×	Z=7
17	19M7139	螺栓	CAPSCREW	AR		×	M8×20 GB5783-86 8.8Zn.D
18	24M7055	垫圈	WASHER	AR		×	8 GB97-85 Zn.D
19	AYC10366	封闭板焊合	GASKET	1		×	
20	AYC11368	粮食头	ELEVATOR	1		×	
21	03M7245	螺栓	SCREW	1		×	M8×55 GB801-88 8.8Zn.D
22	YC14163	张紧架	HOLDER	1		×	
23	YC16601	尼龙张紧轮	TIGHTENER	1		×	
24	YC16602	衬套	BUSHING	1		×	
25	14M7307	螺母	LOCK NUT	1		×	M8 GB889-86 8Zn.D
26	AYC11377	传动罩架焊合	HOLDER	1		×	
27	AYC11376	盖	COVER	1		×	
28	AYC11449	分布搅龙罩	COVER	1		×	
29	AYC11374	活动搅龙	AUGER	1		×	
30	AYC11373	均布搅龙	AUGER	1		×	
31	YC14159	支座	HOLDER	1		×	
32	AD28-11	链条	CHAIN	1		×	T=15.875　L=44 节

TAILINGS ELEVATOR
杂余升运器

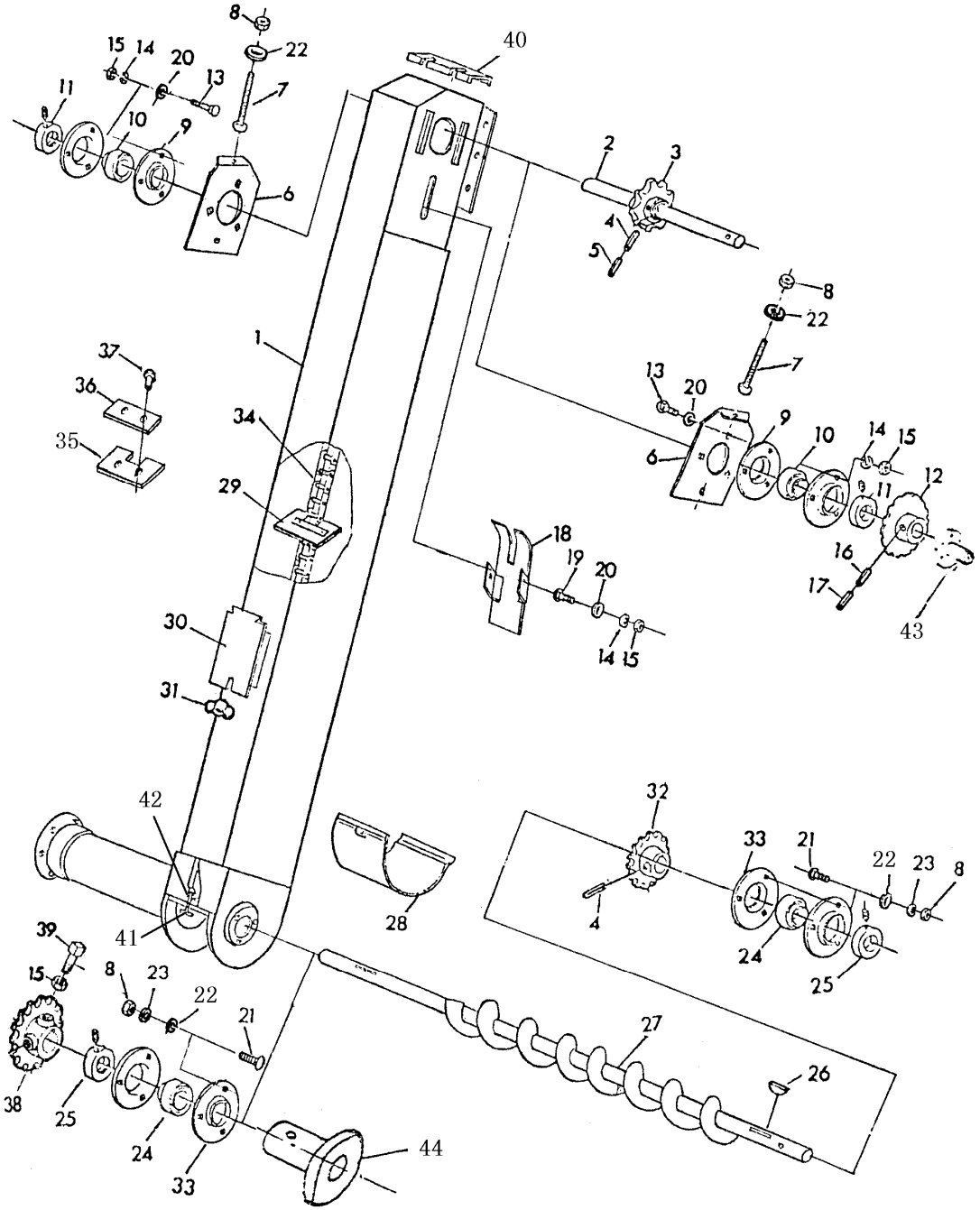

序号 KEY	件　号 PART NO.	名　　称	DESCRIPTION	数量 QTY	SERIAL NO.	MODELS 3 0 7 0	备　　注 REMARKS
1	AYC11396	杂余升运器	ELEVATOR	1		×	
2	YC11203	轴	SHAFT	1		×	
3	YC11160	链轮	CHAIN SPROCKET	1		×	
4	34M7037	销	SPRINGPIN	2		×	5X50 GB879-86
5	34M7049	销	SPRINGPIN	1		×	8X50 GB879-86
6	YC11180	调节板	ADJUSTER	2		×	
7	YC11755	螺栓	CAPSCREW	2		×	M10X110
8	14M7140	螺母	NUT	AR		×	M10 GB6170-86 8 Zn.D
9	P47232	轴承座	FLANGETTE	4		×	
10	00G390205	轴承	BALL BEARING	2		×	GB 3882-87
11	00GP505	偏心套	LOCKINGCOLLAR	2		×	GB 3882-87
12	YC11188	链轮	CHAIN SPROCKET	1		×	20 齿
13	03M7054	螺栓	CAPSCREW	6		×	M8X20 GB14-88 8.8Zn.D
14	12M7008	弹垫	LOCK WASHER	AR		×	8 GB93-87 Zn.D
15	14M7029	螺母	NUT	AR		×	M8 GB6170-86 8 Zn.D
16	34M7036	销	SPRINGPIN	1		×	5X45 GB879-86
17	34M7048	销	SPRINGPIN	1		×	8X45 GB879-86
18	AYC10371	封闭板焊合	GASKET	1		×	
19	03M7054	螺栓	CAPSCREW	2		×	M8X20 GB14-88 8.8Zn.D
20	24M7055	垫圈	WASHER	AR		×	8 GB97.1-85 Zn.D
21	03M7017	螺栓	CAPSCREW	6		×	M10X25 GB14-88 8.8Zn.D
22	24M7028	垫圈	WASHER	AR		×	10 GB97.1-85 Zn.D
23	12M7013	弹垫	LOCK WASHER	AR		×	10 GB93-87 Zn.D
24	00G390206	轴承	BALL BEARING	2		×	GB 3882-87
25	00GP506	偏心套	LOCKINGCOLLAR	2		×	GB 3882-87
26	26G00828	键	SHAFT KEY	1		×	8X38 GB1099-79
27	AYC10375	搅龙焊合	AUGER	1		×	
28	AYC10376	下盖焊合	COVER	1		×	
29	AYC10374	链条装配	PADDLE	1		×	
30	YC11181	窥视门	COVER	1		×	
31	YC12352	蝶型螺母	WINGNUT	1		×	M8 GB62-88 5 Zn.D
32	YC11161	链轮	CHAIN SPROCKET	1		×	Z=7
33	Z38395	轴承座	FLANGETTE	4		×	
34	AYC10373	杂余输送链	LINK CHAIN	1		×	
35	YC11157	刮板	PADDLE	16		×	
36	YC11173	压条	PADDLE	16		×	
37	16M2525	铆钉	RIVET	AR		×	6X20 GB867-86
38	YC11428	链轮	CHAIN SPROCKET	1		×	Z=20
39	22G36425	螺钉	SCREW	2		×	M8X25 GB84-88 8.8Zn.D
40	YC11158	压板	PLACER	1		×	
41	YC11734	T 字螺栓	CAPSCREW	1		×	
42	YC11735	卡子钩	TIGHTENER	1		×	
43	YC11189	轮毂	HUB	1		×	
44	YC11121	套	SPACER	1		×	

UPPER PAPT OF TAILINGS ELEVATOR
杂余升运器端头

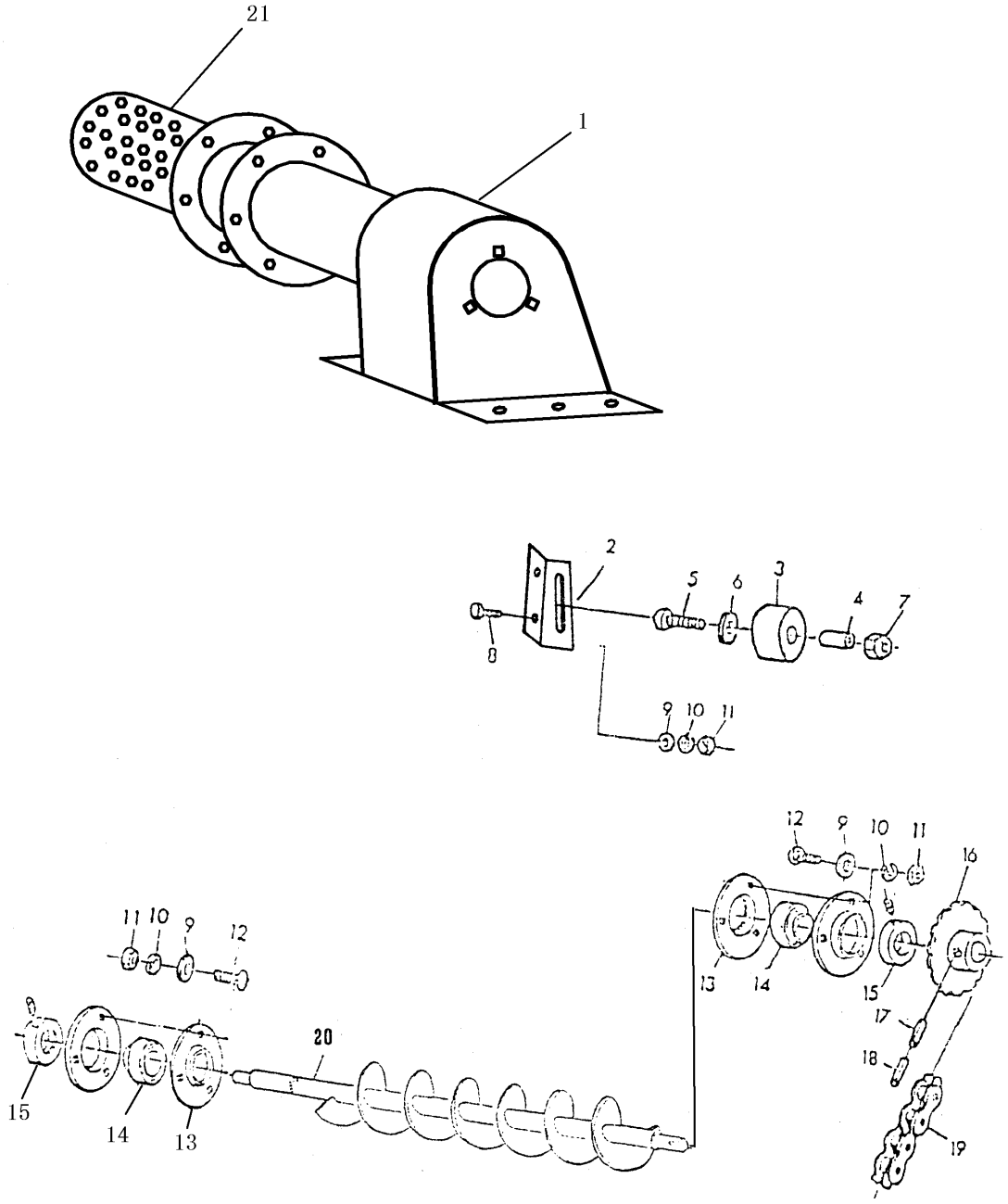

序号	件　号			数量		MODELS	备　　注
						3	
						0	
						7	
KEY	PART NO.	名　　称	DESCRIPTION	QTY	SERIAL NO.	0	REMARKS
1	AYC10380	杂余头	HOUSING	1		×	
2	YC11169	支板	PLATE	1		×	
3	YC16601	张紧轮	TIGHTENER	1		×	
4	YC16602	间管	SPACER	1		×	
5	03G24448	螺栓	CAPSCREW	1		×	M10X60 GB14-88 8.8Zn.D
6	24G00010	垫圈	WASHER	1		×	10 GB97.1-86 Zn.D
7	14G25102	螺母	NUT	1		×	M0 GB889-86 8 Zn.D
8	19G08420	螺栓	CAPSCREW	AR		×	M8X20 GB5783-86 8.8Zn.D
9	24G00008	垫圈	WASHER	AR		×	8 GB97.1-86 Zn.D
10	12G45008	弹垫	LOCK WASHER	AR		×	8 GB93-87 Zn.D
11	14G00082	螺母	NUT	AR		×	M8 GB6170-86 8 Zn.D
12	03M7054	螺栓	CAPSCREW	6		×	M8X20 GB14-88 8.8Zn.D
13	P47232	轴承座	FLANGETTE	4		×	
14	00G390205	轴承	BALL BEARING	2		×	GB 3882-87
15	00GP505	偏心套	LOCKINGCOLLAR	2		×	GB 3882-87
16	YC11159	链轮	CHAIN SPROCKET	1		×	
17	34G00545	销	SPRINGPIN	1		×	5X45 GB879-86
18	34G00845	销	SPRINGPIN	1		×	8X45 GB879-86
19	AD30-29	链条	CHAIN	1		×	T=15.875X61 节
20	AYC10379	杂余上轴	AUGER	1		×	
21	AYC10381	杂余头	HOUSING	1		×	

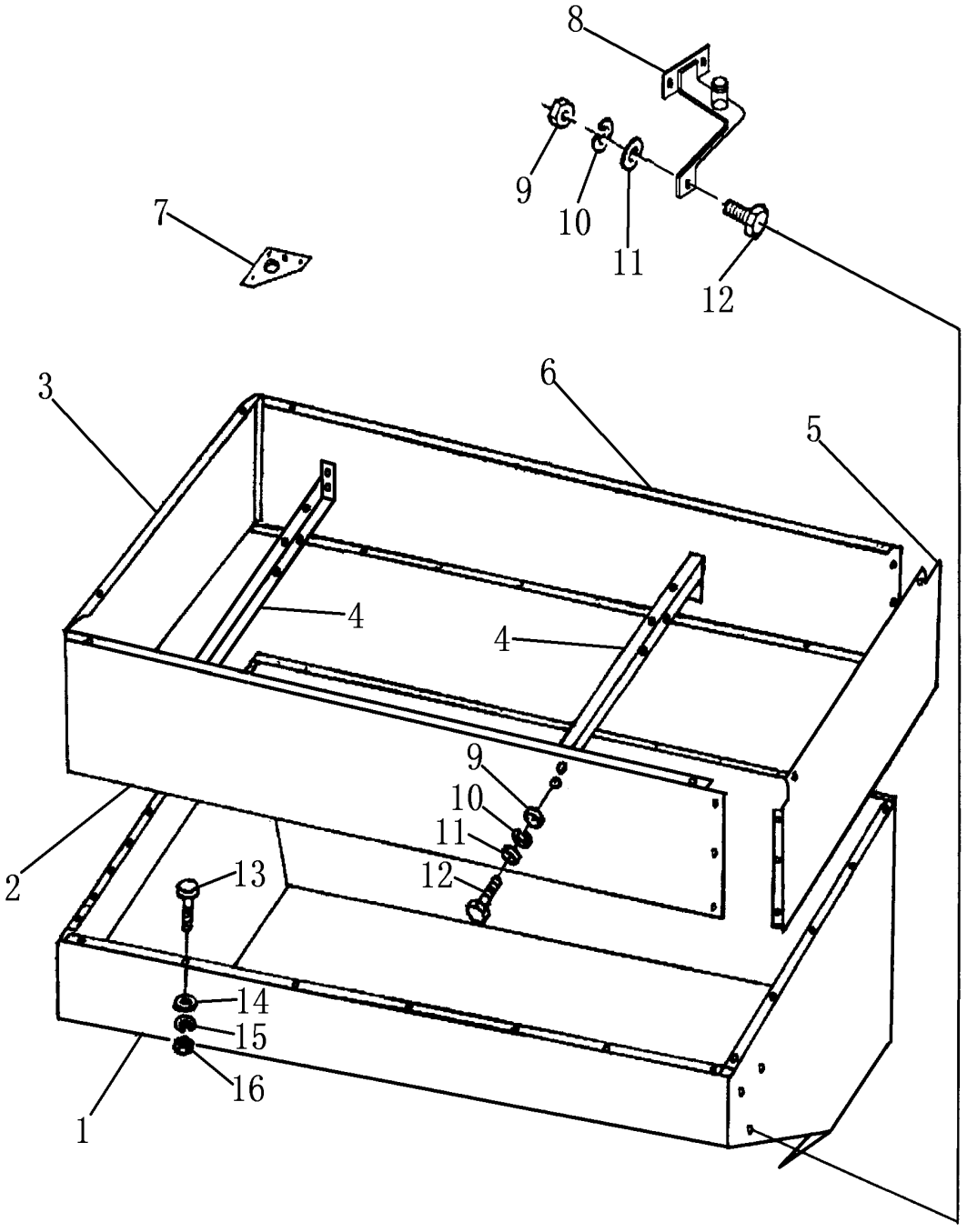
8
9
10
11
12
7
3
6
5
4
4
9
10
11
12
2
13
14
15
16
1

序号	件　号			数量		MODELS	备　　注
						3	
						0	
						7	
KEY	PART NO.	名　称	DESCRIPTION	QTY	SERIAL NO.	0	REMARKS
1	AYC11360	箱体	SIDE WALL	1		×	
2	YC14133	前板	SIDE WALL	1		×	
3	YC14135	右围板	SIDE WALL	1		×	
4	AYC11375	梁	BRACE	2		×	
5	YC14135	左围板	SIDE WALL	1		×	
6	YC14134	后板	SIDE WALL	1		×	
7	YC14140	连板	SIDE WALL	4		×	
8	AYC11378	支架	HOLDER	1		×	
9	14M7029	螺母	NUT	AR		×	M8 GB6170-86 8Zn.D
10	24M7055	垫圈	WASHER	AR		×	8 GB97.1-85 Zn.D
11	12M7008	垫圈	LOCK WASHER	AR		×	8 GB93-87 Zn.D
12	19M7163	螺栓	CAP SCREW	AR		×	M8×25 GB5783-86 8.8Zn.D
13	19M7560	螺栓	CAP SCREW	AR		×	M6×16 GB5783-86 8.8Zn.D
14	24M7054	垫圈	WASHER	AR		×	6 GB97.1-85 Zn.D
15	12M7116	垫圈	LOCK WASHER	AR		×	6 GB93-87 Zn.D
16	14M7027	螺母	NUT	AR		×	M6 GB6170-86 8Zn.D

GRAIN TANK ASSEMBLY PARTS
粮箱零件

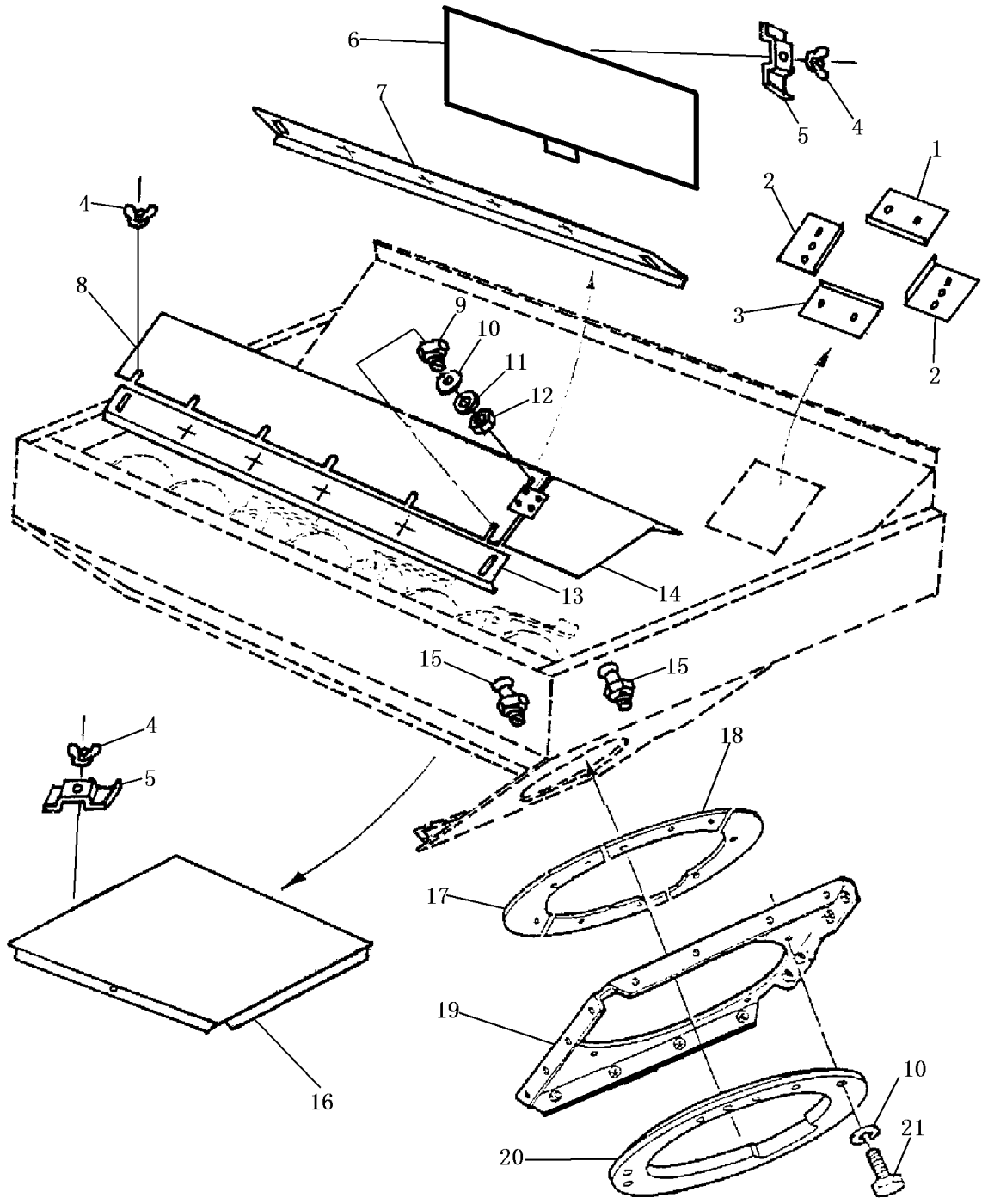

序号	件　号			数量		MODELS	备　　注
						3	
						0	
						7	
KEY	PART NO.	名　　称	DESCRIPTION	QTY	SERIAL NO.	0	REMARKS
1	AYC10406	上角板	SIDE WALL	1		×	D34002　D34416
2	AYC10408	角板	SIDE WALL	2		×	D34001　D34418
3	AYC10407	底角板	SIDE WALL	1		×	D34002　D34417
4	YC12352	蝶型螺母	WINGNUT	13		×	
5	Z20367	检查孔压板	PLATE	7		×	
6	AYC11365	后盖板焊合	COVER	1		×	
7	YC11325	后调节板	ADJUSTER	1		×	
8	YC11326	盖板	COVER	1		×	
9	19M7139	螺栓	CAP SCREW	AR		×	M8×20 GB5783-86 8.8Zn.D
10	24M7055	垫圈	WASHER	AR		×	8 GB97.1-85 Zn.D
11	12M7008	垫圈	LOICK WASHER	AR		×	6 GB93-87 Zn.D
12	14M7027	螺母	NUT	1		×	M6 GB6170-86 8.8Zn.D
13	YC11324	前调节板	SIDE WALL	1		×	
14	AYC10412	盖板焊合	COVER	1		×	卸粮筒专用
15	58M5573	油嘴	LUBRIGATION FITING	2		×	M6×1 GB1152-79
16	YC11292	盖板	COVER	1		×	
17	YC11319	弧形板	SECTOR	2		×	
18	YC11296	弧形板	SECTOR	2		×	
19	AYC10398	回转板	ROTATOR	1		×	
20	YC11285	导向板	RING	1		×	
21	19M7298	螺栓	CAP SCREW	8		×	M8×35 GB5783-86 88Zn.D

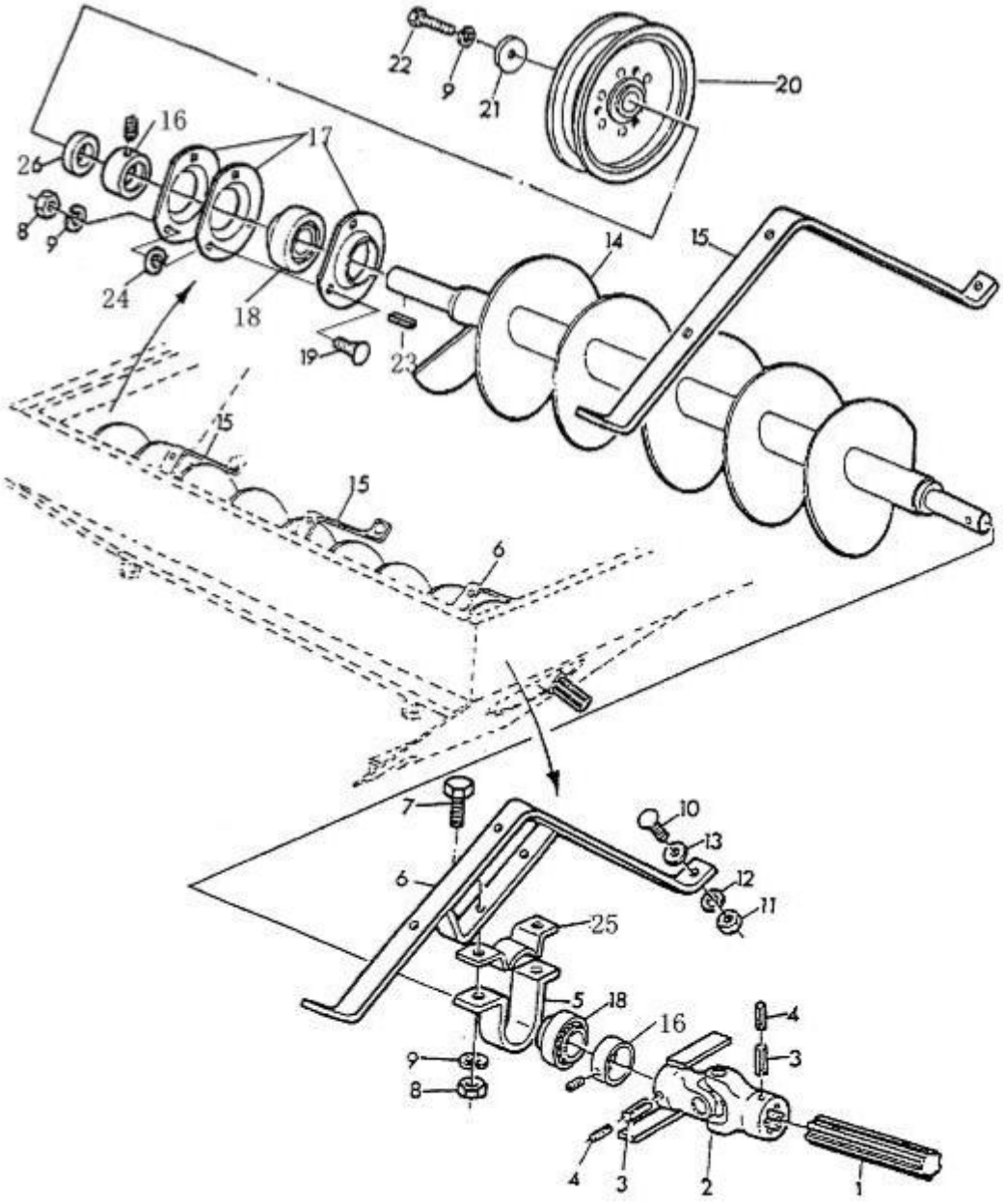
22
9
21
20
16
17
26
8
9
24
18
19
23
14
15
15
15
6
7
6
10
13
12
11
25
5
18
16
4
3
9
8
4
3
2
1

序号	件　号			数量		MODELS	备　注
						3	
						0	
						7	
KEY	PART NO.	名　称	DESCRIPTION	QTY	SERIAL NO.	0	REMARKS
1	YC11351	花键轴	SHAFT	1		×	
2	AYC10537	万向节	UNIVERSAL JOINT	1		×	
3	34M7054	弹性销	SPRINGPIN	2		×	10×50 GB879-86
4	34M7044	弹性销	SPRINGPIN	2		×	6×50 GB879-86
5	Z35894	轴承座	FLANGETTE	1		×	
6	AYC10411	支架	HOLDER	1		×	
7	19M7167	螺栓	CAP SCREW	AR		×	M10×25 GB5783-86 8.8Zn.D
8	14M7140	螺母	NUT	AR		×	M10 GB6170-86 8Zn.D
9	12M7013	垫圈	LOCK WASHER	AR		×	10 GB93-87 Zn.D
10	19M7163	螺栓	CAP SCREW	AR		×	M8×25 GB5783-86 8.8Zn.D
11	14M7029	螺母	NUT	AR		×	M8 GB6170-86 8Zn.D
12	12M7008	垫圈	LOCK WASHER	AR		×	8 GB93-87 Zn.D
13	24M7055	垫圈	WASHER	AR		×	8 GB97.1-85 Zn.D
14	AYC10397	搅龙	AUGER	1		×	搅龙叶片 D34504
15	YC11340	扁钢	HOLDER	2		×	
16	00GP506	偏心套	LOCKING COLLAR	2		×	GB3882-87
17	Z38395	轴承盖	FLANGETTE	3		×	
18	00G390206	轴承	BALL BEARING	2		×	GB3882-87
19	03M7085	螺栓	CAP SCREW	3		×	M10×30 GB14-88 8.8Zn.D
20	AYC10434	皮带盘	PULLEY	1		×	
21	YC11461	垫圈	WASHER	1		×	
22	19M7168	螺栓	CAP SCREW	1		×	M10×30 GB5783-86 8.8Zn.D
23	49M4152	键	SHAFT KEY	1		×	C8×40 GB1096-79
24	24M7028	垫圈	WASHER	AR		×	10 GB97.1-85 Zn.D
25	Z35893	轴承座	FLANGETTE	1		×	
26	D37824	间管	SPACER	1		×	38x32x14

GRAIN TANK UNLOADING DRIVE
卸粮离合器

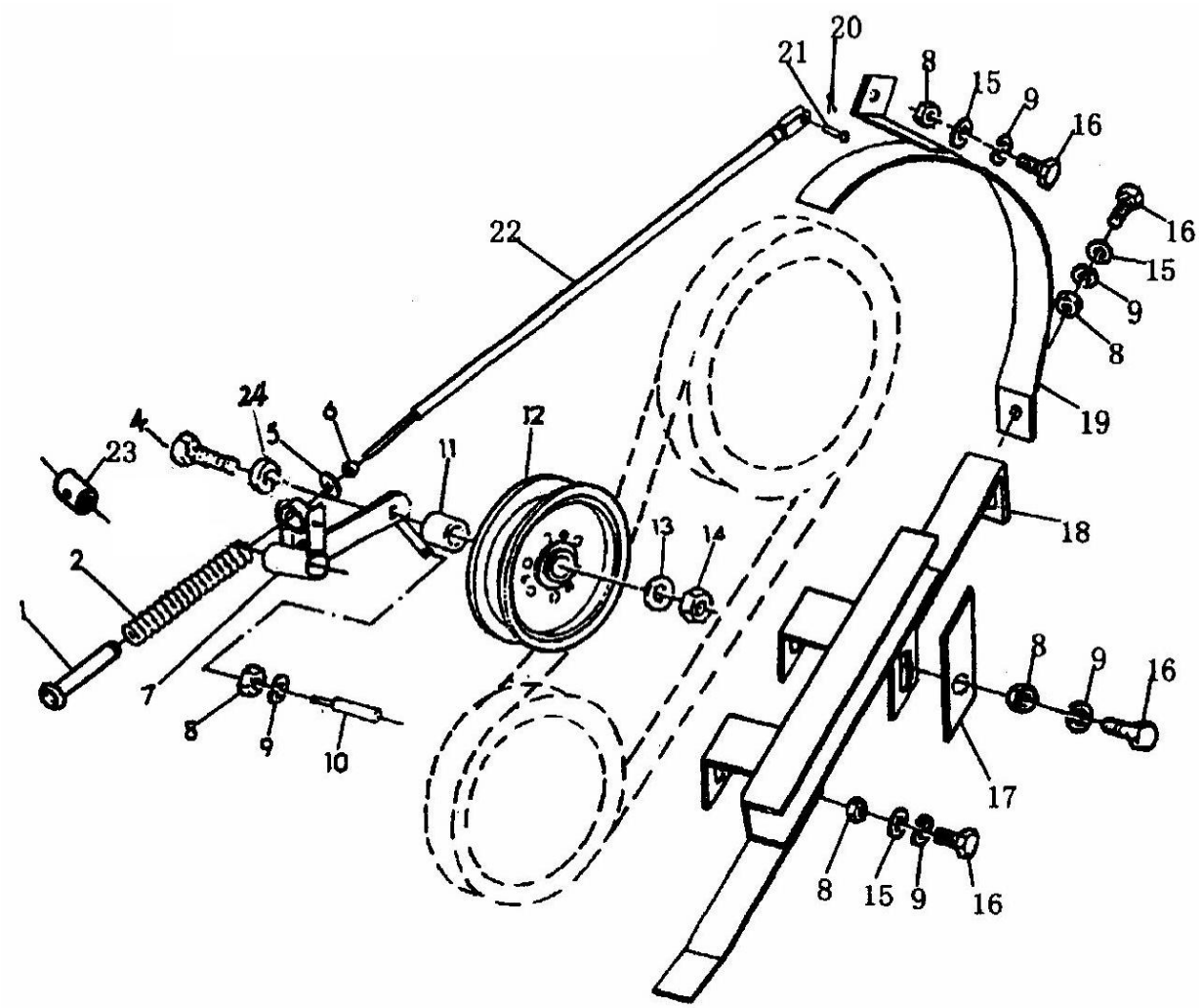

序号	件　号			数量		MODELS	备　　注
						3	
						0	
						7	
KEY	PART NO.	名　　称	DESCRIPTION	QTY	SERIAL NO.	0	REMARKS
1	AYC10433	导管	SLEEVE	1		×	
2	YC11536	弹簧	SPRING	1		×	
4	19M7344	螺栓	CAP SCREW	1		×	M16X65 GB5782-88 8 Zn.D
5	YC11458	挡圈	WASHER	1		×	
6	14M7031	螺母	NUT	2		×	M12 GB6170-86 8Zn.D
7	AYC11910	支臂	HOLDER	1		×	
8	14M7291	螺母	NUT	AR		×	M8 GB6170-86 8Zn.D
9	12M7008	垫圈	LOCK WASHER	AR		×	8 GB93-87 Zn.D
10	YC11537	挡销	BAR	1		×	
11	S20078	间管	SPACER	1		×	
12	AYC11096	皮带盘	SHEAVE	1		×	
13	12M7069	垫圈	LOCK WASHER	1		×	16 GB93-87 Zn.D
14	14M7142	螺母	NUT	1		×	M16 GB6170-86 8Zn.D
15	24M7055	垫圈	WASHER	AR		×	8 GB97.1-85 Zn.D
16	19M7139	螺栓	CAP SCREW	AR		×	M8×20 GB5783-86 8.8Zn.D
17	D37418	挡板	PLATE	1		×	
18	AYC10432	皮带罩	GUIDE	1		×	
19	AYC10431	皮带罩	GUIDE	1		×	
20	11G01626	开口销	COTTER PIN	1		×	2.5×26 GB91-86 Zn.D
21	YC11776	销轴	PIN	1		×	
22	YC11572	拉杆	ROD	1		×	
23	YC11573	轴套	SPACER	1		×	
24	24M7053	垫圈	WASHER	1		×	16 GB97.1-85 Zn.D

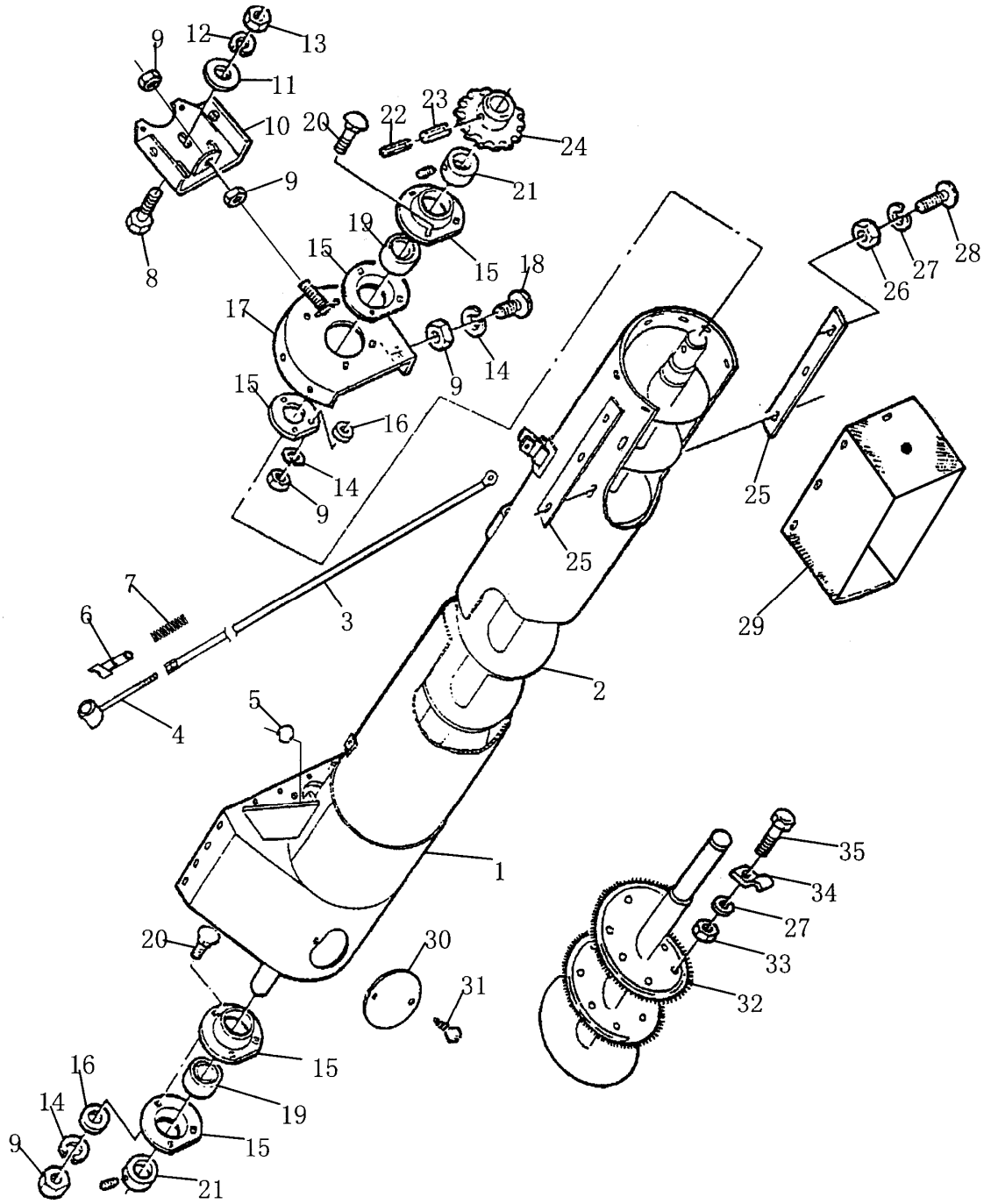
9
12
13
11
10
20
22
23
24
21
9
8
19
15
15
18
17
14
9
15
16
14
9
25
26
27
28
25
29
7
6
3
4
2
5
1
35
34
27
33
32
30
31
20
15
16
14
19
9
15
21

序号 KEY	件　号 PART NO.	名　　称	DESCRIPTION	数量 QTY	SERIAL NO.	MODELS 3 0 7 0	备　　注 REMARKS
1	AYC10410	卸粮筒	SPOUT	1		×	标准型
	AYC10396	卸粮筒	SPOUT	1		×	加长型
2	AYC10418	搅龙	AUGER	1		×	加长搅龙
	AYC10417	搅龙	AUGER	1		×	标准型
3	AYC10409	拉杆	ROD	1		×	
4	AYC10514	销套	SPACE	1		×	
5	YC11763	扭簧	SPRING	1		×	
6	AYC10515	锁片	LOCK SET	1		×	
7	YC11766	弹簧	SPRING	1		×	
8	03M7017	螺栓	CAPSCREW	2		×	M10×25 GB14-88 8.8Zn.D
9	14M7029	螺母	NUT	AR		×	M8 GB6170-86 8Zn.D
10	AYC10404	座	TIGHTENER	1		×	
11	24M7028	垫圈	WASHER	AR		×	10 GB97-85 Zn.D
12	12M7013	垫圈	LOCK WASHER	AR		×	10 GB93-87 Zn.D
13	14M7140	螺母	NUT	AR		×	M10 GB6170-86 8Zn.D
14	12M7008	垫圈	LOCK WASHER	AR		×	8 GB93-87 Zn.D
15	P47232	轴承座	PRESSEDFLANGEDHOUSING	4		×	
16	24M7055	垫圈	WASHER	AR		×	8 GB97-85 Zn.D
17	AYC10405	端座	COVER	1		×	
18	21G08516	螺钉	SCREW	AR		×	M8×16 GB67-85 5.6Zn.D
19	00G390205	轴承	BALL BEARING	2		×	GB3882-87
20	03M7054	螺栓	CAPSCREW	AR		×	M8×20 GB14-88 8.8Zn.D
21	00GP505	偏心套	LOCKINGCOLLAR	2		×	GB3882-87
22	34M7036	销	SPRINGPIN	1		×	5×45 GB879-86
23	34M7048	销	SPRINGPIN	1		×	8×45 GB879-86
24	YC11159	链轮	CHAIN SPROCKET	1		×	Z=16　T=15.875
25	YC11303	加强板	REINFORCEMENT	2		×	
26	14M7027	螺母	NUT	AR		×	M6 GB6170-87 8Zn.D
27	12M7116	垫圈	LOCK WASHER	AR		×	6 GB93-87 Zn.D
28	21M1238	螺栓	CAPSCREW	AR		×	M6x18 GB67-85 4.8 Zn.D
29	YC11282	护罩	APRON	1		×	
30	YC11312	盖板	COVER	1		×	
31	21G08312	螺钉	SCREW	2		×	M5×12 GB67-85 4.8Zn.D
32	YC11284	毛刷	BRUSH	1		×	
33	14G14060	螺母	NUT	9		×	M6 GB41-86 5Zn.D
34	Z38579	夹子	CLAMP	9		×	
35	19G52112	螺栓	CAPSCREW	9		×	M6x12 GB5781-86 8.8Zn.D

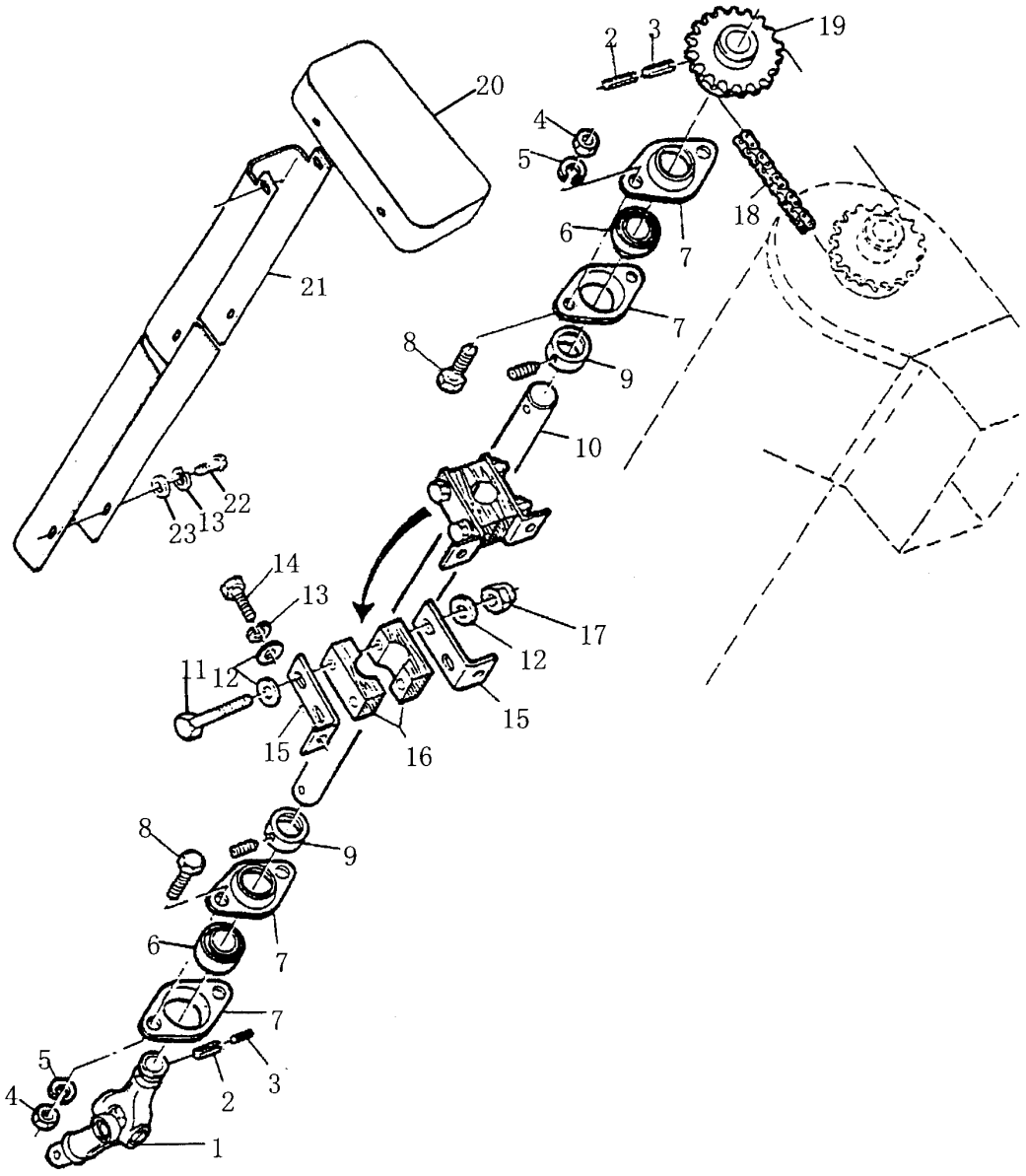
1
2
3
4
5
6
7
8
9
10
11
12
13
14
15
16
17
18
19
20
21
22
23

序号	件　号			数量		MODELS	备　　注
						3	
						0	
						7	
KEY	PART NO.	名　称	DESCRIPTION	QTY	SERIAL NO.	0	REMARKS
1	AS30153	万向节	UNIVERSAL JOINT	1		×	
2	34M7070	销	SPRINGPIN	1		×	10×45 GB879-76 Zn.D
3	34M7043	销	SPRINGPIN	1		×	6×45 GB879-76 Zn.D
4	14G14100	螺母	NUT	4		×	M10 GB41-86 5Zn.D
5	12M7013	垫圈	LOCK WASHER	AR		×	10 GB93-87 Zn.D
6	00G390206	轴承	BALL BEARING	2		×	GB3882-87
7	Z30026	轴承座	PRESSEDFLANGEDHOUSING	4		×	
8	03M7017	螺栓	CAP SCREW	4		×	M10×25 GB14-88 8.8Zn.D
9	00GP506	偏心套	LOCKINGCOLLAR	2		×	GB3882-87
10	YC11361	轴	SHAFT	1		×	加长
	YC11362	轴	SHAFT	1		×	标准
11	19M7270	螺栓	CAP SCREW	2		×	M8×65 GB5782-86 8.8Zn.D
12	24M7055	垫圈	WASHER	AR		×	8 GB97.1-85 Zn.D
13	12M7008	垫圈	LOCK WASHER	AR		×	8 GB93-87 Zn.D
14	19M7139	螺栓	CAP SCREW	2		×	M8×20 GB5783-86 8.8Zn.D
15	YC16875	座	HOLDER	2		×	
16	Z33527	木瓦	BEARING	2		×	
17	14M7307	螺母	NUT	2		×	M8 GB889-86 8Zn.D
18	AD34-28	链条	LINK CHAIN	1		×	T=15.875×35 节
19	YC11286	链轮	CHAIN SPROCKET	1		×	Z=20　T=15.875
20	D34404	罩	APRON	1		×	标准
21	YC11302	罩	APRON	1		×	加长
	YC11322	罩	APRON	1		×	标准
22	21M1238	螺钉	SCREW	AR		×	M6×18 GB67-85 4.8Zn.D
23	24M7054	垫圈	WASHER	AR		×	6 GB97-85 Zn.D

UNLOADING SUPPORT
卸粮筒支架

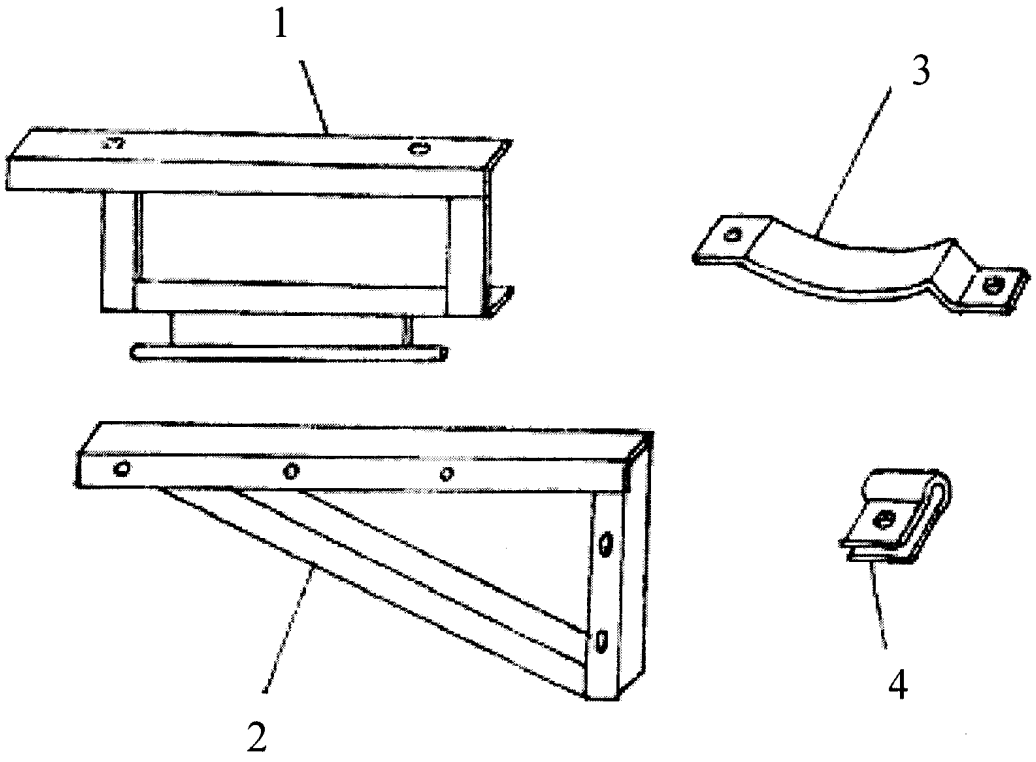

序号 KEY	件　号 PART NO.	名　称 DESCRIPTION	数量 QTY	SERIAL NO.	MODELS 3070	备　注 REMARKS
1	AYC12017	支架 BRACE	1		×	
2	AYC12016	支架 BRACE	1		×	
3	D39459	底座 SUPPORT	1		×	
4	YC14208	折板 ANGLE	2		×	

SIMPLE GRAIN TANK UNLOADING
简易卸粮筒

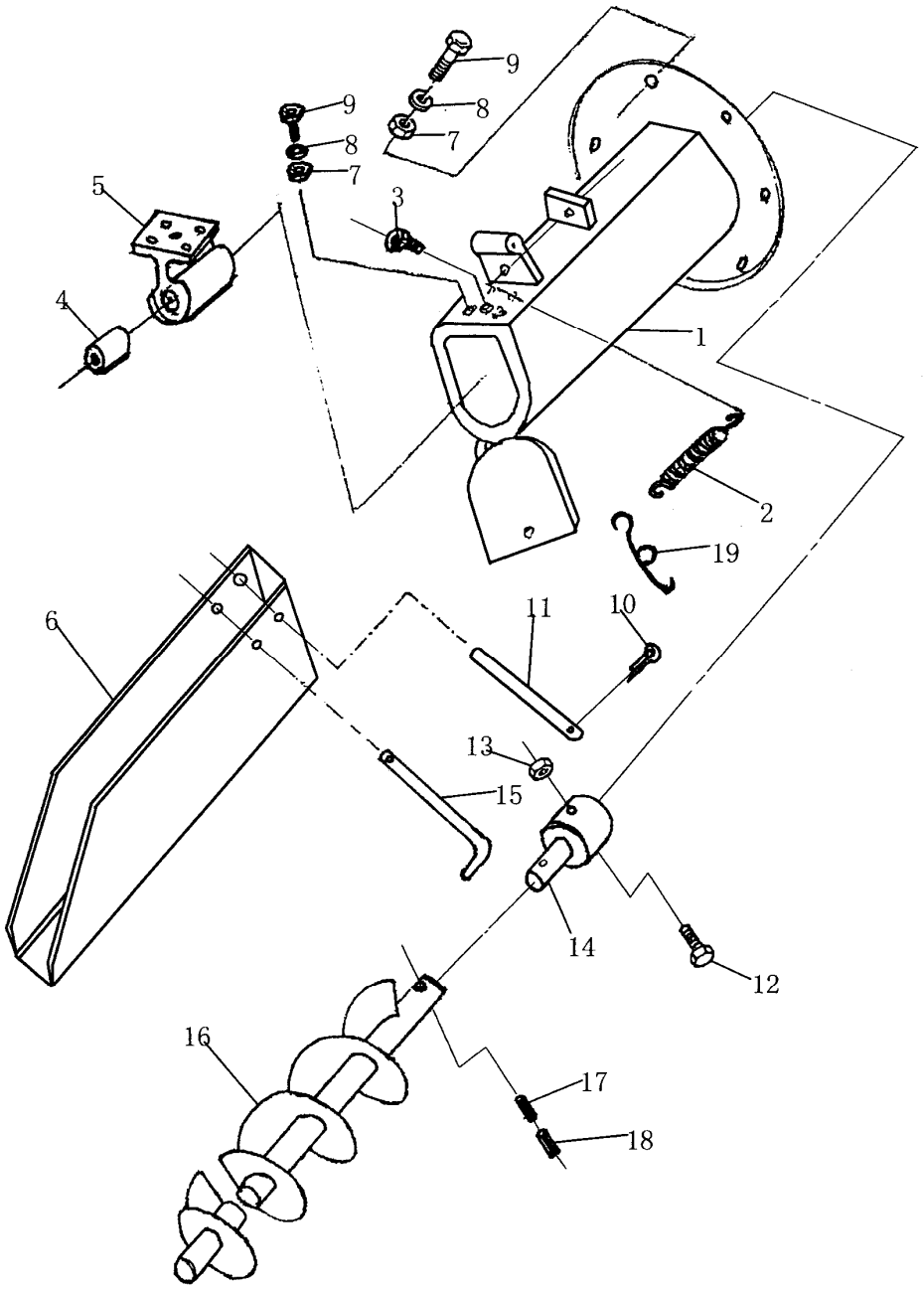

序号 KEY	件　号 PART NO.	名　　称	DESCRIPTION	数量 QTY	SERIAL NO.	MODELS 3 0 7 0	备　　注 REMARKS
1	AYC10416	卸粮斗焊合	SIMPLE GRAIN TANK UNLOADING	1		×	
2	Z25462	拉簧	SPRING	1		×	
3	58M5573	油杯	GREASE CUP	1		×	M6×1.00 GB1152-79
4	YC10238	滑动轴承	BEARING	1		×	
5	YC11287	滑动轴承套	BEARING	1		×	
6	AYC10415	卸粮斗焊合	SPOUT	1		×	
7	14G00082	螺母	NUT	12		×	M8 GB6170-86 8Zn.D
8	12G45008	垫圈	LOCK WASHER	12		×	8 GB93-87 Zn.D
9	19G08420	螺栓	CAP SCREW	12		×	M8×20 GB5783-86 8.8Zn.D
10	11G02030	销	PIN	2		×	4×30 GB91-86 Zn.D
11	YC11357	销轴	SHAFT	1		×	
12	19G02247	螺栓	CAP SCREW	1		×	M8×55 GB5782-86 8.8Zn.D
13	14G25082	螺母	NUT	1		×	M8 GB889-86 8Zn.D
14	YC11355	连接套	BUSHING	1		×	
15	YC11358	销轴	SHAFT	1		×	
16	AYC10414	粮食推运搅龙	AUGER	1		×	
17	34G00646	销	PIN	1		×	6×50 GB879-86
18	34G01046	销	PIN	1		×	10×50 GB879-86
19	Z34398	弹簧钩	SPRING	1		×	
20	D46841	标记	DECAL	1		×	

CHOPPER MOUNTING ASSEMBLY
切碎器安装

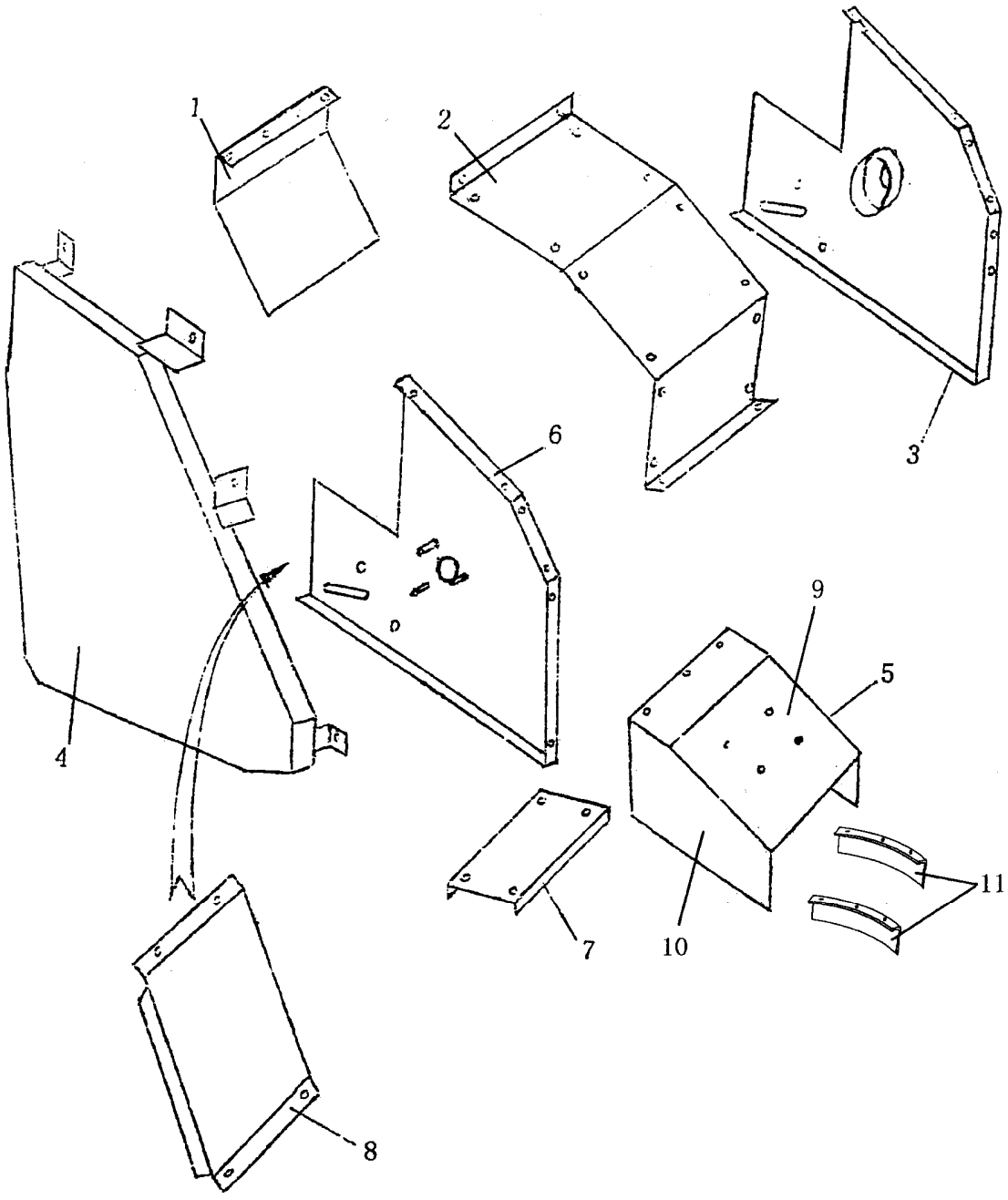

序号 KEY	件　号 PART NO.	名　　称	DESCRIPTION	数量 QTY	SERIAL NO.	MODELS 3 0 7 0	备　　注 REMARKS
1	D24552	折板	SHEET	1		×	
2	D24538	盖板	PLATE	1		×	
3	AD24-34	右侧板焊合	SIDE WALL	1		×	
4	AD24-44	护罩焊合	GUARD PLATE	1		×	
5	D24548	右侧板	SIDE WALL	1		×	
6	AD24-33	左侧板焊合	SIDE WALL	1		×	
7	D24551	隔板	PLATE	1		×	
8	D24539	隔板	PLATE	1		×	
9	D24546	盖板	PLATE	1		×	
10	D24547	左侧板	SIDE WALL	1		×	
11	D24545	挡板	PLATE	2		×	

CUTTERHEAD ROTOR
切碎器转子

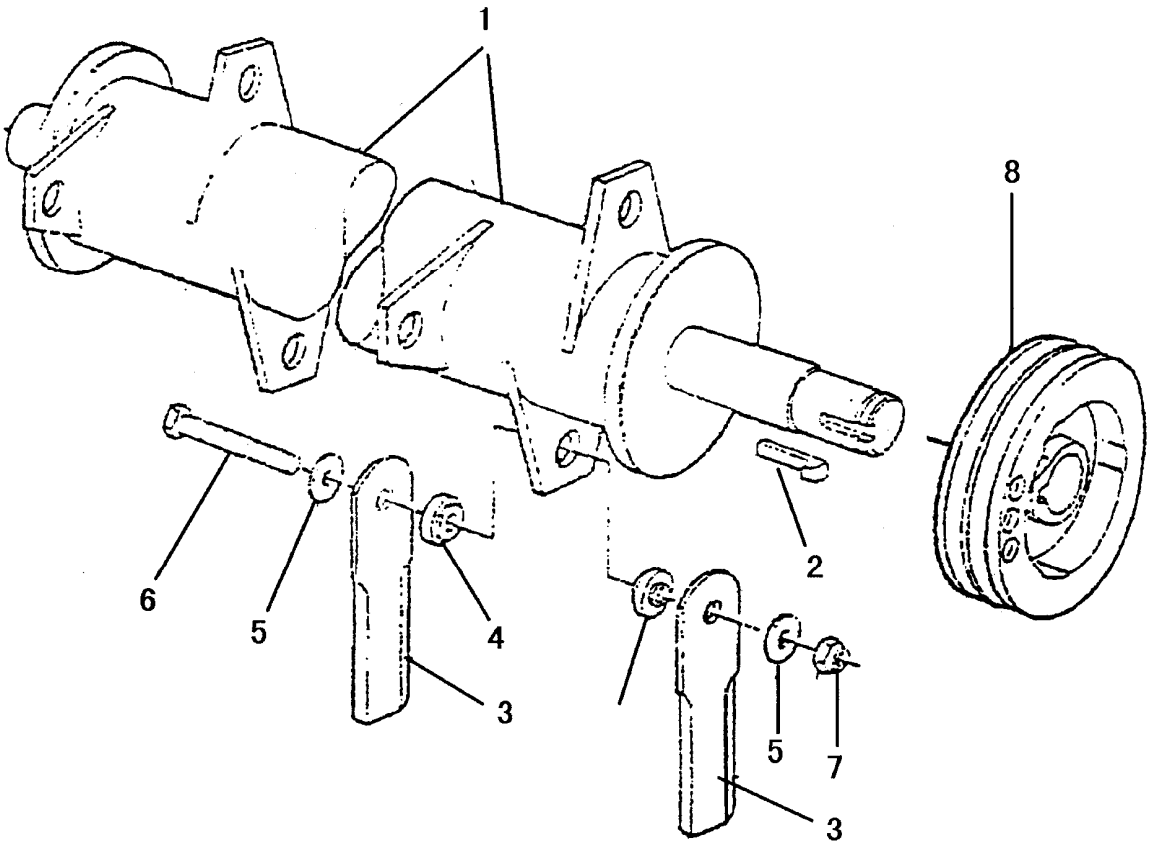

序号	件　号			数量		MODELS	备　　注
						3	
						0	
						7	
KEY	PART NO.	名　　称	DESCRIPTION	QTY	SERIAL NO.	0	REMARKS
1	AD24-36	转子	ROTOR	1		×	定刀用
2	50G01054	键	SHAFT KEY	1		×	10x63 GB1565-79
3	Z42176	动刀片	KNIFE	20		×	
4	Z42175	间隔垫	SPACER	20		×	
5	Z35217	挡圈	WASHER	20		×	
6	19M7658	螺栓	CAP SCREW	10		×	M10x50 GB5782-86 10.9Zn.
7	14G25102	螺母	NUT	10		×	M10 GB889-86 8 Zn.D
8	Z11632	皮带轮	PULLEY	1		×	

CHOPPER MOUNTING ASSEMBLY
切碎器安装

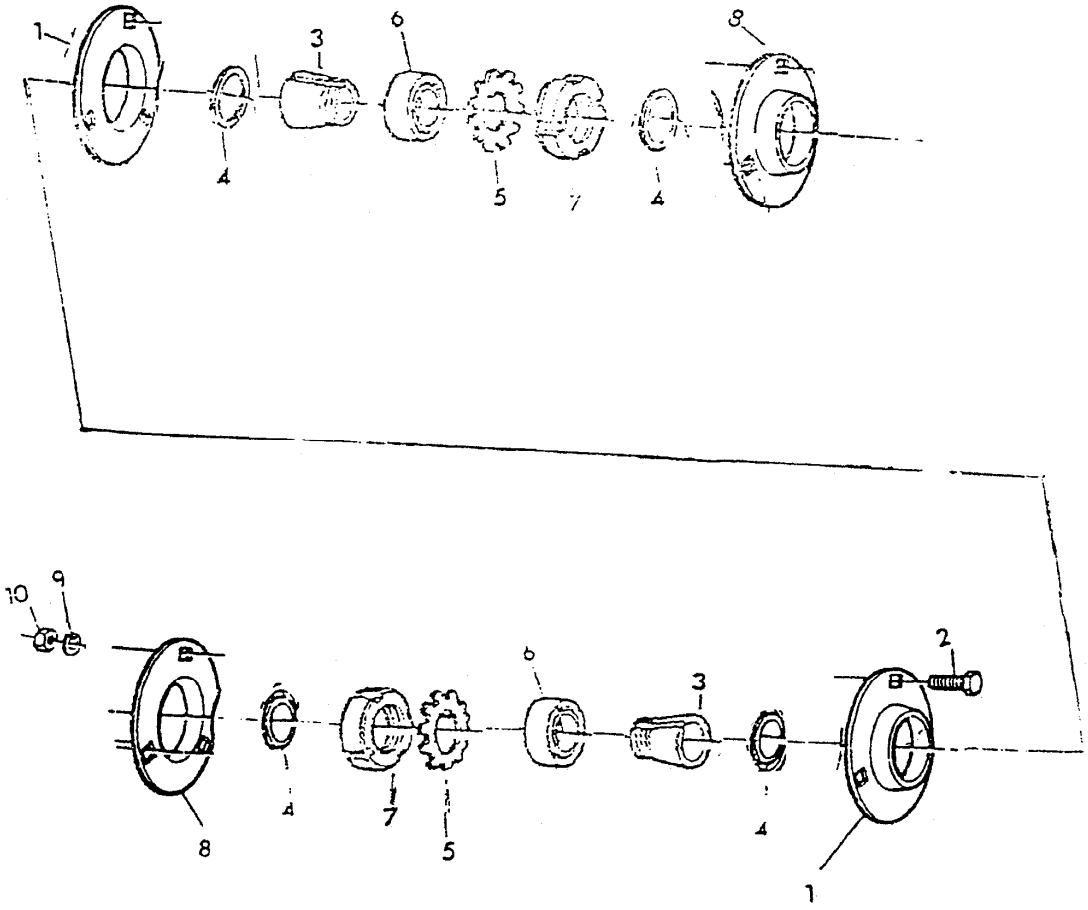

序号	件　号			数量		MODELS	备　注
						3	
						0	
						7	
KEY	PART NO.	名　称	DESCRIPTION	QTY	SERIAL NO.	0	REMARKS
1	AYC12417	轴承座	BEARINGCAP	2		×	
2	19M7167	螺栓	CAP SCREW	6		×	焊在侧壁 AD24-33、AD24-34 上
3	YC16998	锥形套	SLEEVE	2		×	
4	Z35844	毡垫	FELT	2		×	
	Z35845	毡垫	FELT	2		×	
5	Z35843	锁片	SLEEVE	2		×	
6	00G111209	轴承	BEARING	2		×	
7	Z35842	圆螺母	NUT	2		×	
8	AYC12417	轴承座	BEARINGCAP	2		×	有油嘴座
9	12M7013	垫圈	WASHER	6		×	10 GB93-87 Zn.D
10	14M7140	螺母	NUT	6		×	M10 GB6170-86 8 Zn.D

COUNTER KNIVES-ATTACHING PARTS
定刀及连接件

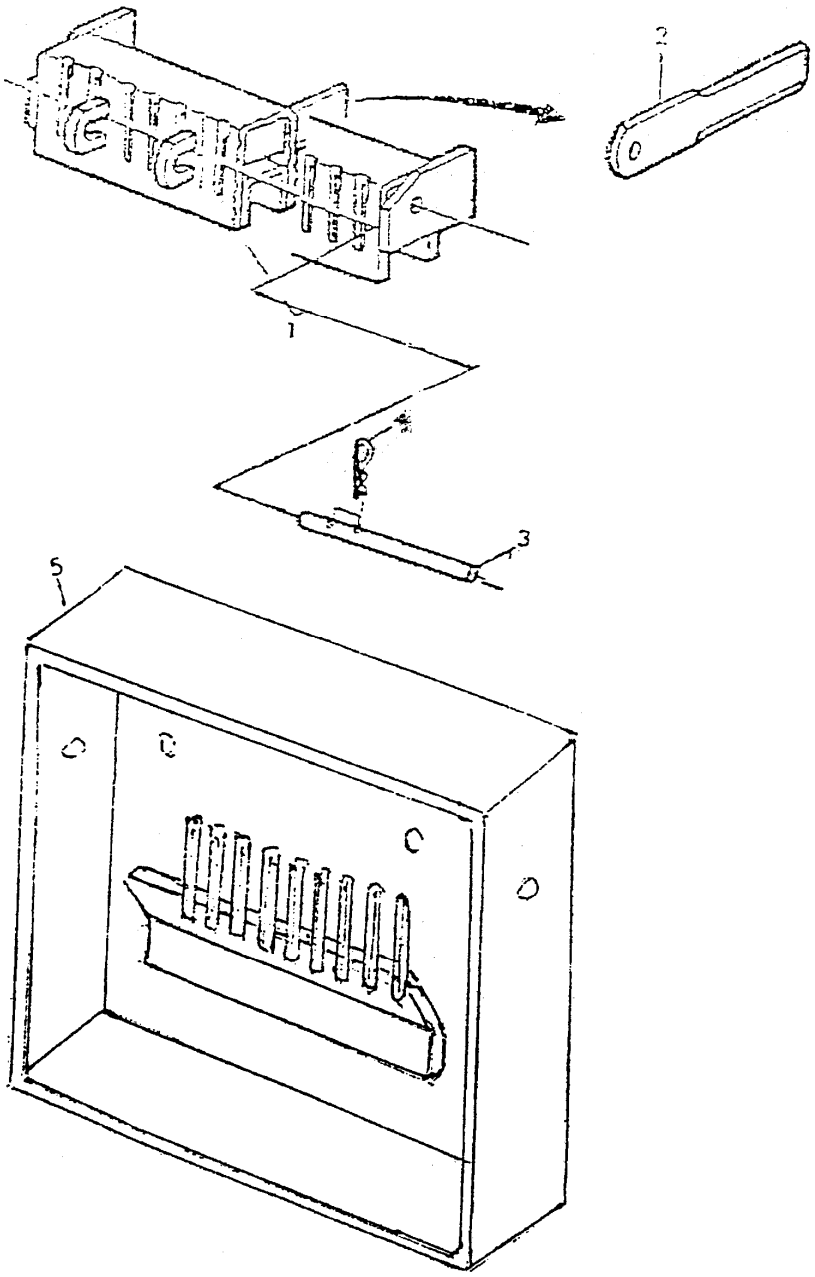

序号 KEY	件　号 PART NO.	名　称	DESCRIPTION	数量 QTY	SERIAL NO.	MODELS 3 0 7 0	备　注 REMARKS
1	AD24-37	定刀架	CUTTERBAR	1		×	
2	Z35241	定刀片	BLADE	9		×	
3	D24544	挡销	PIN	1		×	
4	J16931	弹性销	CLIP	2		×	
5	AD24-58	隔板焊合	PLATE	1		×	

CYLINDER DRIVE
转子传动

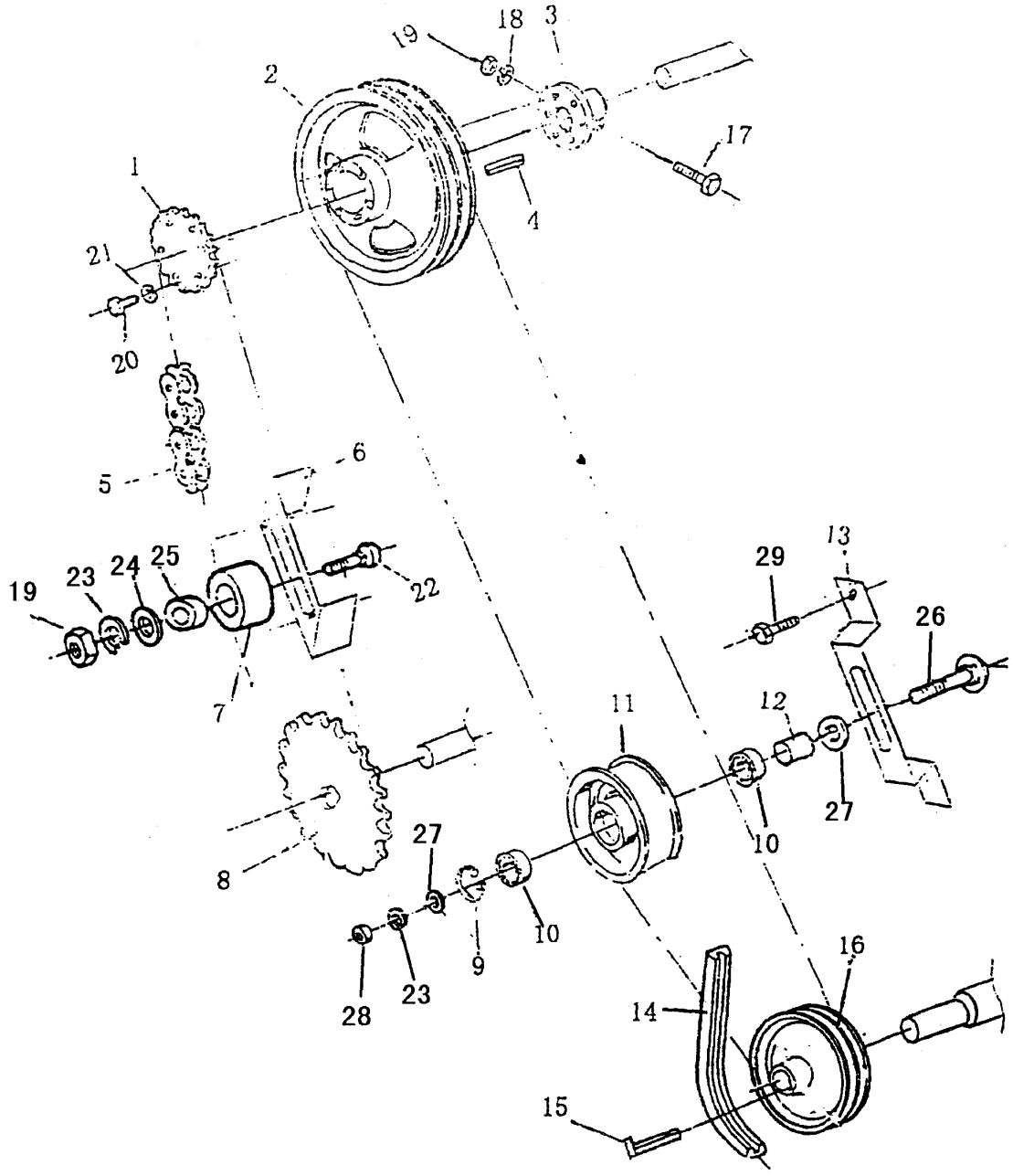

序号 KEY	件　号 PART NO.	名　　称	DESCRIPTION	数量 QTY	SERIAL NO.	MODELS 3 0 7 0	备　　注 REMARKS
1	D37211	链轮	CHAIN SPROCKET	1		×	
2	D37212	皮带轮	PULLEY	1		×	
3	D37140	轮毂	HUB	1		×	
4	49M7014	键	KEY	2		×	12x50 GB1096-79
5	AS30163	链条	CHAI N	1		×	t=15.875 L=94
6	D24534	支架	HOLDER	1		×	
7	YC16601	张紧轮	IDLER	1		×	
8	D37210	链轮	CHAIN SPROCKET	1		×	
9	40G00047	挡圈	SNAP RING	1		×	47 GB893.1-86 Zn.D
10	00G180303	轴承	BEARING	2		×	180303 GB279-88
11	YC11969	张紧轮	PULLEY	1		×	
12	S20078	间管	SPACER	1		×	
13	D24535	支座	HOLDER	1		×	
14	YC17498	三角带	BELT	1		×	
15	50G01054	键	KEY	1		×	10x63 GB1565-79
16	Z11632	皮带轮	PULLEY	1		×	
17	19M7327	螺栓	CAP SCREW	1		×	M10x65 GB5782-86 8.8Zn.D
18	12M7013	垫圈	LOCK WASHER	1		×	10 GB93-87 Zn.D
19	14M7140	螺母	NUT	1		×	M10 GB6170-86 8 Zn.D
20	19M7323	螺栓	CAP SCREW	6		×	M8x40 GB5782-86 8.8Zn.D
21	12M7008	垫圈	LOCK WASHER	6		×	8 GB93-87 Zn.D
22	03M7246	螺栓	CAP SCREW	1		×	M10x60 GB801-88 8.8Zn.D
23	12M7069	垫圈	LOCK WASHER	1		×	16 GB93-87 Zn.D
24	24M7047	垫圈	WASHER	1		×	12 GB97.1-85 Zn.D
25	YC16602	间管	SPACER	1		×	
26	03G44753	螺栓	CAP SCREW	1		×	M16x85 GB801-88 8.8Zn.D
27	24M7053	垫圈	WASHER	1		×	16 GB97.1-85 Zn.D
28	14M7142	螺母	NUT	1		×	M16GB6170-86 8 Zn.D
29	19M7298	螺栓	CAP SCREW	2		×	M8x35 GB5783-86 8.8Zn.D

SHIFT LEVERS
操纵杆

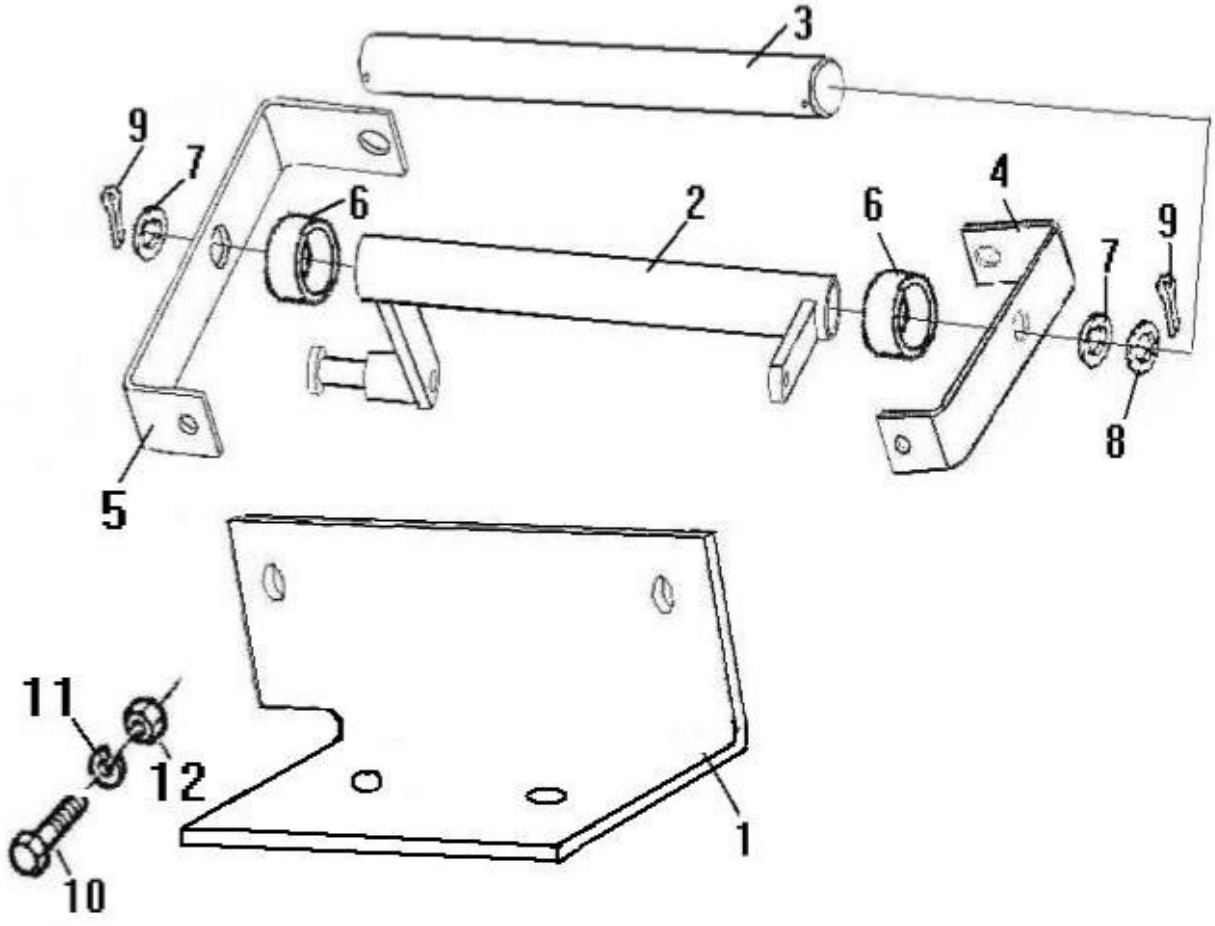

序号	件　号			数量	MODELS	备　　注
KEY	PART NO.	名　　称	DESCRIPTION	QTY	后轮驱动	REMARKS
1	YC15818	支架	BRACKET	1	×	
2	AYC11993	转臂焊合	LEVER	1	×	
3	YC15821	轴	SHEAR PIN	1	×	
4	YC15817	支架	BRACKET	1	×	3070用时数量为2
5	YC15816	支架	BRACKET	1	×	3080用
6	YC10160	衬套	WASHER	1	×	
7	24M7051	垫圈	WASHER	2	×	20 GB97.1-85 Zn.D
8	Z27188	垫圈	WASHER	1	×	
9	11G01726	开口销	CUT PIN	2	×	3x26 GB91-86 Zn.D
10	19G08525	螺栓	BOLT	2	×	M10x25 GB5783-86 8.8 Zn.D
11	12M7013	弹簧垫圈	LOCK WASHER	2	×	10 GB93-87 Zn.D
12	14M7140	螺母	NUT	2	×	M10 GB6170-86 8 Zn.D

SHIFT LEVERS
操纵杆

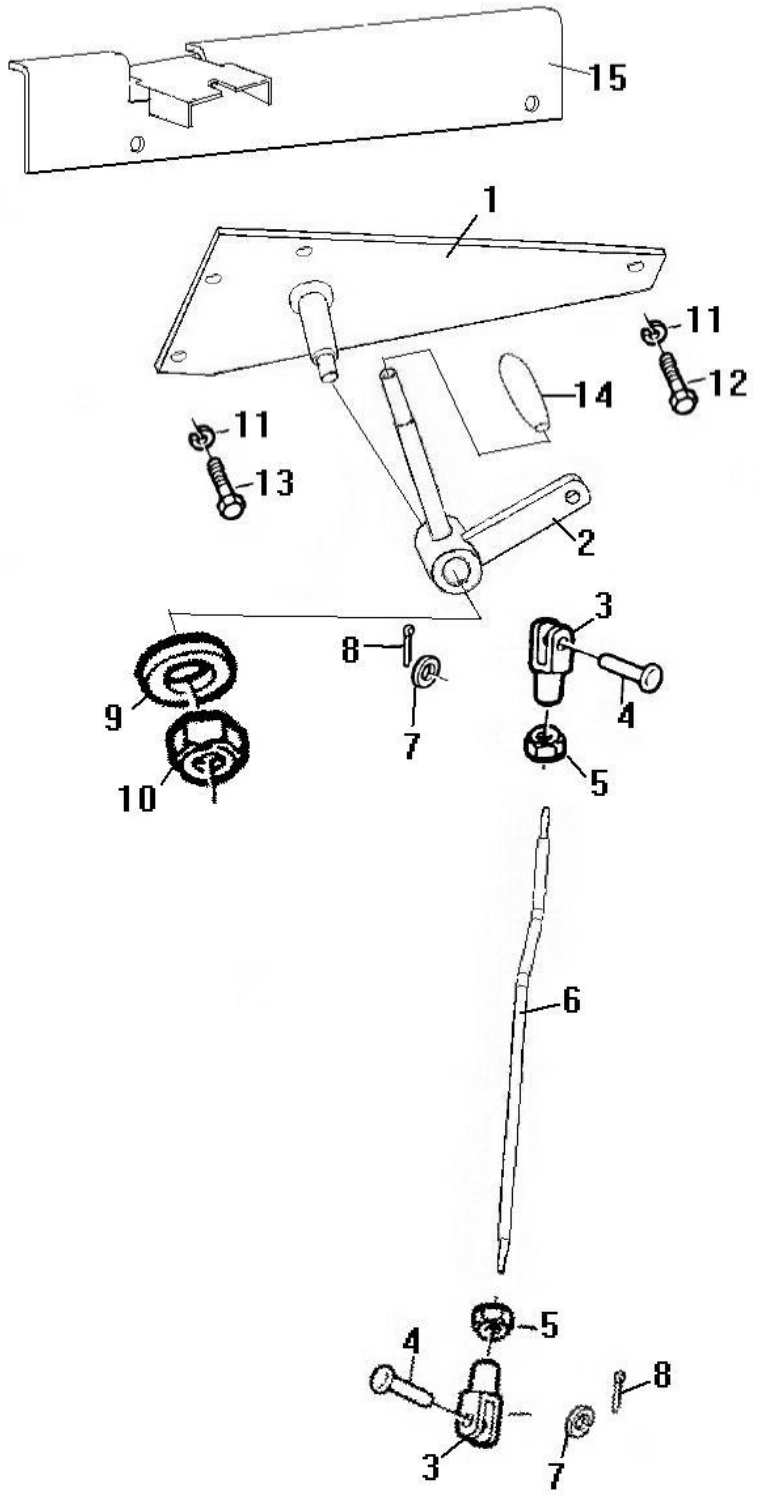

序号	件　号			数量	MODELS	备　　注
					后轮驱动	
KEY	PART NO.	名　　称	DESCRIPTION	QTY		REMARKS
1	AYC11992	支架	BRACKET	1	×	
2	AYC11995	转臂焊合	LEVER	1	×	
3	YC11770	叉头	YOKE	2	×	
4	YC11774	销轴	PIN	2	×	
5	14M7140	螺母	NUT	2	×	M10 GB6170-86 8 Zn.D
6	AYC11996	拉杆焊合	LEVER	1	×	3070用
	AYC11994	拉杆焊合	LEVER	1	×	3080用
7	24M7055	垫圈	WASHER	2	×	8 GB97.1-85 Zn.D
8	11M7082	开口销	CUT PIN	2	×	2.5x26 GB91-86 Zn.D
9	24M7028	垫圈	WASHER	1	×	10 GB97.1-85 Zn.D
10	14G25102	螺母	NUT	1	×	M10 GB889-86 8 Zn.D
11	12M5737	弹簧垫圈	LOCK WASHER	4	×	6 GB93-87 Zn.D
12	19G52135	螺栓	CAP SCROW	2	×	M6x35 GB5781-86 4.8 Zn.D
13	19G52120	螺栓	CAP SCROW	2	×	M6x20 GB5781-86 4.8 Zn.D
14	Z40822	棒锤型手柄	HANDLE	1	×	
15	AYC12132	锁定板焊合	LATCH	1	×	

REAR AXLE SUPPORT BRACKET
后桥连接架

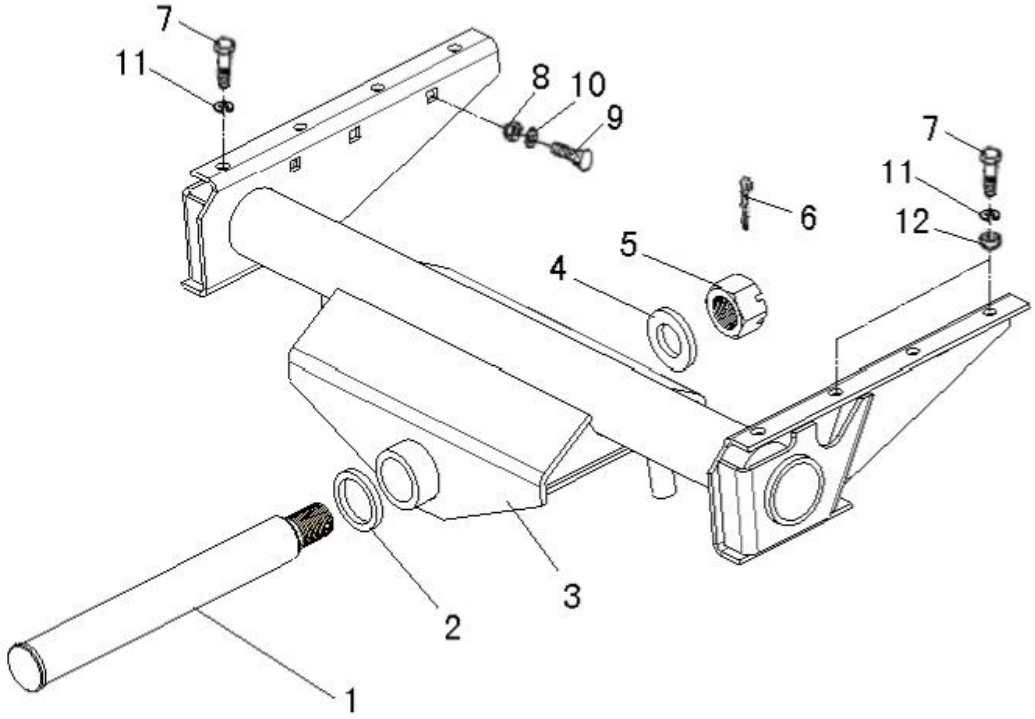

序号 KEY	件　号 PART NO.	名　称	DESCRIPTION	数量 QTY	SERIAL NO.	MODELS 后轮驱动	备　注 REMARKS
1	YC16239	后桥销轴	SHAFT	1		×	
2	YC16046	垫	WASHER	1		×	
3	AYC12060	后桥连接架	REAR AXLE SUPPORT	1		×	3080 用
	AYC12061	后桥连接架	REAR AXLE SUPPORT	1		×	3070 用
4	YC16045	垫	WASHER	1		×	
5	14G29379	螺母	NUT	1		×	M36x3 GB9459-88 5..Zn.D
6	11G02449	销	COTTON PIN	1		×	6.3x65 GB91-86 Zn.D
7	19M7285	螺栓	CAP SCREW	8		×	M12X30 GB5783-86 8.8Zn.D
8	14G25122	螺母	NUT	6		×	M12 GB889-86 8 Zn.D
9	09G04535	螺栓	CAP SCREW	6		×	M12X35 GB10-8.8 Zn.D
10	24M7047	垫圈	WASHER	6		×	12 GB97.1-85 Zn.D
11	12M7014	垫圈	LOCK WASHER	8		×	12 GB93-87 Zn.D
12	14M7031	螺母	NUT	6		×	M12 GB6170-86 8 Zn.D

REAR TIRE
后轮

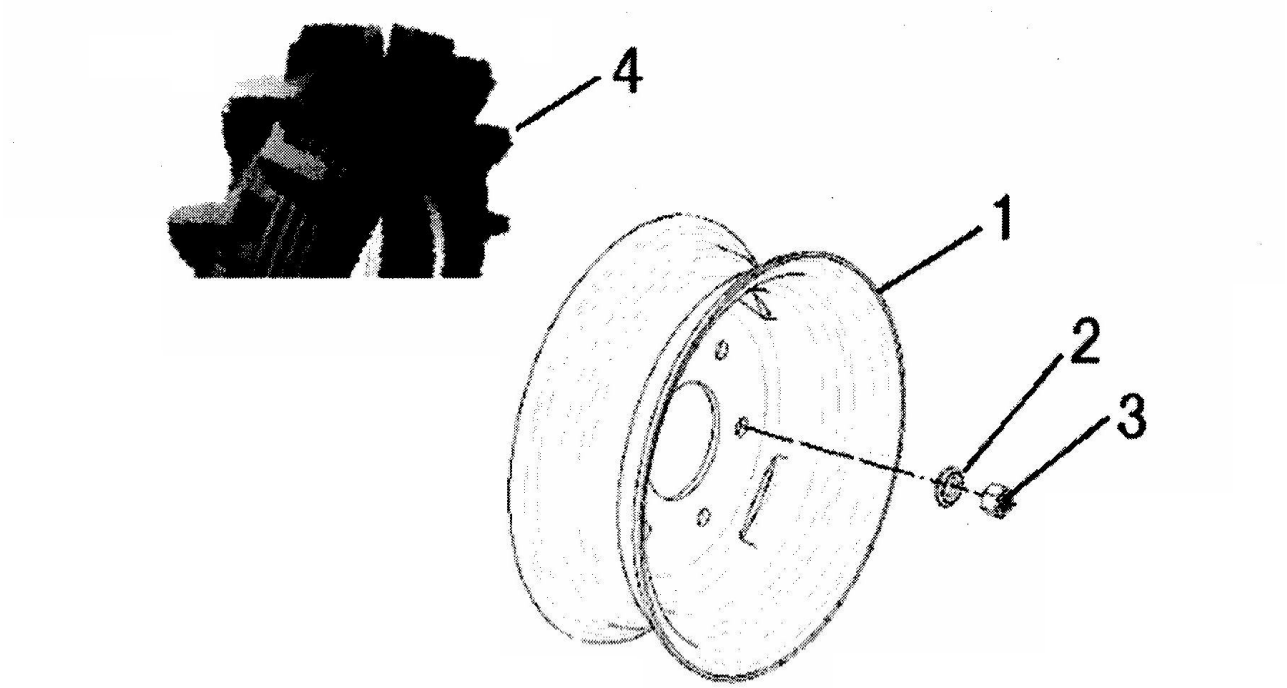

序号	件号			数量	MODELS	备注
					后轮驱动	
KEY	PART NO.	名称	DESCRIPTION	QTY SERIAL NO.		REMARKS
1	AYC12033	轮辋焊合	RIM	2	×	
2	YC16178	垫圈	WASHER	12	×	
3	YC16179	螺母	NUT	12	×	M18x1.5
4	AYC12032	轮胎	TIRE	2	×	7.50-16 水田轮胎
	S45731	外胎	COVER	2	×	7.50-16 水田轮胎
	S45732	内胎	INNER TUBE	2	×	7.50-16 水田轮胎
	S45733	衬带	FLAP	2	×	7.50-16 水田轮胎

REAR AXLE HOLDER
后桥支架

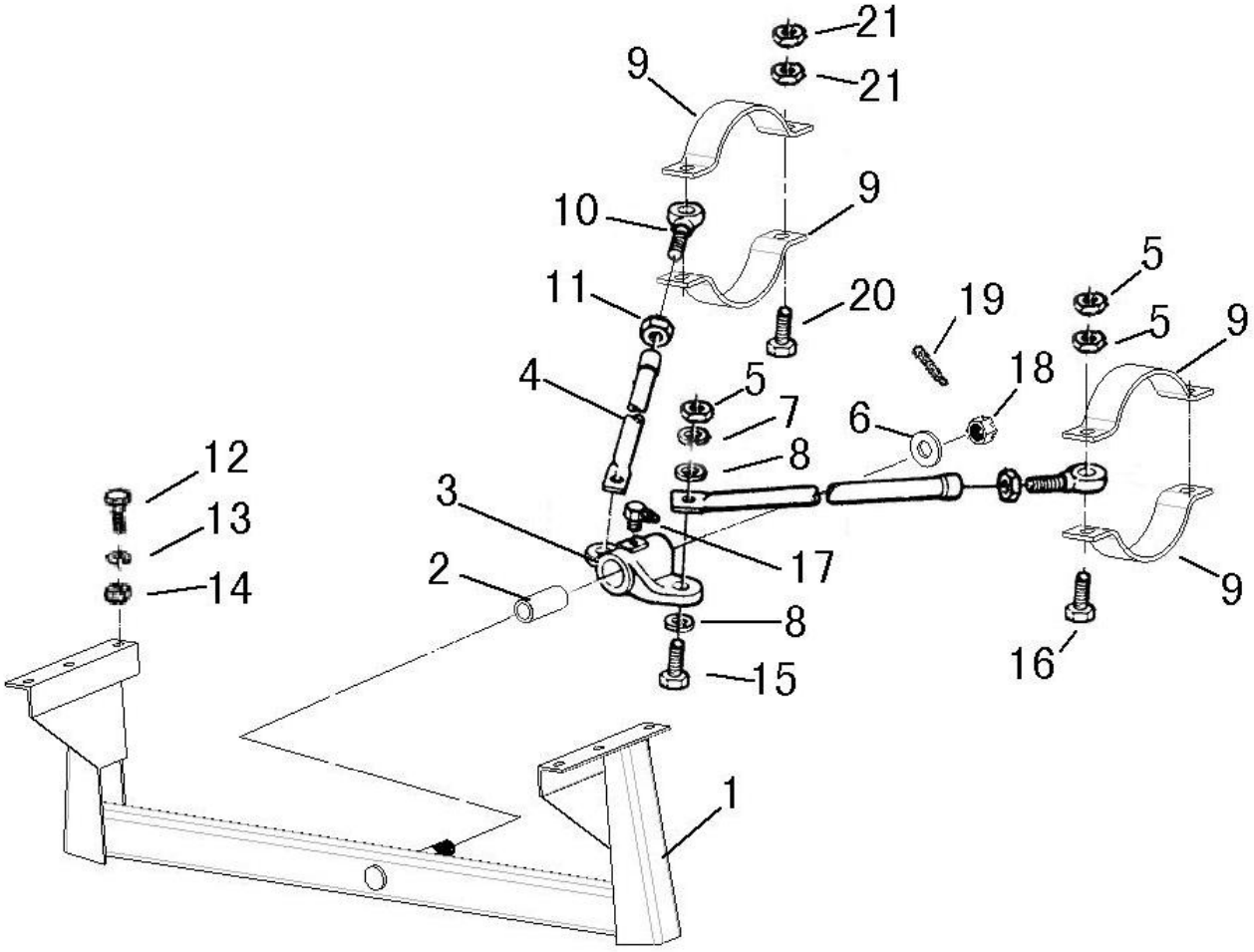

序号 KEY	件　号 PART NO.	名　　称	DESCRIPTION	数量 QTY	SERIAL NO.	MODELS 后轮驱动	备　　注 REMARKS
1	AYC12188	横梁焊合	HOLDER	1		×	3080用
	AYC10391	横梁焊合	HOLDER	1		×	3070用
2	YC16382	套	BUSHING	1		×	
3	Z10793	支承座	BEARING	1		×	
4	AYC11989	拉杆焊合	BRACE	2		×	
5	14G00162	螺母	NUT	6		×	M16 GB6170-86 8 Zn.D
6	Z26239	垫圈	WASHER	1		×	
7	12M7069	垫圈	LOCK WASHER	2		×	16 GB93-87 Zn.D
8	24M7053	垫圈	WASHER	4		×	16 GB97.1-85 Zn.D
9	YC15812	卡座	CLAMP	4		×	
10	Z36731	螺栓	BOLT	2		×	M16
11	14M7260	螺母	NUT	2		×	M16 GB6172-86 05 Zn.D
12	19M7168	螺栓	CAP SCREW	6		×	M10x30 GB5783-86 8.8Zn.D
13	12M7013	垫圈	LOCK WASHER	6		×	10 GB93-87 Zn.D
14	14M7140	螺母	NUT	6		×	M10 GB6170-86 8.8 Zn.D
15	19M7397	螺栓	CAP SCREW	2		×	M16x50 GB5783-86 8.8 Zn.D
16	19M7046	螺栓	CAP SCREW	2		×	M16x70 GB5783-86 8.8 Zn.D
17	58G30818	油杯	LUBRICATION FITTING	1		×	90° M8x1.00 GB1153-79
18	14G31209	螺母	NUT	1		×	M20 GB6181-86 05 Zn.D
19	11M7087	开口销	COTTER PIN	1		×	4X40 GB91-86 Zn.D
20	19M7389	螺栓	CAP SCREW	2		×	M12X60 GB5783-86 8.8 Zn.D
21	14M7031	螺母	NUT	2		×	M12 GB6170-86 8 Zn.D

SUPPORT BRACKET
连接架

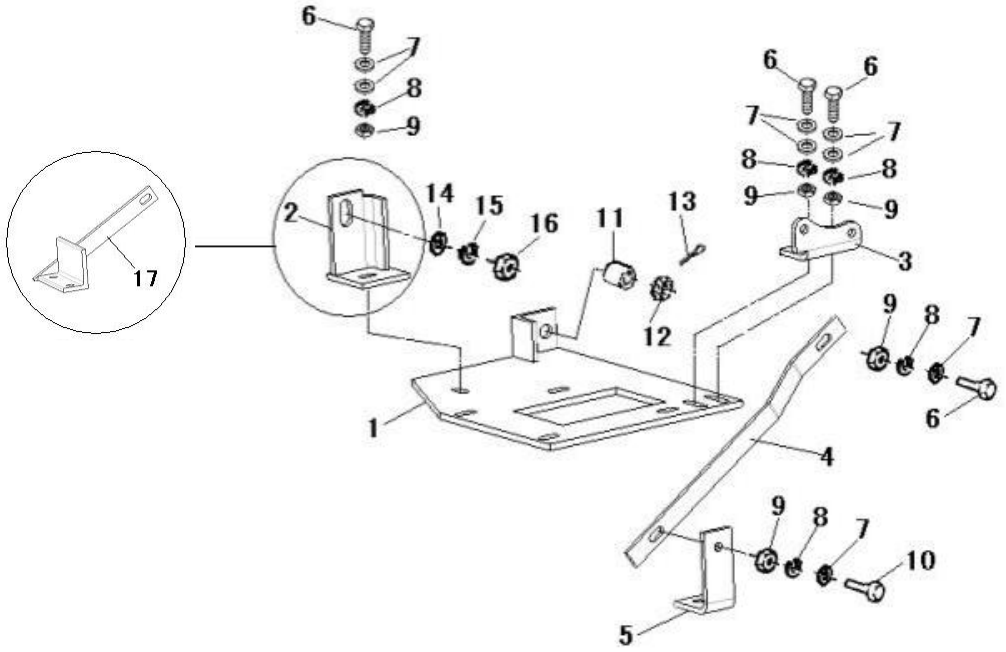

序号	件 号	名 称		数量		MODELS 后轮驱动	备 注
KEY	PART NO.		DESCRIPTION	QTY	SERIAL NO.		REMARKS
1	AYC12102	底座焊合	PEDESTAL	1		×	
2	AYC12106	支架焊合	BRACKET	1		×	3080用
3	YC16052	吊耳	BRACKET	1		×	
4	YC16059	连接板	BRACKET	1		×	
5	YC16056	吊耳	BRACKET	1		×	
6	19M7387	螺栓	CAP SCREW	4		×	M12x40 GB5783-86 8.8 Zn.D
7	24M7047	垫圈	WASHER	8		×	12 GB97.1-85 Zn.D
8	12M7014	弹簧垫圈	LOCK WASHER	5		×	12 GB93-87 Zn D
9	14M7031	螺母	NUT	5		×	M12 GB6170-86 8 Zn.D
10	19M7744	螺栓	CAP SCREW	1		×	M12X35 GB5783-86 8.8Zn.D
11	YC16055	间管	SPACER	1		×	
12	14M7185	螺母	NUT	1		×	M16 GB6178-86 8 Zn.D
13	11G02036	销	COTTON PIN	1		×	4x36 GB91-86 Zn.D
14	24G00018	垫圈	WASHER	1		×	18 GB97.1-85 Zn.D
15	12G45018	弹簧垫圈	LOCK WASHER	1		×	18 GB93-87 Zn.D
16	14G00182	螺母	NUT	1		×	M18 GB6170-86 8 Zn.D
17	AYC12121	支架焊合	BRACKET	1		×	3070用

HOLDER
支架

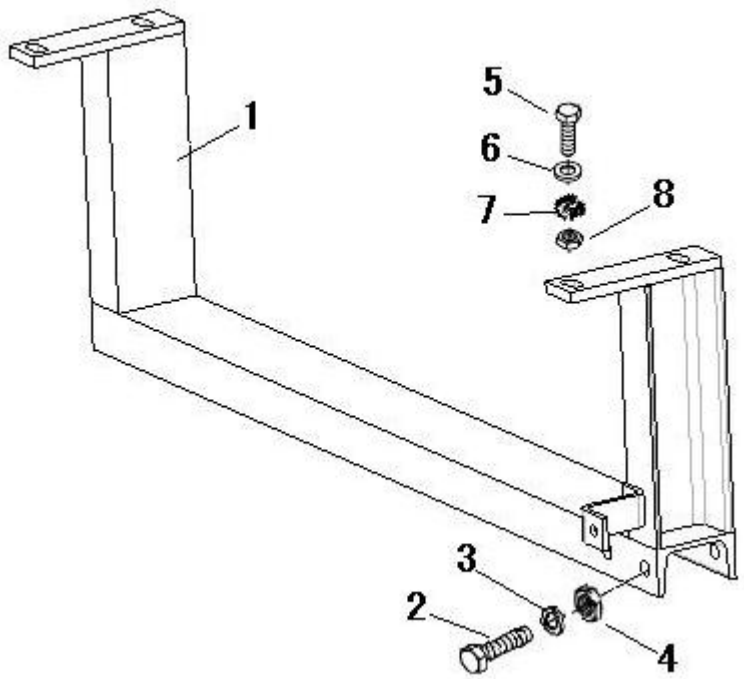

序号 KEY	件　号 PART NO.	名　称	DESCRIPTION	数量 QTY	SERIAL NO.	MODELS 后轮驱动	备　注 REMARKS
1	AYC12101	支架焊合	HOLDER	1		×	3080用
	AYC12122	支架焊合	HOLDER	1		×	3070用
2	19M7216	螺栓	CAP SCREW	2		×	M12x100 GB5782-86 8.8 Zn.D
3	12M7014	弹簧垫圈	LOCK WASHER	2		×	12 GB93-87 Zn D
4	14M7031	螺母	NUT	2		×	M12 GB6170-86 8 Zn.D
5	19M7224	螺栓	CAP SCREW	4		×	M10X45 GB5783 8.8 Zn.D
6	24M7028	垫圈	WASHER	4		×	10 GB97.1-85 Zn.D
7	12M7013	弹簧垫圈	LOCK WASHER	4		×	10 GB93-87 Zn.D
8	14M7140	螺母	NUT	4		×	M10 GB6170-86 8 Zn.D

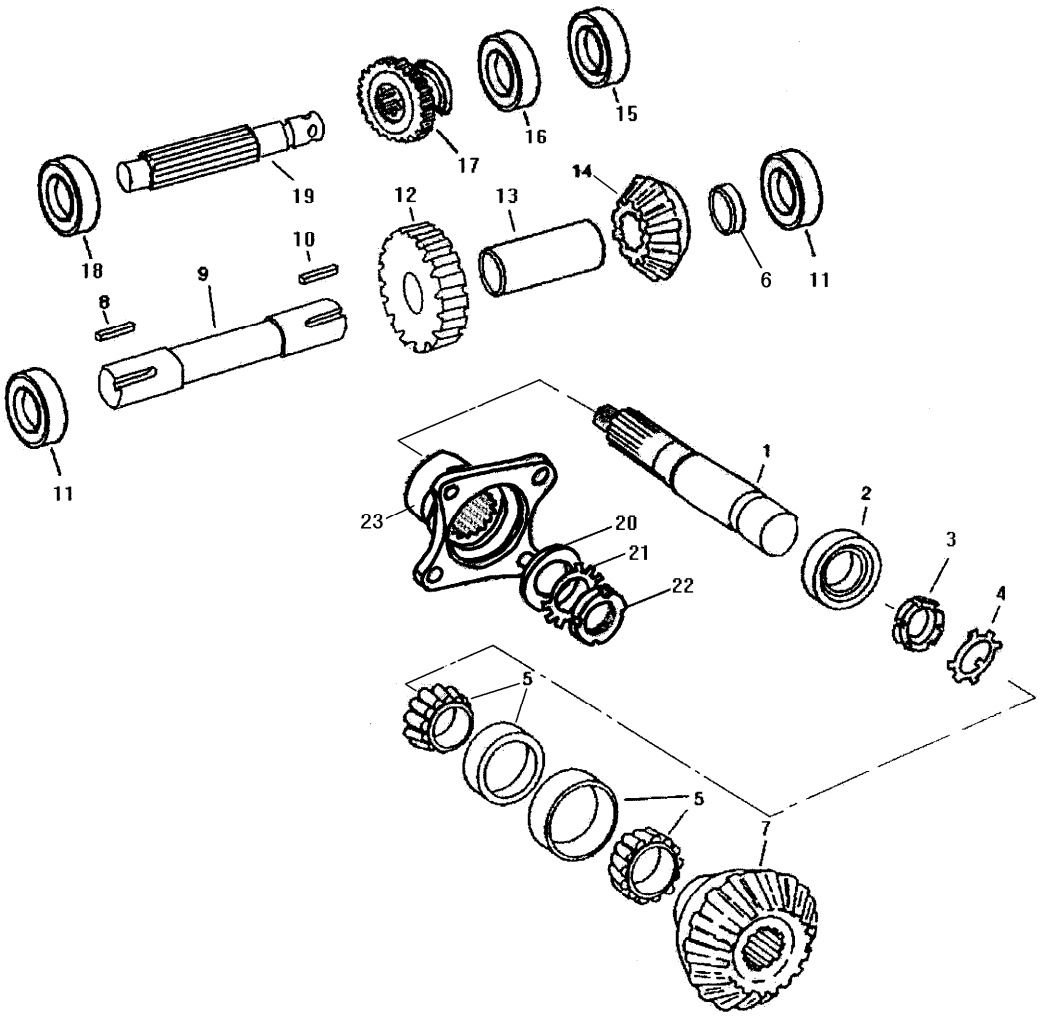
15
16
17
19
18
12
13
14
10
9
8
6
11
11
1
23
20
21
22
2
3
4
5
5
7

序号 KEY	件　号 PART NO.	名　称	DESCRIPTION	数量 QTY	SERIAL NO.	MODELS 后轮驱动	备　注 REMARKS
1	YC16259	输出轴	SHAFT	1		×	
2		油封	SEAL	1		×	60X36X12
3		圆螺母	NUT	1		×	M40X1.5 GB812-76
4		止动垫圈	WASHER	1		×	40 GB858-76
5	JD37049	轴承	BEARING	2		×	30208 GB/T297-93
6	HQ-02-04-01	间隔套	TUBE	1		×	
7	YC16260	大锥齿轮	GEAR	1		×	
8		平键	KEY	1		×	10X20 GB1096-79
9	HQ-02-12	二轴	SHAFT	1		×	
10		平键	KEY	1		×	10X30 GB1096-79
11	7307	角接触轴承	BEARING	2		×	GB/T292-93
12	YC16257	二轴齿轮	GEAR	1		×	
13	HQ-02-04-02	轴套	TUBE	1		×	
14	YC16258	小锥齿轮	GEAR	1		×	
15		油封	SEAL	1		×	55X35X10
16	13P1043	轴承	BEARING	1		×	6007 GB/T276-93
17	YC16256	一轴齿轮	GEAR	1		×	
18	4160767	轴承	BEARING	1		×	6307 GB/T276-93
19	YC16255	一轴	SHAFT	1		×	
20	24M7052	垫圈	WASHER	1		×	24 GB97.1-85 Zn.D
21	24G50024	垫圈	WASHER	1		×	24 GB858-88 Zn.D
22	52G12421	螺母	NUT	1		×	M24x1.5 GB812-88
23	YC16262	连接盘	FLANGE	1		×	

JOINTED SHAFT ASSEMBLY
传动轴总成

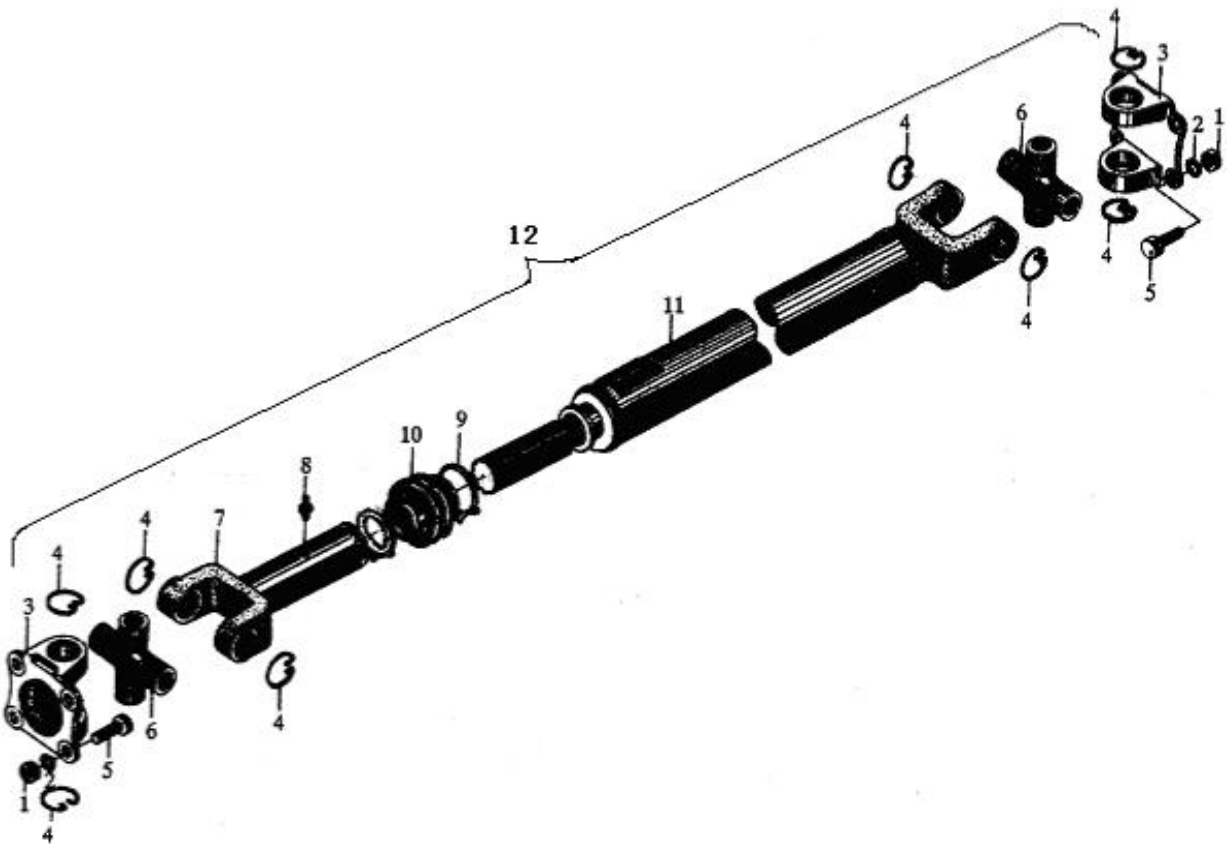

序号 KEY	件　号 PART NO.	名　称	DESCRIPTION	数量 QTY	SERIAL NO.	MODELS 后轮驱动	备　注 REMARKS
1	14M7140	螺母	NUT	16		×	M10 GB6170-86 8 Zn.D
2	12M7013	弹簧垫圈	LOCK WASHER	16		×	10 GB93-87Zn.D
3	65S-2201023	连接盘	FLANGE	2		×	
4	65S-2201051B	卡圈	SNAP RING	2		×	
5	19M7168	螺栓	CAP SCREW	16		×	M10X30 GB5783-86 8.8Zn.D
6	65S-2201025	十字轴	CROSS ASSEMBLY	2		×	
7	65S-2201061	连接叉总成	YOKE WITH TUBE	1		×	
8	58G21010	油杯	GREASE NIPPLE	1		×	M10X1 GB1152-89
9	65S-2201091	紧固圈	LOCK RING	2		×	
10	65S-2201090	保护套	GUARD SLEEVE	1		×	
11		传动轴	SHAFT ASSEMBLY	1		×	短(SHORT)
		传动轴	SHAFT ASSEMBLY	1		×	长(LONG)
12	AYC12104	传动轴总成	UNIVERSAL-JOINT	1		×	短(SHORT)
	AYC12189	传动轴总成	UNIVERSAL-JOINT	1		×	长(LONG)

FLANGE ASSEMBLY
连接法兰总成

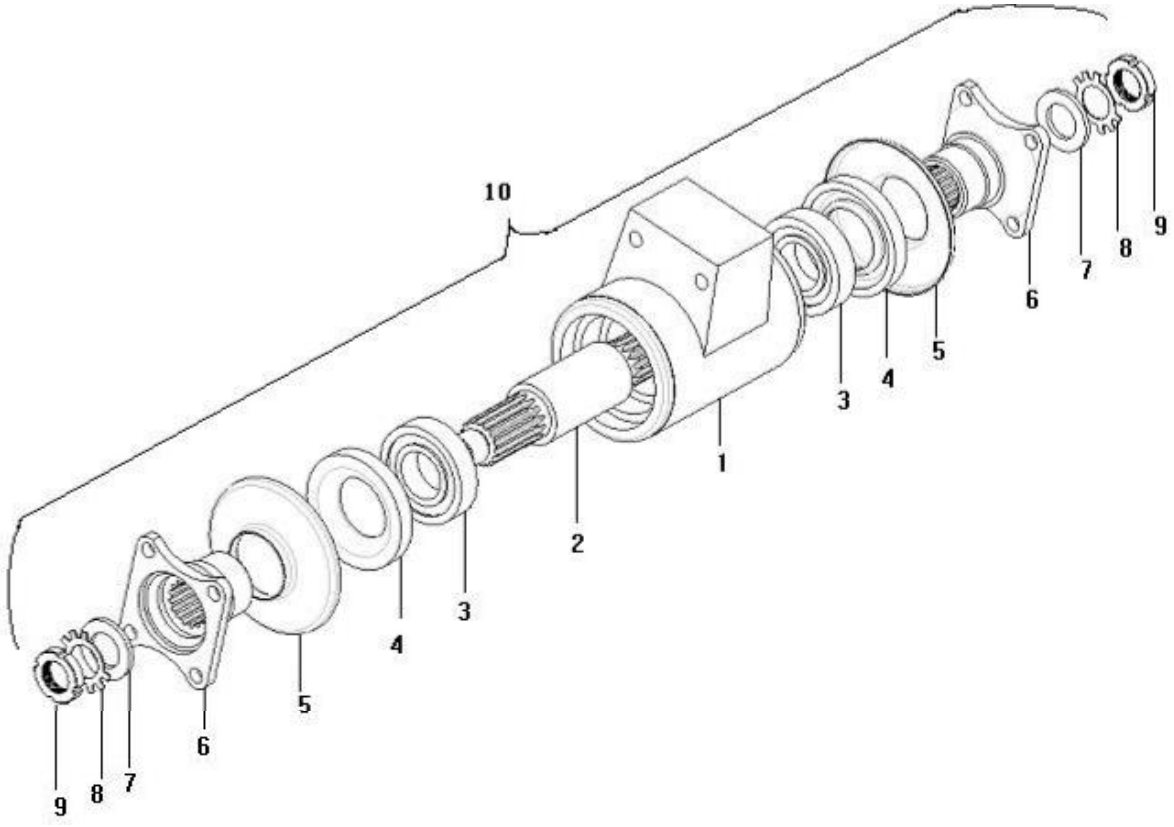

序号 KEY	件　号 PART NO.	名　称	DESCRIPTION	数量 QTY	SERIAL NO.	MODELS 后轮驱动	备　注 REMARKS
1	S46884	轴承座	BEARING SEAT	1		×	
2	S46883	轴	SHAFT	1		×	
3	00G207	轴承	BEARING	2		×	207 GB276-82
4		油封	OIL SEAL	2		×	SD84X45X12 JB2600-80
5	S46886	防护罩	SHIELD	2		×	
6	S46885	连接盘	FLANGE	2		×	
7	24G7052	垫圈	WASHER	2		×	24 GB97.1-85 Zn.D
8		垫圈	GREASE NIPPLE	2		×	24 GB858-88 Zn.D
9	52G12421	螺母	NUT	2		×	M24X1.5 GB812-88
10	AYC12105	连接法兰总成	FLANGE ASSEMBLY	1		×	

BRAKE HUB ASSEMBLY
制动毂装配

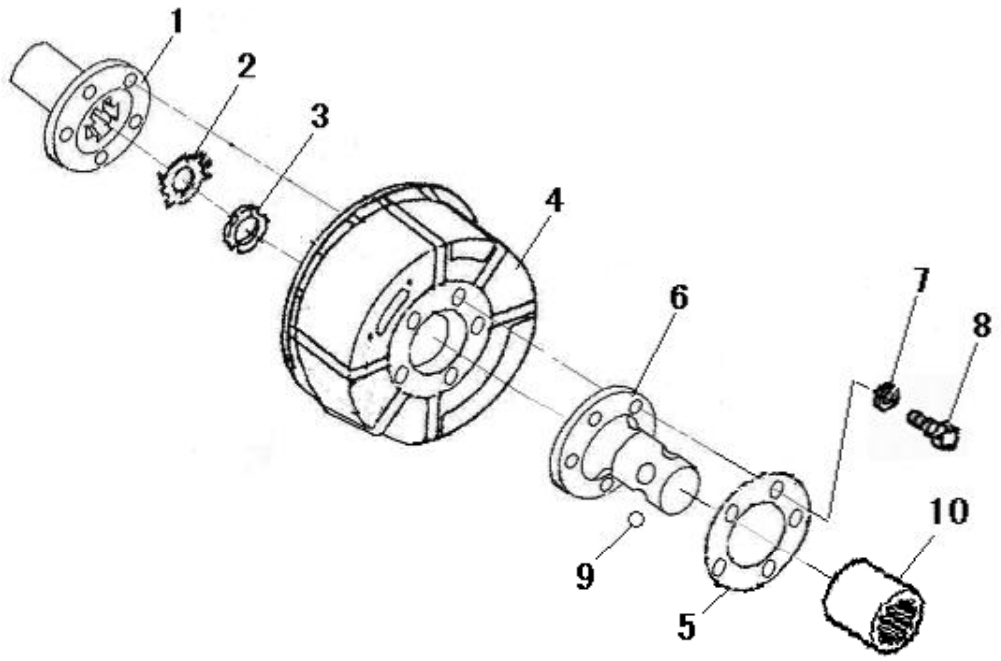

序号 KEY	件　号 PART NO.	名　称	数量 DESCRIPTION	QTY SERIAL NO.	MODELS 后轮驱动	备　注 REMARKS
1	YC16079	制动毂	HUB	1	×	
2	D40444	垫圈	WASHER	1	×	30 GB858-88 Zn.D
3	52G03021	螺母	BALL STUD	1	×	M30x1.5 GB810-88
4	YC12076	花键毂	CASE	1	×	
5	YC16090	锁片	WASHER	1	×	
6	YC16058	万向节接盘	HUB	1	×	
7	12M7014	垫圈	LOCK WASHER	5	×	10 GB93-87 Zn.D
8	19G02340	螺栓	BOLT	5	×	M10x40 GB5782-86 8.8 Zn.D
9	00G00049	钢球	BALL	8	×	13.5 GB308-84
10	YC16057	万向节轴套	SLEEVE	1	×	3080用
	AYC11990	万向节轴套	SLEEVE	1	×	3070用

REAR AXLE ASSEMBLY (RWD)
后桥总成(后轮驱动)

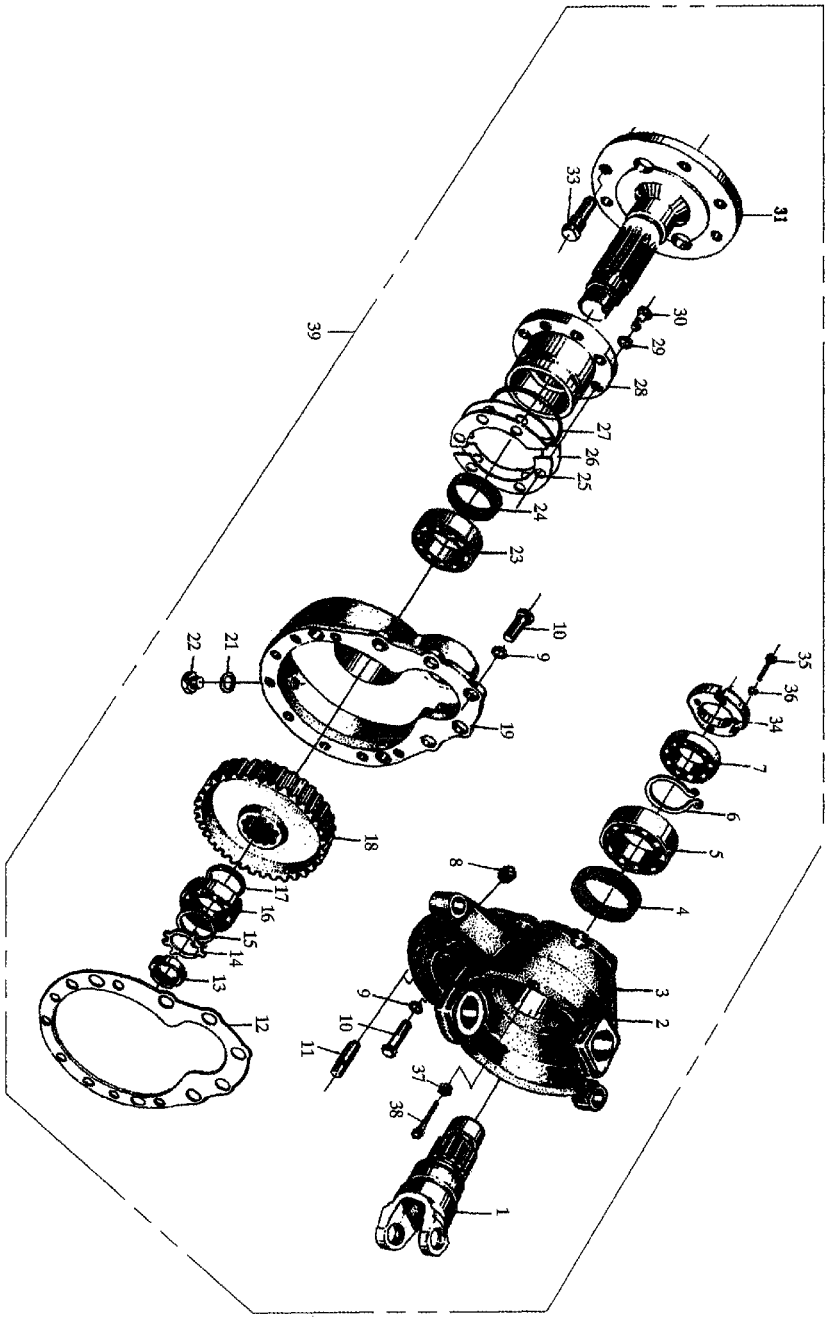

序号	件　号			数量		MODELS	备　注
KEY	PART NO.	名　称	DESCRIPTION	QTY	SERIAL NO.	后轮驱动	REMARKS
1	65S-2302004B	齿轮	DRIVING GEAR	2		×	
2	65S-2302023E1	齿轮箱盖-右	GEAR BOX COVER-R	1		×	
3	65S-2302001E	齿轮箱盖-左	GEAR BOX COVER-L	1		×	
4		骨架油封	OIL SEAL	2		×	FB80X100X12D GB/T9877.1-88
5		向心球轴承	BALL BEARING	2		×	6014 GB/T276-94
6		挡圈	SNAP RING,FOR AXLE	2		×	70 GB894.1-86
7		轴承	BEARING	2		×	NJ307 GB/T283-94
8		螺塞	PLUG	2		×	3/8″ Q/TB105-93
9	12M7014	弹簧垫圈	SPRINGWASHER	26		×	12 GB93-87 Zn.D
10	19M7387	螺栓	BOLT	26		×	M12x40 GB5783-86 8.8 Zn.D
11	65S-2302026	定位销	DOWEL PIN	4		×	
12	65S-2302002C	纸垫	PAPER GASKET	2		×	
13	65S-2302024	圆螺母	BALL NUT	2		×	M45X1.5
14		止推垫圈	THRUST WASHER	2		×	45 GB858-88
15	65S-2302018B	垫圈	WASHER	2		×	
16		轴承	BEARING	2		×	32210 GB/T297-94
17	65S-2302021	间隙垫圈	SPACING WASHER	2		×	
18	65S-2302005	从动齿轮	DRIVEN GEAR	2		×	
19	65S-2302003B	边减箱体	GEAR BOX HOUSING	2		×	
21		垫圈	WASHER	2		×	20 JB982
22	65S-2300022A	螺塞	PLUG	2		×	
23		轴承	BEARING	2		×	32212 GB/T297-94
24		骨架油封	OIL SEAL	2		×	FB70X95X10D GB/T9877.1-88
25	65S-2302007B	调整垫片	ADJUSTING SHIM	8		×	
26	65S-2302006B	调整垫片	ADJUSTING SHIM	24		×	
27		O 形密封圈	O-RING	2		×	100X3.1 Q/TB115-2001
28	65S-2302022B	轴承套	BEARING SLEEVE	2		×	
29	12M7013	弹簧垫圈	SPRING WASHER	12		×	10 GB93-87 Zn.D
30	19G01330	螺栓	BOLT	12		×	M10x30 GB5781-86 4.6 Zn.D
31	65S-2302009	从动轴	DRIVEN AXLE	2		×	
33	65S-2302012B	后轮螺栓	BOLT,REAR RIM	12		×	
34	65S-2302028	轴承盖	BEARING COVER	2		×	
35	19G01225	螺栓	BOLT	8		×	M8x25 GB5781-86 4.6 Zn.D
36	12M7008	弹簧垫圈	SPRING WASHER	8		×	8 GB93-87 Zn.D
37	14M7260	螺母	NUT	2		×	M16 GB6172-86 05 Zn.D
38	19M7283	螺栓	BOLT	2		×	M16x35 GB5783-86 8.8 Zn.D
39	65S-2302010C	左最终传动总成	LEFT FINAL DRIVE	1		×	
	65S-2302020C	右最终传动总成	RIGHT FINAL DRIVE	1		×	

REAR AXLE ASSEMBLY (RWD)
后桥总成(后轮驱动)

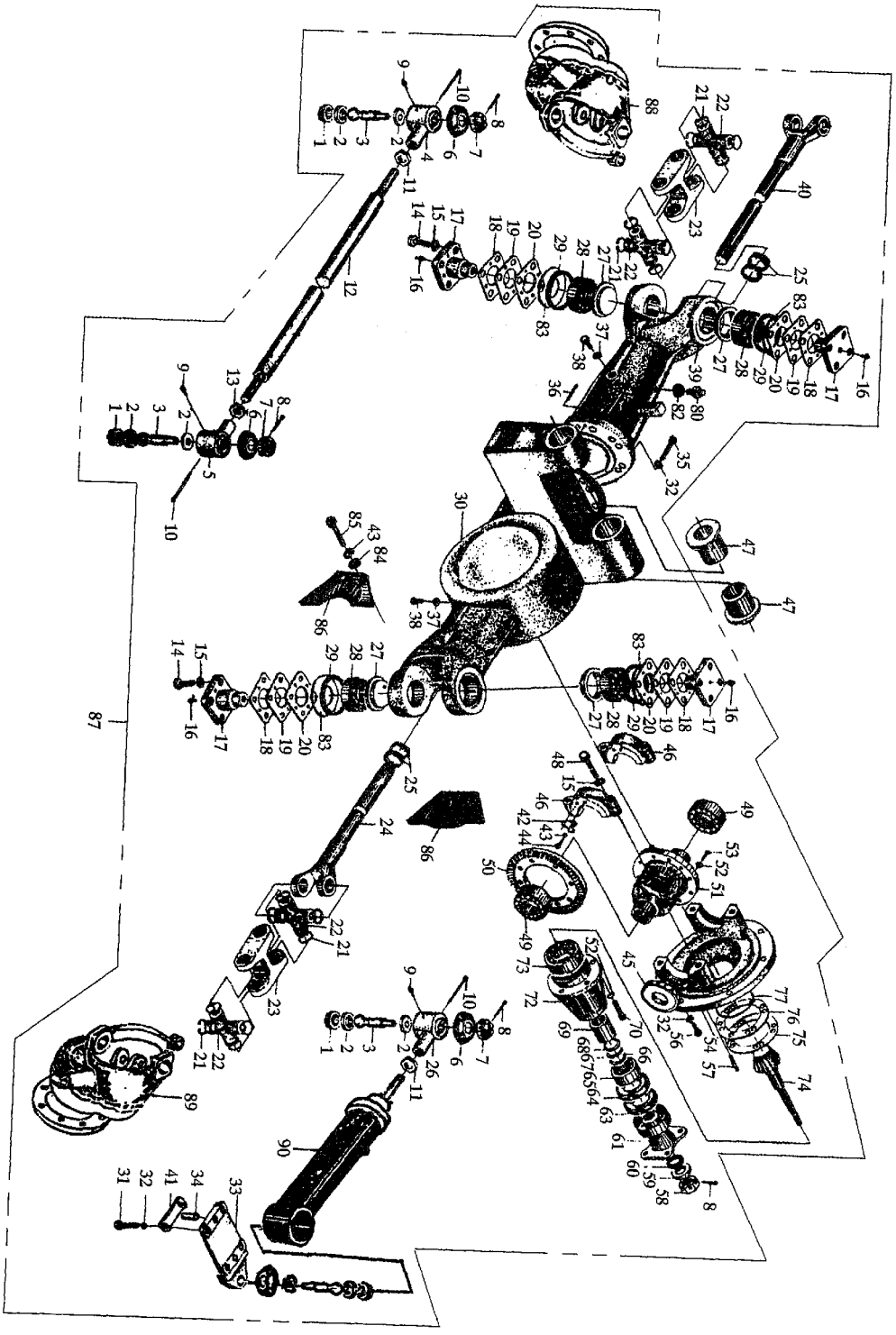

序号 KEY	件　号 PART NO.	名　　称	DESCRIPTION	数量 QTY	SERIAL NO.	MODELS 后轮驱动	备　　注 REMARKS
1	36-3003018B	调节螺塞	ADJUSTING PLUG	4		×	
2	45-3003020	垫圈	BALL FACE WASHER	8		×	
3	36-3003025B	球头螺栓	BALL STUD	4		×	
4	65S-3003016C1	横拉杆右接头	RIGHT END	2		×	
5	65S-3003017C1	横拉杆右接头	LEFT END	1		×	
6	55-3003033B	密封罩	SEALING CAP	4		×	
7		开槽螺母	SLOTTED NUT	4		×	M20X1.5 Q/TB118-92
8	11M7087	开口销	COTTER PIN	5		×	4X40 GB91-86
9		油杯	GREASE NIPPLE	4		×	M10X1 GB/T7940.1
10		开口销	COTTER PIN	4		×	5X80 GB91-86
11	45B-3003147	螺母	NUT	2		×	
12	65S-2304005B	拉杆总成	TUBE ASEMBLE	1		×	
13	36-3003029	螺母	NUT,LEFT SCREW	1		×	45B-3003147
14		螺栓	BOLT	16		×	M14X35-9.8 GB5783-86
15	12M7068	弹簧垫圈	LOCK WASHER	20		×	14 GB93-87 Zn.D
16		油杯	GREASE NIPPLE	4		×	M10X1-45° GB/T7940.2
17	65S-2300003B	连接法兰	CONNECTING FLANGE	4		×	
18	65S-2300017A	调整垫片	ADJUSTING SHIM	16		×	0.1
19	65S-2300018A	调整垫片	ADJUSTING SHIM	32		×	0.2
20	65S-2300019A	调整垫片	ADJUSTING SHIM	16		×	0.5
21		孔用挡圈	SNAP RING FOR HOLE	16		×	32 GB893.1-86
22	65S-2201025	十字头总成	CROSS ASSEMBLY	4		×	
23	65S-2300001	连接叉	CONNECTING FORK	2		×	
24	65S-2300011	左半轴	LEFT HALF AXLE	1		×	
25		油封	OIL SEAL	4		×	PG40X65X10 Q/TB121-1998
27	65S-2300007	堵盖	EXPANSION PLUG	4		×	
28		轴承	BEARING	4		×	31307 GB/T297-94
29	65S-2300028	0形密封圈	O-RING	4		×	
30	65S-2300005D1	左半壳体	LEFT HALF-HOUSING	1		×	
31		螺栓	BOLT	4		×	M12X40-9.8 GB5783-86
32	12M7014	弹簧垫圈	SPRING WASHER	24		×	12 GB93-87
33	65S-2300008B	支架	BRAKET	1		×	
34	65S-2302026	定位销	DOWEL PIN	2		×	
35		螺栓	BOLT	12		×	M12X45-9.8 GB5782-86
36		圆柱销	CYLINDRICAL PIN	2		×	D12X30　GB119-86
37		密封垫圈	SEALING WASHER	3		×	20 JB982-77
38	65S-2300022A	螺塞	PLUG	2		×	
39	65S-2300015B2	右壳体	RIGHT HALF-HOUSING	1		×	
40	65S-2300012A	右半轴	RIGHT HALF AXLE	1		×	

序号 KEY	件　号 PART NO.	名　称	DESCRIPTION	数量 QTY	SERIAL NO.	MODELS 后轮驱动	备　注 REMARKS
41	65S-2302029	锁片	LOCK PLATE	2		×	
42	65S-2303001	防松垫片	LOCK GASKET	2		×	
43	12M5737	弹簧垫圈	LOCK WASHER	10		×	6 GB93-87 Zn.D
44	19G01116	螺栓	BOLT	4		×	M6X16 GB5781-86
45	65S-2303017	调节螺塞	ADJUSTING PLUG	2		×	
46	65S-2303003	轴承盖	BEARING COVER	2		×	
47	36-3001020	轴套	BUSHING	2		×	
48	65S-2303002	螺栓	BOLT	4		×	
49		轴承	BEARING	2		×	32210 GB/T297-94
50	65S-2303021	齿轮	DRIVEN GEAR	1		×	M14X35-9.8 GB5783-86
51	65S-2303030	差速器总成	DIFFERENTIAL	1		×	
52	19M7168	弹簧垫圈	SPRING WASHER	16		×	10 GB93-87
53	19G08525	螺栓	BOLT	10		×	M10X25 GB5783-86
54	65S-2303015	差速器支架	HOUSING	1		×	
56		螺栓	BOLT	12		×	M12X30-9.8 GB5783-86
57		圆柱销	CYLINDRICAL PIN	2		×	D12X30　GB119-86
58		开槽螺母	SLOTTED NUT	1		×	M20X1.5 Q/TB120-92
59	65S-1800021	垫圈	WASHER	1		×	
60	65S-1800022	橡胶垫圈	RUBBER WASHER	1		×	
61	65S-1800020	法兰总成	FLANGE ASSEMBLY	1		×	
63		油封	OIL SEAL	1		×	SG45X75X12 Q/TB121-1998
64		油封	OIL SEAL	1		×	PG45X75X12 Q/TB121-1998
65		轴承	BEARING	1		×	32306 GB/T297-94
66	65S-2303013	调整垫片	ADJUSTING SHIM	2		×	
67	65S-2303012	调整垫片	ADJUSTING SHIM	4		×	
68	65S-2303011	调整垫片	ADJUSTING SHIM	4		×	
69	65S-2303008	间隔套	SPACING SLEEVE	1		×	
70	19M7168	螺栓	BOLT	6		×	M10X30 GB5783-86
72	65S-2303014	轴承套	BEARING SLEEVE	1		×	
73		轴承	BEARING	1		×	32209 GB/T297-94
74	65S-2303016	齿轮	DRIVING PINION	1		×	
75	65S-2303005	调整垫片	ADJUSTING SHIM	8		×	
76	65S-2303004	调整垫片	ADJUSTING SHIM	16		×	
77		O 形密封圈	O-RING	1		×	100X3.1 Q/TB115-2001
80	65S-2300002	通气塞总成	PLUG ASSEMBLY	1		×	
82	65S-2300026A	通气孔座	SEAT,VENT HOLE	1		×	
83	65S-2300027	防尘盖	DUST COVER	4		×	
84	24G00006	垫圈	WASHER	8		×	6 GB97.1-85
85		螺钉	SCREW	8		×	M6X12 GB818-85

序号 KEY	件　号 PART NO.	名　　称	DESCRIPTION	数量 QTY	SERIAL NO.	MODELS 后轮驱动	备　　注 REMARKS
86	65S-2300036	防尘盖	DUST COVER	4		×	
87	AYC12031	驱动桥总成	AXLE ASSEMBLY	1		×	
88	65S-2302010C	左最终传动总成	LEFT FINAL DRIVE	1		×	
89	65S-2302020C	右最终传动总成	RIGHT FINAL DRIVE	1		×	
90	65-3405050	转向油缸	STEERING CYLINDER	1		×	

TRANSMISSION SHELL ASSEMBLY
变速箱壳体装配

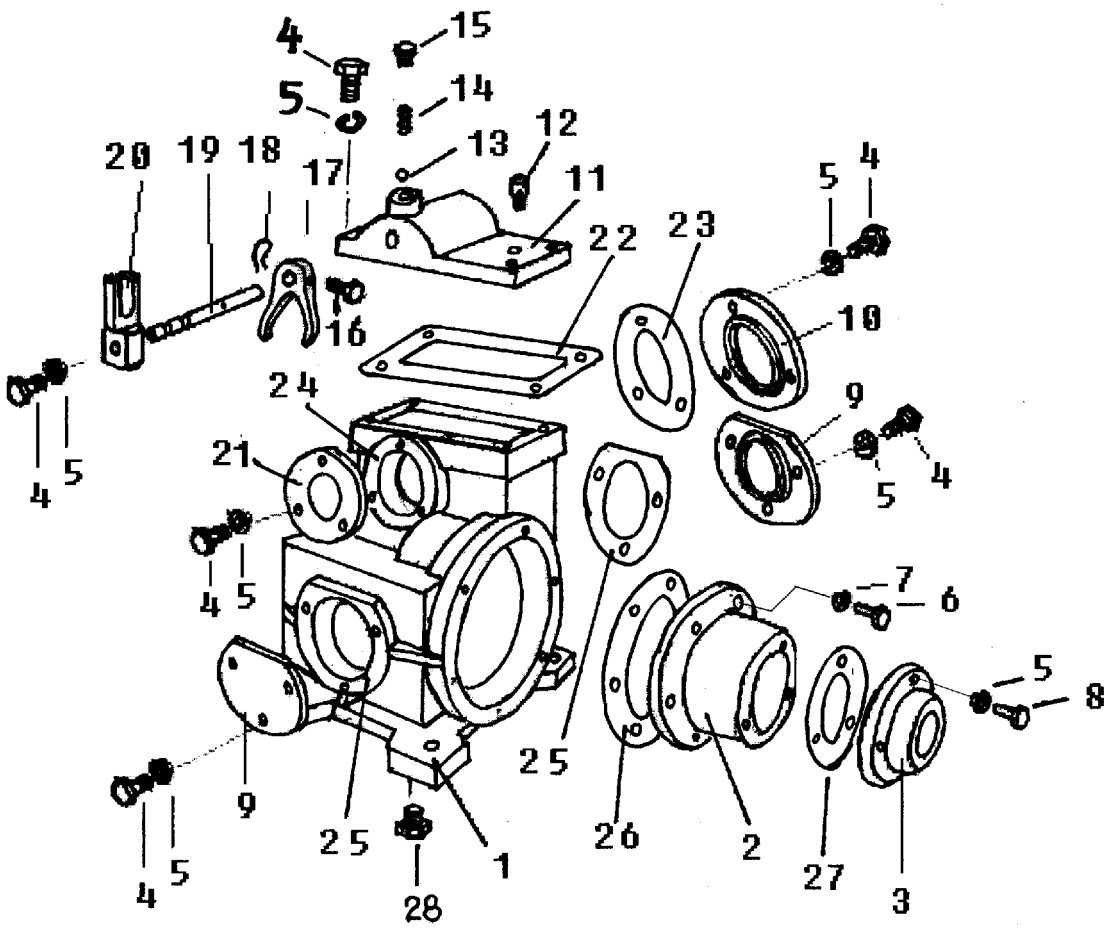

序号 KEY	件　号 PART NO.	名　　称	DESCRIPTION	数量 QTY	SERIAL NO.	MODELS 后轮驱动	备　　注 REMARKS
1	YC16261	箱体	BOX SHELL	1		×	
2	HQ-02-17	轴承座	BEARING COVER	1		×	
3	HQ-02-19	轴承座	BEARING COVER	1		×	
4	19G08425	螺栓	CAP SCREW	16		×	M8X25 GB5783-86 8.8Zn.D
5	12M7008	弹簧垫圈	LOCK WASHER	19		×	8 GB93-87Zn.D
6	19M7168	螺栓	CAP SCREW	6		×	M10X30 GB5783-86 8.8Zn.D
7	12M7014	弹簧垫圈	LOCK WASHER	6		×	10 GB93-87Zn.D
8	19G08430	螺栓	CAP SCREW	3		×	M8X30 GB5783-86 8.8Zn.D
9	HQ-02-07-1	轴承盖	BEARING COVER	2		×	
10	HQ-02-07	轴承盖	BEARING COVER	1		×	
11	HQ02-01	箱盖	BOX COVER	1		×	
12		放气阀	BREATHER	1		×	ZG1/8″
13		钢球	BOLL	1		×	Φ10
14	HQ-02-10	塞座	COVER	1		×	
15	HQ-02-11	弹簧	SPRING	1		×	
16	HQ═01-03	顶丝	THREAD	1		×	
17	YC16254	拨叉	SHIFTER	1		×	
18		铁丝	IRON	0.1m		×	Φ1
19	HQ-02-24	拨叉轴	ROD	1		×	
20	HQ-02-36-2	拨叉座	SEAT	1		×	
21	HQ-02-09	轴承盖	BEARING COVER	1		×	
22	HQ-03-06	纸垫	SHIM	1		×	
23	HQ-03-03	纸垫	SHIM	2		×	
24	HQ-03-01	纸垫	SHIM	2		×	
25	HQ-03-02	纸垫	SHIM	4		×	
26	HQ-03-05	纸垫	SHIM	4		×	
27	HQ-03-04	纸垫	SHIM	2		×	
28	YC11820	油塞	PIPE PLUG	1		×	ZG3/4″

HYDRAULIC LINE
液压管路（转向系统）

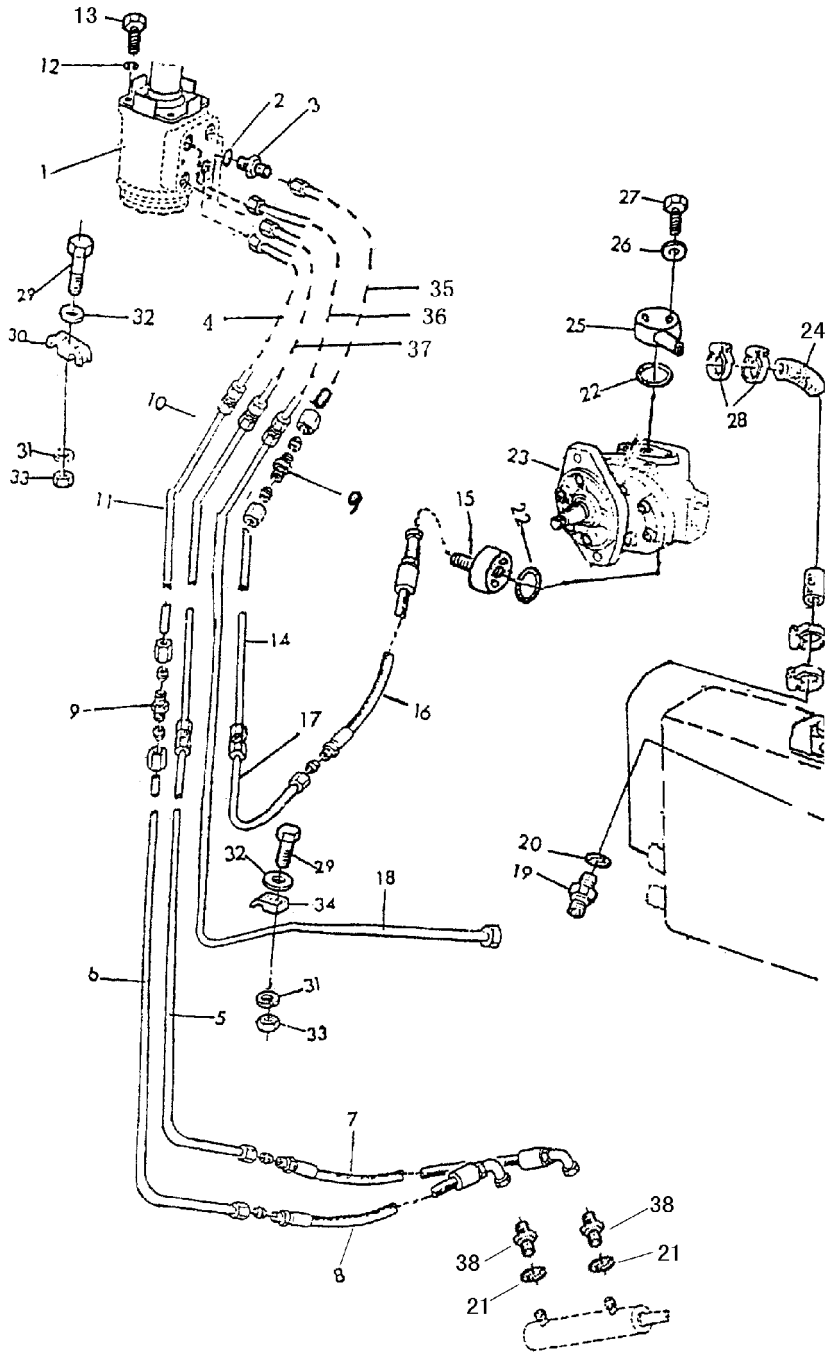

序号 KEY	件　号 PART NO.	名　称	DESCRIPTION	数量 QTY	SERIAL NO.	MODELS 后轮驱动	备　注 REMARKS
1	AYC10933	转向机总成	STEEING METERING PUMP	1		×	
2	YC16295	密封圈	SEAL	4		×	20
3	YC16294	接头体	FITTING	2		×	
4	AS41653	转向油管	LINE	1		×	
5	AS45703	转向油管	LINE	1		×	3070用
	AS45709	转向油管	LINE	1		×	3080用
6	AS45705	转向油管	LINE	1		×	3070用
	AS45707	转向油管	LINE	1		×	3080用
7	AYC10671	高压软管	HYDRAULIC.HOSE	1		×	
8	AZ25674	高压软管	HYDRAULIC.HOSE	1		×	
9	YC16844	接头体	FITTING	7		×	
10	AS41783	转向油管	LINE	1		×	
11	AS41781	转向油管	LINE	1		×	
12	12M7013	垫圈	WASHER	4		×	10 GB93-87 Zn.D
13	19G02340	螺栓	CAP SCREW	4		×	M10x40 GB5782-86 8.8Zn.D
14	AS41657	转向油管	LINE	1		×	
15	YC11597	法兰接头	UNION FITTING	1		×	
16	AYC12814	高压软管	HYDRAULIC.HOSE	1		×	
17	AS41791	转向油管	LINE	1		×	
18	AS41793	转向油管	LINE	1		×	
19	YC12264	接头体	FITTING	1		×	
20	YC13010	密封圈	SEAL	1		×	18 JB1002-77
21	YC14891	铜垫	WASHER	2		×	
22	YC13005	O 型圈	O—RING	1		×	26X24 GB1235-76
23	AYC10755	双联泵	HYDRAULIC.HOSE PUMP	1		×	
24	YC12382	吸油管	OIL LINE	1		×	
25	AYC10471	法兰接头焊合	UNION FITTING	1		×	
26	12M7008	垫圈	WASHER	2		×	8 GB93-87 Zn.D
27	19G02240	螺栓	CAP SCREW	2		×	M18X35 GB5782-86 8 Zn.D
28	YC13988	夹子	CLAMP	2		×	
29	19G00135	螺栓	CAP SCREW	AR		×	M6X35 GB5780-86 8.6 Zn.D
30	Z34955	夹子	CLAMP	AR		×	
31	12M5737	垫圈	WASHER	AR		×	6 GB93-87 Zn.D
32	24G00006	垫圈	WASHER	AR		×	6 GB97-85 Zn.D
33	14G14060	螺母	NUT	AR		×	M6 GB41-86 5 Zn.D
34	Z34952	夹子	CLAMP	AR		×	
35	AS41649	转向油管	LINE	1		×	
36	AS41651	转向油管	LINE	1		×	
37	AS41655	转向油管	LINE	1		×	
38	YC14890	接头体	FITTING	2		×	

索　　引 (INDEX)

件　　号	序号	页　　号	件　　号	序号	页　　号
00G00049	9	140-16	00G7506EA	8	60-8
00G111208	33	100-4	00G7506EB	7	60-8
00G111209	6	130-6	00G7514E	11	50-20
00G11207	19	100-4	00G7514E	14	50-9
00G117	6	110-44	00G8109	10	60-4
00G160206	3	50-4	00G986711	1	50-6
00G160206	12	110-24	00GP503	10	30-8
00G160206	3	110-26	00GP505	11	110-16
00G160207	33	50-6	00GP505	9	110-30
00G160208	4	50-2	00GP505	12	120-6
00G160209	6	50-2	00GP505	11	120-8
00G180203	7	30-6	00GP505	15	120-10
00G180203	43	110-24	00GP505	21	120-20
00G180203		110-50	00GP506	17	120-4
00G180303	10	130-10	00GP506	25	120-8
00G2007109A	2	60-8	00GP506	16	120-16
00G2007109B	3	60-8	00GP506	9	120-22
00G206	38	50-13	00GP507	5	110-16
00G207	9	50-9	00GP507	13	110-44
00G207	69	50-13	00GP508	7	110-4
00G207	3	140-15	00GP508	10	110-12
00G209	32	50-12	00GP508	12	110-22
00G308	4	50-12	36-3001020	47	140-21
00G390203	8	30-8	36-3003018B	1	140-20
00G390205	10	110-16	36-3003025B	3	140-20
00G390205	8	110-30	36-3003029	13	140-20
00G390205	9	120-6	45-3003020	2	140-20
00G390205	10	120-8	45B-3003147	11	140-20
00G390205	14	120-10	55-3003033B	6	140-20
00G390205	19	120-20	65-3405050	90	140-22
00G390206	16	120-4	65S-1800020	61	140-21
00G390206	24	120-8	65S-1800021	59	140-21
00G390206	18	120-16	65S-1800022	60	140-21
00G390206	6	120-22	65S-2201023	3	140-14
00G390207	4	110-16	65S-2201025	6	140-14
00G390207	14	110-44	65S-2201025	22	140-20
00G390208	6	110-4	65S-2201051B	4	140-14
00G390208	9	110-12	65S-2201061	7	140-14
00G390208	13	110-22	65S-2201090	10	140-14
00G390507	28	100-4	65S-2201091	9	140-14
00G50206	44	50-13	65S-2300001	23	140-20
00G50208	27	50-12	65S-2300002	80	140-21
00G50308	12	50-12	65S-2300003B	17	140-20
00G60205	3	110-50	65S-2300005D1	30	140-20
00G6209	11	30-12	65S-2300007	27	140-20

索　　引 (INDEX)

件　　号	序号	页　　号
65S-2300008B	33	140-20
65S-2300011	24	140-20
65S-2300012A	40	140-20
65S-2300015B2	39	140-20
65S-2300017A	18	140-20
65S-2300018A	19	140-20
65S-2300019A	20	140-20
65S-2300022A	22	140-18
65S-2300022A	38	140-20
65S-2300026A	82	140-21
65S-2300027	83	140-21
65S-2300028	29	140-20
65S-2300036	86	140-22
65S-2302001E	3	140-18
65S-2302002C	12	140-18
65S-2302003B	19	140-18
65S-2302004B	1	140-18
65S-2302005	18	140-18
65S-2302006B	26	140-18
65S-2302007B	25	140-18
65S-2302009	31	140-18
65S-2302010C	39	140-18
65S-2302010C	88	140-22
65S-2302012B	33	140-18
65S-2302018B	15	140-18
65S-2302020C		140-18
65S-2302020C	89	140-22
65S-2302021	17	140-18
65S-2302022B	28	140-18
65S-2302023E1	2	140-18
65S-2302024	13	140-18
65S-2302026	11	140-18
65S-2302026	34	140-20
65S-2302028	34	140-18
65S-2302029	41	140-21
65S-2303001	42	140-21
65S-2303002	48	140-21
65S-2303003	46	140-21
65S-2303004	76	140-21
65S-2303005	75	140-21
65S-2303008	69	140-21
65S-2303011	68	140-21
65S-2303012	67	140-21
65S-2303013	66	140-21
65S-2303014	72	140-21
65S-2303015	54	140-21
65S-2303016	74	140-21
65S-2303017	45	140-21
65S-2303021	50	140-21
65S-2303030	51	140-21
65S-2304005B	12	140-20
65S-3003016C1	4	140-20
65S-3003017C1	5	140-20
7307	11	140-12
AD14-21	24	100-4
AD16-03	3	110-46
AD16-04	2	110-46
AD24-33	6	130-2
AD24-34	3	130-2
AD24-36	1	130-4
AD24-37	1	130-8
AD24-44	4	130-2
AD24-58	5	130-8
AD26-33	9	110-38
AD28-11	6	110-46
AD28-11	32	120-6
AD30-29	7	110-48
AD30-29	19	120-10
AD34-28	10	110-46
AD34-28	18	120-22
AD36-73	3	90-8
AD36-74	4	90-8
AD37-25	9	110-46
AD37-25	31	120-4
AD38-01	6	70-6
AD38-02	7	70-6
AD38-13	10	70-2
AD38-14	5	70-2
AD38-15	11	70-2
AD38-16	6	70-2
AD38-47	14	70-2
AD38-47	17	70-2
AD38-56		70-6
AD38-57		70-6
AD38805	5	70-4
AD38813	20	70-8
AD38815	8	70-8
AD38-85	7	70-4
AD40-05	25	50-6
AS20419	5	90-2

索　　引 (INDEX)

件　　号	序号	页　　号	件　　号	序号	页　　号
AS26198	2	40-6	AS45093		80-10
AS26199	3	90-12	AS45095		80-10
AS26200	11	40-6	AS45096		80-10
AS26462	14	40-4	AS45703	5	140-26
AS26473	7	40-4	AS45705	6	140-26
AS26474	9	40-4	AS45707		140-26
AS27855	14	60-8	AS45709		140-26
AS29688	4	40-6	AS45797	3	40-2
AS30153	1	120-22	AS46256	25	90-2
AS30163	5	130-10	AS46892	3	40-6
AS30414		30-12	AS46893	1	40-6
AS32232	1	40-4	AS47982	1	90-6
AS38-60		70-20	AYC10009	18	90-2
AS38801	4	70-4	AYC10050	16	30-16
AS38803	22	70-4	AYC10181	5	100-4
AS38807	21	70-4	AYC10185	1	100-6
AS38809	5	70-12	AYC10187	3	100-6
AS38811	12	70-12	AYC10188	23	100-4
AS38819	33	70-2	AYC10189	25	100-4
AS38821	34	70-2	AYC10190	6	100-2
AS38823	4	70-2	AYC10194	7	100-4
AS38825	35	70-2	AYC10195	36	100-4
AS39101	2	30-2	AYC10196	12	100-4
AS39102	3	30-2	AYC10197	26	100-2
AS39103		30-2	AYC10208	21	100-4
AS39104		30-2	AYC10228	1	110-2
AS39226	19	80-10	AYC10229	2	110-2
AS39475	1	30-2	AYC10231	4	110-2
AS39756	1	70-18	AYC10232	1	110-8
AS39812	1	90-12	AYC10233	2	110-8
AS40921	12	30-4	AYC10234	3	110-8
AS40922	13	30-4	AYC10235	20	110-8
AS41647	9	70-6	AYC10236	18	110-6
AS41649	35	140-26	AYC10239	13	110-6
AS41651	36	140-26	AYC10241	18	110-8
AS41653	4	140-26	AYC10242	27	110-6
AS41655	37	140-26	AYC10244		110-6
AS41657	14	140-26	AYC10247	27	110-10
AS41781	11	140-26	AYC10249	1	110-10
AS41783	10	140-26	AYC10251	2	110-10
AS41791	17	140-26	AYC10252	3	110-10
AS41793	18	140-26	AYC10253	4	110-10
AS41945	2	30-10	AYC10254	5	110-10
AS42762	21	90-2	AYC10255	6	110-10
AS42774	1	40-2	AYC10256	7	110-10

索　引 (INDEX)

件　号	序号	页　号	件　号	序号	页　号
AYC10258	11	110-18	AYC10379	20	120-10
AYC10260	1	110-18	AYC10380	1	120-10
AYC10262	1	110-20	AYC10381	21	120-10
AYC10263	3	110-20	AYC10383	1	80-4
AYC10264	17	110-16	AYC10387	1	120-2
AYC10265	2	110-12	AYC10388	8	80-2
AYC10265	15	110-16	AYC10389	1	80-2
AYC10266	16	110-16	AYC10391		140-8
AYC10267	1	110-16	AYC10392	1	60-5
AYC10268	1	110-12	AYC10393	9	60-4
AYC10269	2	110-16	AYC10394	1	60-4
AYC10270	4	110-14	AYC10396		120-20
AYC10272	2	110-14	AYC10397	14	120-16
AYC10273	3	110-14	AYC10398	19	120-14
AYC10328	17	110-20	AYC10404	10	120-20
AYC10329	18	110-20	AYC10405	17	120-20
AYC10330	1	110-32	AYC10406	1	120-14
AYC10332	4	110-32	AYC10407	3	120-14
AYC10333	1	110-34	AYC10408	2	120-14
AYC10335	1	110-36	AYC10409	3	120-20
AYC10337	8	110-34	AYC10410	1	120-20
AYC10338	9	110-34	AYC10411	6	120-16
AYC10339	7	110-42	AYC10412	14	120-14
AYC10341	6	110-42	AYC10414	16	120-26
AYC10342	5	110-42	AYC10415	6	120-26
AYC10343	3	110-38	AYC10416	1	120-26
AYC10344	9	110-36	AYC10417		120-20
AYC10345	2	110-38	AYC10418	2	120-20
AYC10346	16	110-36	AYC10419	9	90-14
AYC10354	17	110-44	AYC10422	1	90-14
AYC10355		110-44	AYC10423	13	90-18
AYC10356	1	110-42	AYC10424	11	90-18
AYC10358	1	110-28	AYC10425	6	90-18
AYC10359	10	110-30	AYC10426	21	90-14
AYC10360	2	110-30	AYC10429		80-2
AYC10363	36	120-4	AYC10430	5	90-8
AYC10364	30	120-4	AYC10431	19	120-18
AYC10365	19	120-4	AYC10432	18	120-18
AYC10366	19	120-6	AYC10433	20	110-24
AYC10369	29	120-4	AYC10433	1	120-18
AYC10371	18	120-8	AYC10434	20	120-16
AYC10373	34	120-8	AYC10436	33	120-4
AYC10374	29	120-8	AYC10438	10	50-2
AYC10375	27	120-8	AYC10439	8	50-4
AYC10376	28	120-8	AYC10440	22	50-4

索　引 (INDEX)

件　号	序号	页　号	件　号	序号	页　号
AYC10441	11	50-4	AYC10509	9	90-2
AYC10443	18	50-4	AYC10510	24	120-4
AYC10444	11	110-10	AYC10514	4	120-20
AYC10445	9	110-4	AYC10515	6	120-20
AYC10446		110-10	AYC10516	14	50-16
AYC10447		110-4	AYC10517	51	50-7
AYC10448	32	110-44	AYC10518	9	50-16
AYC10449	29	110-16	AYC10519	3	50-20
AYC10450	39	110-24	AYC10520	1	50-20
AYC10451	40	110-24	AYC10522	7	50-9
AYC10452	24	110-24	AYC10524	76	50-14
AYC10453	6	110-24	AYC10529	2	50-18
AYC10454	31	110-24	AYC10530	49	50-7
AYC10454	11	110-26	AYC10537	2	120-16
AYC10455	8	110-26	AYC10572	1	70-14
AYC10458		110-4	AYC10575	14	70-10
AYC10458		110-10	AYC10609	2	70-18
AYC10462	14	110-26	AYC10610	31	70-20
AYC10463	5	70-6	AYC10611		70-4
AYC10464	19	70-8	AYC10631	8	40-4
AYC10465		70-2	AYC10641	23	70-20
AYC10466	13	70-8	AYC10671	7	140-26
AYC10466	5	90-4	AYC10677	15	40-4
AYC10467	4	70-6	AYC10677	5	40-6
AYC10468	1	70-16	AYC10678	12	40-6
AYC10469	8	70-16	AYC10681	21	90-16
AYC10471	23	70-2	AYC10682		40-4
AYC10471	10	70-4	AYC10697	4	40-2
AYC10471	25	140-26	AYC10698		40-2
AYC10472	35	50-12	AYC10709	22	90-2
AYC10475	18	50-12	AYC10710	24	90-2
AYC10479	1	50-9	AYC10712	23	90-2
AYC10483	13	50-6	AYC10744	13	60-8
AYC10485		50-20	AYC10755	21	70-2
AYC10486		50-20	AYC10755	13	70-4
AYC10492	1	30-10	AYC10755	9	70-20
AYC10494	6	30-4	AYC10755	23	140-26
AYC10495		30-2	AYC10784	6	40-6
AYC10496	23	30-16	AYC10788	13	40-4
AYC10497	5	30-4	AYC10858	2	40-4
AYC10498	7	30-2	AYC10862	17	40-4
AYC10499	11	30-2	AYC10870	2	30-6
AYC10503	8	40-2	AYC10871	1	30-6
AYC10507	19	90-2	AYC10872	4	30-6
AYC10508	20	90-2	AYC10873	5	30-6

索　引 (INDEX)

件　号	序号	页　号	件　号	序号	页　号
AYC10898	1	30-14	AYC11404	11	90-16
AYC10900	3	30-14	AYC11406	1	110-14
AYC10901	21	30-6	AYC11408	2	90-14
AYC10933	1	70-2	AYC11409	23	90-20
AYC10933	1	140-26	AYC11410	10	30-16
AYC11096	44	110-24	AYC11411	6	90-8
AYC11096	4	110-50	AYC11412	13	90-8
AYC11096	12	120-18	AYC11413	1	90-4
AYC11181		70-18	AYC11414	3	80-10
AYC11357	3	90-10	AYC11415	4	80-10
AYC11358	11	90-8	AYC11417	1	60-2
AYC11359		90-2	AYC11449	28	120-6
AYC11360	1	120-12	AYC11464		60-8
AYC11365	6	120-14	AYC11479	8	80-10
AYC11366	2	120-4	AYC11488		30-2
AYC11367	1	120-4	AYC11489		30-12
AYC11368	20	120-6	AYC11490		90-2
AYC11371	4	120-4	AYC11491	15	90-2
AYC11372	3	120-4	AYC11497		30-10
AYC11373	30	120-6	AYC11506		80-10
AYC11374	29	120-6	AYC11530	18	80-6
AYC11375	4	120-12	AYC11537	1	80-6
AYC11376	27	120-6	AYC11539	12	80-4
AYC11377	26	120-6	AYC11612	22	110-6
AYC11378	8	120-12	AYC11779	5	40-2
AYC11380	1	80-10	AYC11857	3	80-12
AYC11381	6	80-12	AYC11859	7	80-12
AYC11382	10	80-12	AYC11874	1	80-14
AYC11383	11	80-12	AYC11875	3	80-14
AYC11384	12	80-8	AYC11881	1	60-1
AYC11385	12	80-12	AYC11882	3	60-2
AYC11386	2	80-14	AYC11883	1	60-6
AYC11387	12	80-10	AYC11888	13	90-16
AYC11388	14	80-10	AYC11896	17	90-20
AYC11389	4	80-14	AYC11897	16	90-20
AYC11392	9	80-12	AYC11910	7	120-18
AYC11393	5	80-12	AYC11989	4	140-8
AYC11394		80-10	AYC11990		140-16
AYC11395		80-10	AYC11992	1	140-4
AYC11396	1	120-8	AYC11993	2	140-2
AYC11397	1	90-8	AYC11994		140-4
AYC11399	7	90-12	AYC11995	2	140-4
AYC11400	7	90-4	AYC11996	6	140-4
AYC11402	4	90-16	AYC12009	11	80-10
AYC11403	6	90-16	AYC12014	16	80-10

索　　引 (INDEX)

件　　号	序号	页　　号	件　　号	序号	页　　号
AYC12015	18	80-10	AYC12583	13	40-6
AYC12016	2	120-24	AYC12647	5	110-48
AYC12017	1	120-24	AYC12731	7	70-2
AYC12031	87	140-22	AYC12731	16	70-2
AYC12032	4	140-6	AYC12794	2	70-14
AYC12033	1	140-6	AYC12814	7	70-8
AYC12050	19	110-6	AYC12814	6	70-12
AYC12053	2	40-2	AYC12814	16	140-26
AYC12060	3	140-5	AYC12821	8	70-4
AYC12061		140-5	AYC12918	3	70-18
AYC12062		90-2	AYC13257	21	110-8
AYC12063	16	90-2	AYC13325		70-8
AYC12064	3	90-2	AZ19242	10	110-36
AYC12067	26	90-2	AZ19889	22	90-20
AYC12101	1	140-10	AZ21454	3	30-6
AYC12102	1	140-9	AZ21973	3	70-6
AYC12104	12	140-14	AZ21974	9	70-8
AYC12105	10	140-15	AZ21974	4	70-12
AYC12106	2	140-9	AZ22524	1	70-4
AYC12108	1	100-2	AZ22878	4	70-18
AYC12121	17	140-9	AZ23183	4	110-40
AYC12122		140-10	AZ23184	6	110-40
AYC12126	14	90-2	AZ23878		70-18
AYC12130	4	90-2	AZ25674	8	70-2
AYC12132	15	140-4	AZ25674	8	140-26
AYC12143	27	90-2	AZ31666	2	70-8
AYC12181		90-2	D21525	14	110-8
AYC12183		90-2	D21601	8	110-2
AYC12184	1	90-2	D22408	14	110-6
AYC12188	1	140-8	D22410	31	110-6
AYC12189		140-14	D24101	5	110-4
AYC12194	2	80-12	D24101	19	110-8
AYC12232	8	40-6	D24101	8	110-12
AYC12235	5	60-4	D24101	21	110-22
AYC12236	6	60-4	D24534	6	130-10
AYC12267		110-50	D24535	13	130-10
AYC12290	1	90-20	D24538	2	130-2
AYC12329	1	70-10	D24539	8	130-2
AYC12394	11	80-8	D24544	3	130-8
AYC12394	20	80-10	D24545	11	130-2
AYC12417	1	130-6	D24546	9	130-2
AYC12417	8	130-6	D24547	10	130-2
AYC12429	18	70-20	D24548	5	130-2
AYC12508	8	110-38	D24551	7	130-2
AYC12511	28	110-36	D24552	2	80-8

索　引 (INDEX)

件　号	序号	页　号
D24552	1	130-2
D31428	4	80-6
D33005		60-8
D33005		60-8
D33006		60-8
D34404	20	120-22
D37109	5	110-22
D37124	8	50-2
D37130	17	110-4
D37131	18	110-4
D37132	19	110-4
D37140	8	110-4
D37140	4	110-8
D37140	28	110-10
D37140	3	130-10
D37210	8	130-10
D37211	1	130-10
D37212	2	130-10
D37406	2	50-4
D37406	15	110-24
D37411	30	110-16
D37411	3	110-22
D37413	39	110-16
D37418	17	120-18
D37617		110-24
D37640	13	110-26
D37640	21	110-26
D37824	26	120-16
D39459	3	120-24
D40002		50-20
D40003		50-20
D40004		50-20
D40102	5	50-12
D40104	19	50-6
D40411	26	50-12
D40440	45	50-13
D40442	15	50-12
D40443	46	50-13
D40444	20	50-12
D40444	2	140-16
D41552		30-12
D42440		40-4
D46841	20	120-26
E12817	26	90-14
F10003	17	100-4
F10006	10	50-20
F10008	3	50-2
F10009	4	50-20
F10064	84	50-14
F10097		50-20
F10098		50-20
F10099		50-20
F38361	4	70-8
F40012	51	50-13
F40107	52	50-13
F40206A	38	50-7
F40215A	37	50-7
F40404	16	50-6
F40405	79	50-14
F40412A	43	50-7
F40444	71	50-13
F40619	31	50-12
F40629	80	50-14
F40804	34	50-6
H10613	11	110-42
HQ—01-03	16	140-24
HQ02-01	11	140-24
HQ-02-04-01	6	140-12
HQ-02-04-02	13	140-12
HQ-02-07	10	140-24
HQ-02-07-1	9	140-24
HQ-02-09	21	140-24
HQ-02-10	14	140-24
HQ-02-11	15	140-24
HQ-02-12	9	140-12
HQ-02-17	2	140-24
HQ-02-19	3	140-24
HQ-02-24	19	140-24
HQ-02-36-2	20	140-24
HQ-03-01	24	140-24
HQ-03-02	25	140-24
HQ-03-03	23	140-24
HQ-03-04	27	140-24
HQ-03-05	26	140-24
HQ-03-06	22	140-24
J16931	6	70-16
J16931	4	130-8
JD37049	5	140-12
L19162	5	90-16
L19162	40	110-16

索　引 (INDEX)

件　号	序号	页　号	件　号	序号	页　号
L19162	24	110-30	S46886	5	140-15
L19386	20	70-20	T35	18	100-4
L20507	12	110-28	YC10160	6	140-2
P42100	18	110-36	YC10189	1	80-18
P42100	4	110-42	YC10190	2	80-18
P47232	9	110-16	YC10193	4	80-18
P47232	7	110-30	YC10205	5	80-18
P47232	8	120-6	YC10218	3	80-18
P47232	9	120-8	YC10238	4	120-26
P47232	13	120-10	YC10331	36	110-24
P47232	15	120-20	YC10495	6	80-18
P49545	3	110-40	YC10497	7	80-18
P49545	3	110-42	YC10498	8	80-18
PART NO.	KEY		YC10693	21	100-2
PK1103H	17	110-36	YC10694	17	80-2
PK1103H	12	110-42	YC10694	14	80-4
PK1931H	5	110-40	YC10695	10	80-18
S10213	17	30-12	YC10699	6	100-4
S10644	18	30-8	YC10713	2	100-6
S20078	11	120-18	YC10720	14	100-4
S20078	12	130-10	YC10724	18	80-16
S20951	5	70-18	YC10724	9	80-18
S24335	36	50-6	YC10734	26	100-4
S24338	6	50-6	YC10747	11	100-4
S29461		30-16	YC10751	13	80-2
S29462	5	30-16	YC10751	8	80-4
S29463		30-10	YC10776	8	100-4
S30090	14	70-4	YC10847	5	110-2
S36610	17	90-18	YC10848	6	110-2
S36612	2	90-18	YC10853		110-2
S37629	38	70-20	YC10853	6	110-8
S39508		30-4	YC10854	5	110-8
S39512	10	30-10	YC10855	8	110-6
S39513	9	30-10	YC10866	4	110-6
S39797	5	30-10	YC10872	15	110-6
S39811	19	90-20	YC10876	17	110-6
S40073		60-8	YC10878	32	110-6
S41951	6	30-10	YC10879	21	110-6
S41952	8	30-10	YC10880	7	110-6
S45731		140-6	YC10887	26	110-10
S45732		140-6	YC10890	18	110-10
S45733		140-6	YC10895	20	110-10
S46883	2	140-15	YC10898	2	110-18
S46884	1	140-15	YC10916	13	110-18
S46885	6	140-15	YC10918	3	110-18

索　　引 (INDEX)

件　　号	序号	页　　号	件　　号	序号	页　　号
YC10923	20	110-16	YC11121	44	120-8
YC10924	8	110-20	YC11129	25	120-4
YC10926	16	110-20	YC11133	18	120-4
YC10927	10	110-20	YC11136	14	30-16
YC10930	2	110-20	YC11139	42	120-4
YC10932	4	110-12	YC11152	1	120-6
YC10934	9	110-20	YC11156	41	120-4
YC10939	20	110-12	YC11157	35	120-8
YC10941	3	110-12	YC11158	40	120-8
YC10942	21	110-12	YC11159	13	120-6
YC10944	22	110-12	YC11159	16	120-10
YC10974	10	110-14	YC11159	24	120-20
YC11005	4	110-20	YC11160	3	120-8
YC11009	2	110-32	YC11161	40	120-4
YC11010	11	110-32	YC11161	32	120-8
YC11011	23	110-36	YC11162	16	120-6
YC11012	2	110-34	YC11169	2	120-10
YC11013	2	110-36	YC11173	36	120-8
YC11016	8	110-44	YC11180	6	120-6
YC11017	4	110-44	YC11180	6	120-8
YC11018	31	110-44	YC11181	9	120-4
YC11019	5	110-44	YC11181	30	120-8
YC11020	10	110-42	YC11188	12	120-8
YC11020	22	110-44	YC11189	43	120-8
YC11027	3	110-32	YC11203	2	120-8
YC11029	13	110-32	YC11206	2	120-2
YC11030	12	110-32	YC11207	7	120-2
YC11042	25	110-36	YC11208	2	80-6
YC11049	26	110-36	YC11219	6	80-4
YC11062	19	110-42	YC11220	3	120-2
YC11063	9	110-44	YC11221	9	80-2
YC11064	3	110-34	YC11239	5	80-6
YC11070	19	110-40	YC11240	7	80-2
YC11072	7	110-36	YC11242	8	120-2
YC11081	3	110-36	YC11255	2	60-4
YC11082	2	110-42	YC11269	3	60-4
YC11094	7	110-34	YC11272	4	60-1
YC11097	1	110-44	YC11278	4	60-4
YC11108	9	110-28	YC11282	29	120-20
YC11112	6	110-30	YC11284	32	120-20
YC11114	3	110-30	YC11285	20	120-14
YC11115	3	110-28	YC11286	19	120-22
YC11116	5	110-30	YC11287	5	120-26
YC11118	1	110-30	YC11292	16	120-14
YC11120	29	110-30	YC11296	18	120-14

索　　引 (INDEX)

件　　号	序号	页　　号	件　　号	序号	页　　号
YC11302	21	120-22	YC11447	23	110-16
YC11303	25	120-20	YC11448	5	50-4
YC11312	30	120-20	YC11449	22	110-10
YC11319	17	120-14	YC11458	13	50-4
YC11322		120-22	YC11458	21	110-24
YC11324	13	120-14	YC11458	5	120-18
YC11325	7	120-14	YC11460	4	110-22
YC11326	8	120-14	YC11461	35	110-16
YC11340	15	120-16	YC11461	20	110-44
YC11351	1	120-16	YC11461	27	110-44
YC11355	14	120-26	YC11461	21	120-16
YC11357	11	120-26	YC11470	7	110-50
YC11358	15	120-26	YC11472	17	50-2
YC11361	10	120-22	YC11482	28	110-44
YC11362		120-22	YC11483		110-44
YC11369	13	90-14	YC11516	5	110-50
YC11370	16	90-14	YC11532	11	110-50
YC11371	10	90-18	YC11533	7	110-50
YC11372	13	90-20	YC11535	18	110-22
YC11373	7	90-16	YC11536	19	50-4
YC11376	17	90-14	YC11536	19	110-24
YC11405	15	90-14	YC11536	2	120-18
YC11407	1	90-18	YC11537	10	120-18
YC11409	9	90-18	YC11539	4	50-4
YC11410	9	30-16	YC11539	11	110-24
YC11420	10	90-14	YC11539	4	110-26
YC11422	1	110-48	YC11542	10	110-4
YC11423	41	110-24	YC11543	21	50-4
YC11425	14	110-24	YC11544	9	110-24
YC11425	5	110-26	YC11546	5	110-24
YC11426	29	110-44	YC11547	6	80-6
YC11427	28	120-4	YC11557	11	110-22
YC11428	38	120-8	YC11558	24	110-10
YC11429	34	110-16	YC11559	26	110-16
YC11430	17	110-24	YC11560	5	110-50
YC11431	32	120-4	YC11568	25	110-10
YC11432	25	110-30	YC11571	3	120-18
YC11433	27	50-4	YC11572	22	120-18
YC11433	27	110-26	YC11573	23	120-18
YC11434	9	110-10	YC11574	25	50-4
YC11435	7	110-22	YC11576	3	70-12
YC11437	10	110-10	YC11581	4	70-20
YC11438	8	110-22	YC11583	7	70-20
YC11445	19	110-10	YC11585	15	80-4
YC11446	27	110-16	YC11592	10	70-8

索　　引 (INDEX)

件　　号	序号	页　　号	件　　号	序号	页　　号
YC11593	2	70-4	YC11697	5	80-16
YC11594	2	70-12	YC11698	6	80-16
YC11595	2	70-6	YC11699	7	80-16
YC11596	9	70-4	YC11700	8	80-16
YC11597	15	70-2	YC11701	9	80-16
YC11597	32	70-20	YC11702	10	80-16
YC11597	15	140-26	YC11703	11	80-16
YC11598	3	70-20	YC11704	12	80-16
YC11601	4	70-16	YC11705	13	80-16
YC11614	4	50-18	YC11725	13	80-8
YC11616	4	50-16	YC11726	14	80-8
YC11617	5	50-6	YC11727	15	80-10
YC11618	2	50-6	YC11728	1	80-8
YC11631	6	50-18	YC11734	41	120-8
YC11632	6	50-16	YC11735	42	120-8
YC11633	24	50-9	YC11740	20	100-4
YC11635	23	50-6	YC11741	16	100-4
YC11637	75	50-14	YC11742	13	100-4
YC11638	40	50-10	YC11743	25	100-2
YC11640	29	50-12	YC11743	22	100-4
YC11641	10	50-12	YC11744	5	100-2
YC11642	40	50-13	YC11751	7	120-4
YC11643	39	50-13	YC11752	8	120-4
YC11644	6	50-12	YC11753	6	120-4
YC11645	30	50-12	YC11755	7	120-8
YC11646	70	50-13	YC11759	20	80-6
YC11650	5	30-14	YC11760	11	80-4
YC11651	4	30-4	YC11763	19	80-6
YC11652		30-10	YC11763	4	80-12
YC11653		30-10	YC11763	5	120-20
YC11656	7	30-10	YC11766	7	120-20
YC11660		30-12	YC11770	10	90-16
YC11661		30-12	YC11770	4	90-18
YC11662		30-12	YC11770	3	140-4
YC11663		30-12	YC11771	1	110-24
YC11664		30-12	YC11773	2	90-16
YC11668	12	30-2	YC11774	15	50-6
YC11668		30-2	YC11774	9	90-16
YC11672	8	30-2	YC11774	3	90-18
YC11673	19	30-2	YC11774	4	140-4
YC11681	6	40-4	YC11776	3	110-24
YC11692	1	80-16	YC11776	21	120-18
YC11694	2	80-16	YC11778	4	110-50
YC11695	3	80-16	YC11779	2	50-2
YC11696	4	80-16	YC11780	18	50-2

索　　引 (INDEX)

件　　号	序号	页　　号	件　　号	序号	页　　号
YC11783	19	50-2	YC11834	12	50-9
YC11783	15	90-18	YC11835	2	50-9
YC11784	9	50-2	YC11836	36	50-12
YC11786	26	50-2	YC11837	14	50-6
YC11787	22	50-2	YC11838	53	50-13
YC11788	1	110-50	YC11839	46	50-7
YC11789	33	50-2	YC11839	24	50-12
YC11790	27	50-2	YC11840	20	50-6
YC11791	29	50-2	YC11841	50	50-13
YC11792	5	50-2	YC11842	22	50-12
YC11793	29	50-9	YC11845	50	50-7
YC11794	28	50-9	YC11846	30	50-6
YC11795	37	50-13	YC11847	31	50-6
YC11796	48	50-13	YC11848	7	50-16
YC11797	17	50-6	YC11849	3	50-16
YC11798	34	50-12	YC11851	8	50-20
YC11799	2	50-12	YC11856	17	50-9
YC11800	14	50-12	YC11857	19	50-9
YC11801	81	50-14	YC11858	7	50-20
YC11802	54	50-13	YC11859	6	50-9
YC11803	21	50-6	YC11860	6	50-20
YC11804	13	50-12	YC11864	27	50-9
YC11805	26	50-6	YC11865	2	50-20
YC11806	5	50-16	YC11866	63	50-13
YC11807	13	50-16	YC11867	22	50-9
YC11810	5	50-18	YC11871	83	50-14
YC11812	19	50-12	YC11872	74	50-14
YC11813	82	50-14	YC11873	26	50-9
YC11814	49	50-13	YC11877	31	50-9
YC11815	1	50-12	YC11878	15	50-20
YC11816	17	50-12	YC11879	13	50-20
YC11818	9	50-20	YC11880	47	50-7
YC11819	3	90-16	YC11885	9	50-12
YC11819	12	90-18	YC11886	8	50-12
YC11820	34	50-9	YC11888	41	50-13
YC11820	33	50-12	YC11889	73	50-14
YC11820	28	140-24	YC11890	11	50-12
YC11821	35	50-9	YC11891	56	50-13
YC11822	48	50-7	YC11892	55	50-13
YC11823	3	50-9	YC11893	65	50-13
YC11824	22	50-6	YC11894	61	50-13
YC11827	3	50-18	YC11895	25	50-12
YC11828	15	50-9	YC11896	58	50-13
YC11829	12	50-20	YC11897	45	50-7
YC11833	35	50-6	YC11897	23	50-12

索　引 (INDEX)

件　号	序号	页　号
YC11898	66	50-13
YC11899	67	50-13
YC11900	59	50-13
YC11901	8	90-18
YC11902	7	90-18
YC11903	57	50-13
YC11904	3	50-6
YC11907	13	50-9
YC11912	27	50-6
YC11913	2	50-16
YC11914	12	50-16
YC11915	11	50-16
YC11916	8	50-16
YC11917	10	50-18
YC11918	9	50-18
YC11919	8	50-18
YC11920	16	50-9
YC11921	23	50-9
YC11922	21	50-9
YC11923	18	50-9
YC11923	16	50-20
YC11924	20	50-9
YC11926	14	50-20
YC11927	8	50-9
YC11928	5	50-9
YC11929	5	50-20
YC11931	4	50-9
YC11932	30	50-9
YC11933	60	50-13
YC11936	7	50-12
YC11937	28	50-12
YC11938	43	50-13
YC11939	62	50-13
YC11940	64	50-13
YC11941	68	50-13
YC11942	25	50-9
YC11944	72	50-13
YC11967	24	70-20
YC11968	2	30-8
YC11969	11	130-10
YC11970		30-8
YC11978	1	30-12
YC12049		30-12
YC12076	4	140-16
YC12136		110-22
YC12153	1	60-8
YC12257	6	70-18
YC12264	18	70-2
YC12264	9	70-18
YC12264	19	140-26
YC12332	14	110-4
YC12332	8	110-48
YC12348	13	70-20
YC12351	5	40-4
YC12352	2	100-2
YC12352	10	120-4
YC12352	31	120-8
YC12352	4	120-14
YC12381	22	70-2
YC12382	12	70-4
YC12382	24	140-26
YC12397	12	90-2
YC12401	39	70-20
YC12447	22	90-16
YC12448	23	90-16
YC12478	26	50-4
YC12478	38	110-24
YC12478	26	110-26
YC12574	1	30-8
YC12595	4	60-8
YC12701	6	30-12
YC12702	15	30-12
YC12703	2	30-12
YC12704	12	30-12
YC12807	3	70-4
YC12807	1	70-6
YC12807	12	70-8
YC12807	1	70-12
YC12869	16	40-4
YC12871	3	40-4
YC12879	21	30-8
YC12882	5	30-8
YC12953	6	70-4
YC12953	23	70-4
YC12953	24	70-4
YC12970	11	30-8
YC12971		30-10
YC12972		30-10
YC12978	14	80-16
YC13005	20	70-2

索　　引 (INDEX)

件　　号	序号	页　　号	件　　号	序号	页　　号
YC13005	11	70-4	YC14272	24	110-6
YC13005	33	70-20	YC14276	22	90-14
YC13005	22	140-26	YC14279	12	90-8
YC13009	4	70-10	YC14284	6	90-12
YC13010	19	70-2	YC14305		30-16
YC13010	17	70-4	YC14357	15	80-16
YC13010	7	70-18	YC14395	15	30-16
YC13010	20	140-26	YC14396	4	30-10
YC13011	5	70-10	YC14413		30-8
YC13012	6	70-10	YC14414	9	30-12
YC13068	13	110-8	YC14449	11	30-16
YC13986	4	30-14	YC14451	5	80-10
YC13988	26	70-2	YC14457	7	30-14
YC13988	28	140-26	YC14531	16	80-2
YC14109	8	90-2	YC14589	12	110-18
YC14114	1	90-10	YC14591	15	110-18
YC14115	2	90-10	YC14740	17	110-22
YC14121	17	90-2	YC14741	19	110-22
YC14133	2	120-12	YC14834	1	110-6
YC14134	6	120-12	YC14880	27	30-16
YC14135	3	120-12	YC14890	38	140-26
YC14135	5	120-12	YC14891	21	140-26
YC14140	7	120-12	YC14980	6	30-14
YC14159	31	120-6	YC15439	9	60-8
YC14163	22	120-6	YC15549	6	90-4
YC14180	10	80-10	YC15575	3	80-6
YC14186	2	80-10	YC15579	16	80-4
YC14191	1	80-12	YC15812	9	140-8
YC14195	4	80-8	YC15816	5	140-2
YC14199	5	80-8	YC15817	4	140-2
YC14200	3	80-8	YC15818	1	140-2
YC14206	17	80-10	YC15821	3	140-2
YC14208	4	120-24	YC15877	9	80-8
YC14210	6	80-8	YC15954	16	80-16
YC14219	8	80-12	YC16000	13	90-2
YC14228	15	70-18	YC16001	7	90-2
YC14229	14	70-18	YC16003	6	90-2
YC14234	6	80-10	YC16003	11	90-2
YC14235	7	80-10	YC16004	10	90-2
YC14249	8	90-12	YC16010		90-2
YC14257	3	90-4	YC16014	2	90-2
YC14258	4	90-4	YC16040	17	80-16
YC14267	1	90-16	YC16045	4	140-5
YC14268	12	90-16	YC16046	2	140-5
YC14269	14	90-16	YC16052	3	140-9

索　　引 (INDEX)

件　　号	序号	页　　号	件　　号	序号	页　　号
YC16055	11	140-9	YC16557	13	70-10
YC16056	5	140-9	YC16601	4	110-50
YC16057	10	140-16	YC16601	23	120-6
YC16058	6	140-16	YC16601	3	120-10
YC16059	4	140-9	YC16601	7	130-10
YC16079	1	140-16	YC16602	3	110-50
YC16088	8	90-6	YC16602	24	120-6
YC16089	7	90-6	YC16602	4	120-10
YC16090	5	140-16	YC16602	25	130-10
YC16136	25	30-16	YC16618	24	90-14
YC16136		30-16	YC16620	28	90-14
YC16137	21	30-16	YC16643	5	60-8
YC16137		30-16	YC16822	9	30-8
YC16138	26	30-16	YC16844	9	70-2
YC16138		30-16	YC16844	10	70-6
YC16139		30-16	YC16844	21	70-8
YC16139		30-16	YC16844	9	140-26
YC16143	15	60-8	YC16850	8	70-6
YC16178	2	140-6	YC16856	20	30-6
YC16179	3	140-6	YC16875	15	120-22
YC16180	3	110-2	YC16898	7	70-16
YC16214	6	40-2	YC16914	18	70-4
YC16215	7	40-2	YC16914	8	70-18
YC16235	3	110-48	YC16917	10	80-8
YC16236	2	110-48	YC16917		80-10
YC16237	4	110-48	YC16954	12	40-4
YC16239	1	140-5	YC16998	3	130-6
YC16254	17	140-24	YC17062	7	60-4
YC16255	19	140-12	YC17265	3	110-16
YC16256	17	140-12	YC17265	12	110-44
YC16257	12	140-12	YC17286	14	90-8
YC16258	14	140-12	YC17290	6	110-22
YC16259	1	140-12	YC17290	7	110-46
YC16260	7	140-12	YC17336	11	30-4
YC16261	1	140-24	YC17336		30-4
YC16262	23	140-12	YC17373	8	110-46
YC16294	3	70-2	YC17462	12	80-18
YC16294	3	140-26	YC17498	14	130-10
YC16295	2	70-2	YC17499	5	70-20
YC16295	2	140-26	YC17499	11	110-46
YC16306	12	60-8	YC18763	6	70-8
YC16311	1	110-46	YC18764	5	70-8
YC16321	3	30-12	YC18766	3	70-8
YC16344	11	60-4	YC18767	1	70-8
YC16382	2	140-8	YC18768	10	50-16

索　引 (INDEX)

件　号	序号	页　号	件　号	序号	页　号
YC19018	12	30-8	Z34825	16	70-20
YC19019	6	110-48	Z34938	4	70-14
YC19020	5	110-46	Z34952	32	70-2
YC19025	4	110-46	Z34952	18	70-8
Z10008	7	110-40	Z34952	11	70-12
Z10418	9	110-42	Z34952	34	140-26
Z10639	8	110-42	Z34955	28	70-2
Z10793	3	140-8	Z34955	30	140-26
Z10818	14	30-8	Z35217	5	130-4
Z10914	1	110-40	Z35241	2	130-8
Z11213	12	90-20	Z35842	7	130-6
Z11632	8	130-4	Z35843	5	130-6
Z11632	16	130-10	Z35844	4	130-6
Z20127	12	110-34	Z35845		130-6
Z20154	10	110-28	Z35893	25	120-16
Z20367	4	100-2	Z35894	5	120-16
Z20367	5	120-14	Z36022	12	90-14
Z20713	3	100-2	Z36530	10	110-34
Z21232	7	30-8	Z36731	4	60-2
Z21592	3	60-1	Z36731	10	140-8
Z21613	5	90-14	Z37382	29	100-4
Z21823	29	90-14	Z37688	11	70-8
Z21834	8	90-14	Z37972	17	110-42
Z21993	24	90-20	Z38395	15	120-4
Z22711	14	70-20	Z38395	33	120-8
Z23954	36	70-20	Z38395	17	120-16
Z24651	7	60-1	Z38579	34	120-20
Z25462	2	120-26	Z38597	9	30-6
Z26239	6	140-8	Z38738	19	70-20
Z27188	18	90-14	Z38783	15	70-20
Z27188	8	140-2	Z39330	12	60-4
Z27520	11	110-28	Z39331	13	60-4
Z30026	7	120-22	Z39668	6	30-6
Z30194	3	90-20	Z39723	18	110-34
Z30294	37	70-20	Z39723	29	110-36
Z30715	14	90-20	Z40822	24	30-16
Z31090	2	70-10	Z40822	14	140-4
Z32264	9	80-10	Z40936	37	110-24
Z32401	14	80-2	Z40936	19	110-26
Z32401	10	80-4	Z41136	11	80-18
Z32962	13	70-12	Z41210	13	80-18
Z33258	26	110-42	Z41211	14	80-18
Z33527	16	120-22	Z41252	5	90-20
Z34309	27	110-36	Z41255	11	70-20
Z34398	19	120-26	Z42175	4	130-4

索　　引 (INDEX)

件　　号	序号	页　　号	件　　号	序号	页　　号
Z42176	3	130-4			