YASKAWA

YASKAWA AC Drive Option

Motor Encoder Feedback (EnDat, HIPERFACE) Interface

Installation Manual

Type: PG-F3

To properly use the product, read this manual thoroughly and retain for easy reference, inspection, and maintenance. Ensure the end user receives this manual.

安川インバータ オプション

エンコーダインタフェース（EnDat, HIPERFACE用）

取扱説明書

形　式 PG-F3

製品を安全にお使いいただくために，本書を必ずお読みください。
また，本書をお手元に保管していただくとともに，最終的に本製品をご使用になるユーザー様のお手元に確実に届けられるよう，お取り計らい願います。

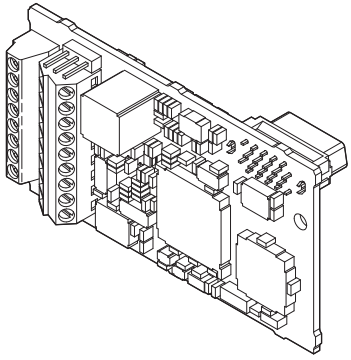

MANUAL NO. TOBP C730600 77C

Copyright © 2016 YASKAWA ELECTRIC CORPORATION

All rights reserved. No part of this publication may be reproduced, stored in a retrieval system, or transmitted, in any form or by any means, mechanical, electronic, photocopying, recording, or otherwise, without the prior written permission of Yaskawa. No patent liability is assumed with respect to the use of the information contained herein. Moreover, because Yaskawa is constantly striving to improve its high-quality products, the information contained in this manual is subject to change without notice. Every precaution has been taken in the preparation of this manual. Yaskawa assumes no responsibility for errors or omissions. Neither is any liability assumed for damages resulting from the use of the information contained in this publication.

Table of Contents

1 PREFACE AND SAFETY 4
2 OVERVIEW 9
3 RECEIVING 10
4 OPTION COMPONENTS 11
5 INSTALLATION PROCEDURE 12
6 RELATED PARAMETERS 43
7 TROUBLESHOOTING 46
8 EUROPEAN STANDARDS 54
9 UNITED KINGDOM CONFORMITY ASSESSED MARKING . . 56
10 KOREAN RADIO WAVES ACT 57
11 SPECIFICATIONS 58
12 DISPOSAL 59

1 Preface and Safety

YASKAWA Electric supplies component parts for use in a wide variety of industrial applications. The selection and application of YASKAWA products remain the responsibility of the equipment designer or end user.
YASKAWA accepts no responsibility for the way its products are incorporated into the final system design. Under no circumstances should any YASKAWA product be incorporated into any product or design as the exclusive or sole safety control. Without exception, all controls should be designed to detect faults dynamically and fail safely under all circumstances. All products designed to incorporate a component part manufactured by YASKAWA must be supplied to the end user with appropriate warnings and instructions as to the safe use and operation of that part. Any warnings provided by YASKAWA must be promptly provided to the end user. YASKAWA offers an express warranty only as to the quality of its products in conforming to standards and specifications published in the manual. NO OTHER WARRANTY, EXPRESS OR IMPLIED, IS OFFERED. YASKAWA assumes no liability for any personal injury, property damage, losses, or claims arising from misapplication of its products.

◆ Applicable Documentation

The following manuals are available for the option:

Option

YASKAWA AC Drive Option Motor Encoder Feedback (EnDat/HIPERFACE) Interface PG-F3 Installation Manual Manual No: TOBP C730600 77 (This book)	This guide is packaged together with the product and contains information necessary to install the option and set related drive parameters.

Yaskawa Drive

YASKAWA AC Drive Manuals	Drive manuals contain basic installation and wiring information in addition to detailed parameter setting, fault diagnostic, and maintenance information. The most recent versions of these manuals are available for download on our documentation websites: U.S.: http://www.yaskawa.com Europe: http://www.yaskawa.eu.com Japan: http://www.e-mechatronics.com Other areas: Check the back cover of these manuals. For questions, contact Yaskawa or a Yaskawa representative

◆ Terms and Abbreviations

Note:	Indicates supplemental information that is not related to safety messages
Option:	YASKAWA AC Drive Option Motor Encoder Feedback (EnDat/HIPERFACE) Interface: Type PG-F3
Drive:	• YASKAWA AC Drive 1000-Series (A1000, L1000A, U1000, U1000L) • YASKAWA AC Drive GA700 • YASKAWA AC Drive GA800 • YASKAWA AC Drive LA700
Keypad:	• LCD Operator for YASKAWA AC Drive 1000-Series • LED Operator for YASKAWA AC Drive 1000-Series • LCD Keypad for YASKAWA AC Drive GA700, GA800, and LA700 • LED Keypad for YASKAWA AC Drive GA700, GA800, and LA700
PG:	Pulse Generator or Encoder mounted on the motor
CLV/PM:	PM Closed Loop Vector Control

◆ Registered Trademarks

- EnDat is a trademark of DR. JOHANNES HEIDENHAIN GmbH.
- HIPERFACE is a trademark of SICK STEGMANN GmbH & Co., KG.

Trademarks are the property of their respective owners.

◆ Supplemental Safety Information

Read and understand this manual before installing, operating, or servicing this option. Install the option according to this manual and local codes.

The following conventions indicate safety messages in this manual. Failure to heed these messages could cause fatal injury or damage products and related equipment and systems.

⚠ DANGER

Indicates a hazardous situation, which, if not avoided, will cause death or serious injury.

⚠ WARNING

Indicates a hazardous situation, which, if not avoided, could cause death or serious injury.

⚠ CAUTION

Indicates a hazardous situation, which, if not avoided, could cause minor or moderate injury.

NOTICE

Indicates an equipment damage message.

■ General Safety

General Precautions
• The diagrams in this book may include options and drives without covers or safety shields to illustrate details. Be sure to reinstall covers or shields before operating any devices. Use the option according to the instructions described in this manual. • The diagrams in this manual are provided as examples only and may not pertain to all products covered by this manual. • The products and specifications described in this manual or the content and presentation of the manual may be changed without notice to improve the product and/or the manual. • Contact Yaskawa or a Yaskawa representative and provide the manual number shown on the front cover to order new copies of the manual.

⚠ DANGER

Heed the safety messages in this manual.

Failure to comply will cause death or serious injury.

The operating company is responsible for any injuries or equipment damage resulting from failure to heed the warnings in this manual.

⚠ WARNING

Electrical Shock Hazard

Do not attempt to modify or alter the drive or drive circuitry in any way not explained in this manual.

Failure to comply could cause death or serious injury and will void warranty. Yaskawa is not responsible for any modification of the product made by the user. Do not modify this product.

NOTICE

Do not modify the drive or option circuitry.

Failure to comply could result in damage to the drive or option and will void warranty. Yaskawa is not responsible for any modification of the product made by the user.

Do not expose the drive or the option to halogen group disinfectants. Do not pack the drive or the option in wooden materials that have been fumigated or sterilized. Do not sterilize the entire package after the product is packed.

Failure to comply could damage the electrical components in the option.

2 Overview

The PG-F3 Option allows the user to connect certain rotary encoders to applicable Yaskawa drives. Suitable rotary encoders include either EnDat 2.1/01, EnDat 2.2/01, or EnDat 2.2/22 by HEIDENHAIN, or HIPERFACE by SICK STEGMANN.

The PG-F3 Option facilitates motor speed feedback to the drive and takes advantage of PM Closed Loop Vector control. The option increases control accuracy and performance.

This PG encoder signal allows the drive to compensate for subtle variations in the load while providing the drive with the necessary data to control the output frequency and maintain an accurate constant speed.

The option reads a 20 kHz maximum input frequency from the PG encoder. Select a PG encoder with 20 kHz maximum output when operating at maximum speed.

◆ Compatible Products

The option can be used with the products in *Table 1*.

Table 1 Compatible Products

Product Series	Model(s)
A1000	All models <1>
L1000A	All models <2>
U1000	All models
U1000L	All models
GA700	All models
GA800	All models
LA700	All models

<1> Only available in software version S1018 and later. The software version (PRG) is indicated on the nameplate affixed to the side of the drive.
<2> EnDat 2.2/22 and HIPERFACE are available in drive software PRG:7016 and later.

3 Receiving

After receiving the option package:

1. Make sure that the option is not damaged and no parts are missing. Contact your sales outlet if the option or other parts appear damaged.

NOTICE: Do not use damaged parts to connect the drive and the option. Failure to comply could damage the drive and option.

2. Confirm that the model number on the option nameplate and the model listed in the purchase order are the same. Refer to ***Figure 1*** on page ***11*** for details. Contact the distributor where the option was purchased or contact Yaskawa or a Yaskawa representative about any problems with the option.

◆ Option Package Contents

Description:	Option	Ground Wire <1>	Screws (M3)	Installation Manual
–	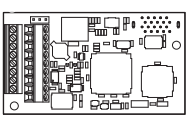			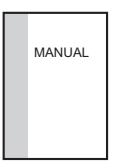
Quantity:	1	1	3 <2>	1

<1> GA700, GA800, and LA700 drives do not use the ground wire.
<2> GA700, GA800, and LA700 drives use two screws only.

◆ Installation Tools

- A Phillips screwdriver. Phillips screw sizes vary by drive capacity.
- A flat-blade screwdriver (blade depth: 0.4 mm (0.02 in), width: 2.5 mm (0.1 in)).
- A pair of diagonal cutting pliers.
- A small file or medium-grit sandpaper.

4 Option Components

◆ PG-F3 Option

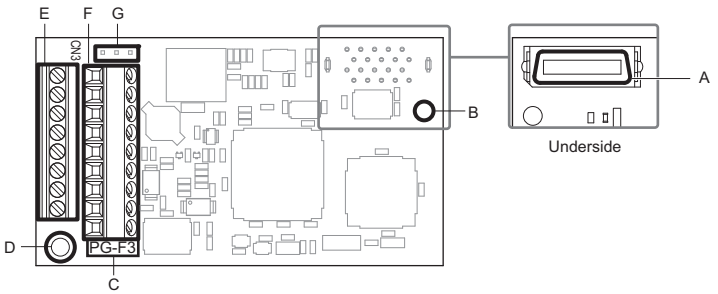

A – Connector (CN5)
B – Installation hole
C – Option model number
D – Ground terminal (FE) and installation hole <1>
E – Terminal block TB1
F – Terminal block TB2
G – Jumper for encoder power supply voltage (CN3) <2>

<1> Connect the provided ground wires during installation. Installation to GA700, GA800, and LA700 drives does not require the ground wire.
<2> Refer to *Table 3* on page *21* for details.

Figure 1 PG-F3 Option Components

◆ Terminal Blocks TB1 and TB2

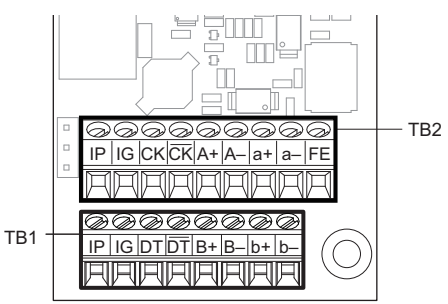

Refer to *Table 10* and *Table 11* on page *40* for details on TB1 and TB2 terminal functions and signal levels.

5 Installation Procedure

◆ Section Safety

⚠ DANGER

Electric Shock Hazard

Do not inspect, connect, or disconnect any wiring while the drive is energized.

Failure to comply will cause death or serious injury.
Before servicing, disconnect all power to the equipment and wait for at least the time specified on the warning label. The internal capacitor remains charged even after the drive is de-energized. The charge indicator LED will extinguish when the DC bus voltage is below 50 Vdc. When all indicators are OFF, measure for unsafe voltages to confirm the drive is safe.

⚠ WARNING

Electrical Shock Hazard

Do not operate equipment with covers removed.

Failure to comply could cause death or serious injury.

The diagrams in this section may include options and drives without covers or safety shields to illustrate details. Reinstall covers and shields before operating the drive and run the drive according to the instructions described in this manual.

Do not allow unqualified personnel to perform work on the drive or option.

Failure to comply could cause death or serious injury.

Only authorized personnel familiar with installation, adjustment, and maintenance of AC drives and options may perform work.

Do not remove covers or touch circuit boards while the drive is energized.

Failure to comply could cause death or serious injury.

⚠ WARNING

Do not use damaged wires, stress the wiring, or damage the wire insulation.

Failure to comply could cause death or serious injury.

Fire Hazard

Tighten all terminal screws to the specified tightening torque.

Loose or overtightened connections could cause erroneous operation and damage to the terminal block or start a fire and cause death or serious injury.

NOTICE

Damage to Equipment

Observe proper electrostatic discharge (ESD) procedures when handling the option, drive, and circuit boards.

Failure to comply could cause ESD damage to circuitry.

Never connect or disconnect the motor from the drive while the drive is outputting voltage.

Improper equipment sequencing could damage the drive.

Do not connect or operate any equipment with visible damage or missing parts.

Failure to comply could further damage the equipment.

Do not use unshielded wire for control wiring.

Failure to comply may cause electrical interference resulting in poor system performance. Use shielded, twisted-pair wires and ground the shield to the ground terminal of the drive.

Properly connect all pins and connectors on the option and drive.

Failure to comply could prevent proper operation and damage equipment.

Confirm that all connections are correct after installing the option and connecting peripheral devices.

Failure to comply could damage the option.

◆ Procedures for Installing and Wiring Options on a Drive

Procedures for installing and wiring options differ depending on the drive model.

Refer to *Table 2* to check the procedures for installing and wiring options on a drive.

Table 2 Procedures for Installing and Wiring Options on a Drive

Product Series	Procedures for Installing and Wiring Options on a Drive	Page
A1000	Procedure A	*15*
L1000A	Procedure A	*15*
U1000	Procedure A	*15*
U1000L	Procedure A	*15*
GA700	Procedure B	*25*
GA800	Procedure B	*25*
LA700	Procedure B	*25*

■ Procedure A

This section shows the procedure to install and wire the option on a 1000-series drive.

Prepare the Drive for the Option

Before beginning the installation procedure:

1. Wire the drive and make the proper connections to drive terminals according to the manual packaged with the drive.
2. Verify that the drive functions normally.
   Refer to ***Figure 2*** for an exploded view of the drive with the option and related components for reference in the installation procedure.

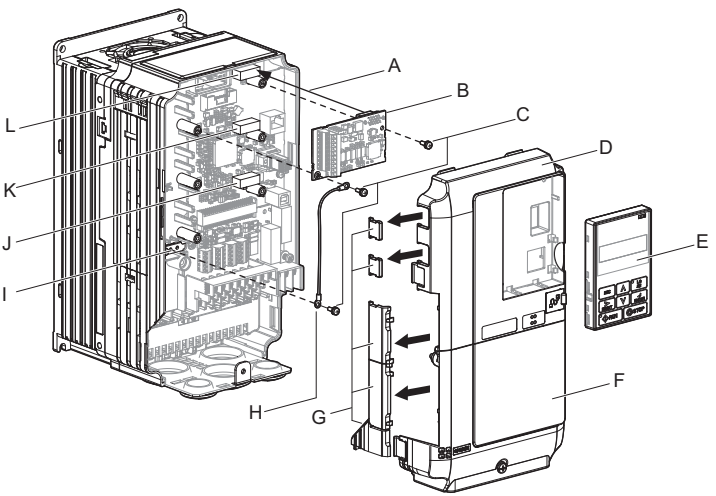

A – Insertion point for CN5
B – Option card
C – Included screws
D – Front cover
E – Keypad
F – Terminal cover
G – Removable tabs for wire routing
H – Ground wire
I – Drive grounding terminal (FE)
J – Connector CN5-A (Not available for PG option installation.)
K – Connector CN5-B (Not available for PG option installation.)
L – Connector CN5-C

Figure 2 Drive Components with Option

Install the Option

Refer to the instructions below to install the option.

Note: Refer to the instruction manual of a specific drive for information on removing and installing the keypads and the covers.

DANGER! *Electrical Shock Hazard. Do not inspect, connect, or disconnect any wiring while the drive is energized. Failure to comply will cause death or serious injury. Before servicing, disconnect all power to the equipment and wait for at least the time specified on the warning label. The internal capacitor remains charged even after the drive is de-energized. The charge indicator LED will extinguish when the DC bus voltage is below 50 Vdc. When all indicators are OFF, measure for unsafe voltages to confirm the drive is safe.*

1. Shut off power to the drive, wait the appropriate amount of time for voltage to dissipate, then remove the keypad (E), front cover (D), and terminal cover (F). Refer to the manual packaged with the drive for details on keypad and cover removal.

NOTICE: *Observe proper electrostatic discharge (ESD) procedures when handling the option, drive, and circuit boards. Failure to comply could cause ESD damage to circuitry.*

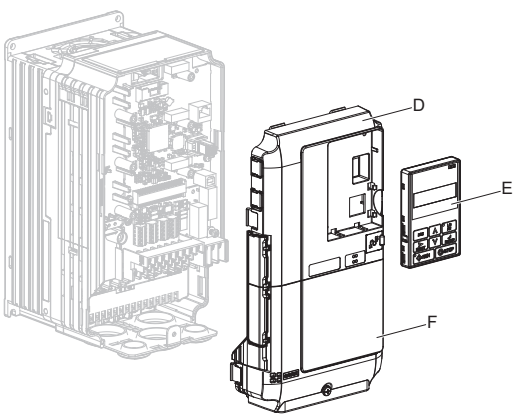

Figure 3 Remove the Front Cover, Terminal Cover, and Keypad

2. Insert the option card (B) into the CN5-C (L) connector on the drive and fasten it into place using the included screws (C). Tighten both screws to 0.5 to 0.6 N·m (4.4 to 5.3 in·lb).

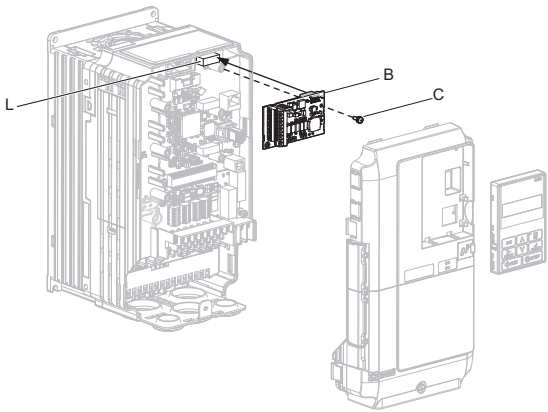

Figure 4 Insert the Option Card

3. Connect the ground wire (H) to the ground terminal (I) using one of the remaining provided screws (C). Connect the other end of the ground wire (H) to the remaining ground terminal and installation hole on the option (B) using the last remaining provided screw (C).

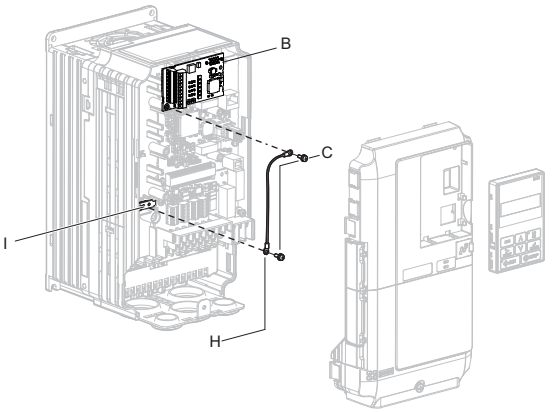

Figure 5 Connect the Ground Wire

Note: The drive has only two ground terminal screw holes (I). Two ground wires should share the same ground terminal when connecting three options.

4. Prepare and connect the wire ends as shown in ***Figure 6*** and ***Figure 7***. ***Refer to Wire Gauges and Tightening Torques on page 38*** to confirm that the proper tightening torque is applied to each terminal. Take particular precaution to ensure that each wire is properly connected and wire insulation is not accidentally pinched into electrical terminals.

WARNING! *Fire Hazard. Tighten all terminal screws according to the specified tightening torque. Loose electrical connections could result in death or serious injury by fire due to overheating electrical connections. Tightening screws beyond the specified tightening torque may result in erroneous operation, damage the terminal block, or cause a fire.*

NOTICE: *Heat shrink tubing or electrical tape may be required to ensure that cable shielding does not contact other wiring. Insufficient insulation may cause a short circuit and damage the option or drive.*

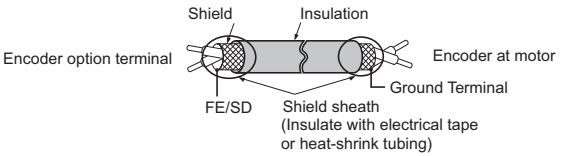

Figure 6 Prepare Ends of Shielded Cable

5. Wire the motor PG encoder to the terminal block on the option according to *Figure 7*.
Refer to *Connection Diagram on page 33* for the PG-F3 Option and PG Encoder connection diagram.
Refer to *Terminal Functions on page 40* for a detailed description of the option terminal functions.

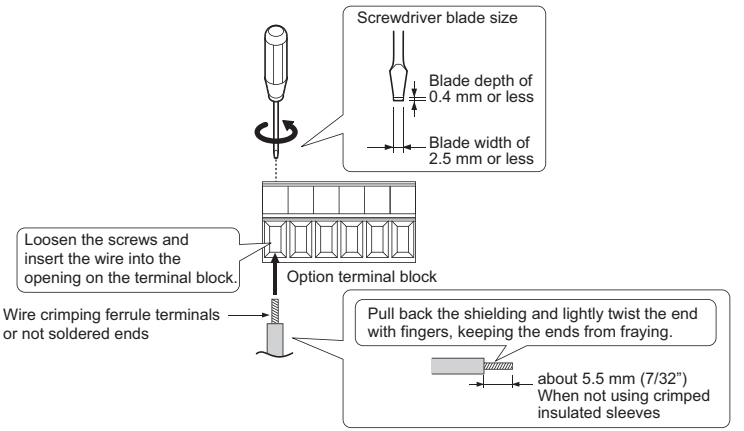

Figure 7 Connect Cable Wiring

6. Set the PG encoder power supply voltage level (IP) to 5 V or 8 V using jumper CN3 on the option as shown in ***Table 3***.

NOTICE: *Do not select the wrong voltage level for the PG encoder. Failure to comply could cause erroneous operation or damage the PG encoder.*

Table 3 Set IP with Jumper CN3

Voltage Level	Jumper CN3 Position
5 V ± 5% (default)	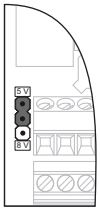
8 V ± 10%	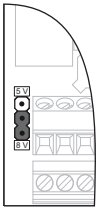

7. Route the option wiring inside the enclosure as shown in *Figure 8*-B. Take proper precautions so that the front covers will easily fit back onto the drive.
Users may also choose to route the option wiring through openings on the front cover of some models. Remove the perforated tabs on the left side of the front cover as shown in *Figure 8*-A to create the necessary openings on these models.
Refer to the Peripheral Devices & Options section of the drive instruction manual for more information.

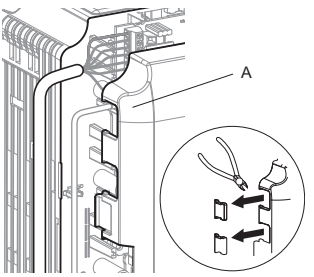

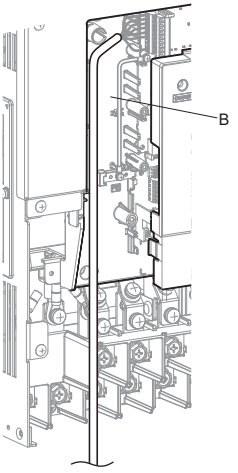

A – Route wires through the openings provided on the left side of the front cover. *<1>*

B – Use the open space provided inside the drive to route option wiring.

<1> The drive will not meet Enclosed wall-mounted type (IP20/UL Type 1) requirements if wiring is exposed outside the enclosure.

Figure 8 Wire Routing Examples

8. Reattach the front covers of the drive (D, F) and the keypad (E).

NOTICE: *Do not pinch cables between the front covers and the drive. Failure to comply could cause erroneous operation.*

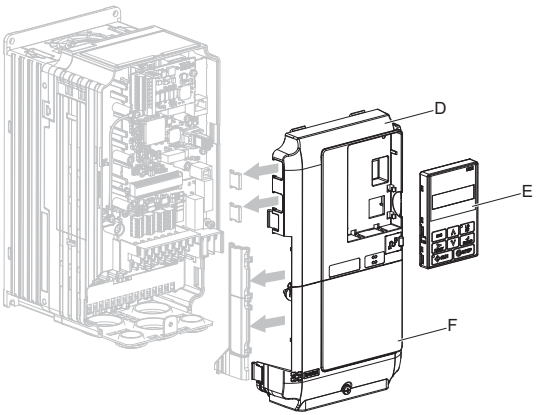

Figure 9 Replace the Front Covers and Keypad

9. Connect the PG encoder outputs to the option.

10. Set drive parameters in *Table 12* for proper motor rotation.

- **Confirming Motor Rotation with EnDat 2.1/01, EnDat 2.2/01, or HIPERFACE**
  The leading pulse determines the motor rotation direction. A encoder signals with leading pulse A are considered to be rotating forward (counter-clockwise when viewing rotation from motor load side).

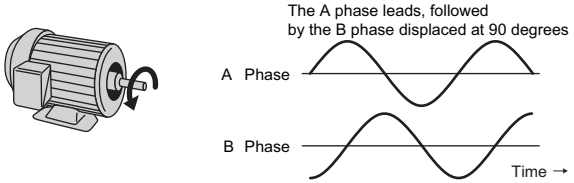

Figure 10 Displacement of A and B Phases

- **Confirming Motor Rotation with EnDat 2.2/22**
  EnDat 2.2/22 uses serial data transmission and lacks A and B phases, so it is necessary to refer to monitor U1-05 to determine the direction of rotation.
  After connecting the encoder outputs to the option, apply power to the drive and manually rotate the motor and check the rotation direction by viewing monitor U1-05 on the keypad.

11. Energize the drive and manually rotate the motor to check the rotation direction using monitor U1-05 on the keypad.

WARNING! *Sudden Movement Hazard. Lock out the Run circuit to prevent issuing a Run command prior to manually rotating the motor shaft with the drive energized. Failure to comply could cause death or serious injury.*

U1-05 Value	Motor Direction
Negative	Reverse
Positive	Forward

Note: Setting A1-03 = 1110, 2220, or 3330 will reset F1-05 to factory default. Re-set the parameter to switch direction again.

■ Procedure B

This section shows the procedure to install and wire the option on a GA700, GA800, and LA700 drive.

Prepare the Drive for the Option

Before beginning the installation procedure:

1. Wire the drive and make the proper connections to drive terminals according to the manual packaged with the drive.
2. Verify that the drive functions normally.
   Refer to ***Figure 11*** for an exploded view of the drive with the option and related components for reference in the installation procedure.

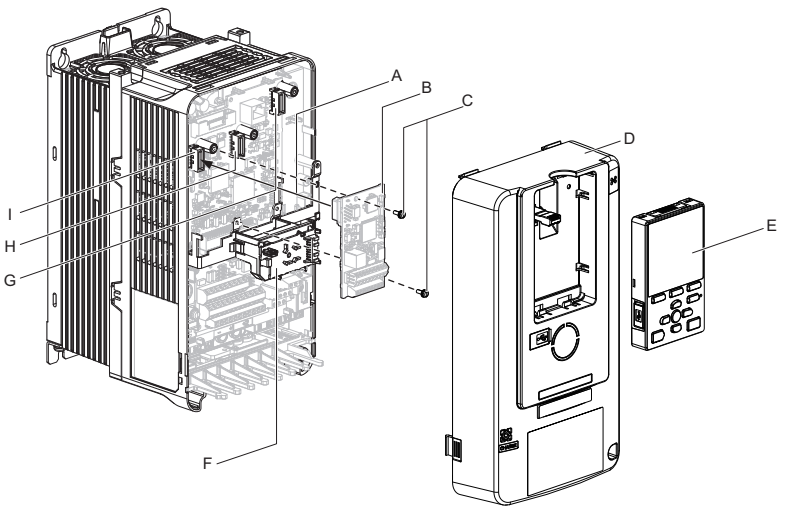

A – Insertion point for CN5 connector
B – PG-F3 option
C – Included screws
D – Drive front cover
E – Keypad
F – LED Status Ring board
G – Connector CN5-A (Not available for PG option installation.)
H – Connector CN5-B (Not available for PG option installation.)
I – Connector CN5-C

Figure 11 Drive Components with Option

Install the Option

DANGER! *Electrical Shock Hazard. Do not inspect, connect, or disconnect any wiring while the drive is energized. Failure to comply will cause death or serious injury. Before servicing, disconnect all power to the equipment and wait for at least the time specified on the warning label. The internal capacitor remains charged even after the drive is de-energized. The charge indicator LED will extinguish when the DC bus voltage is below 50 Vdc. When all indicators are OFF, measure for unsafe voltages to confirm the drive is safe.*

1. Shut off power to the drive, wait the appropriate amount of time for voltage to dissipate, confirm all charge indicator LEDs extinguish, then remove the front cover (D) including the keypad (E).
   Refer to the manual packaged with the drive for details on cover removal.

NOTICE: *Observe proper electrostatic discharge (ESD) procedures when handling the option, drive, and circuit boards. Failure to comply could cause ESD damage to circuitry.*

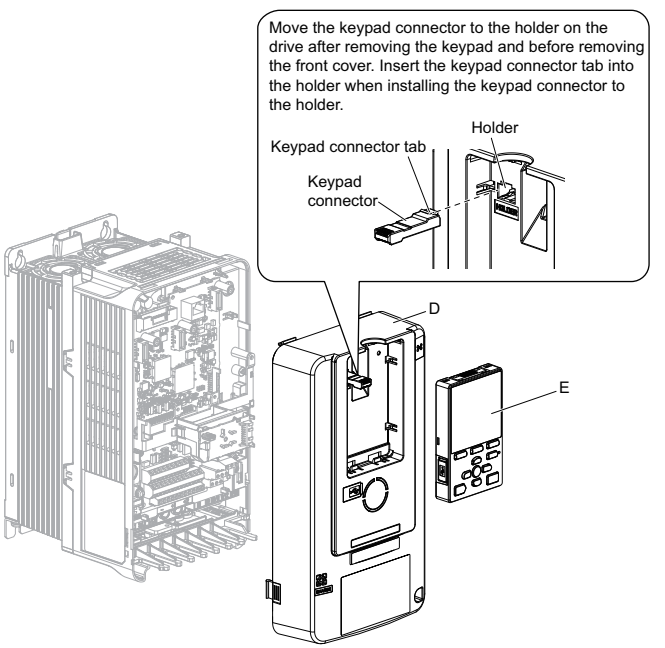

Figure 12 Remove the Front Cover Including Keypad

2. Carefully remove the LED Status Ring board (F) and place it on the right side of the drive using the temporary placement holes.
Refer to the manual packaged with the drive for details on removing the LED Status Ring board.

NOTICE: *Do not remove the LED Status Ring board cable connector. Failure to comply could cause erroneous operation and damage the drive.*

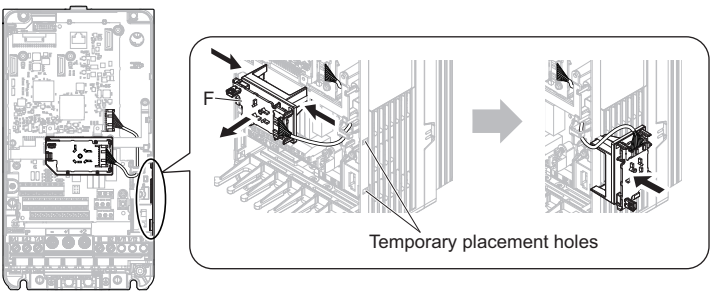

Figure 13 Remove the LED Status Ring Board

3. Insert the option card (B) into the CN5-C (I) connector on the drive and fasten it into place using the included screws (C). Tighten both screws to 0.5 to 0.6 N·m (4.4 to 5.3 in·lb).

Note: Installing the option card on GA700, GA800, and LA700 drives requires only two screws and does not require a ground wire. The option package ships with three screws and ground wires for installation on other product series. Do not use the ground wire or the extra screw.

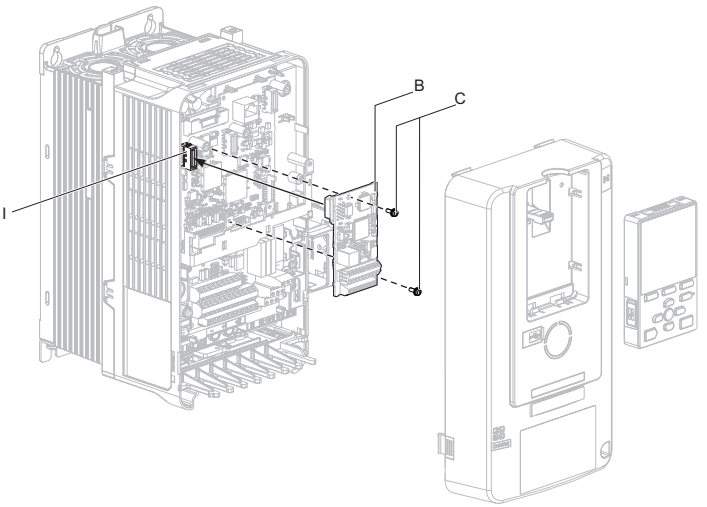

Figure 14 Insert the Option Card

4. Prepare the wire ends as shown in ***Figure 15***.

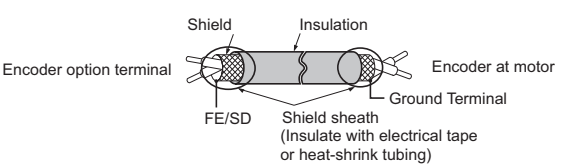

Figure 15 Prepare Ends of Shielded Cable

5. Wire the motor PG encoder to the terminal block on the option according to *Figure 16*.
Refer to *Connection Diagram on page 33* for the PG-F3 Option and PG Encoder connection diagram.
Refer to *Terminal Functions on page 40* for a detailed description of the option terminal functions.

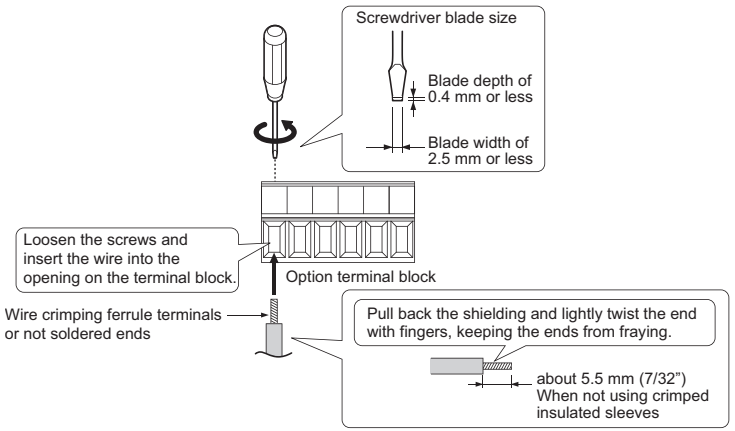

Figure 16 Connect Cable Wiring

6. Set the PG encoder power supply voltage level (IP) to 5 V or 8 V using jumper CN3 on the option as shown in ***Table 4***.

NOTICE: *Do not select the wrong voltage level for the PG encoder. Failure to comply could cause erroneous operation or damage the PG encoder.*

Table 4 Set IP with Jumper CN3

Voltage Level	Jumper CN3 Position
5 V ± 5% (default)	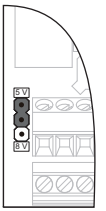
8 V ± 10%	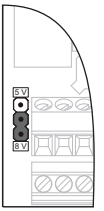

7. Reattach the LED Status Ring board (F) and the front cover of the drive (D) including the keypad (E).

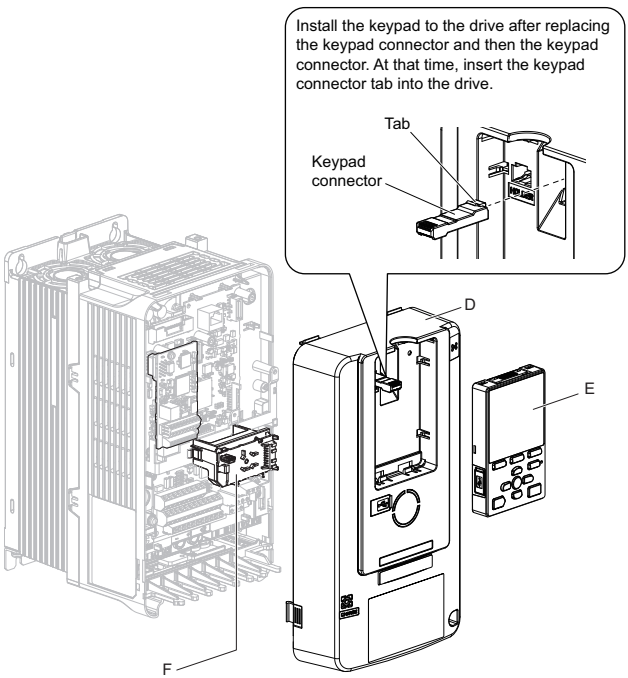

Figure 17 Replace the LED Status Ring Board, Front Cover, and Keypad

8. Connect the PG encoder outputs to the option.

9. Set drive parameters in *Table 12* for proper motor rotation.

- **Confirming Motor Rotation with EnDat 2.1/01, EnDat 2.2/01, or HIPERFACE**
  The leading pulse determines the motor rotation direction. A encoder signals with leading pulse A are considered to be rotating forward (counter-clockwise when viewing rotation from motor load side).

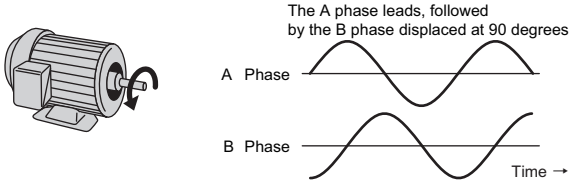

Figure 18 Displacement of A and B Phases

- **Confirming Motor Rotation with EnDat 2.2/22**
  EnDat 2.2/22 uses serial data transmission and lacks A and B phases, so it is necessary to refer to monitor U1-05 to determine the direction of rotation.
  After connecting the encoder outputs to the option, apply power to the drive and manually rotate the motor and check the rotation direction by viewing monitor U1-05 on the keypad.

10. Energize the drive and manually rotate the motor to check the rotation direction using monitor U1-05 on the keypad.

WARNING! *Sudden Movement Hazard. Lock out the Run circuit to prevent issuing a Run command prior to manually rotating the motor shaft with the drive energized. Failure to comply could cause death or serious injury.*

Note: Setting A1-03 to 1110, 2220, or 3330 will reset F1-05 to factory default. Re-set the parameter to switch direction again.

◆ Connection Diagram

- **Wiring EnDat 2.1/01 or EnDat 2.2/01 Encoders**

  Wire the motor encoder to the terminal block on the option using a HEIDENHAIN 17-conductor cable.

  The signal “Sensor Up”must be connected to terminal IP on the PG-F3 option for cables longer than 10 m. Additionally, the “Sensor 0 V”must be connected to terminal IG.

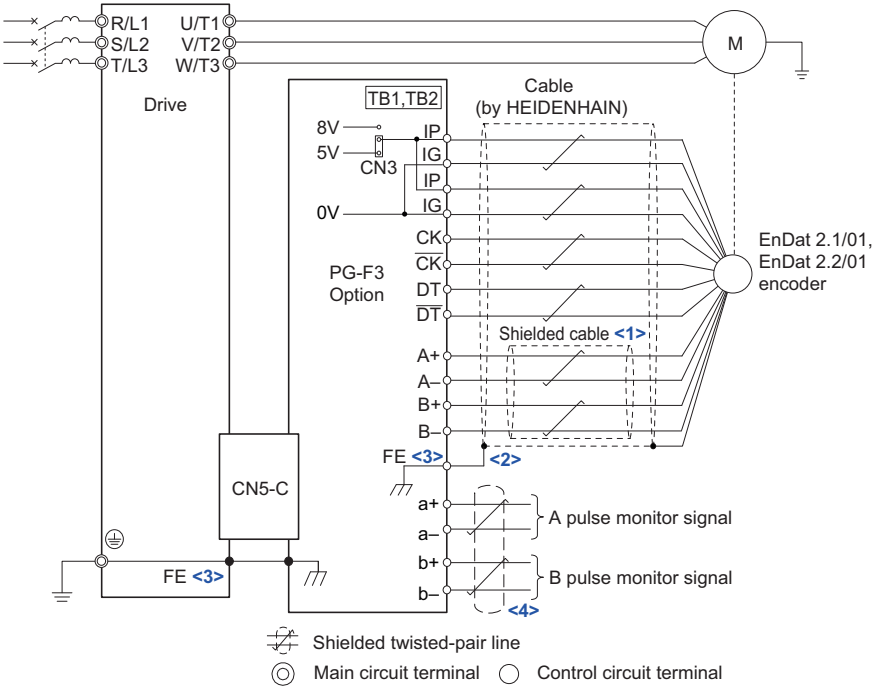

<1> Properly connect the cable shield to terminal IG on the option Terminal Block TB2 or remove the ground connection on both ends.

<2> Ground the shield on the PG encoder side and the drive side. Remove the shield ground from one end of the signal line or remove the shield ground connection on both ends if electrical interference problems arise in the PG encoder signal.

<3> Connect one of the included ground wires between the option FE terminal and the drive ground terminal connected to earth ground for 1000-Series installation.
Fasten the option FE terminal in the ground plate using one of the included screws for GA700, GA800, and LA700 installation.

<4> Yaskawa recommends using shielded lines or shielded twisted-pair lines.

Figure 19 PG-F3 Option and Encoder Connection Diagram (EnDat 2.1/01, EnDat 2.2/01)

Table 5 Encoder Cable Specification (EnDat 2.1/01, EnDat 2.2/01)

Option Terminal	Encoder Cable	
	Color	Encoder Signal
IP	Brown/Green	Up
	Blue	Sensor Up
IG	White/Green	0V
	White	Sensor 0V
CK	Purple	CLOCK
$\overline{\text{CK}}$	Yellow	$\overline{\text{CLOCK}}$
DT	Gray	DATA
$\overline{\text{DT}}$	Pink	$\overline{\text{DATA}}$
A+	Green/Black	A+
A–	Yellow/Black	A–
B+	Blue/Black	B+
B–	Red/Black	B–

- **Wiring an EnDat 2.2/22 Encoder**
  Wire the motor encoder to the terminal block on the option using a HEIDENHAIN 8-conductor cable.
  The signal “Sensor Up” must be connected to terminal IP on the PG-F3 option for cables longer than 10 m. Additionally, the “Sensor 0 V” must be connected to terminal IG.

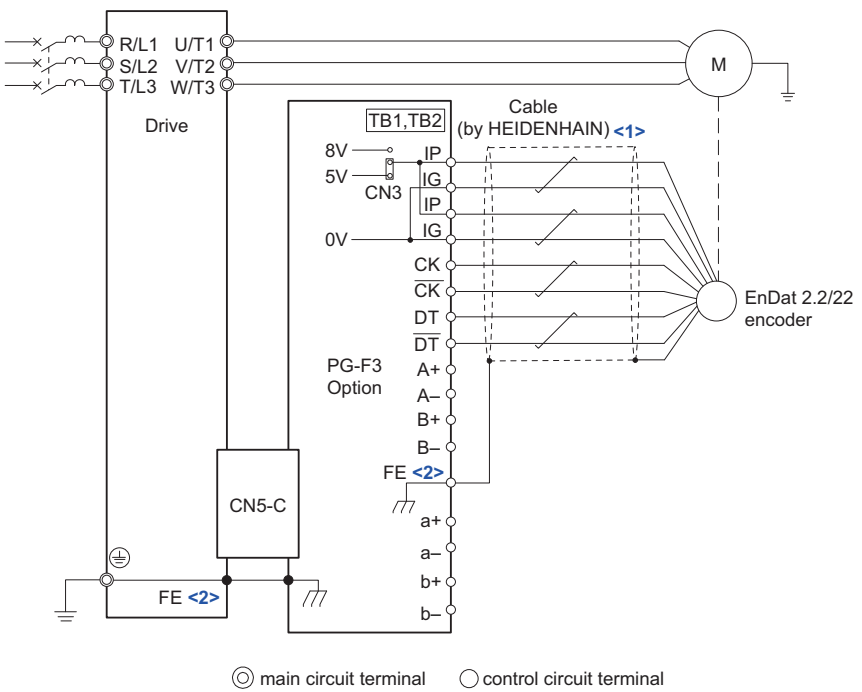

<1> Ground the shield on the PG encoder side and the drive side. Remove the shield ground from one end of the signal line or remove the shield ground connection on both ends if electrical interference problems arise in the PG encoder signal.
<2> Connect one of the included ground wires between the option FE terminal and the drive ground terminal connected to earth ground for 1000-Series installation.
Fasten the option FE terminal in the ground plate using one of the included screws for GA700, GA800, and LA700 installation.

Figure 20 PG-F3 Option and Encoder Connection Diagram (EnDat 2.2/22)

Table 6 Encoder Cable Specification (EnDat 2.2/22)

Option Terminal	Encoder Cable	
	Color	Encoder Signal
IP	Brown/Green	Up
	Blue	Sensor Up
IG	White/Green	0V
	White	Sensor 0V
CK	Purple	CLOCK
$\overline{\text{CK}}$	Yellow	$\overline{\text{CLOCK}}$
DT	Gray	DATA
$\overline{\text{DT}}$	Pink	$\overline{\text{DATA}}$
A+	–	–
A–	–	–
B+	–	–
B–	–	–

- **Wiring an HIPERFACE Encoder**
  Wire the motor encoder to the terminal block on the option using a SICK STEGMANN 8-conductor cable.

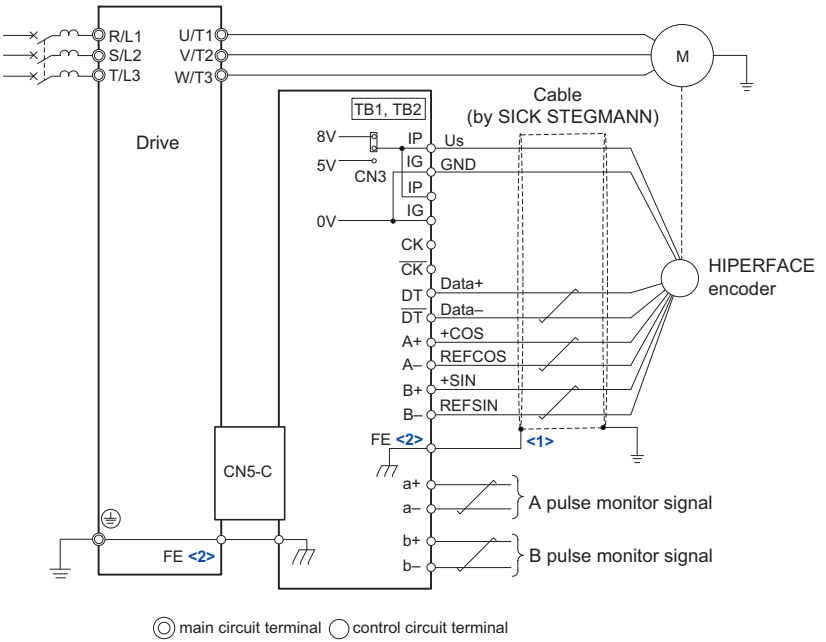

<1> Ground the shield on the PG encoder side and the drive side. Remove the shield ground from one end of the signal line or remove the shield ground connection on both ends if electrical interference problems arise in the PG encoder signal.
<2> Connect one of the included ground wires between the option FE terminal and the drive ground terminal connected to earth ground for 1000-Series installation.
Fasten the option FE terminal in the ground plate using one of the included screws for GA700, GA800, and LA700 installation.

Figure 21 PG-F3 Option and Encoder Connection Diagram (HIPERFACE)

Table 7 Encoder Cable Specification (HIPERFACE)

Option Terminal	Encoder Cable	
	Color	Encoder Signal
IP	Red	Us
IG	Blue	GND
CK	–	–
$\overline{CK}$	–	–
DT	Gray/Yellow	DATA+
$\overline{DT}$	Green/Purple	DATA-
A+	Pink	+COS
A-	Black	REFCOS
B+	White	+SIN
$\overline{B}$	Brown	REFSIN

◆ Wire Gauges, Tightening Torques, and Crimp Terminals

■ Wire Gauges and Tightening Torques

Wire gauge and torque specifications are listed in *Table 8*.

Table 8 Wire Gauges and Tightening Torques

Terminal Signal	Screw Size	Tightening Torque N·m (in·lb)	Bare Cable		Crimp Terminals		Wire Type
			Recomm. Gauge mm²	Applicable Gauges mm²	Applicable Gauges mm²	Recomm. Gauge mm²	
a+, a–, b+, b–, FE	M2	0.22 to 0.25 (1.95 to 2.21)	0.75 (18 AWG)	Stranded wire: 0.25 to 1.0 (24 to 17 AWG) Solid wire: 0.25 to 1.5 (24 to16 AWG)	0.5 (20 AWG)	0.25 to 0.5 (24 to 20 AWG)	Shielded twisted pair, etc.
IP, IG, DT $\overline{DT}$, B+, B– CK, $\overline{CK}$, A+, A–			*<1>*		–	–	–

<1> For EnDat 2.1/01 and EnDat 2.2/01, use a HEIDENHAIN 17-pin cable. Refer to *Encoder Cable Specification (EnDat 2.1/01, EnDat 2.2/01) on page 34* for details.
For EnDat 2.2/22, use a HEIDENHAIN 8-pin cable. *Refer to Encoder Cable Specification (EnDat 2.2/22) on page 36* for details.
For HIPERFACE, use a SICK STEGMANN 8-pin cable. *Refer to Encoder Cable Specification (HIPERFACE) on page 38* for details.

■ Crimp Terminals

Yaskawa recommends using CRIMPFOX 6 by Phoenix Contact or equivalent crimp terminals with the specifications listed in *Table 9* for wiring to ensure proper connections.

Note: Properly trim wire ends so loose wire ends do not extend from the crimp terminals.

Table 9 Crimp Terminal Sizes

	Wire Gauge mm^2	Phoenix Contact Model	L mm (in)	d1 mm (in)	d2 mm (in)
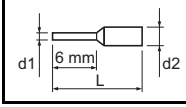	0.25 (24 AWG)	AI 0.25 - 6YE	10.5 (13/32)	0.8 (1/32)	2 (5/64)
	0.34 (22 AWG)	AI 0.34 - 6TQ	10.5 (13/32)	0.8 (1/32)	2 (5/64)
	0.5 (20 AWG)	AI 0.5 - 6WH	14 (9/16)	1.1 (3/64)	2.5 (3/32)

◆ Terminal Functions

Table 10 Option Terminal Functions (EnDat)

Terminal Block	Terminal	Function	Description
TB1	IP	Encoder power supply	Supplies power to the encoder. • Jumper with terminal CN3 to select the power supply voltage, 5 V or 8 V. • Voltage range: 5 V ±5%, 330 mA 8 V ±10%, 150 mA **Note:** The number of connections to terminals IP and IG differs by wiring length when the power supply is set for +5 V ±5%. • Up to 10 m: One or two connections to both IP and IG. • 10 to 20 m: Two connections to both IP and IG.
	IG	Encoder power supply common	
	DT	Communication data signal I/O	Reads and processes encoder data. Signal level: RS-485 protocol
	$\overline{\text{DT}}$	Inverse communication data signal I/O	
	B+	B phase signal input	Input for the B phase sine-wave from the encoder. • Maximum input frequency: 20 kHz • Input signal differential: B+ - B– 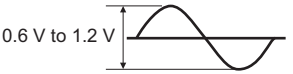 **Note:** Not available when using EnDat 2.2/22.
	B–	Inverse B phase signal input	
	b+	B phase monitor signal output	Outputs a ratio of the B phase frequency. • Output method: Line driver • Output voltage: RS-422 level • Possible resolution: 1/n Set F1-06 to monitor the pulse signal. Varies by drive model. **Note:** Not available when using EnDat 2.2/22.
	b–	Inverse B phase monitor signal output	

Terminal Block	Terminal	Function	Description
TB2	IP	Encoder power supply	Supplies power to the encoder. Connects to terminal IP on the option.
	IG	Encoder power supply common	Supplies power to the encoder. Connects to terminal IG on the option.
	CK	Communication clock signal output	Outputs the communication clock signal to the encoder. Signal level: RS-485 protocol
	$\overline{\text{CK}}$	Inverse communication clock signal output	
	A+	A phase signal input	Input for the A phase sine-wave from the encoder. • Maximum input frequency: 20 kHz • Input signal differential: A+ - A– 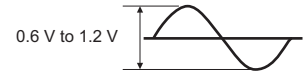 **Note:** Not available when using EnDat 2.2/22.
	A–	Inverse A phase signal input	
	a+	A phase monitor signal output	Outputs a ratio of the A phase frequency. • Output method: Line driver • Output voltage: RS-422 level • Possible resolution ratio: 1/n Set F1-06 to monitor the pulse signal. Varies by drive model. **Note:** Not available when using EnDat 2.2/22.
	a–	Inverse A phase monitor signal output	
	FE	Ground	Ground terminal for shielded cable.

Table 11 Option Terminal Functions (HIPERFACE)

Terminal Block	Terminal (Signal)	Function	Description
TB1	IP (Us)	Encoder power supply	Supplies power to the encoder. • Jumper with terminal CN3 to select the power supply voltage, 5 V or 8 V. • Voltage range: 5 V ±5%, 330 mA 8 V ±10%, 150 mA
	IG (GND)	Encoder power supply common	
	DT (Data+)	Communication data signal I/O	Reads and processes encoder data. Signal level: RS-485 protocol
	$\overline{\text{DT}}$ (Data-)	Inverse communication data signal I/O	
	B+ (+SIN)	SIN signal input	Input for the sine-wave from the encoder. • Maximum input frequency: 20 kHz • Input signal differential: +SIN - REFSIN 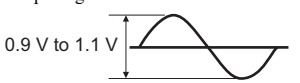
	B- (REFSIN)	Inverse SIN signal input	
	b+	SIN pulse monitor signal output	Outputs a ratio of the sine pulse frequency. • Output method: Line driver • Output voltage: RS-422 level • Possible resolution: 1/n (n = 0 to 32) Set F1-06 to monitor the pulse signal.
	b-	Inverse SIN pulse monitor signal output	
TB2	IP (Us)	Encoder power supply	Supplies power to the encoder. Connects to terminal IP on the option.
	IG (GND)	Encoder power supply common	Supplies power to the encoder. Connects to terminal IG on the option.
	CK	–	Not used.
	$\overline{\text{CK}}$	–	
	A+ (+COS)	COS signal input	Input for the cosine-wave from the encoder. • Maximum input frequency: 20 kHz • Input signal differential: +COS - REFCOS 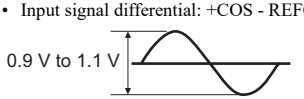
	A- (RSFCOS)	Inverse COS signal input	
	a+	COS pulse monitor signal output	Outputs pulses of the cosine signal frequency ratio. • Output method: Line driver • Output voltage: RS-422 level • Possible resolution ratio: 1/n (n = 0 to 32) Set F1-06 to monitor the pulse signal.
	a-	Inverse COS pulse monitor signal output	
	FE	Ground	Ground terminal for shielded cable.

6 Related Parameters

The parameters in *Table 12* set the drive for operation with the option. Set parameters as needed. Refer to the manual packaged with the drive for details on setting parameters.

Note: Hex.: MEMOBUS addresses used to change parameters over network communication are represented in hexadecimal numbers.

Table 12 Related Parameters

No. (Hex.)	Name	Description	Control Method	Values
A1-02 (102)	Control Method Selection	0: V/f Control 1: Closed Loop V/f Control 2: Open Loop Vector Control 3: Closed Loop Vector Control 4: Advanced Open Loop Vector Control 5: PM Open Loop Vector Control 6: PM Advanced Open Loop Vector 7: PM Closed Loop Vector Control 8: EZ Open Loop Vector Control **Note:** Set to 7 when using PG-F3.	All Modes	Default: <1> Range: <1>
F1-01 (380) <2>	PG 1 Pulses per Revolution	Sets the number of pulses per motor revolution.	V/f w/ PG CLV AOLV CLV/PM	Default: <1> Min: <1> Max: <1>
F1-02 (381)	PG Feedback Loss Selection	Selects the stopping method after PG disconnect (PGo). 0: Ramp to stop 1: Coast to stop 2: Fast Stop (Use C1-09) 3: Alarm only 4: No alarm display **NOTICE**: Use settings 3 and 4 under special circumstances only. Failure to comply could damage the motor and connected machinery.	V/f w/ PG CLV AOLV/PM CLV/PM	Default: 1 Range: <1>
F1-03 (382)	Operation Select at Overspeed	Selects the stopping method after detecting overspeed (oS). 0: Ramp to stop 1: Coast to stop 2: Fast Stop (Use C1-09) 3: Alarm only **NOTICE**: Use setting 3 under special circumstances only. Failure to comply could damage the motor and connected machinery.	V/f w/ PG CLV AOLV CLV/PM	Default: 1 Range: 0 to 3

No. (Hex.)	Name	Description	Control Method	Values
F1-04 (383)	Operation Select at Overspeed	0: Ramp to stop 1: Coast to stop 2: Fast Stop (Use C1-09) 3: Alarm only **NOTICE**: Use setting 3 under special circumstances only. Failure to comply could damage the motor and connected machinery.	V/f w/ PG CLV AOLV AOLV/PM CLV/PM	Default: <I> Range: 0 to 3
F1-05 (384)	PG 1 Rotation Selection	0: Pulse A leads 1: Pulse B leads	V/f w/ PG CLV AOLV CLV/PM	Default: <I> Range: 0, 1
F1-06 (385)	PG 1 Division Rate for Pulse Mon	Sets the division ratio for encoder pulse output. Set as a three-digit number: x is the first digit, y is the second digit, and z is the third digit: When using the PG-F3 option, the drive disregards the value set for "x", and uses the formula 1/yz to determine the division rate for the pulse generator. The setting range is 1/32 : 1.	V/f w/ PG CLV AOLV CLV/PM	Default: 1 Min: 1 Max: 132
F1-08 (387)	Overspeed Detection Level	Sets the level for detecting overspeed (oS) as a percentage of the maximum output frequency.	V/f w/ PG CLV AOLV AOLV/PM CLV/PM	Default: 115 Min: 0 Max: 120
F1-09 (388)	Overspeed Detection Delay Time	Sets the time required for the motor to exceed the level set in F1-08 to trigger a fault (oS).	V/f w/ PG CLV AOLV AOLV/PM CLV/PM	Default: 0.0 Min: 0.0 Max: 2.0
F1-10 (389)	Speed Deviation Detection Level	Sets the degree of speed deviation to trigger a dEv fault. Set as a percentage of the maximum output frequency.	V/f w/ PG CLV AOLV AOLV/PM CLV/PM	Default: 10 Min: 0 Max: 50
F1-11 (38A)	Speed Deviation Detect Delay Time	Sets the time required for a speed deviation situation to trigger a fault.	V/f w/ PG CLV AOLV AOLV/PM CLV/PM	Default: 0.5 Min: 0.0 Max: 10.0
F1-14 (38D)	PG Open-Circuit Detection Time	Sets the time in seconds for encoder disconnect to be detected. **Note:** An ov or oC error may occur depending on motor speed and load conditions.	V/f w/ PG CLV AOLV/PM CLV/PM	Default: 2.0 Min: 0.0 Max: 10.0
F1-18 (3AD)	Deviation 3 Detection Selection	0: Disabled n: Number of times a dv3 situation must be detected to trigger a fault.	CLV/PM	Default: 10 Min: 0 Max: 10

No. (Hex.)	Name	Description	Control Method	Values
F1-19 (3AE)	Deviation 4 Detection Selection	0: Disabled n: Number of times a dv4 situation must be detected to trigger a fault.	CLV/PM	Default: 128 Min: 0 Max: 5000
F1-20 (3B4)	PG 1 Hardware Disconnect	0: Disabled. No fault if the connection is lost. 1: Enabled. Fault if connection is lost.	CLV CLV/PM	Default: 1 Range: 0, 1
F1-50 (3D2)	Encoder Selection	0: EnDat 2.1/2.2 Serial+Sin/Cos 1: EnDat 2.2 Serial only 2: HIPERFACE	CLV/PM	Default: 0 Range: 0 to 2
F1-51 (3D3)	PGoH Detection Level	Sets the level for detecting a PG Hardware Fault (PGoH). Set as a percentage of $\sqrt{\mathrm{Sin}\theta^2 + \mathrm{Cos}\theta^2}$.	CLV/PM	Default: 80 Min: 1 Max: 100
F1-52 (3D4)	Communication Speed Selection of Serial Encoder	Sets the communications speed between the serial encoder and the PG-F3 Option. This parameter can be set when F1-50 = 1. EnDat/HIPERFACE 0: 1 M/ 9600 bps 1: 500 k/19200 bps 2: 1 M/38400 bps (same as setting 0 when using EnDat 2.2/22) 3: 1 M/38400 bps (same as setting 0 when using EnDat 2.2/22)	CLV/PM	Default: 0 Range: 0 to 3

<1> Varies by drive model.
<2> Use the following formula to calculate the number of output pulses for the PG encoder:

$$\text{Operation at maximum output frequency (Hz)} = \frac{\text{Motor speed at maximum frequency output (r/min)}}{60} \times \text{PG rating (p/rev)}$$

7 Troubleshooting

◆ Drive-Side Error Codes

Table 13 lists the various fault codes related to the option and pulse generator. Refer to the drive Technical Manual for further details on fault codes.

Confirm the following items upon receiving an error notification on the drive keypad:

1. Correct and secure cable connections including ground wiring.
2. Proper option installation.
3. No momentary power loss occurred.

Table 13 Fault Displays, Causes, and Possible Solutions

Keypad Display		Fault Name
dEv	dEv	Speed Deviation (for Control Mode with PG)
		The deviation between the speed reference and speed feedback is greater than the setting in F1-10 for longer than the time set to F1-11.
Cause		**Possible Solution**
The load is too heavy.		Reduce the load.
The acceleration and deceleration times are set too short or too long.		Increase or decrease the acceleration and deceleration times (C1-01 through C1-08).
The load is locked up.		Check the machine.
Parameters are set inappropriately.		Check F1-10 and F1-11 settings.
Motor brake is engaged.		Ensure the motor brake releases properly.
Brake control sequence is incorrect.		Correct the brake control sequence and verify that the brake is released.
Keypad Display		**Fault Name**
dv3	dv3	Inversion Detection
		• Torque reference and acceleration are in opposite directions. • The speed reference and actual motor speed differ by over 30% for the number of pulses set to parameter F1-18.
Cause		**Possible Solution**
E5-11 is not set properly.		Set the value for Δθ to E5-11 as specified on the motor nameplate.
The PG encoder is replaced or rotational direction for the motor is changed.		Perform the Z-pulse Offset Tuning (T2-01 = 3).
An external force on the load side caused the motor to move.		• Make sure the motor is rotating in the proper direction. • Investigate problems on the load side causing motor rotation in the opposite direction and counteract the problem.

Noise interference along the encoder cable is affecting the A channel or B channel. The encoder is disconnected or is not wired properly.	1. Confirm that the PG encoder is properly connected and all shielded lines are properly grounded. 2. Cycle power. Replace the PG option card or the PG encoder if the problem continues after cycling power.
The encoder rotational direction set to F1-05 is in the opposite direction of the motor wiring.	Make sure motor wiring for each phase (U, V, W) is connected properly.
The PG option or PG encoder is damaged.	If the problem continues after correcting wiring and cycling power, replace the PG option or the PG encoder.
Keypad Display	**Fault Name**
dv4	Inversion Prevention Detection
	Pulses indicate that the motor is rotating in the opposite direction of the speed reference. Set the number of pulses to trigger inverse detection to F1-19. **Note:** Set F1-19 = 0 to disable inverse detection in applications where the motor may rotate in the opposite direction of the speed reference and avoid nuisance faults.
Cause	**Possible Solution**
An external force on the load side caused the motor to move.	• Confirm that the motor is rotating in the proper direction. • Investigate problems on the load side causing motor rotation in the opposite direction and counteract the problem.
E5-11 is not set properly.	Set the value for Δθ to E5-11 as specified on the motor nameplate.
The PG encoder is replaced or rotational direction for the motor is changed.	Perform the Z-pulse Offset Tuning (T2-01 = 3).
Noise interference along the encoder cable is affecting the A or B phase.	Check encoder wiring and make sure all wiring including shielded wiring is properly connected.
Encoder is disconnected or is not wired properly, or the PG option or the encoder are damaged.	Check PG encoder wiring and confirm that all wiring, including shielded wiring, is properly connected.
The PG option or PG encoder is damaged.	If the problem continues after correcting wiring and cycling power, replace the PG option or the PG encoder.
Keypad Display	**Fault Name**
oFA00	Non-compatible option is connected to drive port CN5-A.
Cause	**Possible Solution**
The option card installed into port CN5-A is incompatible with the drive.	Use only compatible options. The PG option cannot be connected to CN5-A. For other options, refer to the Installation Manual for that option.

Keypad Display		Fault Name
oFb00	oFb00	Non-compatible option is connected to drive port CN5-B.
Cause		**Possible Solution**
The option card installed into port CN5-A is incompatible with the drive.		Connect the option to the correct option port. Note: When connecting DO-A3, AO-A3, PG-B3, or PG-X3, use CN5-B. When connecting only one PG option, use CN5-C.
Keypad Display		**Fault Name**
oFC01	oFC01	Option Connection Error at drive port CN5-C
Cause		**Possible Solution**
Option at drive port CN5-C was changed during run.		De-energize the drive and plug the option into the drive according to Installation Procedure on Page *12*.
Keypad Display		**Fault Name**
oFC50	oFC50	PG Encoder Option A/D Conversion Error Error with the A/D conversion level (VCC level), or A/D conversion timed out.
Cause		**Possible Solution**
The option is damaged.		Replace the option.
Keypad Display		**Fault Name**
oFC51	oFC51	PG Encoder Option Analog Circuit Error Incorrect signal level (+2.5 V signal)
Cause		**Possible Solution**
The option is damaged.		Replace the option.
Keypad Display		**Fault Name**
oFC52	oFC52	PG Encoder Communication Timeout Serial encoder timed out waiting to receive data
Cause		**Possible Solution**
Encoder wiring is incorrect.		Correct the wiring.
Encoder cable is disconnected.		Reconnect the cable.
F1-50 (Encoder selection) is incorrect.		Set F1-50 (Encoder selection) according to the encoder connected to the drive.
Keypad Display		**Fault Name**
oFC53	oFC53	PG Encoder Communication Data Error Serial encoder CRC checksum error
Cause		**Possible Solution**
Encoder wiring is incorrect.		Correct the wiring.
Encoder cable is disconnected.		Reconnect the cable.

Keypad Display		Fault Name
oFC54	oFC54	PG Encoder Error
		Alarm reading EnDat absolute position data from the encoder (OR flag from EnDat error for overvoltage, undervoltage, etc.)
Cause		**Possible Solution**
Power supply to encoder is wired incorrectly.		Correct the wiring.
PG-F3 power supply circuit is damaged.		Replace the option.
Keypad Display		**Fault Name**
oS	oS	Overspeed
		The motor speed feedback exceeded the F1-08 setting.
Cause		**Possible Solution**
Overshoot is occurring.		• Increase the settings for C5-01 (Speed Control Proportional Gain 1) and reduce C5-02 (Speed Control Integral Time 1). • Adjust the input signal using parameters H6-02 through H6-05. • Enable Feed Forward Control and perform Inertia Auto-Tuning in CLV.
Incorrect speed feedback scaling when terminal RP is used as speed feedback input in V/f control.		Set H6-02 to the value of the speed feedback signal frequency when the motor runs at the maximum speed.
Inappropriate parameter settings.		Check the setting for the overspeed detection level and the overspeed detection time (F1-08 and F1-09).
Keypad Display		**Fault Name**
PGo	PGo	PG Encoder Disconnected
		The drive has not received a PG encoder pulse for longer than the time set in F1-14.
Cause		**Possible Solution**
The encoder is disconnected or is not wired properly.		Make sure the encoder is properly wired or is not disconnected.
The encoder does not have enough power.		Confirm that the correct power supply is properly connected to the PG encoder.
Motor brake is engaged.		Correct the brake control sequence and verify that the brake has been released.
Keypad Display		**Fault Name**
PGoH	PGoH	PG Encoder Hardware Fault
		PG encoder cable is disconnected.
Cause		**Possible Solution**
Encoder cable is disconnected.		Reconnect the cable.

Table 14 Operation Error Displays, Causes, and Possible Solutions

Keypad Display		Fault Name
oPE02	oPE02	Parameter Range Setting Error
		Use U1-18 to find parameters set outside range.
Cause		**Possible Solution**
Parameters were set outside the possible range.		Set parameters to the proper values. **Note:** When multiple errors occur simultaneously, other errors are given precedence over oPE02.
Keypad Display		**Fault Name**
oPE06	oPE06	Control Method Selection Error
		Correct the setting for the control method.
Cause		**Possible Solution**
Control method requires installing a PG option, but no PG option is installed (A1-02 = 1, 3, or 7).		• Connect a PG option. • Correct the value set to A1-02.

◆ Preventing Electrical Interference

Take the following steps to prevent erroneous operation caused by noise interference:

1. Use shielded wire for the PG encoder signal lines.
2. Use PG encoder signal cables that are shorter than 20 m (65 ft).
3. When using EnDat, the signal “Sensor Up” must be connected to terminal IP on the PG-F3 option for cables longer than 10 m. Additionally, the “Sensor 0 V” must be connected to terminal IG.
4. Separate option control wiring from main circuit input power wiring and motor output power cables using conduit or cable tray dividers.
5. Ground the shield of the cable on the PG encoder side and the drive side.
6. Verify that the shield is properly grounded and ground one end of the signal line or remove the ground connection on both ends if electrical interference problems arise in the PG encoder signal.

■ Interface Circuit

EnDat 2.1/01, EnDat 2.2/01

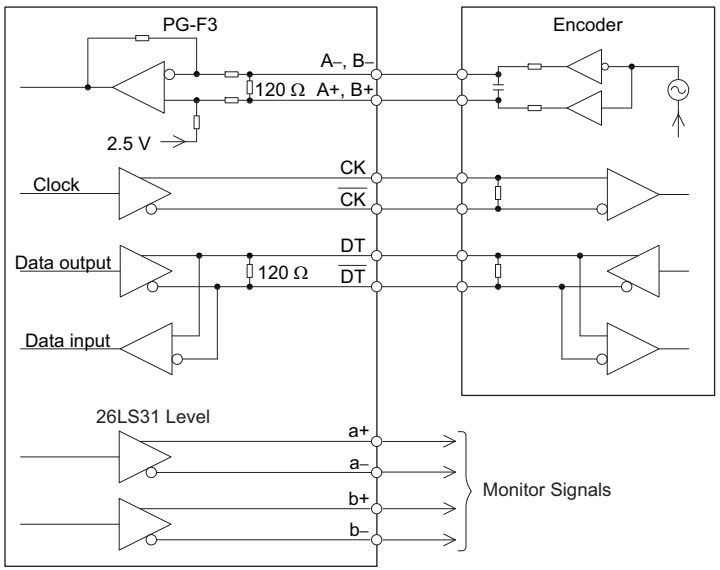

Figure 22 Interface Circuit (EnDat 2.1/01, EnDat 2.2/01)

EnDat 2.2/22

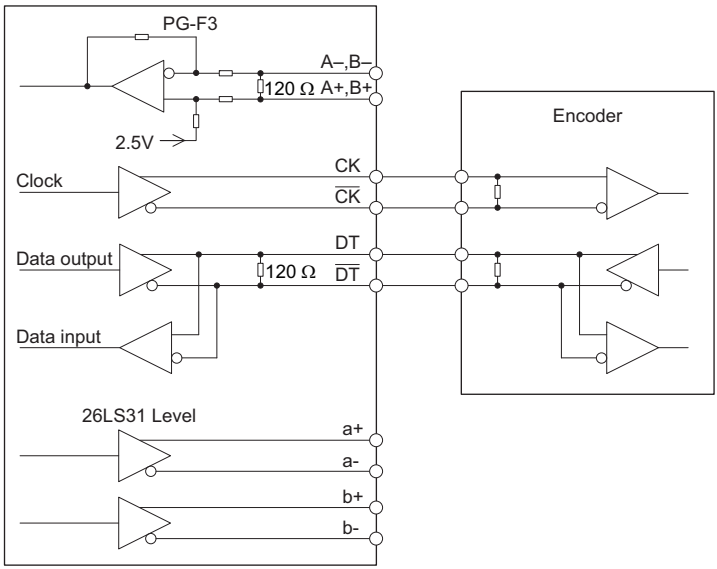

Figure 23 Interface Circuit (EnDat 2.2/22)

HIPERFACE

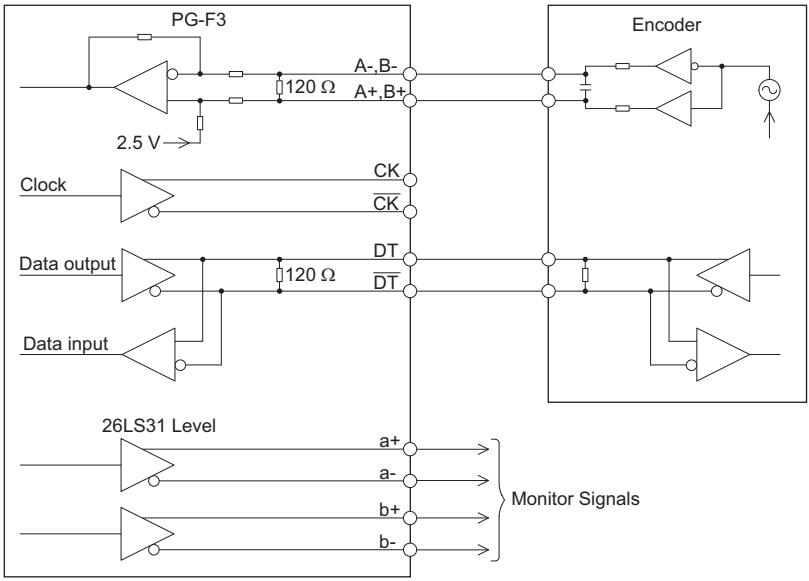

Figure 24 Interface Circuit (HIPERFACE)

8 European Standards



Figure 25 CE Mark

The CE mark indicates compliance with European safety and environmental regulations. It is required for engaging in business and commerce in Europe.

European standards include the Machinery Directive for machine manufacturers, the Low Voltage Directive for electronics manufacturers, and the EMC Directive for controlling noise.

This option displays the CE mark based on the EMC Directive: 2014/30/EU.

Drives used in combination with this option and devices used in combination with the drive must also be CE certified and display the CE mark. When using drives displaying the CE mark in combination with other devices, it is ultimately the responsibility of the user to ensure compliance with CE standards. Verify that conditions meet European standards after setting up the device.

◆ EMC Directive Compliance

This option is tested according to European standards EN 61800-3 and complies with EMC Directive. The CE marking is declared based on the harmonized standards.

■ EMC Directive Installation Conditions

Verify the following installation conditions to ensure that other devices and machinery used in combination with this option also comply with EMC Directive:

1. Use dedicated shield cable for the option and external device (encoder, I/O device, master), or run the wiring through a metal conduit.
2. Keep wiring as short as possible and ground the largest possible surface area of the shield to the metal panel according to ***Figure 27***.

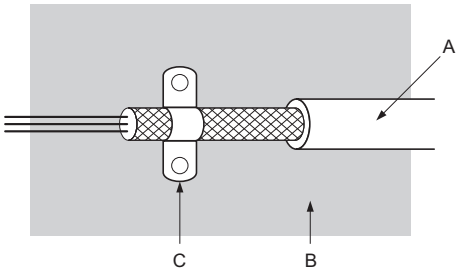

A – Braided shield cable
B – Metal panel
C – Cable clamp (conductive)

Figure 26 Ground Area

■ Option Installation for CE Compliance: Models PG-□□,DI-□□,DO-□□, AI-□□,AO-,SI-□□

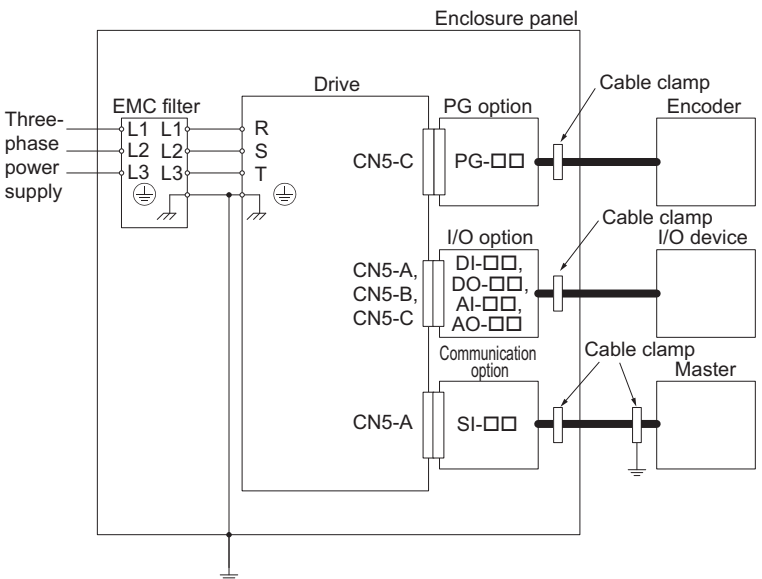

Figure 27 Option Installation for CE Compliance

9 United Kingdom Conformity Assessed Marking



Figure 28 UKCA Mark

The UKCA mark indicates compliance with United Kingdom safety and environmental regulations.

It is required for engaging in business and commerce in the United Kingdom.

United Kingdom standards include the Supply of Machinery (Safety) Regulations (Machinery) for machine manufacturers, the Electrical Equipment (Safety) Regulations (Low voltage) for electronics manufacturers, and the Electromagnetic Compatibility Regulations (EMC) for controlling noise.

This product displays the UKCA mark in accordance with the EMC.

Table 15 Designated Standards

Statutory Instruments	Designated Standards
Electromagnetic Compatibility Regulations S.I. 2016 No. 1091	EN 61800-3 <1>
Restriction of the Use of Certain Hazardous Substances in Electrical and Electronic Equipment Regulations S.I. 2012 No. 3032	EN IEC 63000 <1>

<1> Refer to the "UK Declaration of Conformity" for the year of the Designated Standards.

When using drives displaying the UKCA mark in combination with other devices, it is ultimately the responsibility of the user to ensure compliance with UKCA standards. Verify that conditions meet applicable United Kingdom standards after setting up the device.

10 Korean Radio Waves Act



Figure 29 KC Mark

This product confirms to broadcast and communications equipment for business use (Class A) and are designed for use in locations other than in ordinary houses. Products that bear the Korea Certification (KC) mark conform to the Korean Radio Waves Act.

Be careful when you use the product in Korea under the following conditions.

Table 16 Precautions when Using This Product

Precautions
This equipment is evaluated for compatibility for use in a business environment and may cause radio interference in a domestic environment.

Note: The user guide applies only to “Business Broadcasting Communication Equipment”. Comply with the EMC Directive to conform to the Korean Radio Act.

11 Specifications

Table 17 Option Specifications

Items	Specifications
Model	PG-F3
Compatible Encoder Types	EnDat 2.1/01, EnDat 2.2/01, EnDat 2.2/22 (HEIDENHAIN) ECN1313 (EnDat 2.1/01, EnDat 2.2/01) ECN113 (EnDat 2.1/01, EnDat 2.2/01) ECN413 (EnDat 2.1/01, EnDat 2.2/01) ECN1325 (EnDat 2.2/22) ECN125 (EnDat 2.2/22) ECN425 (EnDat 2.2/22) HIPERFACE (SICK STEGMANN) SRS50/60 SKS36 SFS60
Multi-turn	Not available
Encoder Wiring Length	20 m（65 ft） maximum. Wiring length over 10 m (32 ft) for EnDat requires two connections to both IP and IG.
Encoder Power Supply	Output voltage: 5 V ± 5%, 8 V ± 10% Maximum Output Current: 330 mA (5 V), 150 mA (8 V)
Compatible Control Modes	CLV/PM
Maximum Input Frequency	20 kHz (no maximum input frequency for EnDat 2.2/22)
Pulse Monitor Output	Monitor for A and B phase output Matches RS-422 Level **Note:** Not available when using EnDat 2.2/22.
Encoder Disconnect Detection	Software detection
Ambient Temperature	-10°C to 50°C (14°F to 122°F)
Humidity	95% RH or lower with no condensation
Storage Temperature	-20°C to 60°C (-4°F to 140°F) allowed for short-term transport of the product
Area of Use	Indoors and free from: • Oil mist, corrosive gas, flammable gas, and dust • Radioactive materials or flammable materials, including wood • Harmful gas or fluids • Salt • Direct sunlight • Falling foreign objects
Altitude	1000 m (3280 ft) or lower

12 Disposal

◆ Disposal Instructions

Correctly dispose of this product and packing material as specified by applicable regional, local, and municipal laws and regulations.

◆ WEEE Directive



Figure 30 WEEE Mark

The wheelie bin symbol on this product, its manual, or its packaging identifies that you must recycle it at the end of its product life.

You must discard the product at an applicable collection point for electrical and electronic equipment (EEE).

Do not discard the product with usual waste.

◆ Revision History

Revision dates and manual numbers appear on the bottom of the back cover.

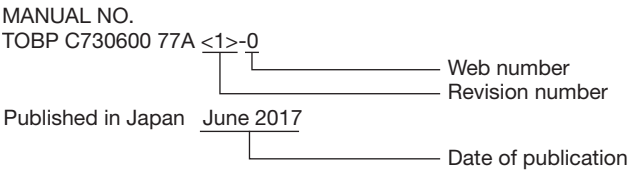

Date of Publication	Rev. No	Web No.	Section	Revised Content
January 2025	<6>	0	–	Address in Japanese version.
September 2023	<5>	0	All	Addition: Information on LA700 Revision: Reviewed and corrected entire documentation.
			Chapter 9	Addition: United Kingdom Conformity Assessed marking
			Chapter 10	Addition: Korean Radio Waves Act
			Chapter 12	Addition: Disposal
			Back cover	Revision: Address
December 2020	<4>	0	–	Address in Japanese version.
March 2020	<3>	0	Back cover	Revision: Address
September 2018	<2>	0	All	Addition: Information on GA800 Revision: Reviewed and corrected entire documentation.
			Back cover	Revision: Address
June 2017	<1>	0	Back cover	Revision: Address
April 2016	–	–	–	First edition

YASKAWA AC Drive Option

Motor Encoder Feedback (EnDat, HIPERFACE) Interface

Installation Manual

DRIVE CENTER (INVERTER PLANT)
2-13-1, Nishimiyaichi, Yukuhashi, Fukuoka, 824-8511, Japan
Phone: +81-930-25-2548 Fax: +81-930-25-3431
www.yaskawa.co.jp

YASKAWA ELECTRIC CORPORATION
New Pier Takeshiba South Tower, 1-16-1, Kaigan, Minatoku, Tokyo, 105-6891, Japan
Phone: +81-3-5402-4502 Fax: +81-3-5402-4580
www.yaskawa.co.jp

YASKAWA AMERICA, INC.
2121, Norman Drive South, Waukegan, IL 60085, U.S.A.
Phone: +1-800-YASKAWA (927-5292) or +1-847-887-7000 Fax: +1-847-887-7310
www.yaskawa.com

YASKAWA ELÉTRICO DO BRASIL LTDA.
777, Avenida Piraporinha, Diadema, São Paulo, 09950-000, Brasil
Phone: +55-11-3585-1100 Fax: +55-11-3585-1187
www.yaskawa.com.br

YASKAWA EUROPE GmbH
Philipp-Reis-Str. 6, 65795 Hattersheim am Main, Germany
Phone: +49-6196-569-300 Fax: +49-6196-569-398
www.yaskawa.eu.com E-mail: info@yaskawa.eu.com

YASKAWA ELECTRIC KOREA CORPORATION
6F, 112, LS-ro, Dongan-gu, Anyang-si, Gyeonggi-do, Korea
Phone: +82-31-8015-4224 Fax: +82-31-8015-5034
www.yaskawa.co.kr

YASKAWA ASIA PACIFIC PTE. LTD.
30A, Kallang Place, #06-01, 339213, Singapore
Phone: +65-6282-3003 Fax: +65-6289-3003
www.yaskawa.com.sg

YASKAWA ELECTRIC (THAILAND) CO., LTD.
59, 1F-5F, Flourish Building, Soi Ratchadapisek 18, Ratchadapisek Road, Huaykwang, Bangkok, 10310, Thailand
Phone: +66-2-017-0099 Fax: +66-2-017-0799
www.yaskawa.co.th

YASKAWA ELECTRIC (CHINA) CO., LTD.
22F, Link Square 1, No.222, Hubin Road, Shanghai, 200021, China
Phone: +86-21-5385-2200 Fax: +86-21-5385-3299
www.yaskawa.com.cn

YASKAWA ELECTRIC (CHINA) CO., LTD. BEIJING OFFICE
Room 1011, Tower W3 Oriental Plaza, No. 1, East Chang An Avenue,
Dong Cheng District, Beijing, 100738, China
Phone: +86-10-8518-4086 Fax: +86-10-8518-4082

YASKAWA ELECTRIC TAIWAN CORPORATION
12F, No. 207, Section 3, Beishin Road, Shindian District, New Taipei City 23143, Taiwan
Phone: +886-2-8913-1333 Fax: +886-2-8913-1513 or +886-2-8913-1519
www.yaskawa.com.tw

YASKAWA INDIA PRIVATE LIMITED
#17/A, Electronics City, Hosur Road, Bengaluru, 560 100 (Karnataka), India
Phone: +91-80-4244-1900 Fax: +91-80-4244-1901
www.yaskawaindia.in

YASKAWA

YASKAWA ELECTRIC CORPORATION

In the event that the end user of this product is to be the military and said product is to be employed in any weapons systems or the manufacture thereof, the export will fall under the relevant regulations as stipulated in the Foreign Exchange and Foreign Trade Regulations. Therefore, be sure to follow all procedures and submit all relevant documentation according to any and all rules, regulations and laws that may apply.

Specifications are subject to change without notice for ongoing product modifications and improvements.

© 2016 YASKAWA ELECTRIC CORPORATION

MANUAL NO.
TOBP C730600 77C <6>-0

Published in Japan January 2025
23-2-25
Original instructions