Datasheet Series TRL

Höcherl & Hackl
The electronic load

Model	TRL1040	
Order no.	29-002-000-01	



Basic operating modes	CC, CV, CR, CP
Standard interfaces	RS-232, USB, LAN, CAN
Max. input voltage Vmax	400 V
Min. input voltage Vmin [1)]	4 V
Max. load current Imax	15 A
Continuous power	1000 W
Short-time power	1000 W
Voltage setting	0 ... 400 V
Current setting	0 ... 15 A
Resistance setting	0.267 Ohm ... 268 Ohm
Power setting	0 ... 1000 W
Rise and fall time fast / medium / slow [2)]	10 / 50 / 250 ms
Mains	1/N/PE AC 230 V 50 Hz
Power consumption [3)]	85 VA
Max. feed-in power	920 VA
Max. efficiency	90 %
Noise max. ca. [4)]	49 dB(A)
Load terminals [5)]	SBU4-24
Weight ca.	7.2 kg
Housing [6)]	1/2 19", 2 U
Width x Height x Depth	219 x 101 x 465 mm

1. Minimum input voltage for maximum static load current.
2. Rise and fall times are defined of 10 ... 90 % and 90 ... 10 % of the maximum current at 10 % of the maximum input voltage (CC mode, tolerance ±20 %). Times will vary at different settings.
3. Power consumption in idle operation (without load current)
4. Measured at the front in distance of 1 m
5. Load and sense terminals both at front and rear panel.
   FKL15/4-SM6: Flat copper bars 15 x 4 mm horizontal with hole for screw M6
   SBU4-24: Safety sockets touch-protected for 4 mm laboratory jacks, max. 24 A
6. Largest width and depth without wiring. 1 U = 44.45 mm.

Subject to modifications without notice, errors and omissions expected

Operating modes, functions	
Basic operating modes	CC, CP, CR, CV
Combined operating modes	CC+CV, CR+CC+CV, CP+CC+CV, CV+CC
Functions	DC load MPP Tracking for solar panel test energy storage device test internal resistance measurement List function rectangular function (in local operation also in PWM mode) modulation (sine, triangle, square) data acquisition (internally or to USB flash drive) save and recall of device settings watchdog in remote operation master-slave mode for power extension
User interface	4.3" TFT touch display

Accuracy of setting		
	of setting	**of corresponding range**
Voltage	±0.2 %	±0.05 %
Current	±0.5 %	±0.05 %
Resistance (at 5 % to 100 % of voltage range)	±1.4 %	±0.3 % of current range ±0.5 % of resistance range
Power (at V and I > 10 % of range) (at V or I 5 ... 10% of range)	±0.35 % ±0.7 %	±0.1 % ±0.25 %
Resolution	14 bits	

Accuracy of adjustable protections		
	of setting	**of corresponding range**
Overcurrent protection	±1 %	±0.3 %
Undervoltage protection	±1 %	±0.3 %
Resolution	12 bits	

Accuracy of measurement slow		
	of measured value (real value)	**of corresponding range**
Voltage	±0.01 %	±0.025 %
Current	±0.2 %	±0.05 %
Resistance	is calculated from current and voltage	
Power	is calculated from current and voltage	
Resolution	23 bits	
Sampling time	250 ms, not triggerable	

Accuracy of display	
Number of decimal places	4
Accuracy	accuracy of measurement slow ±1 digit of the display value

Accuracy of measurement fast		
	of measured value (real value)	**of corresponding range**
Voltage	±0.1 %	±0.1 %
Current	±0.7 %	±0.1 %
Resistance	is calculated from current and voltage	
Power	is calculated from current and voltage	
Resolution	16 bits	
Sampling time	200 µs ... 1,000 s, resolution 200 µs	

Accuracy of trigger voltage and current	
Trigger voltage	±1 % of voltage range
Trigger current	±1 % of current range
Sampling time	200 µs

Dynamic function LIST	
Operating modes	CC, CV, CR, CP
No. of load levels	max. 300, with corresponding ramp and dwell times
Accuracy of load levels	see accuracy of setting
Dwell time [1]	200 µs ... 1,000 s
Ramp time [1]	0 ... 1,000 s
Resolution	200 µs
Accuracy of setting times	±0.02 %
Sampling time	see accuracy of measurement fast
Delay at triggered start	max. 300 µs

Dynamic function rectangular	
Operating modes	CC, CV
No. of load levels	2
Accuracy of load levels	see accuracy of setting
Pulse times [1], resolution	1 µs ... 9999.999 ms, resolution 1 µs
Accuracy of setting times	0.02 %

Dynamic function PWM	
Operating modes	CC, CV, CR
No. of load levels	2
Accuracy of load levels	see accuracy of setting
Frequency [1], resol.	0.1 Hz ... 10 kHz, resolution 0.1 Hz
Duty cycle, resol.	1 ... 99 %, resolution 1 %

Dynamic function modulation	
Operating modes	CC, CV
Waveforms	sine, square, triangle
Frequency [1], resol.	0.1 Hz ... 10 kHz, resolution 0.1 Hz
Modulation depth	0 ... 100 %

Data acquisition	
to external USB flash drive	
Sampling time	0.1 ... 30.0 s, resolution 0.1 s
Measurement data	timestamp, voltage, current
No. of measurement points	limited by flash drive memory capacity
File format	.csv
to internal memory	
Sampling time	200 µs ... 1,000 s, resolution 200 µs, synchronized with dynamic function
Measurement data	timestamp, voltage, current
No. of measurement points	max. 40,000 in ring buffer

Settings memory	
No. of memory positions	9, selectable (incl. programmed list) 1 for last device settings at power-off or power failure

I/O port (option TRL06): inputs and outputs	
Inputs	analog load setting I and V 0 ... 5 V and 0 ... 10 V analog protection setting I and V 0 ... 5 V and 0 ... 10 V load input activation (low active) operating mode selection CC/CV control speed selection fast/slow remote shut-down (high active) readable digital input (by SCPI command) trigger input (positive/negative/either edge) control input (activates I/O port, low active)
Dig. input levels	logical low: 0 ... 0.8 V, logical high: 3 ... 30 V

The specified accuracies refer to an ambient temperature of 23 ±5 °C. The specified accuracies are valid when the sense lines are connected and when the unit is connected to undisturbed voltages (ripple and noise < 0.1 %). At voltages with higher disturbance values the accuracy can change for the worse.

1. The applicable time or frequency range is limited by the rise/fall time of the respective model.

Technical Data

Outputs	analog voltage monitor output 0 ... 10 V analog current monitor output 0 ... 10 V load input activation state (low active) overload status (OV, OCP, OPP, OTP, low active) programmable logic output (by SCPI command) trigger output (low active)
Dig. output levels	logical low: 0 ... 0.8 V logical high: 5 V/24 V selectable, max. 10 mA (push-pull)

I/O port (option TRL06): accuracy of analog control 0 ... 5 V or 0 ... 10 V		
	of setting	of corresponding range
Voltage	±0.2 %	±0.05 %
Current	±0.2 %	±0.05 %
Overcurrent protection [1]	±1 %	±0.3 %
Undervoltage protection [1]	±1 %	±0.3 %
	input resistance of analog inputs >10 kΩ	

I/O port (option TRL06): accuracy of analog monitor outputs 0 ... 10 V		
	of analog signal of actual value	offset voltage
Voltage	±0.2 %	±15 mV
Current	±0.2 %	±15 mV
	permissible load > 2 kΩ	

I/O port (option TRL06): permissible voltages	
Vin-io (GND - neg. load input)	max. 800 V [2]
VioPE (GND - PE)	max. 50 V [2]

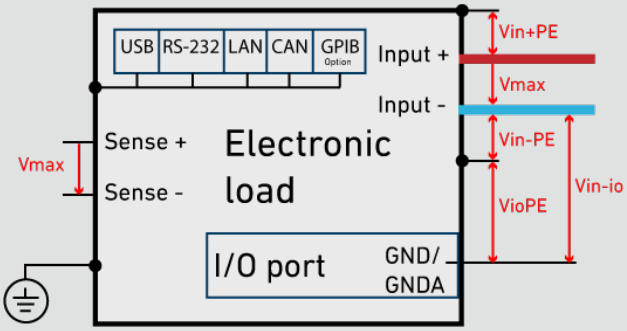

Input	
Input resistance	>50 kΩ when load input is off diode function at reverse polarity up to nominal current
Input capacity	see model overview
Parallel operation	up to 5 devices in master-slave operation
Max. input voltage Vmax	see model overview
Min. input voltage Vmin	see model overview
Input: permissible voltages	
Vin-PE (neg. load input - PE)	max. 800 V [2]
Vin+PE (pos. load input - PE)	TRL10K12: Vmax + max. 500 V [2] all others: Vmax + max. 800 V [2]
Power	
Continuous power	see model overview (at Ta = 21 °C)
Derating	-1.2 %/°C for Ta > 21 °C
Effectivity	see model overview
Protection and monitoring	
Protective devices	overcurrent overpower overtemperature
Monitoring	overvoltage indication reverse polarity indication undervoltage indication (if the input voltage is too low for the set current)

Terminals	
Load input	see model overview
Sense	SBU4-24
Operating conditions	
Operating temperature	5 ... 40 °C
Stock temperature	-25 ... 65 °C
Max. operating height	2,000 m above sea level
Pollution degree	2
Overvoltage category of mains	II
Max. humidity	80 % at 31 °C, linear decreasing to 50 % at 40 °C
Min. distance rear panel to wall or other objects	20 cm
Cooling	2-stage air cooling
Noise, weight	see model overview
Mains voltage	see model overview
Mains fuse	see specification on the rear panel near mains fuse
Mains cable	length max. 3 m cross-section of mains leads min. 1 mm²
Own consumption	see model overview
Maximum feed-in power	see model overview

Housing	
Dimensions	see model overview
Color front rear top	 RAL7035 (light grey) stainless steel RAL7037 (dusty grey)
Safety and EMC	
Protection class	1
Measuring category	O (CAT I according to EN 61010:2004)
Electrical safety	EN 61010-1:2010+A1:2019+A1:2019/AC:2019 EN IEC 61010-2-030:2021+A1:2021
EMC	EN 61326-1:2013 EN 55011:2016+A1:2017 EN 61000-3-2:2014 EN 61000-3-3:2013
Standard interfaces	
Data interfaces	RS-232, USB, LAN, CAN
I/O port	none
Available options	
Data interfaces TRL02	GPIB
Mechanical options TRL10 TRL11	19" installation kit for 1 device with ½ 19", 2 U 19" installation kit for 2 devices with ½ 19", 2 U
TRL08	additional safety cover for load input incl. cap for unused load terminals
Hardware extensions TRL06	galvanically isolated I/O port
Calibration, warranty	
FCC-TRLxx	Factory Calibration Certificate, twice for free [3]
Recommended calibration interval	2 years
Warranty	2 years

Technical data of production series A, rev. 3. Subject to technical changes without notice.

1. Only 0 ... 10 V
2. Positive/negative DC voltage or RMS value of a sinusoidal AC voltage
3. The second calibration is free of charge if the particular device has been registered with H&H: www.hoecherl-hackl.com/service/device-registration