PC-1860BS

CEILING MOUNT FIREDOME SPEAKER 5INCH 6W



The ceiling speakers of the PC-series are suitable for announcements and BGM system use in high quality. The speaker's design harmonizes with modern architecture and decor. The PC-1860BS is equipped with a fire dome to protect it from fire and to prevent fire from spreading through the ceiling. Thus, the speaker is designed according to British Standard BS 5839-8: 2008 and EN54-24.

Key features

- Flat front panel
- Quick and easy installation
- Fire dome made of steel
- Ceramic screw terminal block and thermal fuse
- 6 W rated input
- 12 cm speaker

Specifications

Rated Input	6 W (100 V line), 3 W (70 V line)
Rated Impedance	100 V line: 1.7 kΩ (6 W), 3.3 kΩ (3 W), 6.7 kΩ (1.5 W), 13 kΩ (0.8 W) 70 V line: 1.7 kΩ (3 W), 3.3 kΩ (1.5 W), 6.7 kΩ (0.8 W), 13 kΩ (0.4 W)
Sensitivity	95 dB (1 W, 1 m) (500 Hz - 5 kHz, pink noise) 93 dB (1 W, 1 m) (100 Hz - 10 kHz, pink noise) 81 dB (1 W, 4 m) (100 Hz - 10 kHz, pink noise)
Maximum Sound Pressure Level	100 dB (6 W, 1 m) (100 Hz - 10 kHz, pink noise) 88 dB (6 W, 4 m) (100 Hz - 10 kHz, pink noise)
Frequency Response	170 Hz - 20 kHz (peak -20 dB)
Coverage Angle	Horizontal and Vertical: 165° (500 Hz), 175° (1 kHz), 165° (2 kHz), 70° (4 kHz) according to EN 54-24
Environmental Type	A (indoor applications)
Speaker Component	12 cm (5") cone-type
Mounting Hole	Mounting hole: Ø156±3 mm (6.14"±0.12") Ceiling thickness: 5 - 25 mm (0.2" - 0.98")
Speaker Mounting Method	Spring catch
Cable Requirements	Solid wire: 0.8 - 6 mm² (AWG 18 - 10)
Connection	2-Steatite connector (3 pole)
Operating Temperature	-10 °C to +50 °C (14 °F to 122 °F)
Finish	Frame: Steel plate, white (RAL 9016 equivalent), paint Grille: Steel net, white (RAL 9016 equivalent), paint Fire dome: Steel plate, black, paint
Dimensions	Ø180 x 5 (exposed section) + 100 (D) mm (7.09" x 0.2" + 3.94")
Weight	1.1 kg (2.43 lb)
Included Accessories	Rubber grommet …2, Paper pattern …1

Dimensions

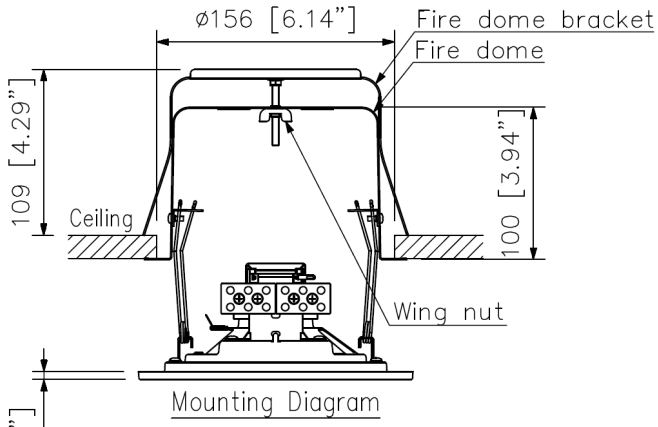

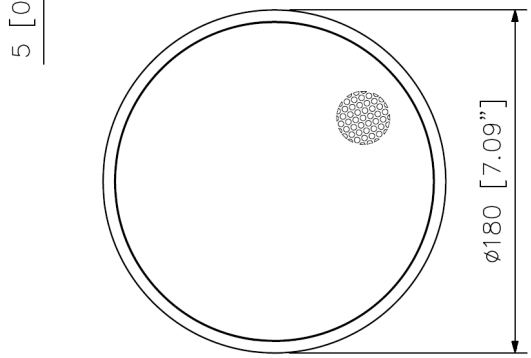

UNIT: mm

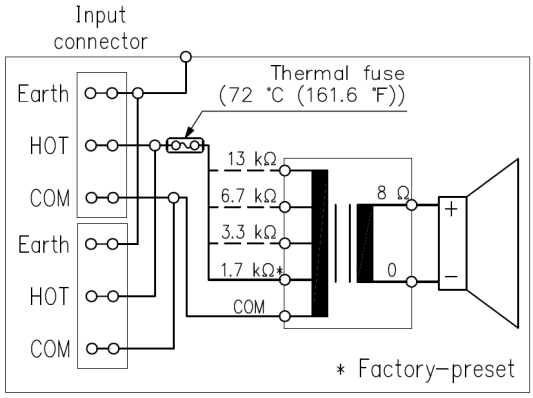

Note: Use transformer terminals when changing input impedance.

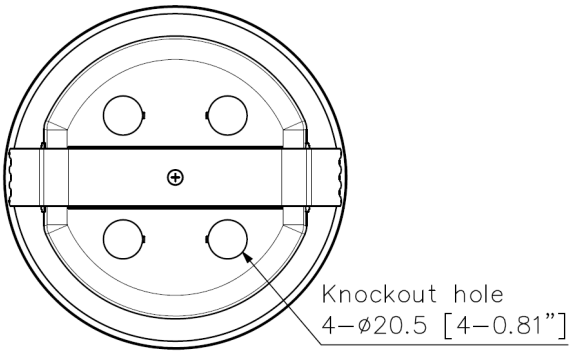

A&E specifications

The loudspeaker shall be of in-ceiling type design and shall consist of two parts, comprising of an inner mesh grille and chassis with an integral loudspeaker with no visible fixings and a discreet outer bezel of only 5 mm. The second part shall be a steel constructed fire dome for the prevention of smoke or fire spreading through ceiling voids in an emergency situation.
Installation shall be via a separate spring catch latching mechanism allowing it to be mounted in a ceiling with a thickness of between 5 – 25 mm (0.2" – 0.98").
A template shall be provided to assist in cutting mounting holes. The loudspeaker shall incorporate a single 12 cm (5”) full range cone-type transducer with a smooth frequency response of 170 Hz to 20 kHz with a wide-angle dispersion. The loudspeaker shall produce a Sound Pressure Level (SPL) of 95 dB (measured between 500 Hz – 5 kHz of pink noise) on axis at 1 meter with a power input of 1 watt and 81dB (measured between 100Hz – 10kHz of pink noise) on axis at 4 meters with a power input of 1 watt. The loudspeaker shall be capable of producing 6 watts (for 100 V Line) and 3 watts (for 70 V Line) of power.
The loudspeaker shall be fitted with a factory mounted transformer with easy selectable power tappings of 6 W, 3 W, 1.5 W and 0.8 W when using 100 V Line and 3 W, 1.5 W, 0.8 W and 0.4 W when using 70 V Line. Push-in-type connectors shall make cable connection quick and easy and shall allow bridge connection when necessary.
The ceiling mount loudspeaker shall incorporate suitable anchoring points, as an additional precautionary measure, allowing an attachment of a safety wire to avoid displacement. The dimensions shall be Ø180 × 100 mm (d) (7.09" x 3.94") weighing 1.1 kg (2.43 lb.) The finish of the loudspeaker shall be: Baffle: steel plate, white (RAL 9016 equivalent). Grille: Steel net, white (RAL 9016 equivalent). Mounting bracket: steel plate.
The ceiling mount loudspeaker shall be certified according to the following standards: European Standard EN 54-24: 2008, International Standard ISO 7240-24: 2010 and shall comply with British Standard BS-5839-8: 2008.
Manufacturer: TOA Corporation
Model: PC-1860BS