50µH Line Impedance Stabilisation Network

1 Introduction

The TBL5016-1 50µH LISN is a device required to setup conducted noise measurements of DC or AC-powered electronic equipment. It is designed according to CISPR 16-1-2 and MIL-STD-461F standard and characterized in the frequency range of 9kHz to 100 MHz.
Apart from carrying out conducted noise measurements, LISNs are also used to establish a defined impedance for various other standardized tests.
The LISN is a 50Ω/50µH+5 Ω single line design with a high current jumper to short the 5 Ohm resistor and configure it as 50Ω/50µH LISN according to CISPR 16-1-2. The LISN is characterized up to 100 MHz which means that the LISN can be used for the combined range of 9 kHz to 100 MHz.
The LISN is inserted into the supply line of the DUT (Device Under Test). Conducted noise, which is present at the supply terminals of the DUT can be measured at the BNC connector using a spectrum analyzer or a measurement receiver. The source (supply) terminal and the DUT terminal are decoupled by a 50µH inductor.
DC or single phase measurements typically require a pair of TBL5016-1. Combining it with the Tekbox LISN Mate enables separate measurement of common mode and differential mode noise. DUTs with 3 phase supply require three or four pieces of TBL0516-1, depending on whether the product is supplied in delta or star configuration.
The unit comes equipped with a BNC-male to N-male RG232 cable, mating connectors, high current configuration jumpers and ground brackets to attach it to a ground plane.



2 Parameters

LISN type: V-AMN, configurable as 50Ω/50µH+5 Ω or 50Ω/50µH

Frequency range: 9 kHz – 100 MHz

DC Resistance: < 45 mΩ

Maximum current: 16A continuous

Operating voltage range: 0 – 250V DC; 0 - 250V AC (50/60 Hz), 0 – 90V AC (400 Hz)

Fuse: 2 x 16A slow

High current plug/screw terminals - male: Phoenix Contact 1998933, female: Phoenix Contact 1967375

Dimensions: 250 mm x 225 mm x 140 mm (including ground brackets); weight: 2.7 kg

3 Warning

Spectrum Analyzer / Measurement Receiver protection:

The TBL5016-1 LISN does not contain any protective elements in the RF path. Use an external attenuator and/or limiter, if your DUT may produce harmful transients or high RF noise levels, in order to protect the spectrum analyser / measurement receiver input.

Safety:

The LISN housing is connected to the negative / ground SOURCE and DUT pin of the terminal block and the ground of the RF connector. Inadvertently connecting the positive voltage to the ground pin will expose you to the risk of electric shock. The maximum source voltage rating with respect to component ratings is 250V. The maximum source voltage rating with respect to operator safety is 60V.

4 Principle schematic

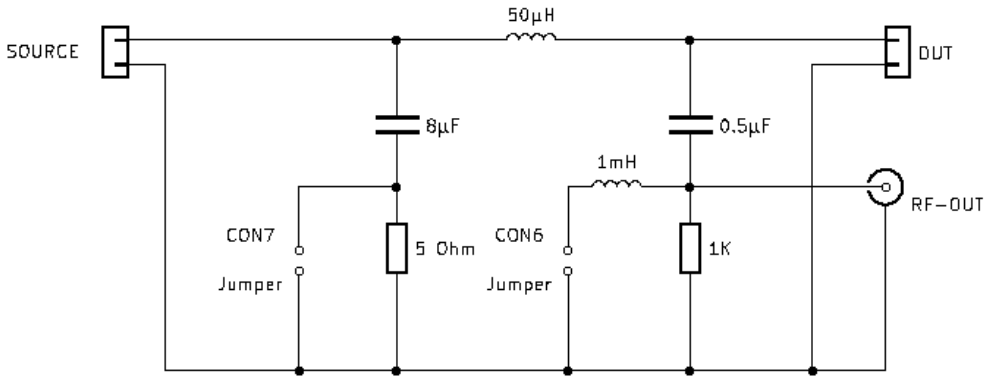

Picture 1: principle schematic

50µH Line Impedance Stabilisation Network

5 Impedance

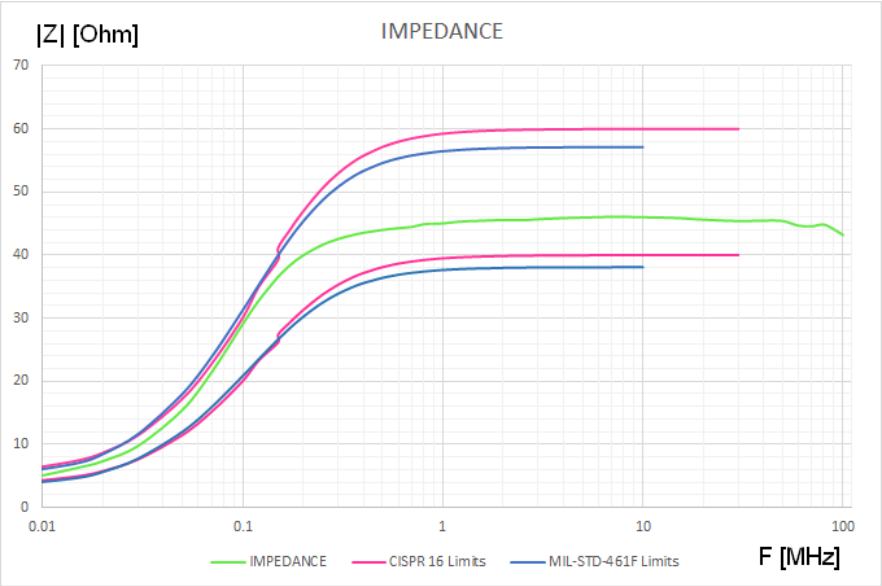

Picture 2: LISN impedance, 50Ω // 50µH + 5Ω

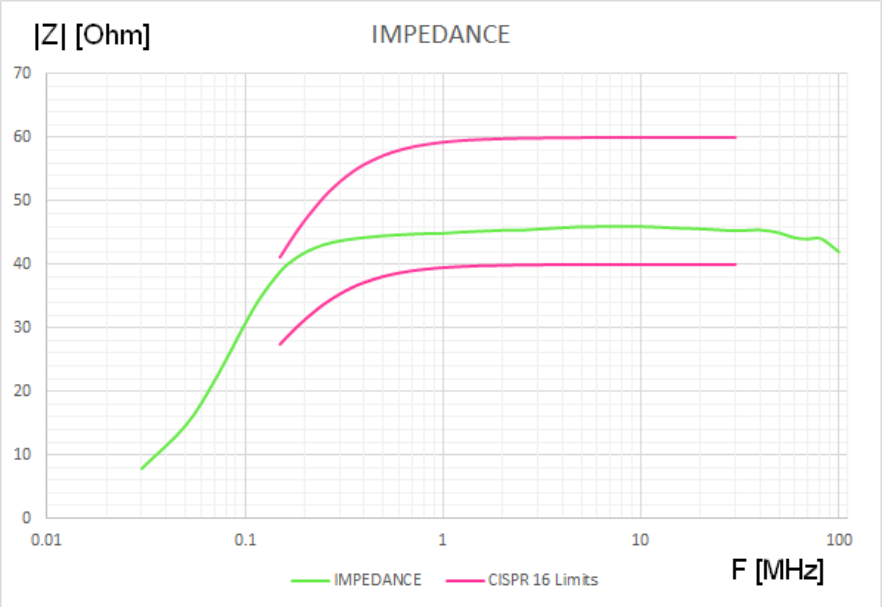

Picture 3: LISN impedance, 50Ω // 50µH

The impedance is referenced to the PCB edge, not including the Phoenix terminal blocks. The male + female terminal block combination can be considered being equivalent to 5cm of additional wiring in the entire set up.

50µH Line Impedance Stabilisation Network

6 Phase

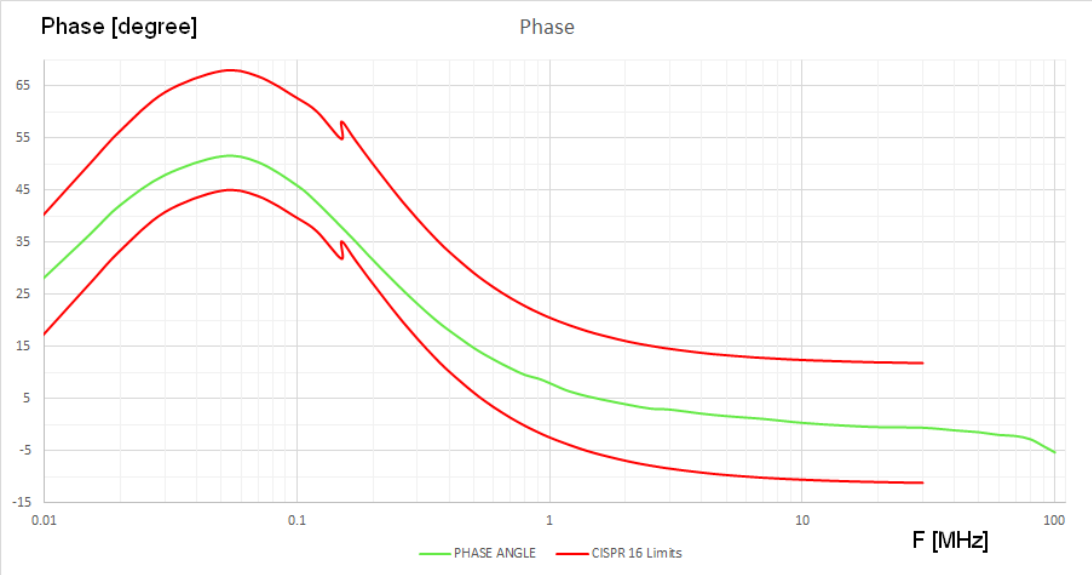

Picture 3: LISN phase, 50Ω // 50µH + 5Ω

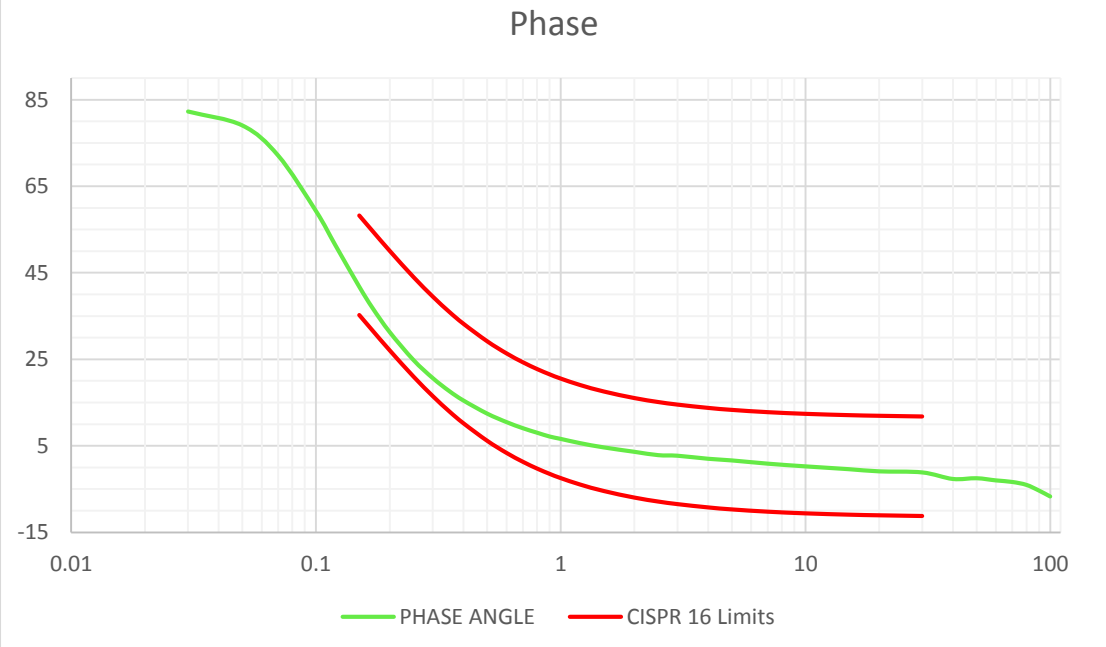

Picture 4: LISN phase, 50Ω // 50µH

The phase is referenced to the PCB edge, not including the Phoenix terminal blocks. The male + female terminal block combination can be considered being equivalent to 5cm of additional wiring in the entire set up.

7 Isolation

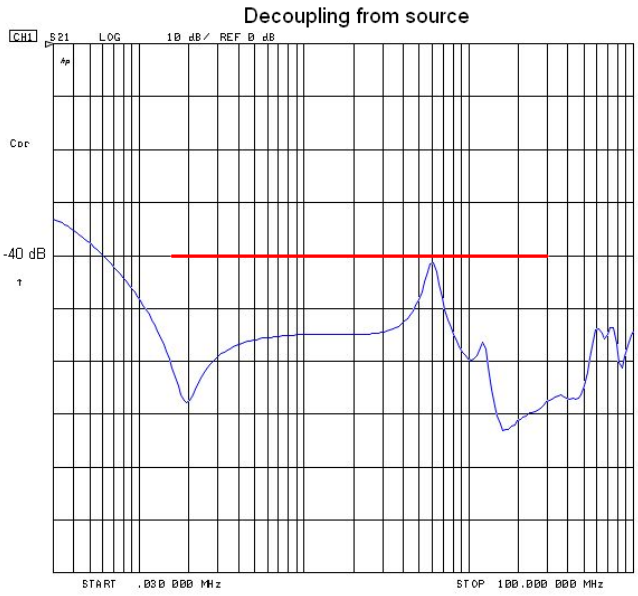

Picture 5: LISN Isolation, Source to RF out, 50Ω // 50µH

The isolation is measured between SOURCE terminal and RF port, with the DUT port terminated with 50 Ohm.

8 Thermal characteristics

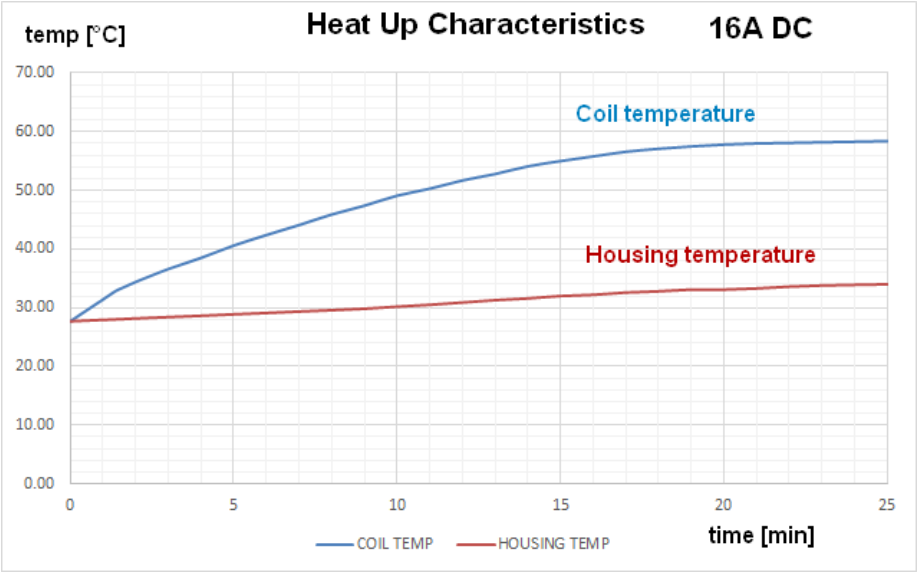

Picture 6: Coil and housing temperature at 16 A DC current

9 Calibration data according to CISPR 16 -1-2 Annex A8

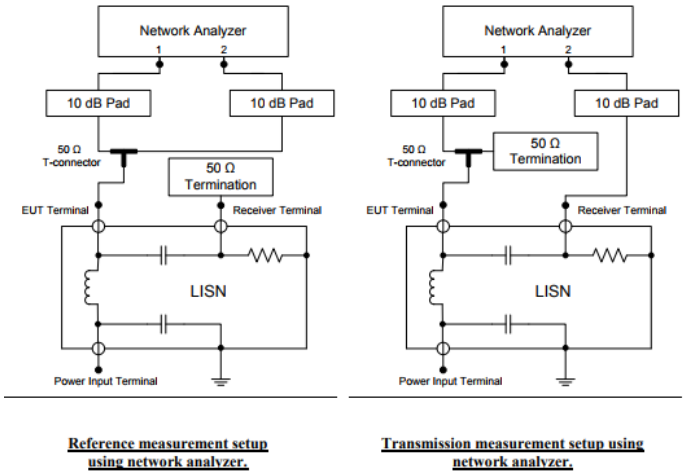

Picture 7: Calibration set up according to CISPR 16-1-2 Annex A.8.

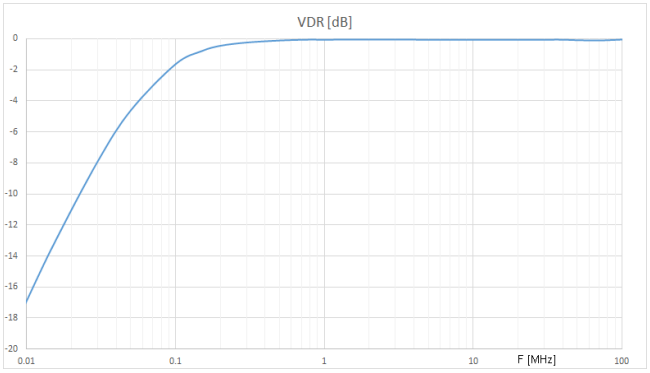

Picture 8: Voltage division ratio DUT terminals to RF connector, 50Ω // 50µH + 5Ω

Frequency [MHz]	Voltage Division Ratio DUT port to RF port [dB]	Frequency [MHz]	Voltage Division Ratio DUT port to RF port[dB]
0.009	-17.8	7	-0.06
0.015	-13.33	10	-0.06
0.03	-7.89	20	-0.06
0.05	-4.61	30	-0.06
0.1	-1.63	40	-0.06
0.15	-0.79	50	-0.09
0.3	-0.45	60	-0.1
0.5	-0.24	70	-0.11
0.75	-0.11	80	-0.09
1	-0.06	90	-0.07
2	-0.06	100	-0.05
5	-0.05		

Table 1 - LISN calibration data, voltage division ratio, 50Ω // 50µH + 5Ω

50µH Line Impedance Stabilisation Network

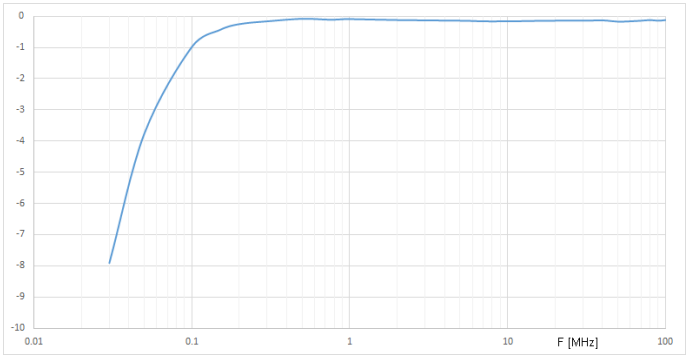

Picture 9: Voltage division ratio DUT terminals to RF connector, 50Ω // 50µH

Frequency [MHz]	Voltage Division Ratio DUT port to RF port [dB]	Frequency [MHz]	Voltage Division Ratio DUT port to RF port[dB]
0.03	-7.91	10	-0.16
0.05	-3.76	20	-0.14
0.1	-0.98	30	-0.14
0.15	-0.44	40	-0.13
0.3	-0.16	50	-0.17
0.5	-0.08	60	-0.16
0.75	-0.11	70	-0.14
1	-0.09	80	-0.12
2	-0.12	90	-0.14
5	-0.14	100	-0.12
7	-0.16		

Table 2 - LISN calibration data, voltage division ratio, 50Ω // 50µH

The voltage division ratio is referenced to the PCB edge, not including the Phoenix terminal blocks. The male + female terminal block combination can be considered being equivalent to 5cm of additional wiring in the entire set up.

10 Transmission loss

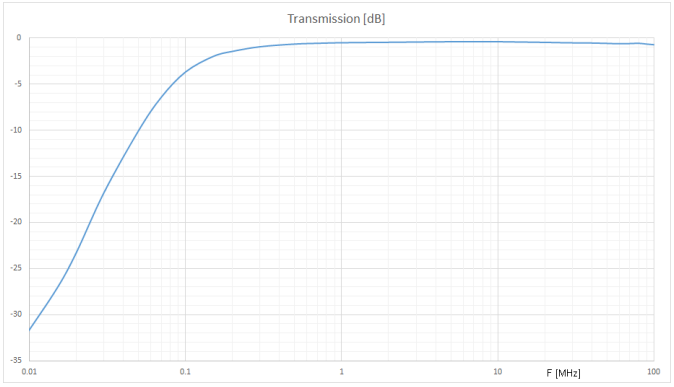

Picture 10: Transmission , DUT terminals to RF connector, 50Ω // 50µH + 5Ω

50µH Line Impedance Stabilisation Network

Frequency [MHz]	Transmission DUT port to RF port [dB]	Frequency [MHz]	Transmission DUT port to RF port[dB]
0.009	-32.76 (-34.89 with LP jumpered)	2	-0.45
0.015	-27.13 (-27.53 with LP jumpered)	5	-0.39
0.02	-23.22	7	-0.39
0.03	-16.75	10	-0.39
0.05	-10.02	20	-0.46
0.07	-6.39	30	-0.51
0.1	-3.66	40	-0.53
0.15	-1.99	50	-0.57
0.2	-1.43	60	-0.61
0.3	-0.93	70	-0.59
0.5	-0.64	80	-0.56
0.7	-0.56	90	-0.64
1	-0.5	100	-0.71
1.5	-0.47		

Table 3 - LISN calibration data, transmission, 50Ω // 50µH + 5Ω

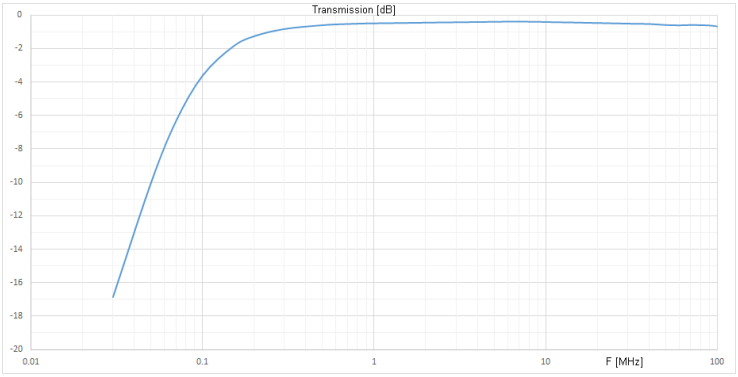

Picture 11: Transmission , DUT terminals to RF connector, 50Ω // 50µH

Frequency [MHz]	Transmission DUT port to RF port [dB]	Frequency [MHz]	Transmission DUT port to RF port[dB]
0.03	-16.86	7	-0.39
0.05	-10.03	10	-0.41
0.07	-6.33	20	-0.47
0.1	-3.61	30	-0.51
0.15	-1.89	40	-0.53
0.2	-1.26	50	-0.59
0.3	-0.83	60	-0.61
0.5	-0.6	70	-0.59
0.7	-0.53	80	-0.6
1	-0.49	90	-0.62
2	-0.47	100	-0.67
5	-0.45		

Table 4 - LISN calibration data, transmission, 50Ω // 50µH

11 Application

The abbreviation LISN stands for Line Impedance Stabilisation Network.

- It is a low pass filter typically placed between a power source and the supply terminals of a device under test (DUT).
- It has a feed-through path to supply the DUT with power
- It provides a well-defined RF-impedance to the DUT
- It couples electrical noise generated by the DUT to a 50 Ω RF port, which can be connected to a spectrum analyser or measurement receiver
- It suppresses electrical noise from the supply side towards the DUT
- It suppresses electrical noise from DUT side towards the supply

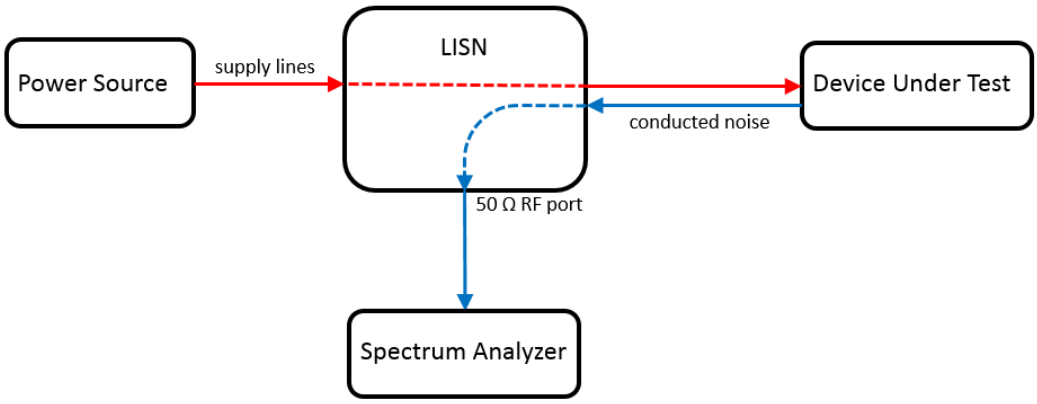

Picture 12: Basic diagram of a conducted emission measurement setup with a LISN

Note that the above basic diagram is simplified. Typically, a standard conformant setup needs two TBL5016-1. One LISN is inserted in the positive supply line and the other LISN is inserted in the negative supply line. Conducted noise measurements have to be carried out on both supply lines. While measuring the noise on one of the supply lines, the RF output of the other LISN must be terminated with 50 Ohm. Similarly, when testing an AC supplied product, one LISN must be inserted in the phase line and the other LISN in the neutral line. Products with 3 phase AC supply can be tested using three (delta configuration) or four (star configuration) TBL5016-1.

11.1 Operation

The TBL0550-1 LISN does not contain a 50 Hz harmonics pre-filter. It contains a high pass at the BNC output, but no transient limiter. Consequently 50 Hz harmonics with high amplitude may appear at the RF output and overdrive or even damage the measurement receiver / spectrum analyser. It is highly recommended to use an external filter/attenuator/transient limiter such as the TBFL1 or similar. External attenuators may also be necessary, depending on the behaviour of the DUT.
50 Hz suppression without low pass jumpered: 57 dB
50 Hz suppression with low pass jumpered: 78 dB

Furthermore, the TBL0550-1 LISN has an 8µF capacitor to ground. In AC applications, the capacitor draws a significant amount of blind current, which would trip the mains ground fault switch. Hence, the TBL0550-1 must be supplied through an isolation transformer.
Though the TBL0550-1 LISN is designed for both AC and DC supplied DUTs, a 50µH LISN with 250µH pre-filter is the better choice when testing AC supplied DUTs in most cases. The TBL0550-1 is primarily targeting conducted noise measurements of DC supplied ISM, Telecom or IT products.
Separate measurement of differential and common mode noise can be carried out using two TBL0550-1 in combination with the Tekbox LISN Mate TBLM1.

12 Ordering Information

Part Number	**Description**
TBL0550-1	50µH LISN, 2 pcs. ground brackets, 2pcs. female terminal blocks Phoenix Contact 1967375, 1 pc. 75 cm BNC-male to N-male RG223 cable, 2pcs jumpers Harwin D3087-98

By default, the LISN is jumpered to 50Ω // 50µH + 5Ω. In order to configure the LISN to 50Ω // 50µH, remove the two plastic frames of the housing and then remove the top cover. Insert the supplied jumper into PCB position, marked CON7 in silk screen. In order to jumper the highpass filter, insert the supplied jumper into PCB position CON6.

13 History

Version	Date	Author	Changes
V1.0	5.11.2019	Mayerhofer	Creation of the document
V1.1	4.02.2020	Mayerhofer	Graphs updated

Table 5 – History