SIEMENS



Edition 11/2022

OPERATING INSTRUCTIONS

SIMOGEAR

LEN/LHN/LJN motors for mounting on SIMOGEAR gearboxes

BA 2330 (2KJ4)

www.siemens.com

SIEMENS

SIMOGEAR

LEN/LHN/LJN motors for mounting on SIMOGEAR gearboxes BA 2330 (2KJ4)

Operating Instructions

Introduction 1

Fundamental safety instructions 2

Specific safety instructions 3

Technical description 4

Incoming goods, transport, and storage 5

Installation 6

Commissioning 7

Operation 8

Faults, causes and remedies 9

Service and maintenance 10

Disposal 11

Technical data 12

Spare parts 13

11/2022

A5E50009086A/RS-AF

Legal information

Warning notice system

This manual contains notices you have to observe in order to ensure your personal safety, as well as to prevent damage to property. The notices referring to your personal safety are highlighted in the manual by a safety alert symbol, notices referring only to property damage have no safety alert symbol. These notices shown below are graded according to the degree of danger.

⚠**DANGER**
indicates that death or severe personal injury **will** result if proper precautions are not taken.

⚠**WARNING**
indicates that death or severe personal injury **may** result if proper precautions are not taken.

⚠**CAUTION**
indicates that minor personal injury can result if proper precautions are not taken.

NOTICE
indicates that property damage can result if proper precautions are not taken.

If more than one degree of danger is present, the warning notice representing the highest degree of danger will be used. A notice warning of injury to persons with a safety alert symbol may also include a warning relating to property damage.

Qualified Personnel

The product/system described in this documentation may be operated only by **personnel qualified** for the specific task in accordance with the relevant documentation, in particular its warning notices and safety instructions. Qualified personnel are those who, based on their training and experience, are capable of identifying risks and avoiding potential hazards when working with these products/systems.

Proper use of Siemens products

Note the following:

⚠**WARNING**
Siemens products may only be used for the applications described in the catalog and in the relevant technical documentation. If products and components from other manufacturers are used, these must be recommended or approved by Siemens. Proper transport, storage, installation, assembly, commissioning, operation and maintenance are required to ensure that the products operate safely and without any problems. The permissible ambient conditions must be complied with. The information in the relevant documentation must be observed.

Trademarks

All names identified by ® are registered trademarks of Siemens AG. The remaining trademarks in this publication may be trademarks whose use by third parties for their own purposes could violate the rights of the owner.

Disclaimer of Liability

We have reviewed the contents of this publication to ensure consistency with the hardware and software described. Since variance cannot be precluded entirely, we cannot guarantee full consistency. However, the information in this publication is reviewed regularly and any necessary corrections are included in subsequent editions.

Siemens AG
Digital Industries
Postfach 48 48
90026 NÜRNBERG
GERMANY

A5E50009086A/RS-AF
Ⓟ 11/2022 Subject to change

Copyright © Siemens AG 2020 - 2022.
All rights reserved

Table of contents

1 Introduction 7

1.1 About SIMOGEAR 7

1.2 About this manual 7
1.2.1 Content 7
1.2.2 Target group 8
1.2.3 Avoiding dangers 8
1.2.4 Standard scope 9
1.2.5 Websites of third parties 9

1.3 SIMOGEAR documentation 10

1.4 Service and support 11
1.4.1 Siemens Industry Online Support on the Web 11
1.4.2 Siemens Industry Online Support on the road 12
1.4.3 Feedback on the technical documentation 13
1.4.4 mySupport documentation 13
1.4.5 Technical support 14
1.4.6 Training 15
1.4.7 Spare parts services 15

1.5 Important product information 15
1.5.1 Use as prescribed 15
1.5.2 Reasonably predictable misuse 16

2 Fundamental safety instructions 17

2.1 General safety instructions 17

2.2 Equipment damage due to electric fields or electrostatic discharge 22

2.3 Security information 22

2.4 Residual risks of power drive systems 23

3 Specific safety instructions 25

3.1 General overview 25

3.2 Installation notes 26

3.3 Specific hazard types and fundamental obligations 27

4 Technical description 29

4.1 General technical description 29

4.2 Cooling 30

4.3 Backstop at the motor 30

4.4 Terminal box and application box 31

4.5 Rating plate 31

4.6 Surface treatment ... 32
4.6.1 General information on surface treatment ... 32
4.6.2 Painted version ... 32
4.6.3 Primed version ... 34

5 Incoming goods, transport, and storage ... 35

5.1 Incoming goods ... 35

5.2 Transport ... 36
5.2.1 General information on transport ... 36
5.2.2 Fastening for suspended transport ... 37

5.3 Storage ... 37

6 Installation ... 39

6.1 Unpacking ... 39

6.2 General Information on installation ... 39

6.3 Thread sizes and tightening torques for fastening bolts ... 40

6.4 Installation conditions for the motor ... 41

6.5 Condensation drain hole (optional) ... 41

6.6 Connecting the motor in the terminal box ... 42
6.6.1 General information on motor connection ... 42
6.6.2 Terminal box ... 43
6.6.3 Terminal marking ... 44
6.6.4 Direction of rotation ... 45
6.6.5 Connecting the cables in the terminal box ... 46
6.6.6 External grounding ... 46
6.6.7 Installation and routine ... 47
6.6.8 External fan (optional) ... 49

6.7 Operation on the converter ... 51

7 Commissioning ... 53

7.1 Checking the insulation resistance ... 53

7.2 Commissioning the motor ... 54

8 Operation ... 57

9 Faults, causes and remedies ... 59

10 Service and maintenance ... 61

10.1 General notes about maintenance ... 61

10.2 Locking the manual release of the brake (optional) ... 61

10.3 Lubrication ... 62

10.4 Cleaning the motor ... 64

10.5 Checking the tightness of fastening bolts ... 65

10.6 Inspection of the motor ... 65

10.7 Servicing the brake ... 66
10.7.1 Wear of the spring-operated brake ... 66

10.7.2 Maintenance intervals for the brake ... 67
10.7.3 Adjusting the air gap ... 67
10.7.4 Replacing the friction lining ... 70

11 Disposal ... 73

12 Technical data ... 75

12.1 Type designation ... 75

12.2 Rating plate data ... 76
12.2.1 General technical data ... 76
12.2.2 Rating plate SIMOGEAR geared motors ... 77

12.3 Weight ... 77

12.4 Circuit diagrams ... 78

13 Spare parts ... 81

13.1 Stocking of spare parts ... 81

13.2 Spares on Web ... 82

13.3 Lists of spare parts ... 83
13.3.1 Motor sizes 63 - 250 ... 83
13.3.2 Brake ... 87
13.3.3 Backstop ... 90
13.3.4 Encoder on fan cover ... 91
13.3.5 Encoder in the motor with external fan ... 92

Introduction 1

1.1 About SIMOGEAR

Description

SIMOGEAR is the Siemens product family of geared motors in Digital industry.

1.2 About this manual

1.2.1 Content

Description

These operating Instructions provide you with information about the geared motors and their associated components. You will learn about safety and professionally handling the geared motors - from the initial delivery up to final disposal:

- Transporting and storing
- Assembly and mounting
- Connecting
- Commissioning
- Checking
- Operation
- Troubleshooting
- Disassembling
- Disposal

This documentation should be kept in a location where it can be easily accessed and made available to the personnel responsible.

Information regarding third-party products

Note

Recommendation relating to third-party products

This document contains recommendations relating to third-party products. Siemens accepts the fundamental suitability of these third-party products.

You can use equivalent products from other manufacturers.

Siemens does not accept any warranty for the properties of third-party products.

1.2.2 Target group

Description

These operating instruction are intended for:

- Fitters
- Commissioning engineers
- Machine operators
- Service and maintenance personnel
- Warehouse personnel
- Personnel decommissioning the motor
- Personnel disposing of the motor

1.2.3 Avoiding dangers

Avoiding dangers

Avoid dangers. Ensure safe, problem-free operation and a maximum service life:

- Before you start using the motor, you must read these Operating Instructions
- Always follow the safety instructions and notices in these operating instructions.

The warning notice system is explained at the beginning of this document.

1.2.4 Standard scope

Description

This documentation describes the functionality of the standard scope. This scope may differ from the scope of the functionality of the system that is actually supplied. Please refer to the ordering documentation only for the functionality of the supplied drive system.

Further functions may be executable in the system, which are not explained in this documentation. However, there is no entitlement to these functions in the case of a new delivery or service.

This documentation does not contain all detailed information on all types of the product. Furthermore, this documentation cannot take into consideration every conceivable type of installation, operation and service/maintenance.

The machine manufacturer must document any additions or modifications they make to the product themselves.

1.2.5 Websites of third parties

Websites of third parties

This document includes hyperlinks to websites of third-party companies. Siemens is not responsible for and shall not be liable for these websites and is not responsible for the content or information they provide. Siemens does not control the information on these websites and is not responsible for the content and information provided there. The user bears the risk for their use.

1.3 SIMOGEAR documentation

Description

Comprehensive documentation on SIMOTICS, SIMOGEAR and on the SINAMICS converter family are provided in Internet (https://support.industry.siemens.com/cs/cn/en/ps/13204/man).

You can display documents or download them in PDF and HTML5 format.

The documentation is divided into the following categories:

Table 1- 1 SIMOTICS/SIMOGEAR/SINAMICS documentation

Information	Documentation class[1)]	Content	Target group
General information	Configuration Manual	Rules, guidelines, and tools for configuring products, systems, and plants. Also contains information on the operating and ambient conditions for hardware and software, the use of functions, as well as on circuit diagrams and terminal diagrams and the installation of software insofar as this is necessary for commissioning.	Planners, configuration engineers
Device information	Installation Instructions	All relevant information on setting up, installing and cabling, as well as the required dimensional drawings and circuit diagrams	Installation personnel, commissioning engineers, service and maintenance personnel
Basic information	Operating instructions	Comprehensive collection of all information necessary for the safe operation of products, plant/system parts and complete plants (IEC 82079)	Machine operators, plant operators
	Compact instructions	Essential contents of the operating instructions in reduced and compressed form	Machine operators, plant operators
	Product information	Information that only becomes known shortly before or even after start of delivery and is therefore not included in the associated user documentation	Planners, configuration engineers, technologists, installation personnel, constructors; commissioning engineers, machine operators, programmers, service and maintenance personnel
	Online help	Instructions for configuring, programming, and commissioning	Configuration engineers, programmers, commissioning engineers

1) Not all documentation classes are available for every SIMOTICS/SIMOGEAR/SINAMICS product.

1.4 Service and support

1.4.1 Siemens Industry Online Support on the Web

Description

The following is available via Siemens Industry Online Support (https://support.industry.siemens.com/cs/ww/en/), among others:

- Product support
- Global forum for information and best practice sharing between users and specialists
- Local contact persons via the contact person database (→ Contact)
- Information about field services, repairs, spare parts, and much more (→ Services)
- Search for product info
- Important topics at a glance
- FAQs (frequently asked questions)
- Application examples
- Manuals
- Downloads
- Compatibility tool
- Newsletters with information about your products
- Catalogs/brochures

1.4.2 Siemens Industry Online Support on the road

Description



Figure 1-1 "Siemens Industry Online Support" app

The "Industry Online Support" app supports you in the following areas, for example:

- Resolving problems when executing a project
- Troubleshooting when faults develop
- Expanding a system or planning a new system

Furthermore, you have access to the Technical Forum and other articles that our experts have drawn up:

- FAQs
- Application examples
- Manuals
- Certificates
- Product announcements and much more

There is a Data Matrix code on the nameplate of your product. If you scan the code using the "Industry Online Support" app, you will obtain technical information about the device.

The app is available for Apple iOS and Android.

1.4.3 Feedback on the technical documentation

Description

We welcome your questions, suggestions, and corrections for this technical documentation. Please use the "Provide feedback" link at the end of the entries in Siemens Industry Online Support.

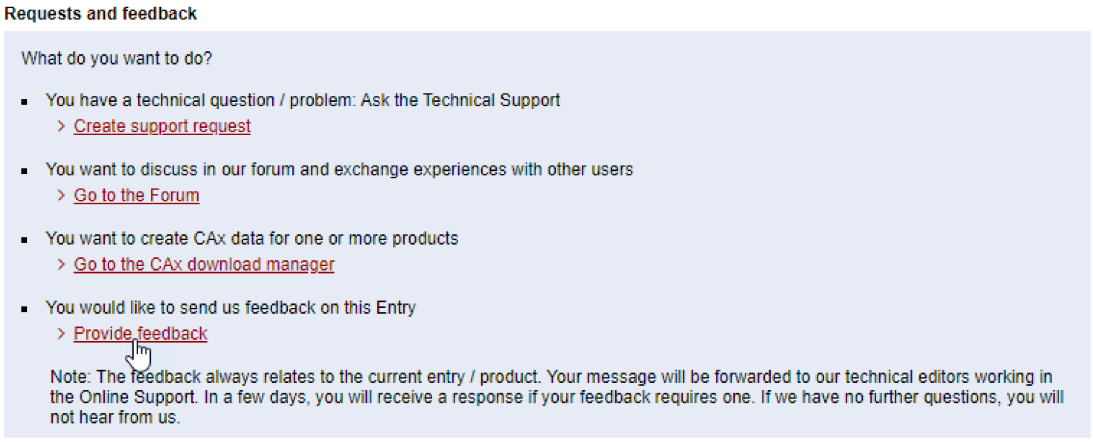

Figure 1-2 Requests and feedback

1.4.4 mySupport documentation

Description

With the "mySupport documentation" web-based system, you can compile your own individual documentation based on Siemens content and adapt this for your own machine documentation.

To start the application, click the "My Documentation" tile on the mySupport homepage (https://support.industry.siemens.com/cs/ww/en/my).

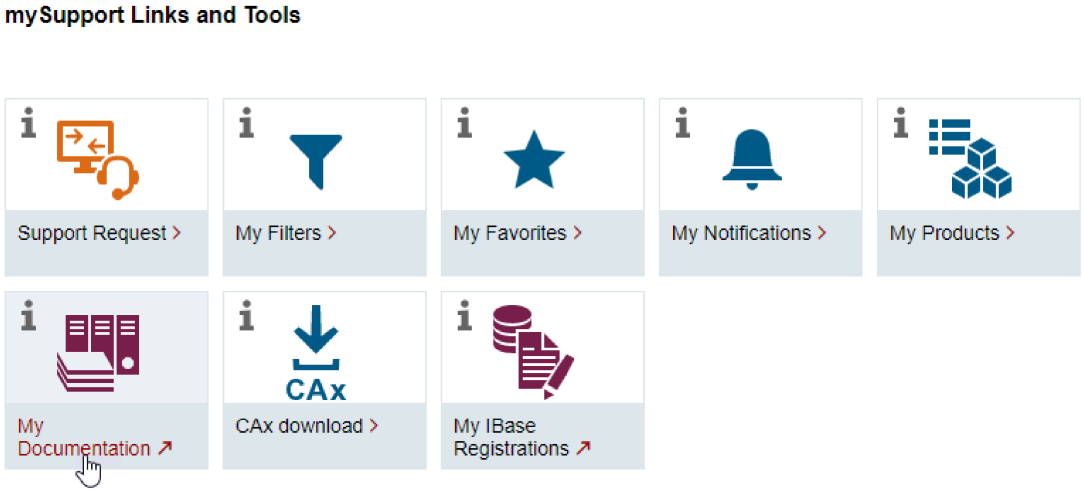

Figure 1-3 mySupport

The configured manual can be exported in RTF, PDF or XML format.

Siemens content that supports the mySupport documentation can be identified by the "Configure" link.

1.4.5 Technical support

Description

Your routes to technical support (https://support.industry.siemens.com/cs/ww/en/sc/4868):

- Support Request (https://support.industry.siemens.com/cs/my/src?lc=en-US)
- Contact person database (https://www.automation.siemens.com/aspa_app?lang=en)
- "Industry Online Support" mobile app

The Support Request is the most important input channel for questions relating to products from Siemens Industry. This will assign your request a unique ticket number for tracking purposes.

The Support Request offers you:

- Direct access to technical experts
- Recommended solutions for various questions (e.g. FAQs)
- Status tracking of your requests

Technical support also assists you in some cases via remote support (https://support.industry.siemens.com/cs/ww/en/view/106665159) to resolve your requests. A Support representative will assist you in diagnosing or resolving the problem through screen transfer.

More information on the Support service packages is available on the Internet via the following address (https://support.industry.siemens.com/cs/ww/en/sc/4869).

1.4.6 Training

Description

SITRAIN – Digital Industry Academy offers a comprehensive range of training courses on Siemens industrial products – directly from the manufacturer, for all industries and use cases, for all knowledge levels from beginner to expert.

More information can be found on the Internet via the following address (https://www.siemens.com/sitrain).

1.4.7 Spare parts services

Description

By using the online spare parts service "Spares on Web", you ensure the smooth operation of your product. The spare parts service is aimed at the following:

- Improved spare parts inventories by balancing stock and spare parts on call
- Minimized downtimes during a plant standstill
- Reduced costs

More information can be found on the Internet via the following address (https://www.sow.siemens.com/?lang=en).

1.5 Important product information

1.5.1 Use as prescribed

Note

The motors are part of the geared motors. Geared motors, in the sense of the current EC Machinery Directive 2006/42/EC, are partly completed machines for installation into machinery or other partly completed machinery, equipment or plants.

Based on the area of validity of these directives, commissioning is prohibited until it has been absolutely identified that the end product is in conformance with these directives.

The motors have been designed for stationary use in general mechanical engineering applications.

They comply with the harmonized standards of the series EN 60034 (VDE 0530). They are not approved for operation in hazardous zones and areas.

Unless otherwise agreed, the motors are intended for use in machines, other incomplete machines or equipment and systems in the industrial environment.

The motors have been built using state-of-the-art technology and are shipped in an operationally reliable condition. Changes made by users could affect this operational reliability and are forbidden.

Note

The data on the rating plate assumes an installation altitude of up to 1 000 m above sea level.

The permissible ambient temperature is stamped on the rating plate.

In the case of other ambient temperatures and installation altitudes, contact Technical Support.

The motors have been designed for the application described in Section Technical data (Page 75). Do not operate the motor outside the specified power limit. Other operating conditions must be contractually agreed.

Never use degrees of protection ≤ IP54 outdoors. Air-cooled versions are designed for ambient temperatures of -20 °C to +40 °C as standard and for an installation altitude of up to 1000 m above sea level. Observe and comply with deviations to the data on the rating plate. Conditions at the location of use must comply with all specifications on the rating plate.

Do not climb on the motor. Do not place any objects on the motor.

1.5.2 Reasonably predictable misuse

Reasonably predictable misuse

Using the geared motor in a way that SIEMENS did not intend will destroy or damage the geared motor.

Use the geared motor in accordance with the following points.

- Do not use the geared motor in hazardous zones.
- Do not directly connect the geared motor to the line supply.
- Do not use the geared motor outside the environmental conditions specified in ChapterUse as prescribed (Page 15).
- Do not use the geared motor as generator.
- Comply with the data stamped on the rating plate.
- Do not use the holding brake to reduce the motor speed.

Fundamental safety instructions 2

2.1 General safety instructions



⚠ WARNING

Electric shock and danger to life due to other energy sources

Touching live components can result in death or severe injury.

- Only work on electrical devices when you are qualified for this job.
- Always observe the country-specific safety rules.

Generally, the following steps apply when establishing safety:

1. Prepare for disconnection. Notify all those who will be affected by the procedure.
2. Isolate the drive system from the power supply and take measures to prevent it being switched back on again.
3. Wait until the discharge time specified on the warning labels has elapsed.
4. Check that there is no voltage between any of the power connections, and between any of the power connections and the protective conductor connection.
5. Check whether the existing auxiliary supply circuits are de-energized.
6. Ensure that the motors cannot move.
7. Identify all other dangerous energy sources, e.g. compressed air, hydraulic systems, or water. Switch the energy sources to a safe state.
8. Check that the correct drive system is completely locked.

After you have completed the work, restore the operational readiness in the inverse sequence.



⚠ WARNING

Electric shock due to connection to an unsuitable power supply

When equipment is connected to an unsuitable power supply, exposed components may carry a hazardous voltage. Contact with hazardous voltage can result in severe injury or death.

- Only use power supplies that provide SELV (Safety Extra Low Voltage) or PELV-(Protective Extra Low Voltage) output voltages for all connections and terminals of the electronics modules.



⚠WARNING

Electric shock due to damaged motors or devices

Improper handling of motors or devices can damage them.

Hazardous voltages can be present at the enclosure or at exposed components on damaged motors or devices.

- Ensure compliance with the limit values specified in the technical data during transport, storage and operation.
- Do not use any damaged motors or devices.



⚠WARNING

Electric shock due to unconnected cable shield

Hazardous touch voltages can occur through capacitive cross-coupling due to unconnected cable shields.

- As a minimum, connect cable shields and the conductors of power cables that are not used (e.g. brake cores) at one end at the grounded housing potential.



⚠WARNING

Electric shock if there is no ground connection

For missing or incorrectly implemented protective conductor connection for devices with protection class I, high voltages can be present at open, exposed parts, which when touched, can result in death or severe injury.

- Ground the device in compliance with the applicable regulations.



⚠WARNING

Arcing when a plug connection is opened during operation

Opening a plug connection when a system is operation can result in arcing that may cause serious injury or death.

- Only open plug connections when the equipment is in a voltage-free state, unless it has been explicitly stated that they can be opened in operation.

NOTICE

Property damage due to loose power connections

Insufficient tightening torques or vibration can result in loose power connections. This can result in damage due to fire, device defects or malfunctions.

- Tighten all power connections to the prescribed torque.
- Check all power connections at regular intervals, particularly after equipment has been transported.

NOTICE

Damage to equipment due to unsuitable tightening tools.

Unsuitable tightening tools or fastening methods can damage the screws of the equipment.

- Only use screw inserts that exactly match the screw head.
- Tighten the screws with the torque specified in the technical documentation.
- Use a torque wrench or a mechanical precision nut runner with a dynamic torque sensor and speed limitation system.
- Adjust the tools used regularly.

⚠ WARNING

Unexpected machine movement caused by radio devices or mobile phones

Using radio devices, cellphones, or mobile WLAN devices in the immediate vicinity of the components can result in equipment malfunction. Malfunctions may impair the functional safety of machines and can therefore put people in danger or lead to property damage.

- Therefore, if you move closer than 20 cm to the components, be sure to switch off radio devices, cellphones or WLAN devices.
- Use the "SIEMENS Industry Online Support app" only on equipment that has already been switched off.

⚠ WARNING

Unrecognized dangers due to missing or illegible warning labels

Dangers might not be recognized if warning labels are missing or illegible. Unrecognized dangers may cause accidents resulting in serious injury or death.

- Check that the warning labels are complete based on the documentation.
- Attach any missing warning labels to the components, where necessary in the national language.
- Replace illegible warning labels.

⚠WARNING

Unexpected movement of machines caused by inactive safety functions

Inactive or non-adapted safety functions can trigger unexpected machine movements that may result in serious injury or death.

- Observe the information in the appropriate product documentation before commissioning.
- Carry out a safety inspection for functions relevant to safety on the entire system, including all safety-related components.
- Ensure that the safety functions used in your drives and automation tasks are adjusted and activated through appropriate parameterizing.
- Perform a function test.
- Only put your plant into live operation once you have guaranteed that the functions relevant to safety are running correctly.

⚠WARNING

Active implant malfunctions due to electromagnetic fields

Electromagnetic fields (EMF) are generated by the operation of electrical power equipment, such as transformers, converters, or motors. People with pacemakers or implants are at particular risk in the immediate vicinity of this equipment.

- If you have a heart pacemaker or implant, maintain the minimum distance specified in chapter "Correct usage" from such motors.



⚠WARNING

Active implant malfunctions due to permanent-magnet fields

Even when switched off, electric motors with permanent magnets represent a potential risk for persons with heart pacemakers or implants if they are close to converters/motors.

- If you have a heart pacemaker or implant, maintain the minimum distance specified in chapter "Correct usage".
- When transporting or storing permanent-magnet motors always use the original packing materials with the warning labels attached.
- Clearly mark the storage locations with the appropriate warning labels.
- IATA regulations must be observed when transported by air.

⚠WARNING

Injury caused by moving or ejected parts

Contact with moving motor parts or drive output elements and the ejection of loose motor parts (e.g. feather keys) out of the motor enclosure can result in severe injury or death.

- Remove any loose parts or secure them so that they cannot be flung out.
- Do not touch any moving parts.
- Safeguard all moving parts using the appropriate safety guards.

⚠WARNING

Fire due to inadequate cooling

Inadequate cooling can cause the motor to overheat, resulting in smoke and fire. Possible consequences can be serious injury or death. This can also result in increased failures and reduced service lives of motors.

- Comply with the specified cooling requirements for the motor.

⚠WARNING

Fire due to incorrect operation of the motor

When incorrectly operated and in the case of a fault, the motor can overheat resulting in fire and smoke. This can result in severe injury or death. Further, excessively high temperatures destroy motor components and result in increased failures as well as shorter service lives of motors.

- Operate the motor according to the relevant specifications.
- Only operate the motors in conjunction with effective temperature monitoring.
- Immediately switch off the motor if excessively high temperatures occur.



⚠CAUTION

Burn injuries caused by hot surfaces

In operation, the motor can reach high temperatures, which can cause burns if touched.

- Mount the motor so that it is not accessible in operation.

Measures when maintenance is required:

- Allow the motor to cool down before starting any work.
- Use the appropriate personnel protection equipment, e.g. gloves.

2.2 Equipment damage due to electric fields or electrostatic discharge

Electrostatic sensitive devices (ESD) are individual components, integrated circuits, modules or devices that may be damaged by either electric fields or electrostatic discharge.



NOTICE

Equipment damage due to electric fields or electrostatic discharge

Electric fields or electrostatic discharge can cause malfunctions through damaged individual components, integrated circuits, modules or devices.

- Only pack, store, transport and send electronic components, modules or devices in their original packaging or in other suitable materials, e.g conductive foam rubber of aluminum foil.
- Only touch components, modules and devices when you are grounded by one of the following methods:
  - Wearing an ESD wrist strap
  - Wearing ESD shoes or ESD grounding straps in ESD areas with conductive flooring
- Only place electronic components, modules or devices on conductive surfaces (table with ESD surface, conductive ESD foam, ESD packaging, ESD transport container).

2.3 Security information

Siemens provides products and solutions with industrial security functions that support the secure operation of plants, systems, machines and networks.

In order to protect plants, systems, machines and networks against cyber threats, it is necessary to implement – and continuously maintain – a holistic, state-of-the-art industrial security concept. Siemens' products and solutions constitute one element of such a concept.

Customers are responsible for preventing unauthorized access to their plants, systems, machines and networks. Such systems, machines and components should only be connected to an enterprise network or the internet if and to the extent such a connection is necessary and only when appropriate security measures (e.g. firewalls and/or network segmentation) are in place.

For additional information on industrial security measures that may be implemented, please visit
https://www.siemens.com/industrialsecurity (https://www.siemens.com/industrialsecurity).

Siemens' products and solutions undergo continuous development to make them more secure. Siemens strongly recommends that product updates are applied as soon as they are available and that the latest product versions are used. Use of product versions that are no longer supported, and failure to apply the latest updates may increase customer's exposure to cyber threats.

To stay informed about product updates, subscribe to the Siemens Industrial Security RSS Feed under
https://www.siemens.com/cert
(https://new.siemens.com/global/en/products/services/cert.html#Subscriptions).

Further information is provided on the Internet:

Industrial Security Configuration Manual
(https://support.industry.siemens.com/cs/ww/en/view/108862708)

⚠ WARNING

Unsafe operating states resulting from software manipulation

Software manipulations, e.g. viruses, Trojans, or worms, can cause unsafe operating states in your system that may lead to death, serious injury, and property damage.

- Keep the software up to date.
- Incorporate the automation and drive components into a holistic, state-of-the-art industrial security concept for the installation or machine.
- Make sure that you include all installed products into the holistic industrial security concept.
- Protect files stored on exchangeable storage media from malicious software by with suitable protection measures, e.g. virus scanners.
- On completion of commissioning, check all security-related settings.

2.4 Residual risks of power drive systems

When assessing the machine- or system-related risk in accordance with the respective local regulations (e.g., EC Machinery Directive), the machine manufacturer or system installer must take into account the following residual risks emanating from the control and drive components of a drive system:

1. Unintentional movements of driven machine or system components during commissioning, operation, maintenance, and repairs caused by, for example,
   - Hardware and/or software errors in the sensors, control system, actuators, and cables and connections
   - Response times of the control system and of the drive
   - Operation and/or environmental conditions outside the specification
   - Condensation/conductive contamination
   - Parameterization, programming, cabling, and installation errors
   - Use of wireless devices/mobile phones in the immediate vicinity of electronic components
   - External influences/damage
   - X-ray, ionizing radiation and cosmic radiation

2. Unusually high temperatures, including open flames, as well as emissions of light, noise, particles, gases, etc., can occur inside and outside the components under fault conditions caused by, for example:
   - Component failure
   - Software errors
   - Operation and/or environmental conditions outside the specification
   - External influences/damage
3. Hazardous shock voltages caused by, for example:
   - Component failure
   - Influence during electrostatic charging
   - Induction of voltages in moving motors
   - Operation and/or environmental conditions outside the specification
   - Condensation/conductive contamination
   - External influences/damage
4. Electrical, magnetic and electromagnetic fields generated in operation that can pose a risk to people with a pacemaker, implants or metal replacement joints, etc., if they are too close
5. Release of environmental pollutants or emissions as a result of improper operation of the system and/or failure to dispose of components safely and correctly
6. Influence of network-connected communication systems, e.g. ripple-control transmitters or data communication via the network

For more information about the residual risks of the drive system components, see the relevant sections in the technical user documentation.

Specific safety instructions

3

3.1 General overview

Note

Siemens does not accept any liability for damage and operational disturbances that result from the non-observance of these operating instructions.

Note

EU RoHS Directive

The SIMOGEAR series of geared motors comply with the stipulations laid down in Directive 2011/65/EU.

These operating instructions can be found in SIOS (https://support.industry.siemens.com/cs/cn/en/ps/27868/man). Read the operating instructions before handling the motor. Comply with the instructions. This is the best way of ensuring safe and disturbance-free operation.

These operating instructions apply to motors for mounting onto the series of SIMOGEAR gearboxes.

Note

In addition to these operating instructions, special contractual agreements and technical documentation apply to a special motor design and the associated supplementary equipment.

When using additional components, carefully observe the notes in the associated documentation.

These operating instructions apply to motors for mounting onto the series of SIMOGEAR gearboxes.

Valid operating instructions for SIMOGEAR

Operating instructions for SIMOGEAR can be found in SIOS (https://support.industry.siemens.com/cs/cn/en/ps/27868/man).

- BA 2030 (2KJ4) - operating instructions for SIMOGEAR gearboxes
- BA 2039 (2KJ4) - operating instructions for adapters for mounting on SIMOGEAR gearboxes
- BA 2330 (2KJ4) - operating instructions for LEN/LHN/LJN motors for mounting on SIMOGEAR gearboxes

3.2 Installation notes

NOTICE
Impermissible housing loadings when unevenness present Ensure that the housing feet and flanges are screwed together without distortion. The foundation structure must be low-vibration, level and torsionally rigid. The evenness of the mounting surface for gearboxes in foot and flange design must be according to DIN ISO 2768-2. Max. deviations are to be taken from the tolerance class K. Thoroughly remove any dirt from the foundation and the screw mounting surface of the gearbox.

NOTICE
Impermissible external forces No additional external forces resulting from customer-specific attachments, support of other components on the gearbox or geared motor are permitted. The installation of original attachments (oil expansion unit, cover hoods, etc.) and the resulting forces are permitted.

Prerequisites for smooth, vibration-free running

- Stable foundation design\
- Precise alignment of the machine
- Correct balancing of the parts to be mounted on the shaft extension
- Compliance with vibration severity values according to ISO 20816-1

Vibration severity

Due to the influencing variables listed below, the vibration response of the system at the location of use can lead to increased vibration severity on the drive unit:

- Transmission elements
- Installation conditions
- Alignment and installation
- Effects of external and internal oscillation

The vibration severity values specified in accordance with ISO 20816-1 must not be exceeded at any point on the surface of the drive. This ensures problem-free operation and a long service life.

Maximum permissible vibration severity

Observe the values for the maximum permissible radial and axial oscillation vibration severity in the following table. Radial/axial refers to the motor axes.

Maximum permissible radial vibration levels

Vibration frequency	Vibration value
< 6.3 Hz	Vibration displacements ≤ 0.16 mm
6.3 Hz to 250 Hz	Vibration velocity v_{rms} ≤ 4.5 mm/s
> 250 Hz	Vibration acceleration a_{peak} ≤ 10 m/s²

Maximum permissible axial vibration severity

Vibration velocity	Vibration acceleration
Vibration velocity v_{rms} ≤ 4.5 mm/s	Vibration acceleration a_{peak} ≤ 10 m/s²

Resonant frequencies

Resonance can occur in the speed range of the geared motor depending on the machine to be driven.

Operation in resonance causes increased noise and vibration levels.

Adherence to the maximum permissible vibration severity is always required.

Operation in the resonant frequency leads to a reduced service life of the geared motor, irrespective of adherence to the maximum vibration severity.

Continuous operation in the resonant frequency must be avoided.

3.3 Specific hazard types and fundamental obligations

⚠ WARNING

Hot, escaping oil

Before starting any work wait until the oil has cooled down to below +30 °C.

⚠ WARNING

Poisonous vapors when working with solvents

Avoid breathing vapors when working with solvents.

Ensure adequate ventilation.

⚠ WARNING

Risk of explosion when working with solvents

Ensure adequate ventilation.

Do not smoke.

The company operating the unit must ensure that all persons assigned to work on the geared motor have read and understood these operating instructions and that they comply with them in all points in order to:

- Eliminate the risk to life and limb of users and others
- Ensure the operational safety of the geared motor.
- Avoid disruptions and environmental damage through incorrect use.

Comply with the following safety instructions:

In addition to the specified personal protection gear, also wear suitable protective gloves and safety glasses.

Comply with the instructions on the rating plates attached to the geared motor. The rating plates must be kept free from paint and dirt at all times. Replace any missing rating plates.

Collect and dispose of used oil in accordance with regulations. Immediately remove any spilt oil with an oil-binding agent.

Do not use high-pressure cleaning equipment or sharp-edged tools to clean the geared motor.

The machine OEM who installs the geared motors in a plant must include the regulations contained in these operating instructions in its own operating instructions.

During operation, comply with the vibration levels according to ISO 20816-1. Maximum permissible vibration values can be found inInstallation notes (Page 26).

Technical description

4

4.1 General technical description

The motor complies with the following regulations:

Table 4- 1 Overview of the standards

Topic	IEC standard	Chinese standard
Dimensions and operation characteristics	IEC 60034-1	GB/T 755
Degree of protection	IEC 60034-5	GB/T 4942.1
Cooling	IEC 60034-6	GB/T 1993
Mounting position according to modular system	IEC 60034-7	GB/T 997
Terminal marking and direction of rotation	IEC 60034-8	GB/T 1971
Noise emission	IEC 60034-9	GB 10069.3
Thermal protection	IEC 60034-11	-
Starting characteristics for rotating electrical motors	IEC 60034-12	-
Vibration severity levels	IEC 60034-14	GB 10068
IEC standard voltages	IEC 60038	GB/T 156
Safety of machinery	IEC 60204-1	-

The motor is equipped with grease-lubricated roller bearings. The bearings are permanently lubricated.

The stator winding is designed for temperature class 155 (F). The stator winding can be optionally implemented with temperature class 180 (H).

In the standard version, the rotor corresponds to vibration severity level A.

The technical data for the optional monitoring equipment can be viewed in the circuit diagrams, on the rating plate or in the special order documents.

The stator housing and bearing shields are made of die-cast aluminum or cast iron.

The surface of the stator housing is equipped with cooling fins and a mounted terminal box or motor connector.

4.2 Cooling

NOTICE
Dust deposits prevent heat radiation
Dust deposits prevent heat radiation and cause a high housing temperature.
Keep the motor free from dirt, dust and so on.

The motor is designed to be cooled by means of fins. An external fan draws in the cooling air through the aperture in the fan cover and blows the air over the surface of the stator housing.

4.3 Backstop at the motor

NOTICE
Service life limited
Drive speeds below 1000 rpm or frequent starting and stopping operations (≥ 20 starts / stops per hour) will limit service life.
Ensure that the backstop is replaced in time when frequent starting and stopping operations are performed.

NOTICE
Damage or destruction due to incorrect direction of rotation
Do not run the motor against the backstop.
Note the directional arrow on the motor.

Note

The backstop is not suitable for ambient temperatures under -25 °C.

The motor can be fitted with a mechanical backstop. The backstop permits only the correct direction of rotation during operation. The motor is marked by an arrow pointing in the corresponding direction.

The backstop is fitted with centrifugally operated sprags. When the motor is running in the specified direction, the inner ring and the cage with the sprags also rotate while the outer ring remains stationary.

If the drive speed exceeds the speed listed in the table, the sprag rises. The backstop is wear-free. The backstop does not require any maintenance.

Table 4- 2 Minimum drive speed when using backstops

Motor size	**Backstop**	**Speed**
		[rpm]
71	FXM31-17DX	> 890
80	FXM31-17DX	> 890
90, 100, 112	FXM38-17DX	> 860
132	FXM61-19DX	> 750
160	FXM66-25DX	> 730
180, 200	FXM76-25DX	> 670
225, 250	FXM86-25DX	> 630

4.4 Terminal box and application box

The following are contained in the motor terminal box:

- Terminals for the motor (terminal board)
- Terminals for checking equipment
- Terminals for anti-condensation heating
- Connector for the brake

The number of available terminals is shown in the circuit diagrams. The circuit diagrams are located in the terminal box.

4.5 Rating plate

The rating plate on the gearbox or geared motor is of coated aluminum foil. The rating plate is glued using a special masking film. The film ensures permanent resistance to UV radiation and media of all kinds, such as oils, greases, salt water and cleaning agents.

The adhesive and the material ensure firm adhesion and long-term readability within the operating temperature ranges from -40 ℃ to +155 ℃.

The edges of the rating plate are paint-finished to match the color of the gearbox or motor to which it is affixed.

4.6 Surface treatment

4.6.1 General information on surface treatment

All paint finishes are sprayed on.

NOTICE
Failure of the external protection If the paint finish is damaged, the geared motor may corrode. Do not damage the paint finish.

Note

Information about the ability to be repainted does not guarantee the quality of the paint product supplied by your supplier.

Only the paint manufacturer is liable for the quality and compatibility.

Note

C1 paints are not suitable for ambient air temperatures under -20 °C.

4.6.2 Painted version

The corrosion protection system is classified according to the corrosiveness categories in DIN EN ISO 12944-2.

Table 4- 3 Paint according to corrosiveness categories

Paint system	Description
Corrosiveness category C1, unpainted for gearbox and motor housings made of aluminum	
-	• Indoor installation • Heated buildings with neutral atmospheres • Resistance to greases and some resistance to mineral oils, aliphatic solvents • Standard
Corrosiveness category C1 for normal environmental stress	
2-component polyurethane top coat (aluminium housing), 2-component epoxy paint base coat + 2-component polyurethane top coat (cast iron housing)	• Indoor installation • Heated buildings with neutral atmospheres • Resistance to greases and some resistance to mineral oils, aliphatic solvents • Standard paint for gearbox housings made of cast iron

Paint system	Description
Corrosiveness category C2 for low environmental stress	
2-component epoxy paint base coat, 2-component polyurethane top coat	• Indoor and outdoor installation • Unheated buildings with condensation, production areas with low humidity, for example warehouses and sports facilities • Atmospheres with little contamination, mostly rural areas • Resistance to greases, mineral oils and sulfuric acid (10%), caustic soda (10%) and some resistance to aliphatic solvents
Corrosiveness category C3 for medium environmental stress	
2-component epoxy paint base coat, 2-component polyurethane top coat	• Indoor and outdoor installation • Production areas with high humidity and some air contamination, for example food production areas, dairies, breweries and laundries • Urban and industrial atmospheres, moderate contamination from sulfur dioxide, coastal areas with low salt levels • Resistance to greases, mineral oils, aliphatic solvents, sulfuric acid (10%), caustic soda (10%)
Corrosiveness category C4 for high environmental stress	
2-component epoxy paint base coat, 2-component epoxy paint intermediate coat, 2-component polyurethane top coat	• Indoor and outdoor installation • Chemical plants, swimming pools, wastewater treatment plants, electroplating shops, and boathouses above seawater • Industrial areas and coastal areas with moderate salt levels • Resistance to greases, mineral oils, aliphatic solvents, sulfuric acid (10%), caustic soda (10%)
Corrosiveness category C5 for very high environmental stress	
2-component epoxy paint base coat, 2-component epoxy paint intermediate coat, 2-component polyurethane top coat	• Indoor and outdoor installation • Buildings and areas with almost constant condensation and high contamination, for example malt factories and aseptic areas • Industrial areas with high humidity and aggressive atmosphere, coastal areas and offshore environments with high salt levels • Resistance to greases, mineral oils, aliphatic solvents, sulfuric acid (10%), caustic soda (20%)

In case of corrosiveness category C1, if you need to refurbish the paint, you can overpaint with a 1-component water-based paint after grinding.

In case of corrosiveness categories C2 to C5, if you need to refurbish the paint, you can overpaint with 2-component polyurethane top coat, 2-component epoxide paint intermediate coat, and 2-component epoxy paint base coat after grinding.

4.6.3 Primed version

Table 4- 4 Primer according to corrosiveness category

Paint system	**Can be overpainted with**
Unpainted corrosiveness category C1	
Cast iron parts immersion primed, steel parts primed or zinc-plated, aluminum and plastic parts untreated	• Synthetic paint, synthetic resin paint, oil paint • 2-component polyurethane paint • 2-component epoxy paint
Primed according to corrosiveness category C2 G	
2-component epoxy zinc phosphate, desired coat thickness 60 µm	• 2-component - polyurethane paint • 2-component - epoxy paint • 2-component - acrylic paint • Acid-hardening paint

Incoming goods, transport, and storage

5

5.1 Incoming goods

NOTICE
Transport damage impairs correct function
Do not commission faulty gearboxes or geared motors.

Note

Do not open or damage parts of the packaging that preserve the product.

Note

Check that the technical specifications are in accordance with the purchase order.

Inspect the delivery immediately on arrival for completeness and any transport damage.

Notify the freight company of any damage caused during transport immediately (this is the only way to have damage rectified free of charge). Siemens AG will not accept any claims relating to items missing from the delivery and which are submitted at a later date.

The gearbox or geared motor is delivered in a fully assembled condition. Additional items are sometimes delivered packaged separately.

The products supplied are listed in the dispatch papers.

5.2 Transport

5.2.1 General information on transport

NOTICE
The use of force will damage the gearbox or geared motor
Transport the gearbox or geared motor carefully. Avoid knocks.
Before putting the drive into operation, remove any transport fixtures and keep them safe or render them ineffective. You can then use them again for transporting further items or you can apply them again.

Different forms of packaging may be used, depending on the size of the gearbox or geared motor and the method of transport. Unless contractually agreed otherwise, the seaworthy packaging complies with HPE Packaging Guidelines (Bundesverband Holzpackmittel Paletten Exportverpackungen e.V., the German Federal Association for wooden packaging, pallets, and export packaging).

Note the symbols which appear on the packaging. These have the following meanings:

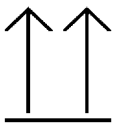
This way up


Center of gravity


Fragile


Do not use hand hook


Keep dry


Attach here

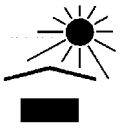
Keep cool

5.2.2 Fastening for suspended transport

⚠WARNING

Motors may come loose during transport if not adequately secured

Do not use the integrally cast lifting eyes ① on the motor to transport the geared motors due to the risk of breaking. Only use the integrally cast eyebolts ① to transport the motor prior to mounting or following removal.

If necessary, use additional, suitable lifting accessories for transport or during installation.

When attaching by a number of chains and ropes just two strands must be sufficient to bear the entire load. Secure lifting equipment so that it cannot slip.

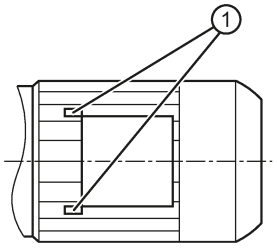

① Integrally cast eye on the motor

Figure 5-1 Motor attached for suspended transport

5.3 Storage

⚠WARNING

Danger of serious injuries caused by falling objects

Danger of damage to the motor when stacked

Do not stack gearboxes or geared motors on each other.

NOTICE

Failure of the external protection

Mechanical damage, chemical damage and thermal damage, such as scratches, acids, alkalis, sparks, welding beads and heat cause corrosion.

Do not damage the paint finish.

Unless contractually agreed otherwise, the warranty period for the standard preservative lasts 6 months from the date of delivery.

In the case of storage in transit over 6 months, special arrangements must be made for preservation. Please contact Technical Support.

Store the gearbox or geared motor in dry, dust-free rooms that are maintained at a constant temperature.

The storage location must be vibration- and shock-free.

The free shaft extensions, sealing elements and flange surfaces must have a protective coating.

Do not store the geared motor on the fan cover.

Storage up to 36 months (optional)

Store the gearbox or geared motor in dry, dust-free rooms that are maintained at a constant temperature. Special packing is then not necessary.

If such premises are not available, pack the gearbox or the geared motor in plastic film or air-tight sealed film and materials. The films and materials must be able to absorb moisture. Cover them to provide protection against heat, direct sunlight and rain.

The permissible ambient temperature is -25 °C to +50 °C.

The life of the corrosion protection is 36 months from delivery.

Installation 6

6.1 Unpacking

NOTICE
Transport damage impairs the correct function of the geared motor
Never commission faulty or defective motors.

Check the motor for completeness and damage. Report any missing parts or damage immediately.

Remove and dispose of the packaging material and transport equipment in compliance with regulations.

6.2 General Information on installation

⚠ WARNING
The plant can accelerate or decelerate uncontrolled under load
The entire system must be load-free so that there is no danger when carrying out this work.

NOTICE
Overheating of the motor due to exposure to direct sunlight
Provide suitable protective equipment such as covers or roofs. Prevent heat accumulation.

NOTICE
Malfunction resulting from foreign objects
The operator must ensure that no foreign objects impair the function of the motor.

Note

Use headless screws of strength class 8.8 or higher to fasten the motor.

Exercise particular care during mounting and installation. The manufacturer cannot be held liable for damage caused by incorrect mounting and installation.

Make sure that there is enough space around the motor for mounting, maintenance and repair.

On geared motors with a fan, leave enough free space for the entry of air. Observe the installation conditions for the geared motor.

Provide sufficient lifting tools at the beginning of mounting and fitting work.

Use all the fastening methods that have been assigned to the particular mounting position and mounting type.

Cap screws cannot be used in some cases due to a lack of space. In such cases, please contact Technical Support quoting the type of gearbox.

6.3 Thread sizes and tightening torques for fastening bolts

The general tolerance for the tightening torque is 10%. The tightening torque is based on a friction coefficient of μ = 0.14.

Table 6- 1 Tightening torques for fastening bolts

Thread size	Tightening torque for strength class		
	8.8	10.9	12.9
	[Nm]	[Nm]	[Nm]
M4	3	4	5
M5	6	9	10
M6	10	15	18
M8	25	35	41
M10	50	70	85
M12	90	120	145
M16	210	295	355
M20	450	580	690
M24	750	1000	1200
M30	1500	2000	2400
M36	2500	3600	4200

6.4 Installation conditions for the motor

NOTICE
Danger of overheating due to insufficient cooling
Protect intake and outlet ports against blockages and coarse dust.
The cooling air must flow unimpeded into the air inlets and flow out through the air outlets. Exhaust air should not be drawn back in again.

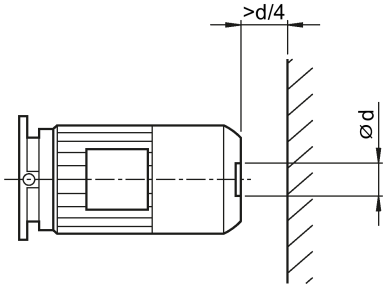

Figure 6-1 Installation condition for the SIMOGEAR motor

The permissible coolant temperature (ambient temperature at installation location) is -20 °C to +40 °C as standard for an installation altitude of up to 1000 m above sea level. Deviating data are specified on the rating plate.

For the vertical mounting position with the fan cover facing upwards, provide protection to prevent foreign objects falling in, for example, with an appropriate cover.

6.5 Condensation drain hole (optional)

When installing the surface-cooled motor, take care that the condensation drain holes are at the lowest point.

6.6 Connecting the motor in the terminal box

6.6.1 General information on motor connection

⚠DANGER

Unintentional starting of the drive component

Any work on the stationary machine must be performed with the machine isolated from the supply and secured so that it cannot be switched on again. This also applies to auxiliary circuits, for example anti-condensation heating.

Check that the component is in a no-voltage condition.

Deviations in the voltage, frequency, curve shape and/or symmetry of the line feed increase the heating.
This also affects the electromagnetic compatibility.

Before starting work, make sure that a protective conductor is securely connected.

Note

Pre-assembled conductors may only be used with fixed routed at temperatures below -30 °C.

Alternating bends are not allowed at these temperatures.

Connect the motor in such a way that a permanently safe electrical connection is ensured. Wire ends must not protrude. Use matching cable end pieces.

Connect the line voltage, or for converter operation, connect the motor phases of the converter in the terminal box. Arrange the terminal link according to the circuit diagram for star or delta
connection in the terminal box.

If the motor was ordered with a specific connection method, the terminal links are already connected to the terminal board as star or delta connection.

Select the connection cables according to DIN VDE 0100. Take into account the rated current and the plant-specific conditions.

The following required information for connection is specified in the technical data:

- Direction of rotation
- Number and arrangement of the connections
- Circuit / connection of the motor winding.

6.6.2 Terminal box

⚠DANGER

Dangerous voltages

Can result in death, physical injury, or damage to property. Observe the following safety information before connecting-up the machine:

- Only qualified personnel is permitted to work on the machine.
- Only perform work when the machine is stationary.
- Isolate the machine from the power supply and take measures to prevent it being switched back on again. The same applies for auxiliary circuits.
- Check that the machine is in a no-voltage condition.
- If you have loosened terminal blocks, rectifiers and/or similar parts when electrically connecting the motor, then secure these components back in the terminal box. See figure below.

NOTICE

Electrical connections can loosen

Please observe the tightening torques for cable glands, nuts and bolts.

When performing a test run, secure the feather keys without output elements.

NOTICE

Malfunctions

It must be ensured that there are no foreign bodies, dirt or moisture in the terminal box.

The terminal box must be sealed so that dust and water cannot enter.

Seal the terminal box with the original seal. Seal cable entries to the terminal box and other open cable entries with an O-ring or suitable flat gasket.

Do not damage the terminal box or other functional parts inside the terminal box.

Note

For a standard terminal board with 6 terminal studs, the terminal box can be turned 4 x 90 degrees on the terminal base of the stator housing.

The temperature sensor and anti-condensation heating are connected in the terminal box.

Please note that the motor degree of protection is only obtained after correctly connecting and tightening the cable glands and blanking plugs. Seal the thread of the cable glands and sealing plugs with a sealing compound or O-ring when connecting.

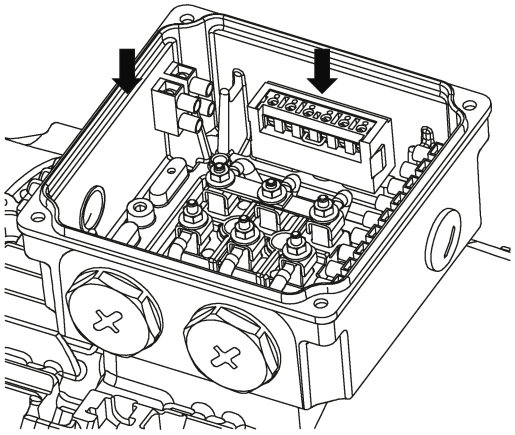

Figure 6-2 Securing in terminal box

6.6.3 Terminal marking

For terminal designations, the following principle definitions apply to three-phase motors:

Table 6- 2 Terminal designations using the example 1U1-1

1	U	1	-	1	Designation
x					Index showing the pole assignment for pole-changing three-phase motors (lower number = lower speed) or, in special cases, for a subdivided winding
	x				Phase designation (U, V, W)
		x			Index showing winding start (1) Index showing winding end (2) Additional indexes if there is more than one connection per winding
				x	Additional indices if it is obligatory to connect parallel line feeder cables to several terminals with otherwise identical designations

6.6.4 Direction of rotation

The motors are suitable for clockwise and counter-clockwise rotation.

When the line feeder cables are connected in the phase sequence L1, L2, L3 to U, V, W the motor rotates clockwise when looking at the drive end of the shaft extension (DE). If two of the connections are swapped, the resulting direction of rotation is counter-clockwise, for example, L1, L2, L3 to V, U, W.

In the case of geared motors intended for only one direction of rotation, for example, with backstop, the prescribed direction of rotation is marked by a direction arrow on the geared motor.

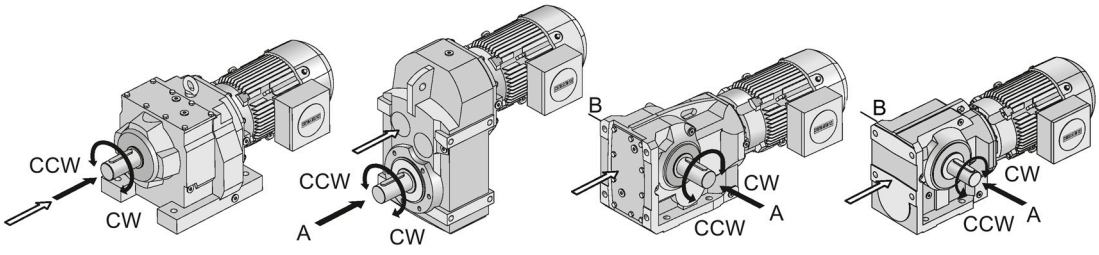

→ View in relation to the output shaft

⇒ View in relation to the drive shaft / motor shaft

Figure 6-3 Direction of rotation

Table 6- 3 Direction of rotation of the geared motor with a view of the output shaft

Gearbox type	**View of**	**Direction of rotation**	
		Output shaft	**Drive shaft**
Z	Output shaft	Right	Right
D			Left
FZ			Right
FD			Left
B	A of the output shaft		Right
	B of the output shaft		Left
K	A of the output shaft		Left
	B of the output shaft		Left
C	A of the output shaft		Right
	B of the output shaft		Left

6.6.5 Connecting the cables in the terminal box

Note

Direct contact between the cable lug surfaces and the contact nuts ensures that the connection can carry current.

In the case of terminals with terminal clamps, distribute the conductors in such a way that the clamping heights are about the same on both sides of the fillet. This method of connection requires a single conductor to be bent into a U shape or connected with a cable lug. The same applies to the inner and outer terminals of the ground conductor.

Select the cable lug size according to the required cable cross-section and stud size. A sloped / angular arrangement is permitted if the required clearances and creepage distances are maintained.

Remove the insulation from the conductor ends so that the remaining insulation is almost long enough to reach the cable lug.

6.6.6 External grounding

Ensure the following when making connections:

- The connecting surface must be bare. Protect the surface against corrosion with a suitable substance, for example acid-free Vaseline.
- Insert the cable lug between the contact bracket and the grounding bracket. Do not remove the contact bracket which is pressed into the housing.
- Place the spring washer under the bolt head.
- Observe the tightening torque for the locking screw, see Installation and routine (Page 47).

Table 6- 4 Maximum conductor connection of the external grounding

Motor size	Thread size
63 ... 90	M4
100 ... 112	M5
132 ... 180	M6
200	2 x M6
225, 250	2 x M8

6.6.7 Installation and routine

Note

Match the screw connection to the connection cable used:

- Seal insert
- Armor
- Braid
- Shielding

Screw the screw connection into the housing. Or secure the screw connection with a locknut.

Terminal board connection

Table 6- 5 Tightening torque for terminal board connection

Thread size	Tightening torque		Thread size	Tightening torque	
	Min.	Max.		Min.	Max.
	[Nm]	[Nm]		[Nm]	[Nm]
M4	0.8	1.2	M10	9	13
M5	1.8	2.5	M12	14	20
M6	2.7	4	M16	27	40
M8	5.5	8	-	-	-

Type of conductor connection

<table>
<tr><td colspan="3">Angle DIN cable lug down for connection. DIN 46234</td><td>Conductor cross section</td></tr>
<tr><td colspan="3">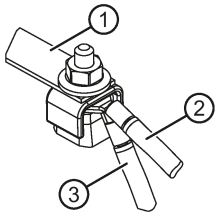
</td><td>... 25 mm²</td></tr>
<tr><td colspan="4">Connecting an individual conductor with terminal clamp.</td></tr>
<tr><td>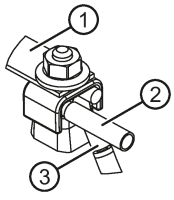
</td><td>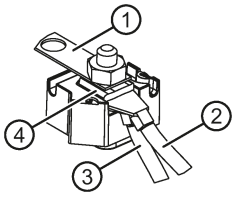
</td><td>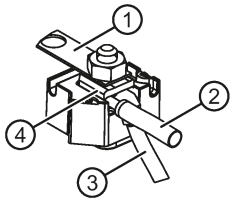
</td><td>... 10 mm²</td></tr>
</table>

Connecting two conductors of approximately the same thickness with terminal clamp.	
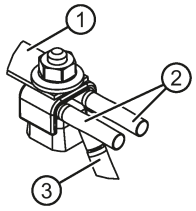	... 25 mm²

① Link rail

② Line connecting cable

③ Motor connecting cable

④ Cover washer

Grounding connection type

Connecting an individual conductor under the external grounding bracket.	Conductor cross section
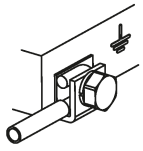	... 10 mm²
Connect with a DIN cable lug under the external grounding bracket DIN 46234.	
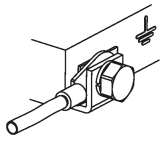	... 25 mm²

Cable gland

NOTICE
Damage to the cable jacket An excessively high tightening torque with a different cable jacket material will damage the cable jacket. When different cable jacket materials are used, apply a lower tightening torque.

For metal or plastic cable glands, please use the following tightening torques for direct mounting. The O-ring cross-section is 2 mm.

Table 6- 6 Tightening torque for cable glands and blanking plugs

Thread size	**Tightening torque ±10%**		**Thread size**	**Tightening torque ±10%**	
	Metal	**Plastic**		**Metal**	**Plastic**
	[Nm]	**[Nm]**		**[Nm]**	**[Nm]**
M12 x 1.5	8	1.5	M32 x 1.5	18	6
M16 x 1.5	10	2	M40 x 1.5		
M20 x 1.5	12	4	M50 x 1.5	20	
M25 x 1.5			M63 x 1.5		

6.6.8 External fan (optional)

Please note the direction of rotation. The direction of rotation is indicated by an arrow on the external fan.

Connect up the external fan according to the applicable circuit diagram.

Before commissioning the motor, check that the external fan is working properly.

The external fan must be switched on during motor operation.

After the motor has been switched off, the external fan must continue to run, depending on the temperature.

Circuit diagrams of the external fan

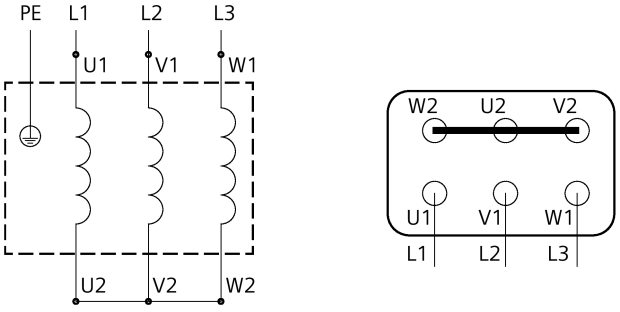

Figure 6-4 Star connection

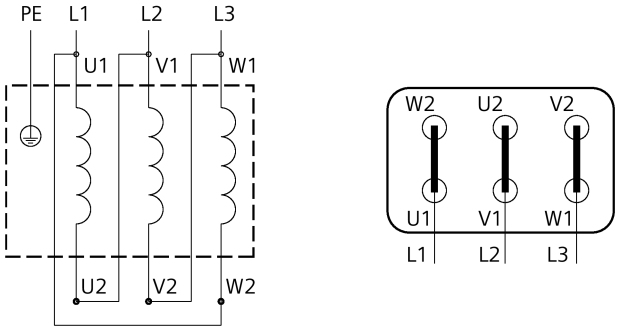

Figure 6-5 Delta connection

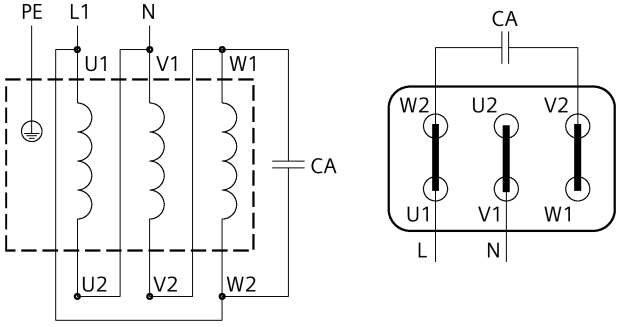

Figure 6-6 Steinmetz delta connection

U1 (T1)	Black	V1 (T2)	Light blue	W1 (T3)	Brown
U2 (T4)	Green	V2 (T5)	White	W2 (T6)	Yellow

For more information about the technical specifications of the external fan, refer to the SIMOGEAR Catalog D50.2 (https://support.industry.siemens.com/cs/cn/en/view/109779885).

6.7 Operation on the converter

Permissible voltage stress

NOTICE
Damage to the motor insulation The motor insulation will be damaged by impermissible voltage peaks produced by converters without an output filter. Reduce the maximum motor voltage to noncritical values by using an output filter on the converter.

The table below shows the maximum admissible peak-peak voltage at the motor terminal as stipulated by DIN EN 60034-18-41.

	Line voltage U_N
	480 V
	IVIC B
$\hat{U}_{phase\text{-}to\text{-}ground}$	1600
$\hat{U}_{phase\text{-}to\text{-}phase}$	2300

The following applies for the voltage rise time: $T_a > 0.3 \pm 0.2$ µs.

The voltages specified are peak-peak values (Vpk/pk).

Bearing currents

Additional bearing currents due to steep voltage edges when switching. Without output filters, significant voltage variations can occur at the winding terminals. Make sure the drive system is installed in accordance with EMC requirements.

Mechanical stress and grease lifetime

High speeds that exceed the rated speed and the resulting increased vibrations alter the mechanical running smoothness and the bearings are subjected to increased stress. This reduces the service life of the grease and bearings.

Optional add-on units

Connect the temperature sensor of the monitoring system and the anti-condensation heating according to the appropriate circuit diagram. Only switch on the anti-condensation heating after the motor has been switched off.

Commissioning 7

7.1 Checking the insulation resistance

Only qualified personnel may work on power installations.

⚠WARNING

Unintentional starting of the drive component

Secure the drive component to prevent it from being started up unintentionally.

Attach a warning notice to the start switch.

⚠WARNING

Hazardous voltage and rotating parts

Before starting commissioning, mount the covers required for the correct air guidance, and prevent contact with active / current-carrying or rotating parts.

⚠WARNING

Hazardous voltage at the terminals

In some cases, the terminals can be at hazardous voltage levels during the measurement and immediately afterwards. The terminals must not be touched.

Carry out a check on the power cables connected to ensure that no voltage can be applied.

Note

The insulation resistance must be checked before commissioning and after lengthy periods of storage or non-use.

Before you begin measuring the insulation resistance, please read the operating manual for the insulation resistance meter you are going to use. Before measuring the insulation resistance, disconnect any main circuit cables that are connected to the terminals.

Note

If the critical insulation resistance is less than or equal to this value, the windings must be dried or, if the fan is removed, cleaned thoroughly and dried.

Note that the insulation resistance of dried, clean windings is lower than that of warm windings. The insulation resistance can only be properly assessed after conversion to the reference temperature of +25 °C.

If the measured value is close to the critical value, you must check the insulation resistance at suitably frequent intervals.

Measure the minimum insulation resistance of the winding to the motor housing at a winding temperature between +20 °C and +30 °C. Other insulation resistance values apply to temperatures outside this range. When making the measurement, wait until the final resistance value is reached, approximately 1 minute.

Measure the critical insulation resistance at the operating temperature of the winding.

Limit values

The following limit values are valid for the insulation resistance at a rated voltage of U_N < 2 kV and a winding temperature of +25 °C.

500 V	Measuring circuit voltage
10 MΩ	Minimum insulation resistance for new, cleaned or repaired windings
0.5 MΩ / kV	Critical specific insulation resistance after a long operating time

Observe the following:

- If you measure a winding temperature other than +25 °C, convert the measured value to the reference temperature +25 °C. The insulation resistance is halved for every 10 K increase in temperature, and it is doubled for every 10 K decrease in temperature.
- If the insulation resistance is close to or below the minimum value, the cause could be humidity and dirt accumulation. Dry the windings.
- During operation, the insulation resistance of the windings can fall to the critical insulation resistance due to ambient and operational influences. To calculate the critical insulation resistance value for a winding temperature of +25 °C, multiply the rated voltage kV by the specific critical resistance value (0.5 MΩ / kV). Example: rated voltage U_N 690 V: 690 V x 0.5 MΩ / kV = 0.345 MΩ.

7.2 Commissioning the motor

Note

Protect the motor against overload.

Do not exceed or undershoot limit speeds, for example, during operation with a backstop.

Note

With a backstop:

Running in the wrong direction of rotation can damage the geared motor.

Check the direction of rotation before commissioning.

Manually rotate the drive end or motor.

Use the phase sequence to check the direction of motor rotation and swap the two external conductors if necessary.

Note

With a brake with manual release:

No braking effect when the manual brake release lever is locked. The brake is then permanently released.

Before commissioning the geared motor, ensure that the brake is not locked.

Unscrew the manual brake release lever and keep it separate from the geared motor.

Note

When starting/prior to switching on, use circuitry to ensure that the motor brake is vented.

Note

With a brake motor:

After maintenance work, check the constancy of the rated air gap of the brake. The brake motor must be current-free. Check the gap between the armature disk and the solenoid at three points with a feeler gauge.

Note

Additional tests are also required, depending on the particular plant-specific situation.

After checking and ensuring the following items, you can start commissioning the motor:

- Compare the details on the rating plate with the operating conditions.
- Compare the voltage and frequency of the motor with the line supply values.
- Check the direction of rotation.
- A Y / Δ start is switched from star to delta when the starting current of the star stage has decayed.
- Check that the electrical connections are fixed securely.
- Check all the touch protection measures for both moving and live parts.
- Check that the monitoring instruments are connected and set correctly.
- Check the coolant temperature.
- Check any supplementary equipment being used.
- Check that air inlet ports and cooling surfaces are clean.
- Check the clearances from the geared motor to adjacent components, see Installation conditions for the motor (Page 41).
- Create the appropriate connections for grounding and equipotential bonding.
- Properly mount and fix the motor.
- Check that the ventilation is not impeded and that the discharged air - including that from adjacent units - cannot be drawn back in.
- Check the belt tension if a belt drive is being used.
- Seal the terminal box cover and seal the cable entries.

Operation

8

⚠ CAUTION
Malfunctions can cause personal injuries or motor damage In the event of changes during operation, the drive component must be switched off immediately. Determine the cause of the fault using the fault table (Page 59). Remedy faults or have faults remedied.

Check the motor during operation for:

- Excessive operating temperature
- Smooth and vibration-free operation
- Unusual noises

Maximum speeds for converter operation

In continuous operation, the speed must be less than the maximum permissible speed, as the shaft sealing rings are subject to higher stress levels and therefore the service life is reduced. Shaft sealing rings are parts that are subject to wear and must be checked and maintained.

The maximum speed stamped on the rating plate is obtained from the following properties:

- Maximum permissible mechanical speed of the gearbox
- Maximum permissible speed of the motor
- Maximum permissible speed of the encoder (if an encoder is being used)
- Maximum permissible speed of the motor brake (if a motor brake is being used)

Contact Technical Support when the motor is frequently operated close to its maximum speed.

Maximum torques

Do not exceed the maximum gearbox output torque. For special applications, for example:

- Tandem gearbox
- Gearboxes with high transmission ratios
- For service factors less than 1
- For unfavorable operating situations (high surge loads/shock, frequency of operation or when operated on a daily basis)

Ensure that the motor power is reduced corresponding to the maximum output torque at the gearbox.

Faults, causes and remedies

9

Note

Faults and malfunctions that occur during the warranty period and requiring repair work on the motor may only be remedied by Technical Support. If faults occur without a clearly identifiable cause, Siemens AG recommends using the services of the Technical Support after the warranty period has elapsed.

If you need the help of the Technical Support, please have the following information ready:

- Rating plate data
- Nature and extent of the fault
- Suspected cause

Table 9- 1 Faults, causes and remedies

Faults	Causes	Remedy
Bearing overheated	Too much grease in the bearing	Remove excess grease
	Bearing contaminated	Replace bearing
	Belt tension too high	Reduce belt tension
	Coupling forces pull or push	Align the motor precisely, correct the coupling
	Coolant temperature outside the permissible range.	Adjust the cooling air to the right temperature
	The bearing grease has a dark color	Check for bearing currents
	Not enough grease in the bearing	Lubricate as prescribed by the manufacturer
	Incorrect motor installation	Check the motor type of construction
Bearing noise	Not enough grease in the bearing	Lubricate as prescribed by the manufacturer
	Incorrect motor installation	Check the motor type of construction
	Brinelling on the inner ring of the bearing, for example, caused when the motor starts with a locked bearing	Replace bearing, prevent vibration when motor is stationary
Motor running unevenly	Coupling forces pull or push	Align the motor precisely, correct the coupling
	Incorrect motor installation	Check the motor type of construction
	Out of balance due to belt pulley or coupling	Balance precisely
	Motor mounting too weak	Check the mounting

Faults	Causes	Remedy
Motor does not ramp up	Counter torque too high	Check the motor torque and the load torque
	Line voltage too low	Check line conditions
	Phase interruption	Check the line connection
	Circuitry incorrect	Observe the circuit diagram and rating plate
Motor overheated	Circuitry incorrect	Observe the circuit diagram and rating plate
	Overload	Compare data on the rating plate
	Switching frequency too high	Observe the rated duty
	Insufficient ventilation	Check the cooling air ducts, check the direction of rotation
	Cooling air ducts contaminated	Clean cooling air ducts
	Coolant temperature out of the permissible range	Adjust the cooling air to the right temperature
Significant drop in speed	Counter torque too high	Check the motor torque and the load torque
	Line voltage too low	Check line conditions
	Phase interruption	Check the line connection
	Circuitry incorrect	Observe the circuit diagram and rating plate
	Overload	Compare data on the rating plate
Protective equipment trips	Phase interruption	Check the line connection
	Circuitry incorrect	Observe the circuit diagram and rating plate
	Overload	Compare data on the rating plate
	Switching frequency too high	Observe the rated duty
	Winding and terminal short-circuit	Measure the insulation resistance
	Startup time is exceeded	Check the power-up conditions

Service and maintenance 10

10.1 General notes about maintenance

⚠ WARNING
Unintentional starting of the drive component
Secure the drive component to prevent it from being started up unintentionally.
Attach a warning notice to the start switch.

NOTICE
Improper maintenance
Only authorized qualified personnel may perform the maintenance and servicing. Only original parts supplied by Siemens AG may be installed.

Only qualified personnel may perform the inspection, maintenance and servicing work. Note the information in the Specific safety instructions (Page 25).

10.2 Locking the manual release of the brake (optional)

⚠ WARNING
Personal injuries and material damage caused by a locked brake
No braking effect when the manual brake release lever is locked. The brake is then permanently released.
Before commissioning the geared motor, ensure that the brake can be applied.
Unscrew the manual brake release lever and keep it separate from the geared motor.

Keep the lockable manual release in the released state for maintenance work.

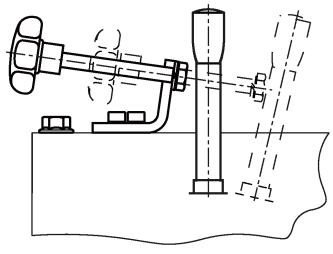

Figure 10-1 Lockable manual release

Locking the manual brake release lever

1. Screw on the manual brake release lever.
2. Bring the manual brake release lever into the position in which the brake is released.
3. Tighten the locking screw far enough so that the manual brake release lever cannot return to the unreleased position.

You have released the brake.

Releasing the lock

1. Unscrew the locking screw far enough so that the brake completely returns to the unreleased position. The gap between the locking screw and the manual brake release lever should be 2 to 5 mm.
2. Unscrew the manual brake release lever and keep the lever separately from the geared motor.

You have ensured that the manual brake release is no longer locked.

10.3 Lubrication

The standard version of the motors bearings are permanently lubricated (2Z bearings) and cannot be relubricated. If this is not the case, this is indicated by a warning notice on the motor.

The specified grease service life values are valid for an ambient temperature of up to a maximum of +40 °C. For every 10 °C increase in temperature, the grease service life is reduced by a factor of 0.7 of the value in the table (maximum +20 °C = factor 0.5).

At an ambient temperature of +25 °C, the grease service life can be expected to be doubled.

For versions with closed bearings (2Z bearings), replace the bearings after 3 to 4 years. For options with open bearings (1Z bearing: special greases, food, organic grease) replace the grease after 3 to 4 years independent of the operating hours.

Table 10- 1 Roller-bearing and shaft-sealing-ring grease

Fields of application	Ambient temperature	Type
Standard	-20 °C to +60 °C	Fuchs Renolit FWA 160
	-40 °C to +80 °C	Klueber Petamo GHY 133H
Foodstuff-compatible for the food industry	-30 °C to +60 °C	FUCHS CASSIDA GREASE EPS 2
Biologically degradable, for agriculture, forestry and water industries	-35 °C to +60 °C	Plantogel 2 S

Horizontal mounting position (IM B.)

Table 10- 2 Grease service life in operating hours [h] with permanent lubrication

Size	Motor speed n_N [rpm]						Grease quantity in the bearing	
	3600	3000	1800	1500	1200	≤ 1000	D-end	ND-end
	Operating hours [h]						[g]	
63	33000	33000	33000	33000	33000	33000	7	5
71							7	5
80							9	9
90							15	11
100	24000						20	15
112							45	25
132		24000					75	50
160	17000						90	70
180							110	80
200								90
225, 250	Grease service live = bearing service life							

Vertical mounting position (IM V.)

Table 10- 3 Grease service life in operating hours [h] with permanent lubrication

Size	Motor speed n_N [rpm]						Grease quantity in the bearing	
	3600	3000	1800	1500	1200	≤ 1000	D-end	ND-end
	Operating hours [h]						[g]	
63	24000	33000	33000	33000	33000	33000	9	9
71								
80		24000						
90							15	11
100	17000						20	15
112		17000	24000				45	25
132	12000			24000			75	50
160							90	70
180		12000			24000		110	60
200								80
225, 250	Grease service live = bearing service life							

10.4 Cleaning the motor

⚠WARNING

Explosion hazard due to overheating of the machine caused by a layer of dust

Deposits of dust have a thermally insulating effect, which can lead to the machine overheating. The maximum surface temperature of the machine cannot be adhered to. Dust can be ignited causing an explosion. This can result in death, serious injury or material damage.

- Regularly remove dust from the machine.
- Do not allow dust layers thicker than 5 mm to build up.
- Do not switch the machine on until the dust has been completely removed.

NOTICE

Dust deposits cause higher housing temperatures

Dust deposits prevent heat radiation.

Keep the geared motor free from dirt and dust.

NOTICE

Cleaning with a high-pressure cleaning appliance

Water can penetrate into the geared motor. Seals can become damaged.

Do not use a high-pressure cleaning appliance to clean the geared motor.

Do not use tools with sharp edges.

Switch off the power supply to the drive component before cleaning it.

10.5 Checking the tightness of fastening bolts

Note

Replace damaged headless bolts with new bolts of the same type and strength class.

Switch off the power supply to the drive component. Check all fastening bolts for tightness using a torque wrench.

The general tolerance for the tightening torque is 10%. The tightening torque is based on a friction coefficient of μ = 0.14.

Table 10- 4 Tightening torques for fastening bolts

Thread size	Tightening torque for strength class		
	8.8	10.9	12.9
	[Nm]	[Nm]	[Nm]
M4	3	4	5
M5	6	9	10
M6	10	15	18
M8	25	35	41
M10	50	70	85
M12	90	120	145
M16	210	295	355
M20	450	580	690
M24	750	1000	1200
M30	1500	2000	2400
M36	2500	3600	4200

10.6 Inspection of the motor

Check the motor in accordance with the criteria set out in Specific safety instructions (Page 25).

Touch up damaged paintwork carefully.

10.7 Servicing the brake

10.7.1 Wear of the spring-operated brake

The friction lining and the mechanical components of the brake are subject to wear due to their inherent function. For safe and fault-free operation, the brake must be regularly checked and adjusted, and if necessary, replaced.

The following table describes the different causes of wear and their effects on the spring-operated brake components. The important influencing factors must be quantified in order to calculate the service life of the rotor and the brake and determine the stipulated maintenance intervals. Here, the most important factors are the work as a result of the frictional force, the speed at the start of braking and the switching frequency. If several of the listed causes of wear to the friction lining occur at the same time in a single application, the influencing factors must be added together for the wear calculation.

Table 10- 5 Causes of wear to the spring-operated brake

Component	Cause	Effect	Influencing factor
Friction lining	Operational braking	Friction lining wear	Work as a result of the frictional force
	Emergency stops		
	Wear caused by overlap when starting and stopping the geared motor		
	Active braking by the motor supported by the brake (quick stop)		
	Low speed and mounting position 'motor at top'		
	Wear when starting for motor a mounting position with vertical shaft, even when the brake is released		Number of start / stop cycles
Armature disk and flange	Friction of the brake lining	Run-in of armature disk and flange	Work as a result of the frictional force
Braking rotor gear teeth	Relative movement and impacts between rotor and hub	Wear of the teeth (primarily on the rotor side)	Number of start / stop cycles
Support of the armature disk	Load change and impacts in the backlash between the armature disk, sleeve screws and guide pins	Deflection of armature disk, sleeve screws and pins	Number of start / stop cycles, strength of braking torque
Springs	Axial load cycle and shear stresses in the springs due to radial backlash in the armature disk	Decrease in the spring force or fatigue failure	Number of switching operations of the brake

10.7.2 Maintenance intervals for the brake

For safe and trouble-free operation, check and maintain the spring-operated brake at regular intervals.

For operational braking, the maintenance intervals depend on the loading on the brake in the application. Take all causes of wear into account when calculating the maintenance intervals. Siemens AG recommends a regular inspection at fixed time intervals for low loaded brakes, for example holding brakes with an emergency stop.

Failure to maintain the brake can lead to operating faults, production outage or damage to the plant. Specify a maintenance plan for each application that is appropriate to the operating conditions and loading of the brake. The maintenance intervals and maintenance work for the pneumatic brake are listed in the table.

Table 10- 6 Maintenance interval for the brake

Brake	Maintenance interval
Operational brake	According to service life calculation
	Otherwise every six months
	After 4000 operating hours at the latest
Holding brake with emergency stop	Minimum every two years
	After one million cycles at the latest
	Shorter intervals for frequent emergency stops

10.7.3 Adjusting the air gap

⚠ WARNING

Unintentional starting of the drive component

Switch off the power supply to the drive component.

The brake must be in a torque-free condition.

Secure the drive component to prevent it from being started up unintentionally.

Attach a warning notice to the start switch.

⚠ WARNING

Decrease of braking effect due to contamination

Do not allow oil or grease to come into contact with friction surfaces.

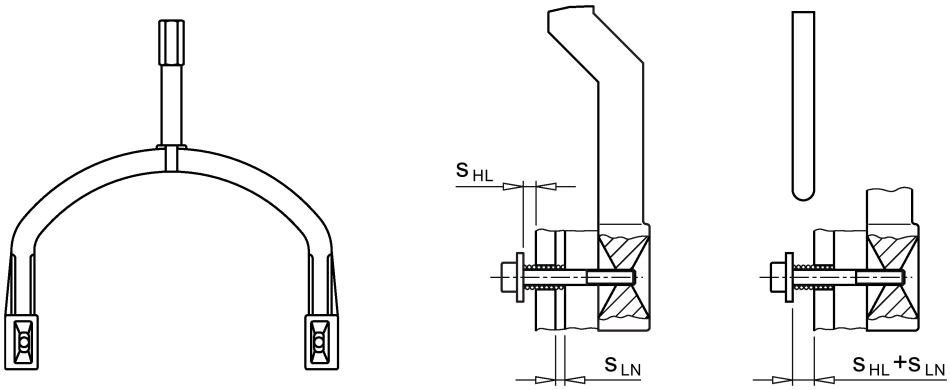

Figure 10-2 Setting dimension for air gap

Procedure

1. Remove the fan cover.
2. Loosen the fastening screws of the brake.
3. Screw the sleeve screws further into the solenoid using an open-ended spanner.
4. Tighten the fastening screws of the brake.
5. Check the air gap s_{LN} in the vicinity of the screws using a feeler gauge.
6. If necessary, correct the air gap s_{LN} and then check it again.
7. When combined with manual brake release:
   Check the setting dimension s_{HL} and correct s_{HL} if necessary.
8. Mount the fan cover.

You have now set the air gap.

Table 10- 7 Air gap values

Brake type	Nominal air gap s_{LN} (+0.1 / -0.05)	Maximum air gap for		Reference gage
		Standard excitation $s_{Lmax.}$	Overexcitation $s_{Lmax.}$	s_{HL}
	[mm]	[mm]	[mm]	[mm]
L4/2	0.2	0.5	0.5	0.8
L4				
L4/5				
L8/5				
L8				
L8/10		0.45	0.45	
L16/8		0.5	0.5	
L16				
L16/20				
L32/14	0.3	0.75	0.75	1.0
L32				
L32/40		0.5	0.5	
L60/25		0.75	0.75	
L60/38				
L60		0.7	0.7	
L80/50		0.75	0.75	
L80				
L80/100		0.5	0.5	
L150/80	0.4	1	1	1.2
L150/100				
L150/125				
L150				
L260/200				
L260				
L260/315		0.95	0.95	
L400/300	0.5	1.2	1.2	2.0
L400				
L400/600		0.75	0.75	
FDX30	0.6	0.6	1.2	2.0

Table 10- 8 Tightening torque for the brake screw

Brake type	Thread size	Tightening torque
Siemens		[Nm]
L4	3 x M4	2.8
L8	3 x M5	5.5
L16	3 x M6	9.5
L32	3 x M6	9.5
L60, L80	3 x M8	23
L150	6 x M8	23
L260, L400	6 x M10	46
FDX30	6 x M10	50

10.7.4 Replacing the friction lining

⚠WARNING

Unintentional starting of the drive component

Switch off the power supply to the drive component.

The brake must be in a torque-free condition.

Secure the drive component to prevent it from being started up unintentionally.

Attach a warning notice to the start switch.

Procedure

1. Remove the fan cover.

   When combined with manual release:
   Unscrew the manual brake release lever.

   With external fan:
   Remove the fan cover together with the external fan.
2. Detach the connection cable.
3. Remove the fan locking ring and pull out the fan.
4. Loosen the brake screws evenly and remove the screws completely. Remove the solenoid.
5. Pull the rotor completely off the hub.
6. Check the teeth on the hub.
7. Check the friction surface on the bearing shield. If there is severe scoring on the friction plate or flange, replace the friction plate or flange. Rework the friction surfaces if there is severe scoring on the bearing shield.
8. Measure the thickness of the new rotor and the head height of the sleeve screws with a caliper gauge.

9. Calculate the gap between the solenoid and the armature disk as follows:
   Gap = rotor thickness + s_{LN} - head height.
10. Unscrew the sleeve screws evenly until the calculated gap between the solenoid and the armature disk is reached.
11. Mount the new rotor and solenoid. Set the air gap of the brake, see Adjusting the air gap (Page 67).
12. Connect the connection cable.
13. Mount the fan cover.

You have now replaced the friction lining of the brake.

Table 10- 9 Brake data

Brake type	Nominal air gap s_{LN} (+0.1 / -0.05)	Minimum rotor thickness	Maximum permissible	
			Operating speed if max. permissible operating energy utilized	No-load speed with emergency stop function
			Normal friction lining	Normal friction lining
	[mm]	[mm]	[rpm]	[rpm]
L4	0.2	4.7	6000	6000
L8		6.4	5000	5000
L16		8.1	4000	4000
L32	0.3	8.4	3600	3600
L60		8.7	3600	3600
L80		8.8	3600	3600
L150	0.4	11.4	3600	3600
L260		12	3600	3600
L400	0.5	15.5	3000	3000
FDX30	0.6	18.5	3000	3000

Disposal

11



Recycling and disposal of SIMOGEAR geared motors

For environmentally friendly recycling and disposal of your old device, please contact a company certified for the disposal of old electrical and/or electronic devices and dispose of the device in accordance with the regulations in your country.

Technical data

12

12.1 Type designation

Table 12- 1 Description of the type designation

Motor type	Energy efficiency	Mode of operation	Digit of article number					
			1	2	3	4	11	12
LHN		S3-75%	2	K	J	4	2	1/2
LHN	IE3						2	3
LEN	IE3						3	3
LJN	IE4						4	4

Table 12- 2 Example of the type designation structure

Example:	**LEN**	**80M**	**4**	**PF -**	**L8 / 5NH -**	**IN**
Motor type	LEN					
Motor size		80				
Number of poles			4			
Special features				PF		
Brake					L8 / 5NH	
Encoder						IN

Table 12- 3 Type designation code

Motor type	
LEN, LHN, LJN	AC induction motor, integrated
Special features	
p	IE3 efficiency class
S	IE4 efficiency class
F	Forced ventilation
I	High inertia fan
W	Canopy
D	Handwheel
X	Backstop
Brake	
L, FDX	Spring-operated single-disk brake, DC excited
16	Size
../20	Adjusted braking torque
N	Standard version
G	Enclosed version
H, HA	Manual brake release, lockable manual brake release
M	Microswitch

Encoder	
IN	Incremental encoder
IR	Resolver
IA	Absolute encoder
IV	Prepared for encoder mounting
IM	Magnetic encoder

12.2 Rating plate data

12.2.1 General technical data

⚠WARNING

Exceeding the power limits

Exceeding the power limits (max. speeds, max. torque etc.) of the gearbox or motor can damage the geared motor.

Maintain the permissible operating ranges and power limits of the motor and gearbox.

The max. speeds and torque shown indicate the mechanical limits of the geared motor. Depending on the application, also take into account thermal limits. In applications with long max. speed components, high pressure build-up may occur in the gearbox, which can cause damage to the gearbox (e.g. leakage).

The most important technical data appears on the rating plate of the gearboxes and geared motors.

This data, together with the contractual agreements for the geared motors, determines the limits of intended use.

In the case of geared motors, a rating plate attached to the motor usually indicates the data for the entire drive.

In certain cases, separate rating plates are attached to the gearbox and the motor. Maintain the operating ranges and power limits on all rating plates.

The degree of protection according to EN 60034-5 (IEC 60034-5) specified on the nameplates only applies to the motor of the unit.

When selecting higher degrees of protection, also take into consideration the equipping on the gearbox side (seals, vents).

12.2.2 Rating plate SIMOGEAR geared motors

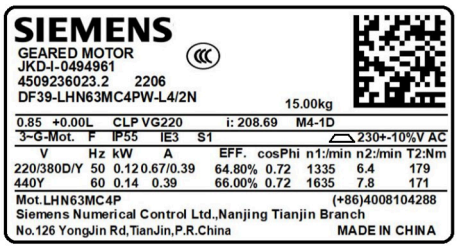

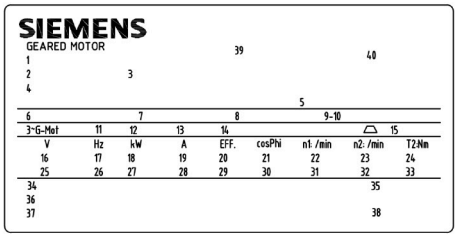

1 Serial number
2 Purchase order number
3 Year of manufacture
4 Type designation
5 Weight
6 Oil quantity
7 Oil type
8 Total transmission ratio
9 Mounting position
10 Terminal box position
11 Insulating class
12 Degree of protection
13 IE class
14 Duty cycle
15 Brake voltage

Frequency 1

16 Rated voltage
17 Rated frequency
18 Rated power
19 Rated current
20 Motor efficiency
21 Power factor
22 Input speed
23 Output speed
24 Output torque

Frequency 2

25 Rated voltage
26 Rated frequency
27 Rated power
28 Rated current
29 Motor efficiency
30 Power factor
31 Input speed
32 Output speed
33 Output torque
34 Article number
35 Hotline
36 Manufacturer
37 Manufacturer's address
38 Country of origin

12.3 Weight

The weight of the entire geared motor is given in the shipping papers.

The weight is stated on the rating plate of the motor, gearbox or geared motor.

The weight specification refers only to the product in the delivery state.

12.4 Circuit diagrams

The circuit diagrams include the information about:

- Assembling the connections
- Motor connection
- Use in electric circuit diagrams

The circuit diagrams are placed in the terminal box and supplied with the motor.

Table 12- 4 Example of the circuit diagram numbering

Example:	**A**	**0**	**100**	**000**
1st position	A			
2nd position		0		
3rd position			100	
4th position				000

Table 12- 5 Explanation

1st position	Identification letter for circuit diagrams
2nd position	Marking for the connection type: 0: Standard connection at the terminal board (motor), terminal block (auxiliary connections) 1: Standard connection at the connector box
3rd position	Identification for the circuit diagram content
4th position	Consecutive number for additional versions

Modular structure of the circuit diagrams

The circuit diagrams have a modular structure and have been simplified.

Table 12- 6 Structure of the circuit diagrams

Supplementary device	**Terminal marking**	**Supplementary device**	**Terminal marking**	**Terminal numbering**	**Designation**	**Function**
Europe	**Europe**	**Nema**	**Nema**			
1TP	1TP1; 1TP2	P	P1; P2	01; 02	Temperature monitor motor winding	Temperature monitor line disconnection in case of option PTC thermistor for warning and disconnection
1TB	1TB1; 1TB2	P	P3; P4	03; 04	Temperature monitor motor winding	Temperature monitor line disconnection in case of option WT for warning and disconnection
1BD	1BD1; 1BD2	B	B1; B2	05; 06	Brake control	DC connection, brake

Supplementary device	Terminal marking	Supplementary device	Terminal marking	Terminal numbering	Designation	Function
Europe	**Europe**	**Nema**	**Nema**			
1BA	1BA1; 1BA2	B	B3; B4	07; 08	Brake control	AC voltage connection, brake rectifier
1S	1S1; 1S2	B	B5; B6	09; 10	Brake control	Jumper, DC circuit, brake rectifier
2TP	2TP1; 2TP2	P	P1; P2	01; 02	Temperature monitor motor winding	Temperature monitor line disconnection in case of option PTC thermistor for disconnection
2TB	2TB1; 2TB2	P	P3; P4	03; 04	Temperature monitor motor winding	Temperature monitor line disconnection in case of option WT for disconnection
1HE	1HE1; 1HE2	H	H1; H2	15; 16	Heater	Standstill heater, motor
3TP	3TP1; 3TP2	P	P9; P10	17; 18	Temperature monitor motor winding	Temperature monitor line warning in case of option PTC thermistor for warning and disconnection
3TB	3TB1; 3TB2	P	P11; P12	19; 20	Temperature monitor motor winding	Temperature monitor line warning in case of option WT for warning and disconnection
1R	+1R1; -1R2	P	P19; P20	27; 28	Temperature monitor motor winding	Temperature sensor KTY 84-130
1R	R1; 1R2	P	P25; P26	57; 58	Temperature monitor motor winding	1 PT100 resistance thermometer
1R	1R1; 1R2	P	P27; P28	95; 96	Temperature monitor motor winding	PT1000 resistance thermometer
2S	2S1; 2S2; 2S3	-	-	32; 33; 34	Brake control	Release monitoring, brake
3S	3S1; 3S2; 3S3	-	-	35; 36; 37	Brake control	Brake wear monitoring
8BA	8BA1; 8BA2; 1BD1; 1BD2; 1I1; 1I2	B	B44; B45; B1; B2; I1; I2	86; 87; 05; 06; 71; 72	Brake control	High-speed rectifier with current sensing and arc quenching element for disconnection on DC side
9BA	9BA1; 9BA2; 1BD1; 1BD2	B	B48; B49; B1; B2	88; 89; 05; 06	Brake control	High-speed rectifier with voltage sensing and arc quenching element for disconnection on DC side
7R	7R1; 7R2.1; 7R2.2	P	P29; P30.1; P30.2	97; 98.1; 98.2	Temperature monitor gearbox	Resistance thermometer 1 PT100 oil sensor

Spare parts

13

13.1 Stocking of spare parts

By stocking the most important spare parts and wearing parts on site, you can ensure that the gearboxes or geared motors are ready for use at any time.

NOTICE
Safety impairment caused by inferior products The installation or use of inferior products can have a negative impact on the design characteristics of the geared motor and might consequently impair the active or passive safety features of the machine. Siemens AG states explicitly that only spare parts and optional components supplied by Siemens have been tested and approved by Siemens. If you do not use original spare parts and optional components, Siemens AG excludes every liability and warranty. Siemens AG accepts the warranty only for original spare parts.

Note that special manufacturing and delivery specifications often apply to individual components. All spare parts offered by Siemens AG are state-of-the-art and conform to the latest legal regulations.

Please state the following data when ordering spare parts:

- Purchase order number shown on the rating plate 2
- Type designation shown on the rating plate 4
- Part number
  - 4-digit item number from the spare parts list
- Quantity

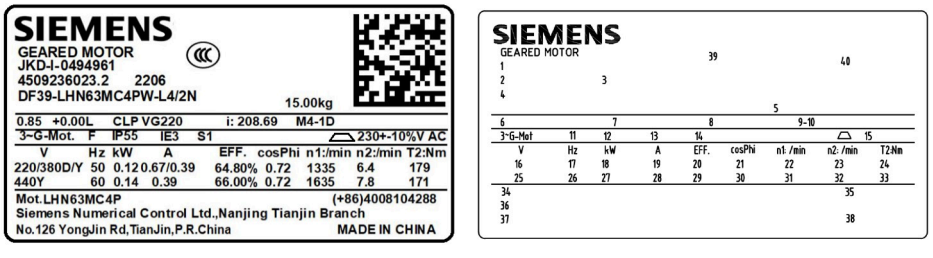

Figure 13-1 Example of a SIMOGEAR rating plate

For motors with their own rating plate, the spare parts documentation in the original operating instructions applies.

13.2 Spares on Web

Rapid support around the clock – our SIMOGEAR service

Our service is your partner for comprehensive support and innovative services for increasing your productivity. The original parts and manufacturing expertise we offer help you achieve maximum machine availability and productivity. Our proven services therefore contribute to reducing the total cost of ownership for you, as well as to creating sustainable values and solutions.

The technical product lists are provided in Spares on Web (https://www.sow.siemens.com/?lang=en).



Figure 13-2 Enter a sample article and serial number in Spares on Web

Procedure

1. Open the spare parts list with the link provided.
2. In the field "Serial number", enter the production number starting with JKD on the rating plate.
3. Use the "Search" function to display the spare parts list and technical agreement.

You have opened the spare parts list through Spares on Web.

13.3 Lists of spare parts

13.3.1 Motor sizes 63 - 90

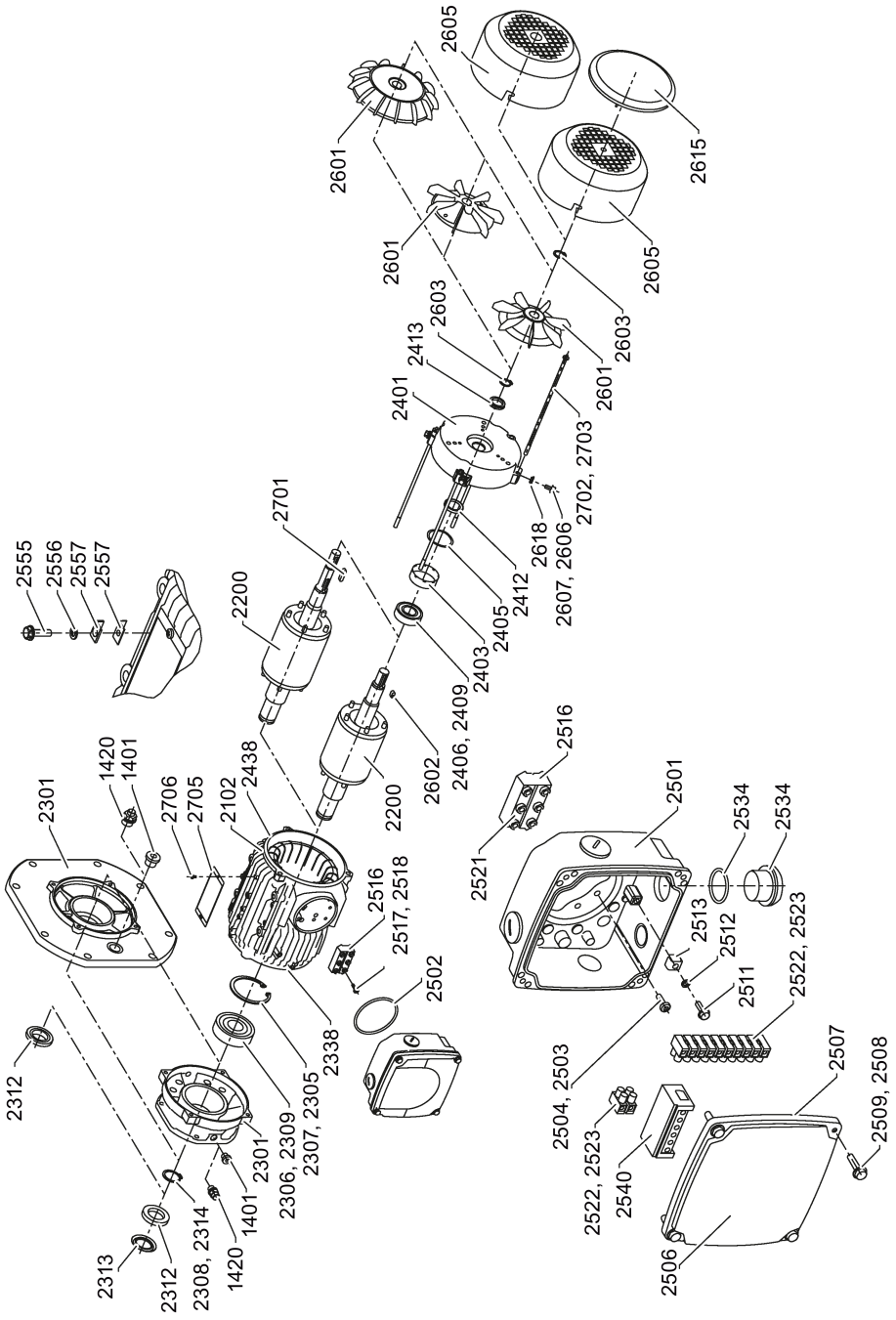

Figure 13-3 Motor sizes 63 - 90

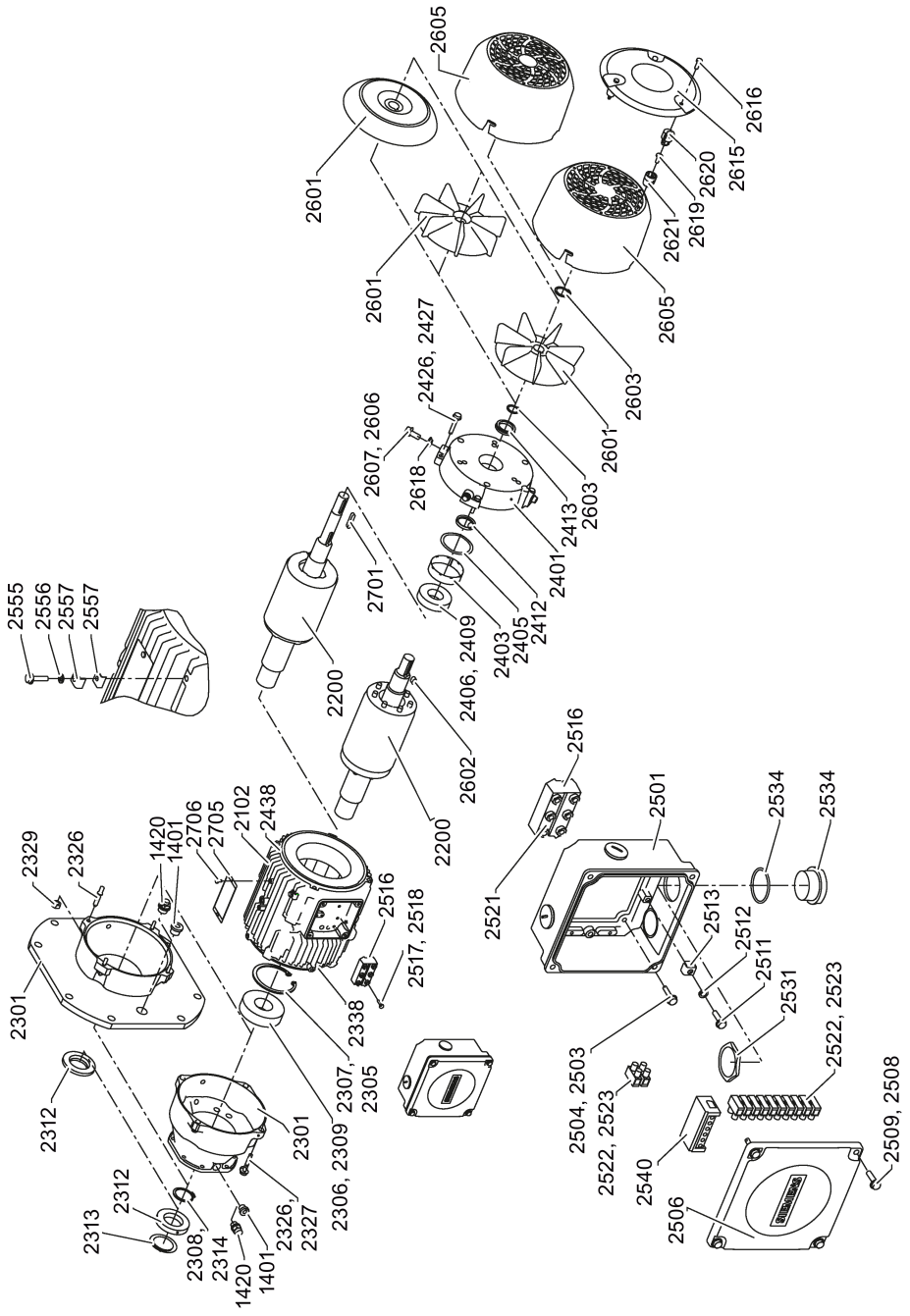

Figure 13-4 Motor sizes 100 - 160

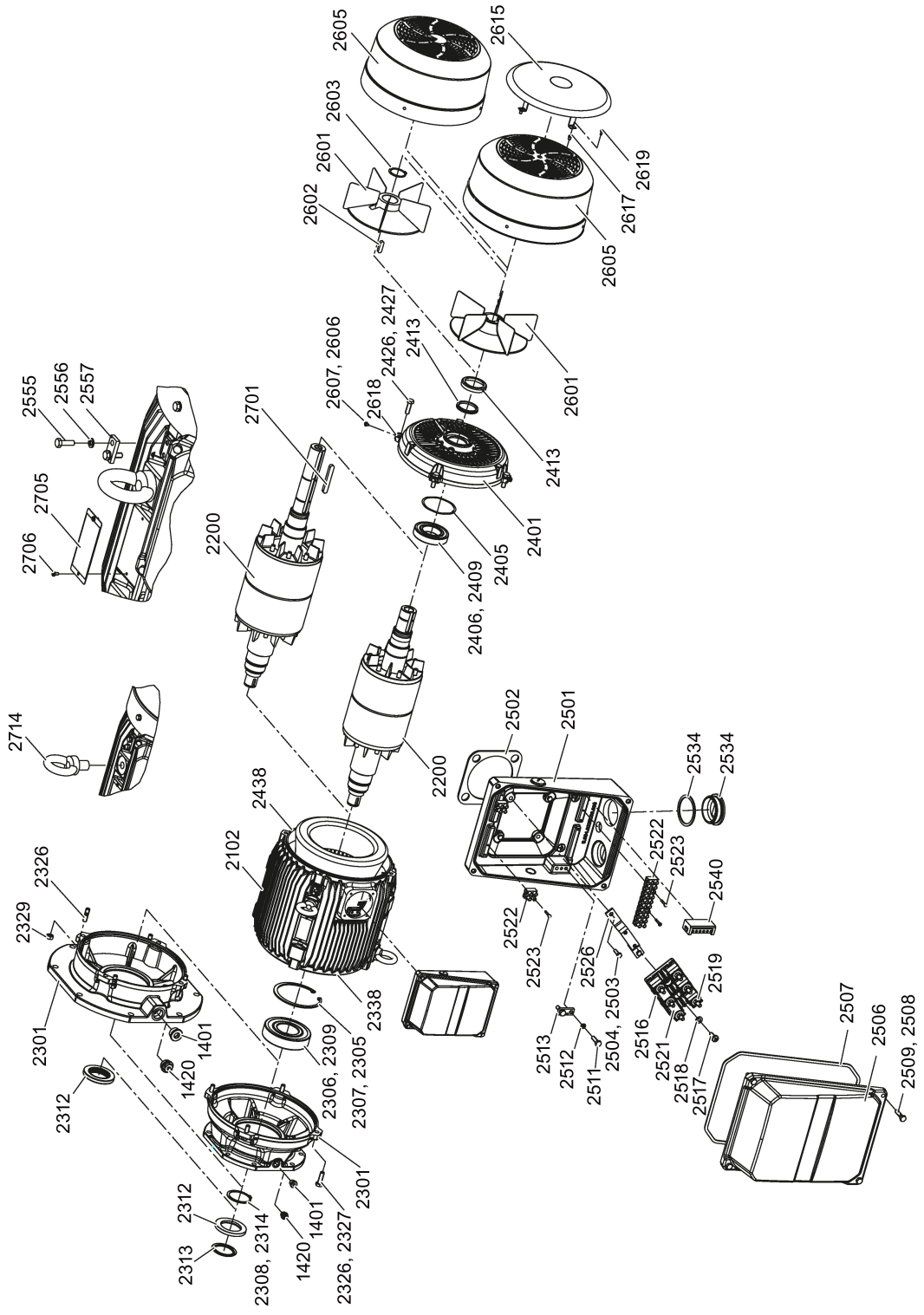

Figure 13-5 Motor sizes 180 - 250

Spare parts list for motor sizes 63 - 250

1401 Screw plug
1420 Vent filter
2102 Stator
2200 Rotor
2301 Bearing shield
2305 Shim
2306 Bearing
2307 Locking ring
2308 Locking ring
2309 Grease
2312 Shaft sealing ring
2313 Oil splasher
2314 Shim
2326 Bolt
2327 Screw lock
2329 Nut
2338 Seal
2401 Bearing shield
2403 Spring band
2405 Spring washer
2406 Bearing
2409 Grease
2412 Shaft sealing ring
2413 V ring
2426 Bolt
2427 Screw lock
2438 Seal
2501 Lower terminal box section
2502 Seal
2503 Screw lock
2504 Bolt
2506 Terminal box cover
2507 Seal
2508 Screw lock
2509 Bolt
2511 Bolt
2512 Screw lock
2513 Bracket
2516 Complete terminal board
2517 Bolt
2518 Screw lock
2519 Nut
2521 Terminal connector
2522 Terminal block
2523 Bolt
2526 Mounting plate
2531 Nut
2534 Screw plug complete
2540 Rectifier
2555 Bolt
2556 Screw lock
2557 Bracket
2601 Fan blade
2602 Tolerance ring
2603 Locking ring
2605 Fan cover
2606 Screw lock
2607 Bolt
2615 Protective canopy
2616 Bolt
2617 Riveting nut
2618 Damping disk
2619 Bolt
2620 Spacer / bush
2621 Spacer / bush
2701 Featherkey
2702 Bolt
2703 Screw lock
2705 Rating plate
2706 Bolt
2714 Eyebolt

13.3.2 Brake

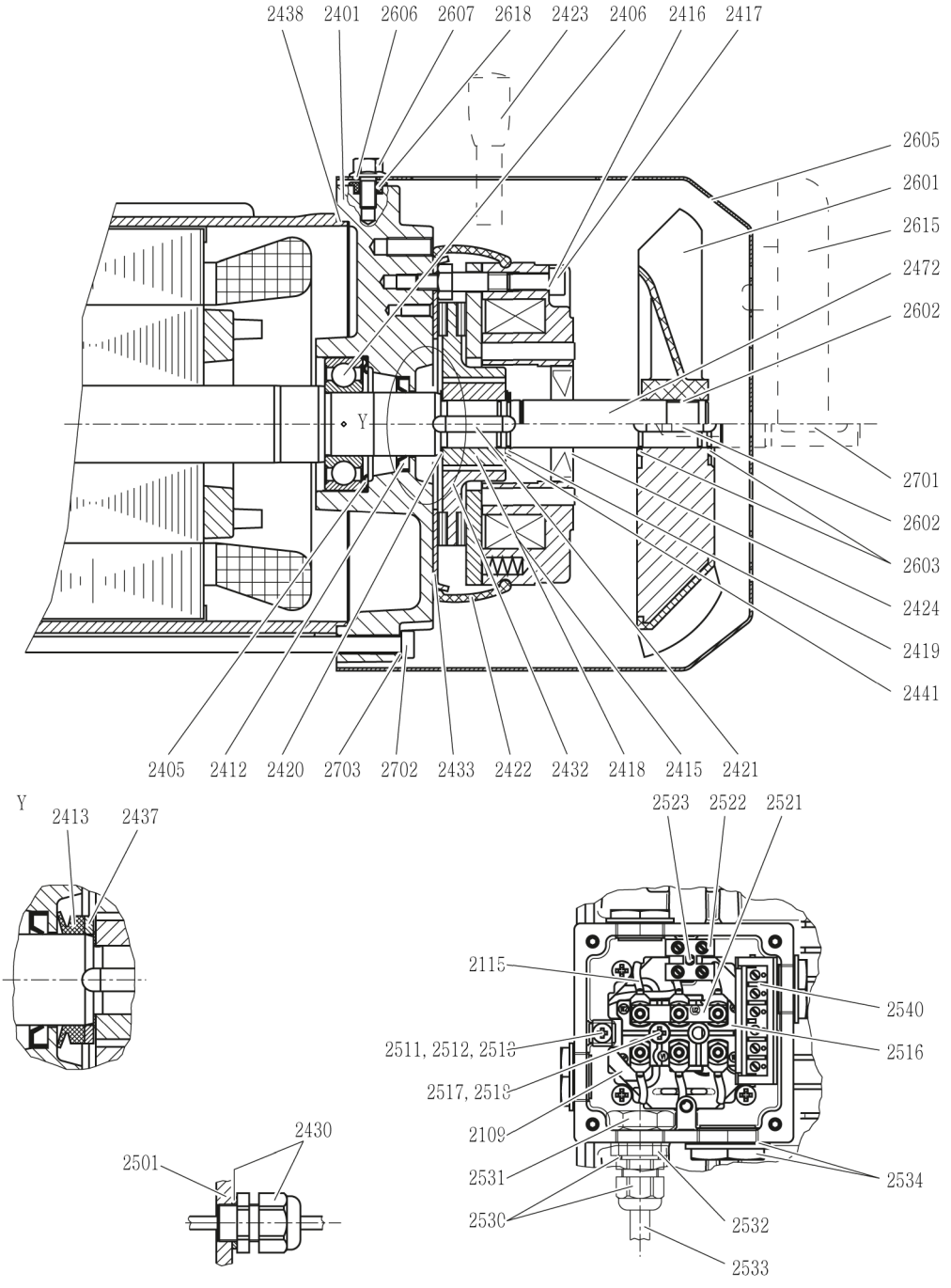

Figure 13-6 L brake

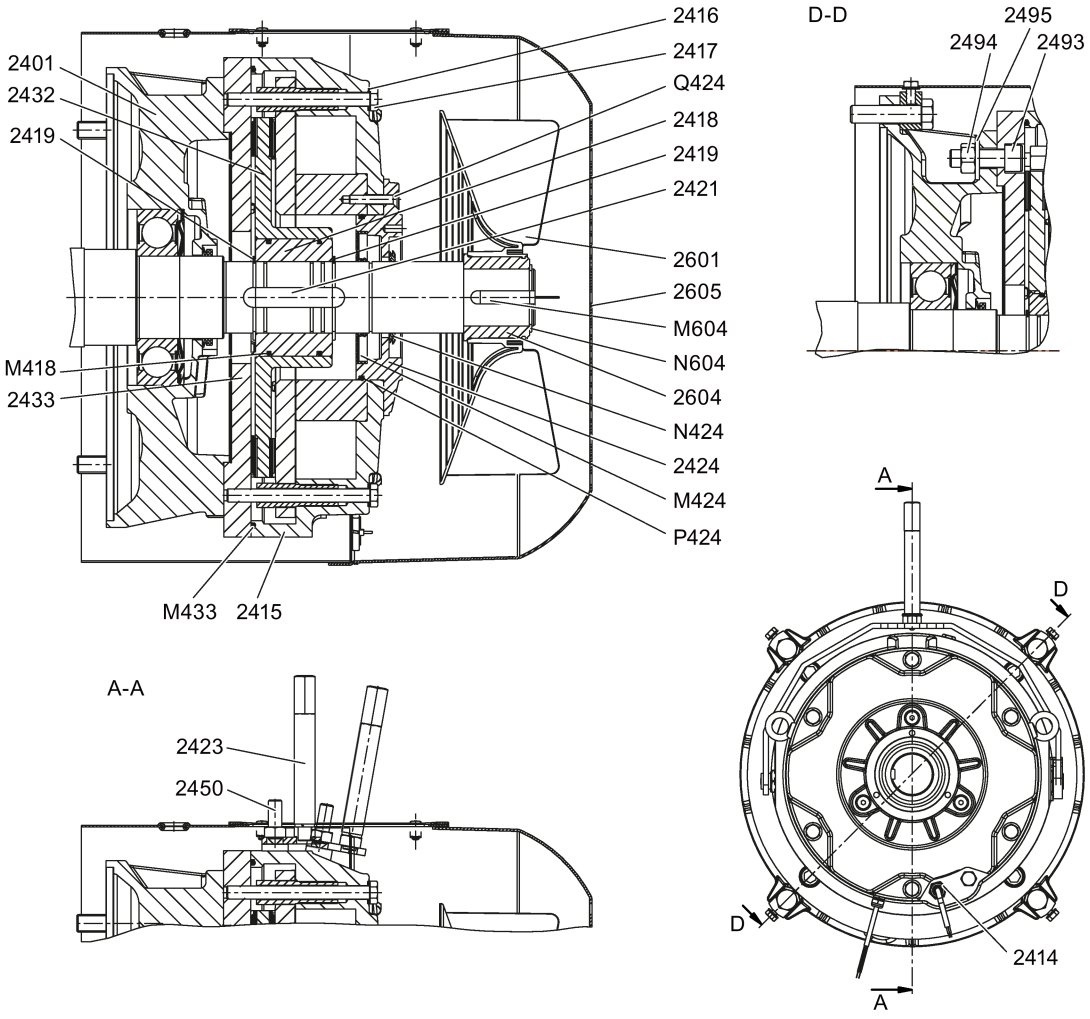

Figure 13-7 FDX brake

Spare parts list for brakes

2109 Plugs for cable slot
2115 End sleeve / lug
2401 Bearing shield
2405 Spring washer
2406 Bearing
2412 Potting compound
2413 V ring
2414 Microswitch
2415 Brake
2416 Screw lock
2417 Bolt
2418 Coupling driver
M418 O-ring
2494 Nut
2495 Screw lock
2501 Lower terminal box section
2511 Bolt
2512 Screw lock
2513 Bracket
2516 Complete terminal board
2517 Bolt
2518 Screw lock
2521 Terminal connector
2522 Terminal block
2523 Bolt
2530 Cable gland

2419 Locking ring
2420 Supporting disk / shim
2421 Featherkey
2422 Dust protection ring
2423 Manual release lever
2424 Shaft sealing ring
M424 Shaft sealing ring
N424 Shaft sealing ring
P424 O-ring
Q424 Bolt
2430 Complete cable gland
2432 Friction disk
2433 Friction plate
M433 O-ring
2437 Supporting disk / shim
2438 Seal
2441 Supporting disk / shim
2450 Lockable manual brake release
2472 Shaft extension
2493 Bolt
2531 Nut
2532 Reduction / expansion
2533 Cable
2534 Screw plug
2540 Rectifier
2601 Fan blade
2602 Tolerance ring
2603 Locking ring
2604 Bush
M604 Featherkey
N604 Locking ring
2605 Fan cover
2606 Screw lock
2607 Bolt
2615 Protective canopy
2618 Damping disk
2701 Featherkey
2702 Bolt
2703 Screw lock

13.3.3 Backstop

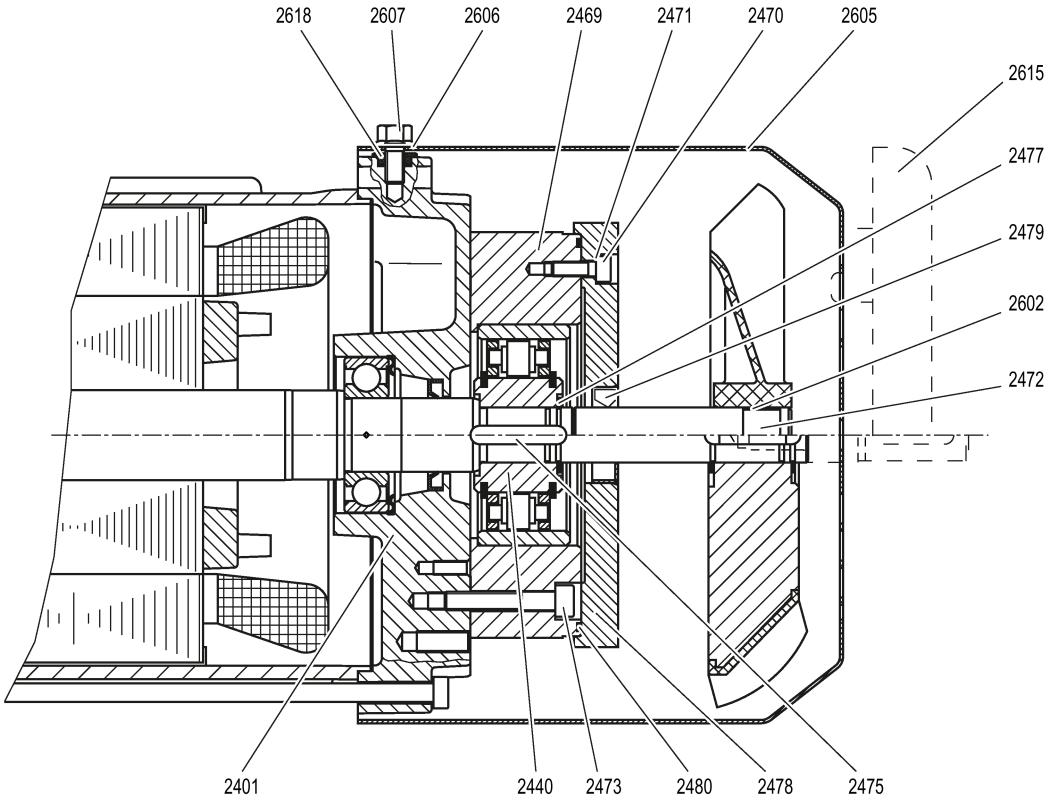

2401	Bearing shield	2478	Guard
2440	Backstop, inner ring	2479	Sealing ring
2469	Backstop, outer ring	2480	Seal
2470	Bolt	2602	Featherkey
2471	Screw lock	2605	Fan cover
2472	Shaft extension	2606	Screw lock
2473	Bolt	2607	Bolt
2475	Featherkey	2615	Protective canopy
2477	Locking ring	2618	Damping disk

Figure 13-8 Backstop

13.3.4 Encoder on fan cover

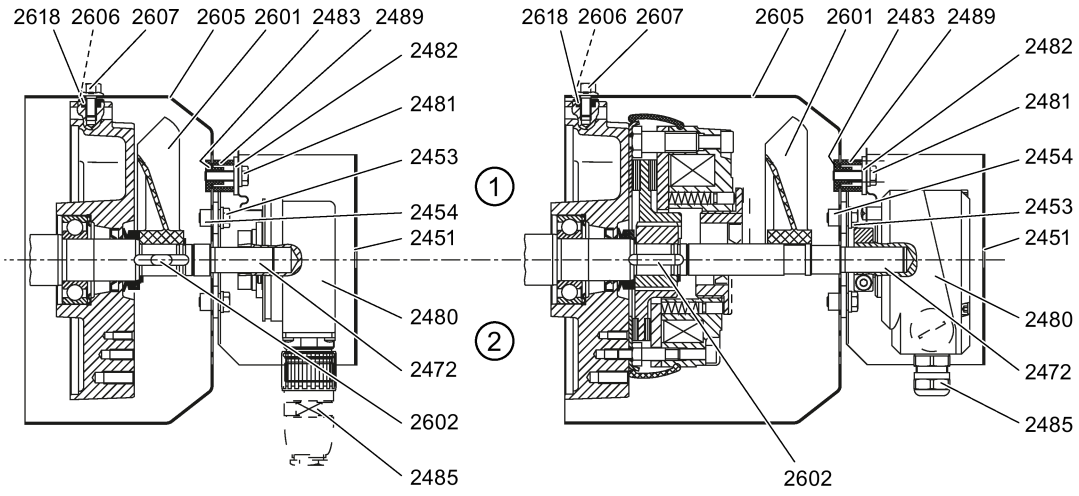

①	Self-ventilated motor	②	Unventilated motor
2451	Cover	2485	Coupling
2453	Bolt	2489	Spacer / bush
2454	Nut	2601	Fan
2472	Shaft extension	2602	Featherkey
2480	Encoder	2605	Fan cover
2481	Bolt	2606	Screw lock
2482	Screw lock	2607	Bolt
2483	Nut	2618	Damping disk

Figure 13-9 Encoder on fan cover

13.3.5 Encoder in the motor with external fan

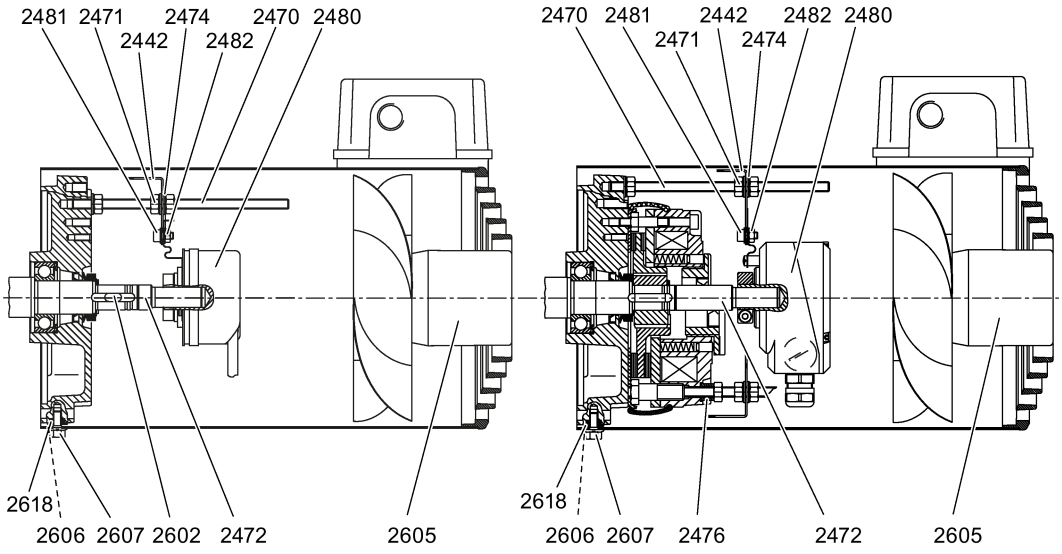

2442	Torque arm	2481	Bolt
2470	Bolt	2482	Screw lock
2471	Screw lock	2602	Featherkey
2472	Shaft extension	2605	Fan cover
2474	Screw lock	2606	Screw lock
2476	Supporting disk / shim	2607	Bolt
2480	Encoder	2618	Damping disk

Figure 13-10 Encoder in the motor with external fan

Further information

SIMOGEAR on the Internet:
www.siemens.com/simogear

Siemens Numerical Control Ltd., Nanjing
Tianjin Branch
No.126 YongJin Rd,
Tianjin, P.R.China

Scan the QR code for more information on SIMOGEAR.