SIEMENS



Operating instructions

SICHARGE

SICHARGE CC AC22 - ERK

(8EM1000-XAXXX-XXXX)

Edition 06/2021

siemens.com/sicharge

SIEMENS

SICHARGE

SICHARGE CC AC22 - ERK SICHARGE Operating instructions, ERK

Operating Instructions

Introduction 1

Safety instructions 2

Description 3

Assembly/installation 4

Connecting and commissioning 5

Operation 6

Malfunctions 7

Maintenance and service 8

Adhesive surfaces 9

Service & Support 10

Disposal 11

Technical specifications 12

Appendix A

List of abbreviations B

06/2021

A5E48571690-AC

Legal information

Warning notice system

This manual contains notices you have to observe in order to ensure your personal safety, as well as to prevent damage to property. The notices referring to your personal safety are highlighted in the manual by a safety alert symbol, notices referring only to property damage have no safety alert symbol. These notices shown below are graded according to the degree of danger.

⚠ DANGER

indicates that death or severe personal injury **will** result if proper precautions are not taken.

⚠ WARNING

indicates that death or severe personal injury **may** result if proper precautions are not taken.

⚠ CAUTION

indicates that minor personal injury can result if proper precautions are not taken.

NOTICE

indicates that property damage can result if proper precautions are not taken.

If more than one degree of danger is present, the warning notice representing the highest degree of danger will be used. A notice warning of injury to persons with a safety alert symbol may also include a warning relating to property damage.

Qualified Personnel

The product/system described in this documentation may be operated only by **personnel qualified** for the specific task in accordance with the relevant documentation, in particular its warning notices and safety instructions. Qualified personnel are those who, based on their training and experience, are capable of identifying risks and avoiding potential hazards when working with these products/systems.

Proper use of Siemens products

Note the following:

⚠ WARNING

Siemens products may only be used for the applications described in the catalog and in the relevant technical documentation. If products and components from other manufacturers are used, these must be recommended or approved by Siemens. Proper transport, storage, installation, assembly, commissioning, operation and maintenance are required to ensure that the products operate safely and without any problems. The permissible ambient conditions must be complied with. The information in the relevant documentation must be observed.

Trademarks

All names identified by ® are registered trademarks of Siemens AG. The remaining trademarks in this publication may be trademarks whose use by third parties for their own purposes could violate the rights of the owner.

Disclaimer of Liability

We have reviewed the contents of this publication to ensure consistency with the hardware and software described. Since variance cannot be precluded entirely, we cannot guarantee full consistency. However, the information in this publication is reviewed regularly and any necessary corrections are included in subsequent editions.

Siemens AG
Smart Infrastructure
Schuhstr. 60
91052 Erlangen
GERMANY

A5E48571690-AC
Ⓟ 07/2021 Subject to change

Copyright © Siemens AG 2019 - 2021.
All rights reserved

Table of contents

1 Introduction 6

1.1 Purpose of this documentation 6

1.2 Conventions 6

1.3 Open-source software 7

2 Safety instructions 8

2.1 General safety information 8

2.2 Safe installation and assembly 11

2.3 Safety during electrical installation 13

2.4 Safety during operation 15

2.5 Safe cleaning and maintenance 16

2.6 Security information 17

2.7 Safety-relevant symbols 18

2.8 Identification of the device ERK 19

3 Description 20

3.1 Application 20

3.2 Charging station structure 21

3.3 Charging module structure 22

3.4 Design of charging module with fixed charging cable option 24

3.5 Flowchart 25

3.6 Charging controller 26

3.7 Covers for infeed and charging modules 29

3.8 Counter seal 31

4 Assembly/installation 32

4.1 Safety measures during assembly 32

4.2 Preparation before assembly 33

4.3 Assembly procedure 35

5 Connecting and commissioning 44

5.1 Connecting the supply cable 44

5.2 Optional equipment 47

5.3 SIM card 49

5.4 Switching on and testing 51

5.5 Commissioning ... 51
6 Operation ... 71
6.1 Status indicators ... 71
6.2 Main menu ... 73
6.3 Charging process ... 76
6.3.1 Start charging ... 76
6.3.2 Completing the charging process ... 79
7 Malfunctions ... 81
7.1 Fault elimination ... 81
7.2 Service technician faults ... 81
7.2.1 Meter fault ... 81
7.2.2 RFID fault ... 82
7.2.3 Display fault ... 82
7.2.4 OCPP messages ... 83
7.3 FAQs ... 88
8 Maintenance and service ... 93
8.1 Cleaning and maintenance ... 93
8.2 Maintenance ... 94
8.3 Diagnostic tests ... 97
8.4 Software updates ... 103
9 Adhesive surfaces ... 104
9.1 Adhesive surfaces ... 104
10 Service & Support ... 106
10.1 Siemens Industry Support ... 106
11 Disposal ... 107
12 Technical specifications ... 108
A Appendix ... 111
A.1 Overview of article numbers ... 111
A.2 Spare parts ... 113
A.3 Installation and maintenance schedule ... 114
A.4 Options available for orders ... 116
A.5 Option: HAK ... 117
A.6 Option: Fixed charging cable ... 120
A.7 Overview of dimensions of the SICHARGE CC AC22 charging station ... 122
A.8 Information on weights and measures regulations ... 124
A.9 Debit card ... 128

A.10 Transparency software 132
A.10.1 Retrieving measured values 132
A.10.2 Installation and operation 140
A.10.3 Implementation 145
A.11 Quality documentation 150
B List of abbreviations 151

Introduction 1

1.1 Purpose of this documentation

These operating instructions contain the information required for installing, commissioning, and operating the SICHARGE CC AC22 charging station.

The operating instructions contain information on proper use of the charging station.

⚠ WARNING

Failure to comply with the information in these operating instructions may result in the following:

- Personal injury
- Material damage
- Dangerous situations
- Loss of warranty

Follow also vehicle-specific operating instructions for the respective vehicle.

Changes compared to the previous version

Compared to the 07/2020 edition, this manual contains the following changes:

- Additions to Giro-e
- Supplement to the version with Ethernet interface available for order
- Supplement to the version with fixed charging cable available for order
- Supplement to the version with operation without SD card available for order

1.2 Conventions

Figures in these operating instructions may deviate from the delivered device.

Observe the notes labeled as follows:

Note

A note contains:

- Important product information
- Information on how to handle the product

1.3 Open-source software

Open-source software is used in the firmware of the product described. The open-source software is provided free of charge. We are liable for the product described, including the open-source software contained in it, pursuant to the conditions applicable to the product. Siemens accepts no liability for the use of the open-source software over and above the intended program sequence, or for any faults caused by modifications to the software.

For legal reasons, we are obliged to publish the license terms and copyright notices in the original text. Please also read the information that is supplied with the product or made available for download on the Siemens homepage.

Safety instructions

2

2.1 General safety information

This section contains important, generally valid information on:

- Preventing accidents and material damage
- Application planning
- Mounting and installation
- Operation
- Maintaining and cleaning the charging station

Read this section carefully and follow the safety regulations. This will minimize safety risks.

Make your staff and customers aware of this section. Pass on the documentation to that group of people.

Regulations and guidelines

The section "Safety" indicates hazards and precautions, which you must observe during planning, assembly, installation, operation, and maintenance. You must also adhere to regional and national guidelines and regulations on electrical safety and accident prevention /occupational safety.

Make sure you also follow the following documents and regulations:

- Regional standards and connection conditions
- Building regulations for parking lots for electric vehicles and charging stations
- Guideline of the electricity supplier
- Foundation and reinforcement plan
- Equipment and foundation statics

The instructions in the documentation do not replace statutory safety instructions.

Target group

The sequence of the following safety instructions is based on the use stages of the product life cycle. The description is addressed to the following groups of people:

- The operator responsible for the safe operation of the device
- Technicians who set up the device
- Electrically skilled personnel who connect and start up the device.
- Maintenance and cleaning staff who maintain the device

Qualified electricians are persons who can demonstrate a professional electrician qualification. These persons are authorized to commission, ground, and label devices, systems, and circuits in accordance with established safety practices and standards.

Areas of application of the device

- Charging electrically powered vehicles in public and semi-public areas
- Charging stations for depots, car parks, public parking areas, and retail
- Stations for car-to-go projects

Intended use

The device is used to charge batteries in fully electric and plug-in hybrid electric vehicles. The charging station can be used both indoors and outdoors.

Charge electric vehicles according to IEC 61851-1 and 61851-22. If the device is used for any other purpose, this is not intended use and constitutes a misuse of the device.

Under the Product Liability Act, you must also plan for predictable, unreasonable, and improper use of the equipment.

You may use the charging stations conforming to the weights and measures legislation SICHARGE for the purpose of billing electrical work in kWh.

Expiration of the manufacturer's warranty due to unauthorized modifications to the device

Modifications to the device are not permitted. Non-compliance will void the manufacturer's warranty and invalidate the approvals.

Unauthorized opening of the device

Risk of electric shock

Only qualified personnel may open the device. If it is opened by unauthorized persons, there is a risk of substantial property damage, severe injury or death.

Qualified personnel

All activities should be performed by qualified personnel. Due to their education, experience and training, such people have knowledge of:

- Relevant standards and regulations
- Accident prevention guidelines

They are authorized to perform the necessary activities and to detect and prevent possible dangers.

Personal protective equipment

Avoid accidents and hazardous situations. Use your personal protective equipment according to the activity you are performing (such as safety helmet, safety goggles, gloves, and safety shoes).

Safety equipment

To rule out hazardous conditions, it is strictly prohibited to change, remove, bypass, or override safety devices.

Failure to follow these instructions may result in hazardous situations that could cause death or serious injury.

Risk of explosion and fire

Do not store or use flammable liquids that produce flammable fumes, such as gasoline or ethanol, in the vicinity of the charging station. Electrostatic charging or the heat occurring during charging can ignite highly flammable liquids and cause an explosion.

Failure to follow these instructions may result in hazardous situations that could cause death or serious injury.

Floodwater

If the charging station is fully or partially submerged in water, e.g. due to backwater, flooding or heavy rain, and liquid could therefore penetrate it, take the station out of operation.

Only qualified personnel may dry the station and check it for safe operation. Moisture or water inside the station may cause an electric shock.

Charging cable as a tripping hazard

Make sure that the charging cable does not block an escape route or poses a tripping hazard. The cable could block the way out and cause injuries.

Furthermore, in the event of a fall, the cable may be abruptly torn out of the socket and cause damage to the vehicle and the charging station.

Cleaning

Protect the environment and use biodegradable cleaning agents to clean the surfaces. Clean the surfaces of the charging station with a damp cloth.

Do not use a steam or water jet for cleaning, because moisture or water may penetrate into the charging station. Moisture inside the charging station poses a risk of electric shock.

Failure to follow these instructions may result in hazardous situations that could cause death or serious injury.

2.2 Safe installation and assembly

To avoid hazards, only qualified personnel may place and install the charging station. The charging station must be disconnected from the mains. Follow the installation and assembly instructions provided. Observe the applicable regional standards and regulations. Failure to follow safety instructions may result in hazardous situations that could cause death or serious injury.

Safety at the work site

When working on roads, construction sites and in public areas, ensure safety in line with local requirements and regulations.

To perform the work properly, you need to observe:

- Legal specifications
- On-site safety requirements
- Road traffic conditions

Note the following:

- Secure the working area in accordance with the "Guidelines for the safety of workstations on roads" or similar regional regulations.
- Use appropriate cordoning equipment if needed.
- Always wear a safety vest when working in the area of road traffic.
- Provide for adequate space in the working area. The working area should be at least 8 meters in diameter.
- Comply with the valid building regulations for parking spaces for electric cars including charging stations.

Risk of accident in limited workspace

In order to avoid collisions and crushing, always ensure sufficient clearance to surrounding obstacles when setting up the charging station.

There must be no objects on the ground in the working area to rule out the risk of tripping.

Electrical cables

There is a risk of electric shock due to exposed electrical connections and components.

Before starting the installation work, check that the supply cable has been disconnected from the mains and secured against restart.

If damage or tampering is visible, do not commission the charging station.

Using a crane or lifting gear

Using a crane or other mechanical lifting gear may result in hazardous situations that could cause death or severe injury.

Do not operate a crane or other mechanical lifting gear without appropriate training.

Do not leave elevated loads unattended. People must not stay underneath loads, or between loads and obstacles.

Follow safety instructions of the crane or lifting gear.

Transport at the work site

After lifting and transporting the charging station, ensure that it is safely positioned at the parking place. Secure the station against tilting or falling over.

Never set down a charging station without securing it.

Crushing hazard

The weight of the standard version is 75 kg. Depending on the options ordered, the weight differs from the standard version. Lift the charging station with at least two persons and suitable lifting equipment.

Lifting the station may result in hazards that could cause not only serious material damage but also serious injury. Do not insert or hook fingers into eyelets, cable grommets, or openings.

Ensure that persons maintain sufficient distance to avoid injury when setting the charging station down.

2.3 Safety during electrical installation

Observe the following points for the electrical installation. The electrical connection of the charging station can only be performed by skilled electricians and can only be carried out at zero current. Follow the installation and connection instructions. Observe the applicable regional standards and regulations. Failure to follow safety instructions may result in hazardous situations that could cause death or serious injury.

Safety at the work site

When working on roads, construction sites and in public areas, ensure safety in line with local requirements and regulations.

To perform the work properly, you need to observe:

- Legal specifications
- On-site safety requirements
- Road traffic conditions

Note the following:

- Secure the working area in accordance with the "Guidelines for the safety of workstations on roads" or similar regional regulations.
- Use appropriate cordoning equipment where necessary.
- Always wear a safety vest when working in the area of road traffic.
- Provide for adequate space in the working area. The working area should be at least 8 meters in diameter.
- Comply with the valid building regulations for parking spaces for electric cars including charging stations.

Risk of electric shock

The charging station uses 400 V AC supply voltage. Touching live parts may cause electric shock or death. In order to avoid hazards, charging stations may only be opened by trained and instructed electricians.

Before opening the charging station, switch off all power supplies for the device. Secure the charging station against restart.

The charging station is switched off via the load breaker switch. Activation is not possible in the charging station. De-energize the supply line.

Pull the plug, not the mains cord.

Never touch the plug with wet hands.

Do not perform any installation, maintenance, or configuration work during a thunderstorm.

Do not connect the vehicle to or disconnect it from the charging station during a storm.

Damage to sockets and charging cable

Inspect sockets and the charging cable for damage on a regular basis. Damaged charging cables endanger safe operation.

If you detect damage to the charging cable, do not commission the cable or stop a running charging process. Disconnect the charging cable from the mains without touching it. Ensure that the device cannot be switched back on.

If you notice damage to the charging station, take it out of service. To do this, disconnect the charging station from power supply and secure it against a restart.

Defective connectors or cables may cause fire. The qualified personnel must decommission the system and replace the damaged components immediately.

Condensed water

Before commissioning the charging station, a skilled electrician must check whether there is condensed water in the charging station. Remove even small amounts of condensed water before commissioning.

Moisture in the charging station can lead to electric shock.

Do not switch off the power supply for an extended period of time after commissioning. This will prevent condensation in the charging station. If the charging station is to be switched off for a longer period of time, you need to provide suitable moisture protection.

2.4 Safety during operation

Observe the following points when operating the charging station, as well as the applicable regional standards and regulations. Failure to follow safety instructions may result in hazardous situations that could cause death or serious injury.

Safety at the work site

When working on roads, construction sites and in public areas, ensure safety in line with local requirements and regulations.

To perform the work properly, you need to observe:

- Legal specifications
- Safety requirements valid on site
- Road traffic conditions

Note the following:

- Secure the working area in accordance with the "Guidelines for the safety of workstations on roads" or similar regional regulations.
- Use appropriate cordoning equipment if needed.
- Always wear a safety vest when working in the area of road traffic.
- Provide for adequate space in the working area. The working area should be at least 8 meters in diameter.
- Comply with the valid building regulations for parking spaces for electric cars including charging stations.

Electrical hazards

The charging station uses 400 V AC supply voltage. Touching live parts may cause electric shock and could be fatal.

Work on the electrical installation may only be carried out by trained electricians and at zero current.

Charging cable and socket

Defective connectors or cables may cause fire. Decommission the system if there are defects. Have the defective parts repaired by qualified personnel.

Do not bend or squeeze the charging cable; do not run it over sharp edges, and use it only within the permissible temperature range.

Inspect sockets and the charging cable for damage on a regular basis.

2.5 Safe cleaning and maintenance

Observe the following points for cleaning and maintenance. Electrical equipment may only by cleaned and maintained by qualified personnel. Act according to the safety instructions given. Observe the applicable regional standards and regulations. Failure to follow safety instructions may result in hazardous situations that could cause death or serious injury.

Safety at the work site

When working on roads, construction sites and in public areas, ensure safety in line with local requirements and regulations.

To perform the work properly, you need to observe:

- Legal specifications
- On-site safety requirements
- Road traffic conditions

Note the following:

- Secure the working area in accordance with the "Guidelines for the safety of workstations on roads" or similar regional regulations.
- Use appropriate cordoning equipment where necessary.
- Always wear a safety vest when working in the area of road traffic.
- Provide for adequate space in the working area. The working area should be at least 8 meters in diameter.
- Comply with the valid building regulations for parking spaces for electric cars including charging stations.

Cleaning

Protect the environment by using biodegradable cleaning agents to clean the surfaces. Clean the surfaces of the charging station with a damp cloth.

Do not use steam jets or water jets for cleaning, as they may cause moisture to infiltrate the charging station. Moisture inside the charging station poses a risk of electric shock.

Failure to follow these instructions may result in hazardous situations that could cause death or serious injury.

2.6 Security information

Siemens provides products and solutions with industrial security functions that support secure operation of plants, systems, machines, and networks.

In order to protect plants, systems, machines, and networks against cyber threats, it is necessary to implement – and continuously maintain – a holistic, state-of-the-art industrial security concept. Siemens' products and solutions constitute one element of such a concept.

Operators of the charging station are responsible for preventing unauthorized access to their plants, systems, machines, and networks. Such systems, machines and components should only be connected to an enterprise network or the internet if and insofar such a connection is necessary, and only when appropriate safety measures (e.g. firewalls and/or network segmentation) are in place.

Additional information on industrial safety measures can be found under (https://www.siemens.com/industrialsecurity).

Siemens' products and solutions undergo continuous development to make them more secure. Siemens strongly recommends applying product updates as soon as they are available and using the latest product versions. Use of product versions that are no longer supported, and failure to apply latest updates may increase customer's exposure to cyber threats.

To stay informed about product updates, subscribe to the Siemens Industrial Security RSS Feed under (https://www.siemens.com/industrialsecurity).

Password

Assign a secure password during commissioning to protect the charging station against unauthorized access.

When choosing a password, follow the current recommendations on security in information technology.

2.7 Safety-relevant symbols

Icons for SICHARGE CC AC22

The following table explains icons than may be located on your product, on its packaging, or in the accompanying documentation.

Symbol	Meaning
	General warning sign **Caution/Notice** You must read the product documentation. The product documentation contains information about the type of potential hazard and helps to recognize risks and implement countermeasures. ISO 7000 No. 0434B, DIN ISO 7000 No. 0434B
	Read the information provided in the product documentation. ISO 7010 M002
	Ensure the device is only installed by an electrically skilled person. IEC 60417 No. 6182
 F<2N DISPLAY F<4N HOUSING	Adhere to the values for the mechanical load of the device.
 CABLE SPEC.	Note that connected mains lines must be designed according to the expected minimum and maximum ambient temperature.
 EMC	Note that the device must be installed and connected in accordance with EMC regulations.
 U = 0V	When the device is connected to the mains, it must not be installed, dismantled, plugged in, or unplugged.
	Note that a device may be exposed to electrical voltages which can be dangerous. ANSI Z535.2

2.8 Identification of the device ERK

Two identical nameplates are located on the rear of the charging station and on the inside of the device door. The nameplates provide information about the device name, serial number and important connection information.

Information on the nameplate will help service and support with troubleshooting and procuring matching spare parts. For this reason, do not remove the rating plate. Make sure that the information is legible.

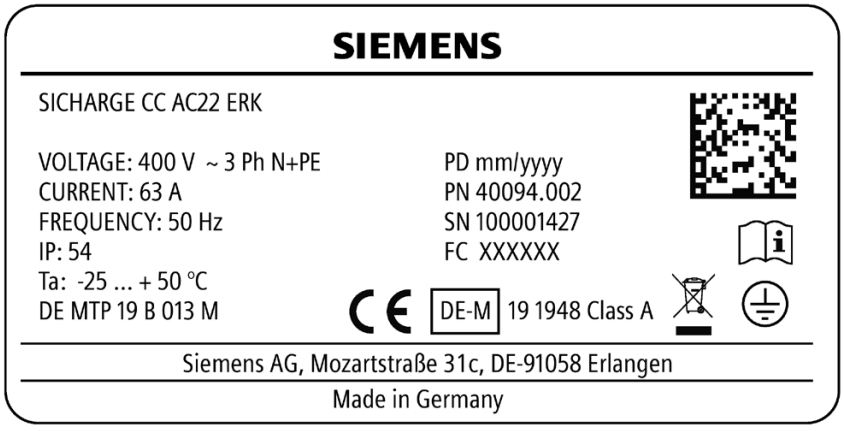

VOLTAGE	Supply voltage
CURRENT	Max. current
FREQUENCY	Connection frequency
IP	Degree of protection
Ta	Operating temperature
PD	Production date
PN	Production no.
SN	Serial number
FC	Factory Code

Figure 2-1 Rating plate SICHARGE CC AC22 - ERK

Description

3

3.1 Application

This charging station is a first-class, cutting edge product. You can charge electrically powered vehicles safely and reliably with the SICHARGE CC AC22 charging station.

Use

Charging stations can be used for stand-alone operation. They can also be integrated into flexible, modular, and retrofittable infrastructure.

Fields of application

- Charging electrically powered vehicles in public and semi-public areas
- Charging stations for depots, car parks, public parking areas, and retail
- Stations for car-to-go projects

Functions and properties

- Charging of electric vehicles in accordance with IEC 61851-1 and 61851-22
- Housing made from stainless steel and aluminum, plastic cover
- Lockable, modular plug connections

In combination with a back-end system, the charging station offers the following functions:

- Connection and control via network, smartphones, and digital terminals
- Centralized monitoring, maintenance, and evaluation
- Content management system for central editorial maintenance of display contents

3.2 Charging station structure

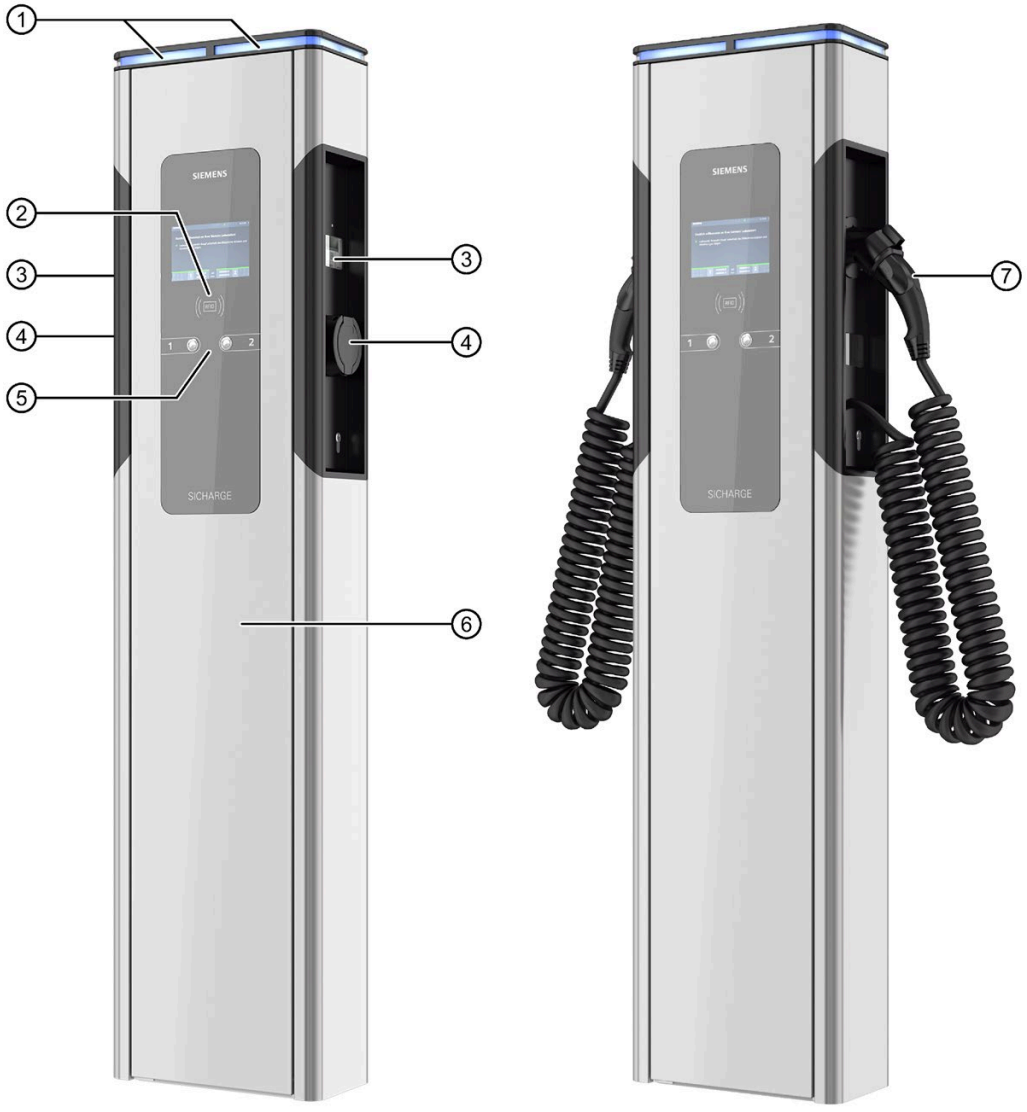

① Status light
② RFID reader
③ Viewing window for meter
④ Charging connection type 2
⑤ Pushbutton
⑥ Maintenance door
⑦ Option: Fixed charging cable

Figure 3-1 Charging station structure

3.3 Charging module structure

Options and accessories may vary.

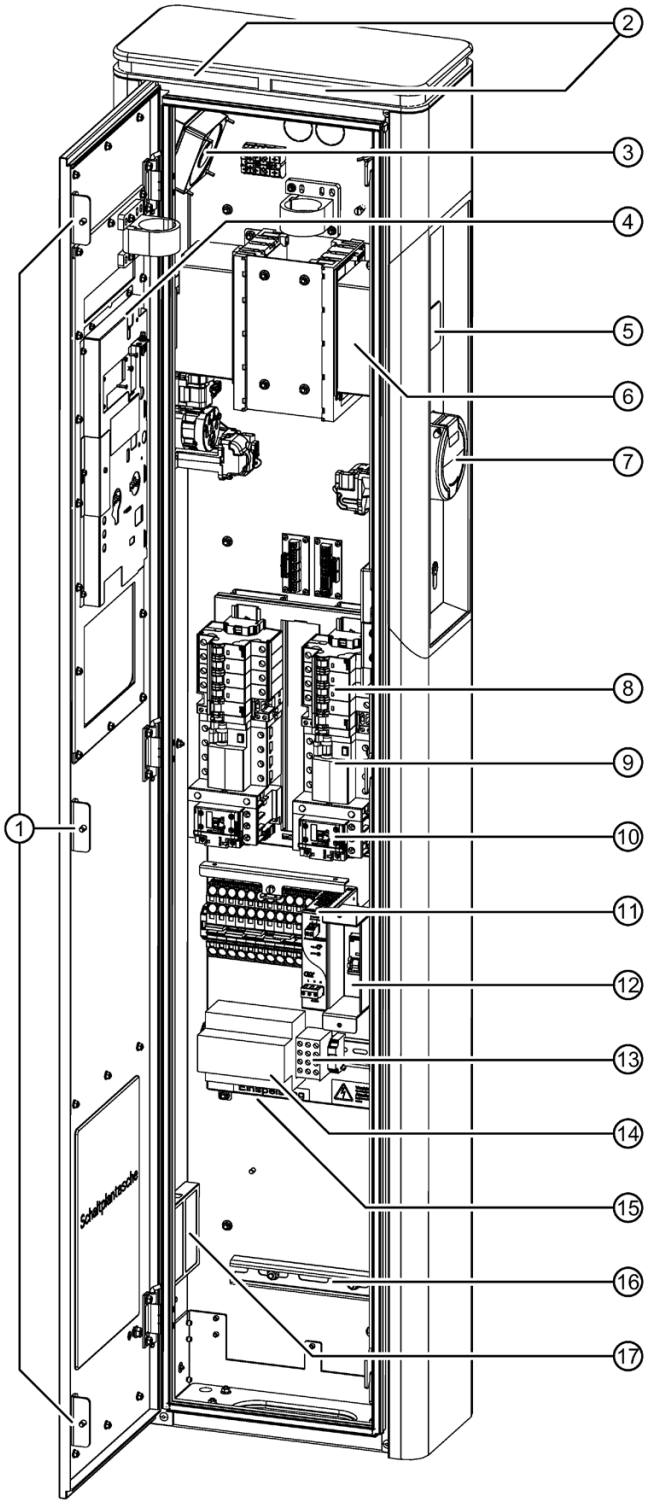

① Multiple door lock
② Status light for each charging point
③ Control cabinet fan
④ Charging controller
⑤ Viewing window for meter
⑥ Electronic residential meter
⑦ Charging socket type 2
⑧ Fuses for charging points
⑨ Residual current circuit breaker
⑩ Contactor for charging point
⑪ Power supply unit
⑫ Charging controller fuse
⑬ PE terminal
⑭ Load breaker switch
⑮ Infeed unit
⑯ C rail strain relief
⑰ Filter mat

Figure 3-2 Charging module structure

3.4 Design of charging module with fixed charging cable option

Options and accessories may vary.

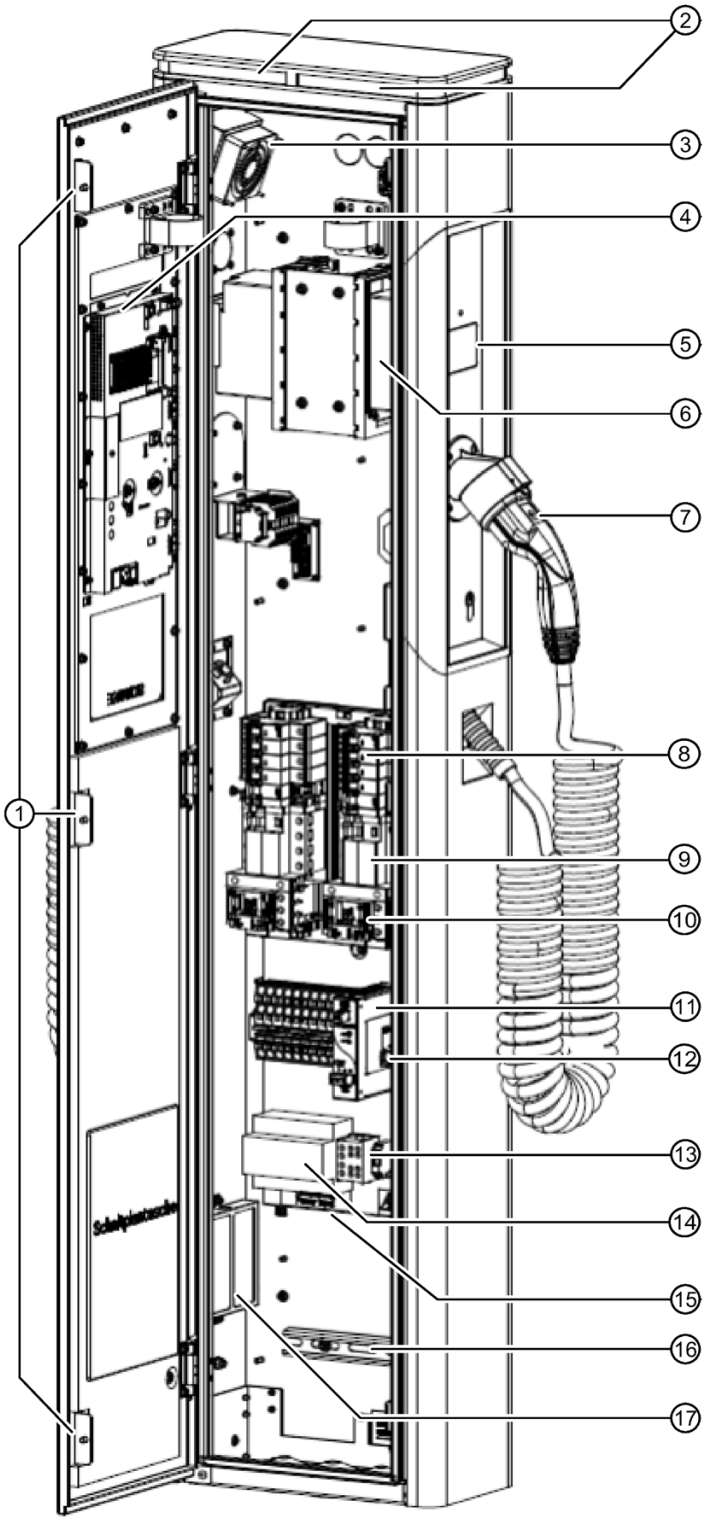

① Multiple door lock
② Status light for each charging point
③ Control cabinet fan
④ Charging controller
⑤ Viewing window for meter
⑥ Electronic residential meter
⑦ Fixed charging cable
⑧ Fuses for charging points
⑨ Residual current circuit breaker
⑩ Contactor for charging point
⑪ Power supply unit
⑫ Charging controller fuse
⑬ PE terminal
⑭ Load breaker switch
⑮ Infeed unit
⑯ C rail strain relief
⑰ Filter mat

Figure 3-3 Design of charging module with fixed charging cable

3.5 Flowchart

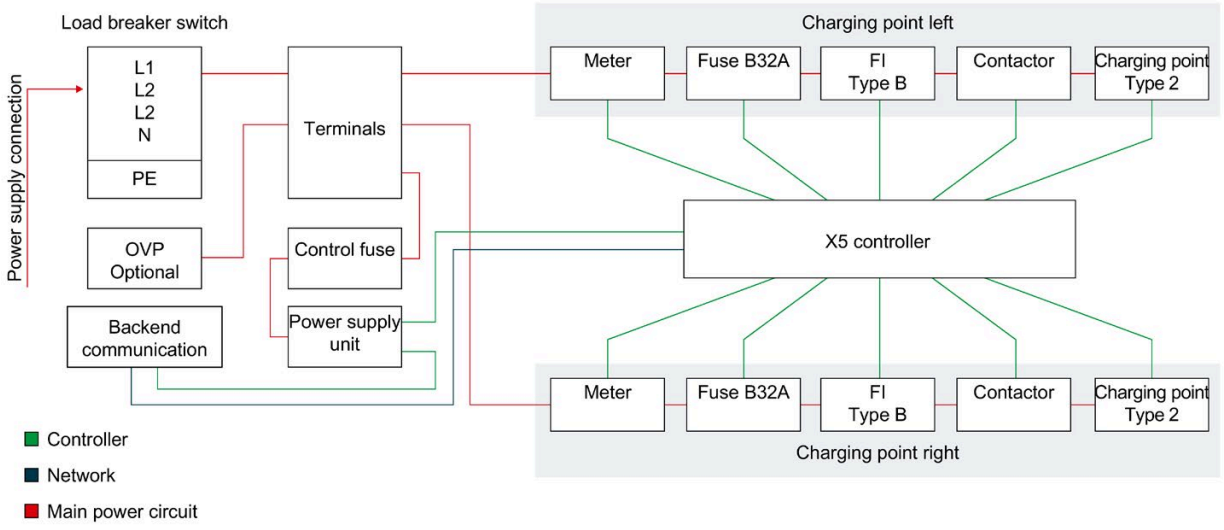

Figure 3-4 Schematic representation of SICHARGE functions

3.6 Charging controller

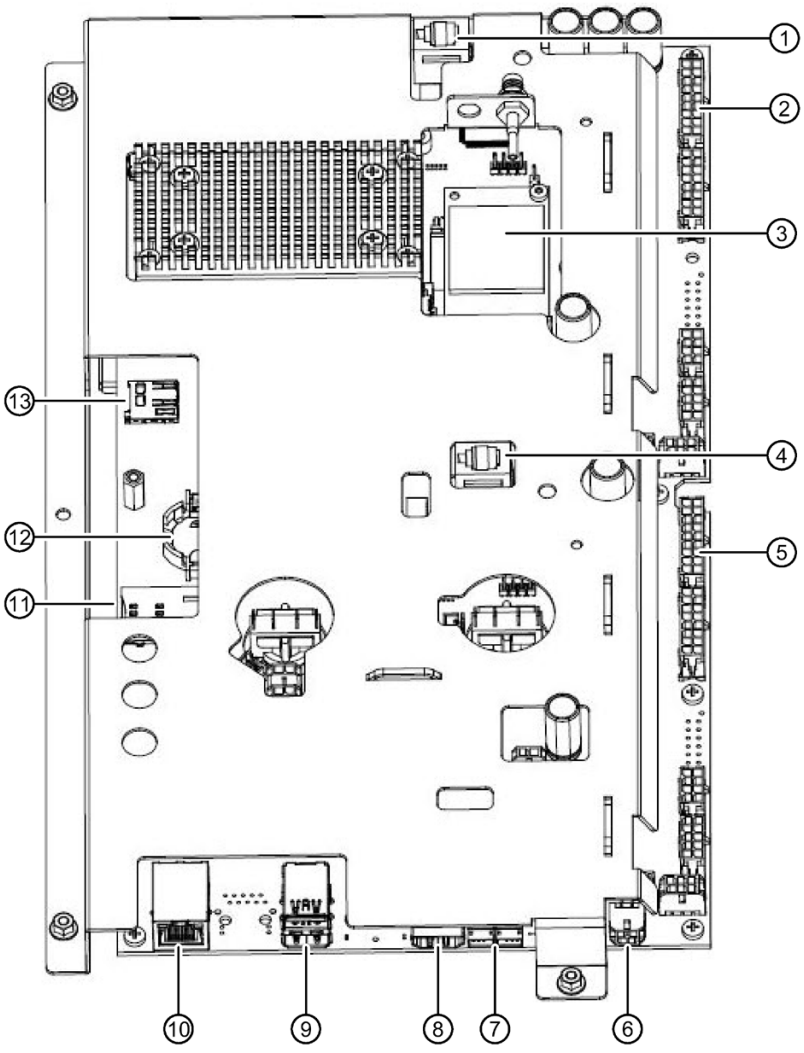

① Charging point 1, electronic residential meter connection
② Charging point 1 charging module controller (MCB, RCCB, contactor, charging socket type 2, status indicator)
③ 4G module or Ethernet module
④ Charging point 2, electronic residential meter connection
⑤ Charging point 2 charging module controller (MCB, RCCB, contactor, charging socket type 2, status indicator)
⑥ 24 V DC power supply
⑦ Connection of selection pushbutton
⑧ HDMI output
⑨ 2x USB
⑩ RJ45 service interface
⑪ SIM card
⑫ Backup battery
⑬ SD card

Figure 3-5 Description of the charging controller

4G module or Ethernet module

The communication module is available in 2 different versions.

- 4G module for 4G mobile wireless in connection with the SIM card
- Ethernet module for an RJ45 Ethernet interface

The article number of the charging station indicates which communication module the charging station has ex works.

RJ45 service interface

The Ethernet socket is used to access the WebUI and the parameters.

The Ethernet socket is not suitable for a network connection or connection to the backend.

SIM card

The SIM card is required for communication e.g. with the backend.

The SIM card is not included in the standard delivery of the charging station. If desired, an optional pre-configuration can be carried out at the manufacturer. Contact Siemens branch for more information.

Backup battery

The backup battery keeps data such as the time and date in the controller when the supply voltage is switched off.

SD card

Charging processes are also stored on the SD card. Charging data is relevant for the calibration authorities. For this reason, the SD card is sealed.

In exceptional cases, operation is possible without SD card. This configuration is available ex factory upon request. With this configuration, the operator is responsible for ensuring that all data relevant for the calibration law are stored via the backend according to the regulations.

SD card seal

The security seal of the SD card is used as access protection/manufacturer protection. The seal of the SD card is a manufacturer seal.
If the security seal of the SD card under the cover is broken, shut down the unit and inform the manufacturer. This will rule out any tampering. Broken safety seal results in loss of warranty and operating ban.

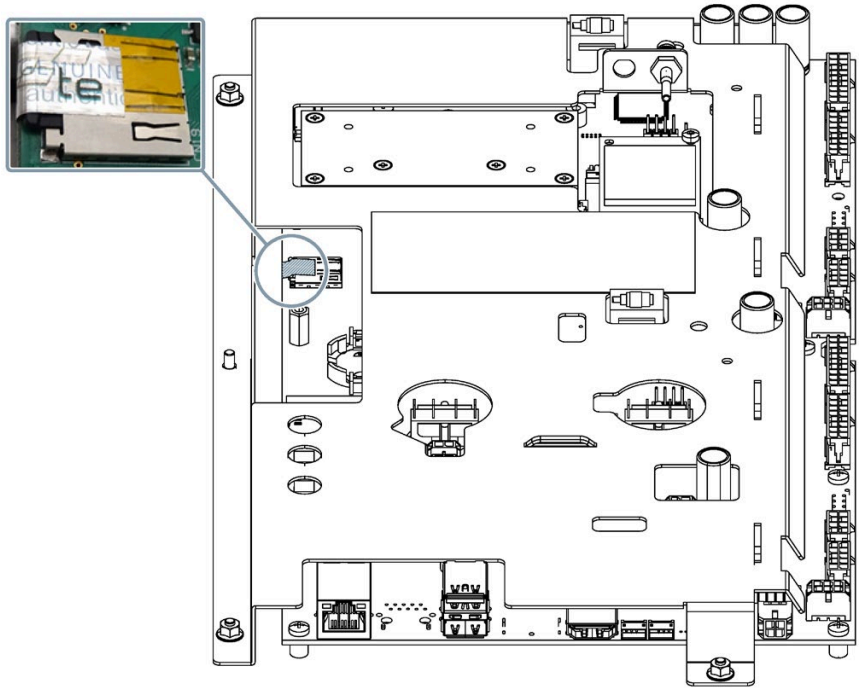

Figure 3-6 Charging controller SD card seal

Note

Security seal

When trying to remove the label, parts of the hologram and a VOID lettering remain.

Reuse or manipulation is thus excluded.

User seal for plug-in connections of the charging point controller

The operator is obligated to attach a user seal to the two plug-in connections of the charging point controller. The two plug-in connections are labeled in the graphic above "Description of the charging controller" with the numbers ② and ⑤. The user seal can, for example, be in the form of a security seal/adhesive seal.
The user seal of the plug-in connections of the charging point controller is a user seal/operator seal.

Note

Security seal

When trying to remove the label, parts of the hologram and a VOID lettering remain.

Reuse or manipulation is thus excluded.

3.7 Covers for infeed and charging modules

Sealable covers protect the charging module and the infeed against tampering. The unit is delivered without seals. The operator must seal the covers using seals. Only personnel authorized by the operator may open the seals. Notify the operator immediately if you find broken seals or damaged covers.

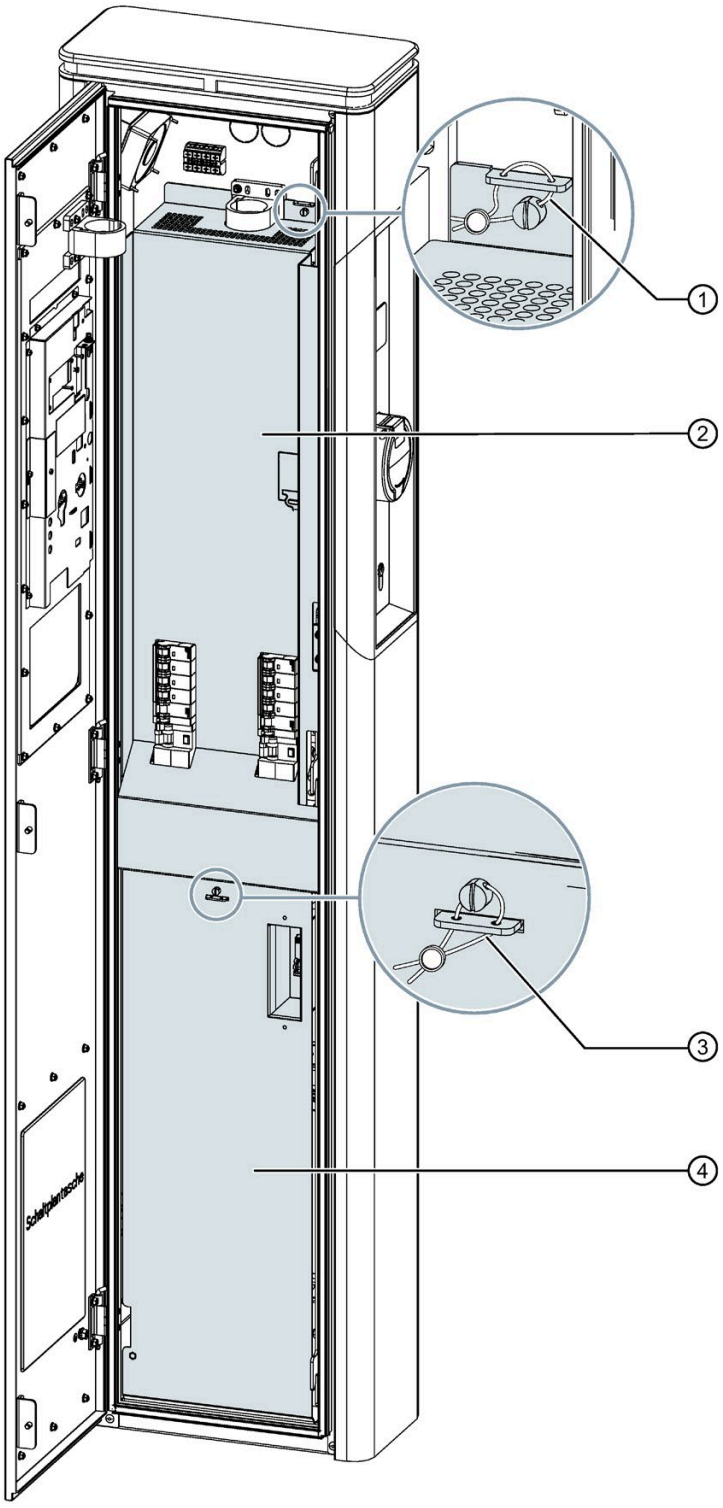

① Sealing of the charging modules by operators
② Cover for charging modules
③ Sealing of the infeed area by the operator
④ Feed cover

3.8 Counter seal

The seal of the counter serves as access / manufacturer protection.
The seal protects counters against tampering or removal. The manufacturer seals the counter using a seal. Only personnel authorized by the manufacturer may open the seals. If you find a damaged seal, take the device out of service and report it immediately to the operator and manufacturer.

The image shows the position of the seal using the left counter as an example.

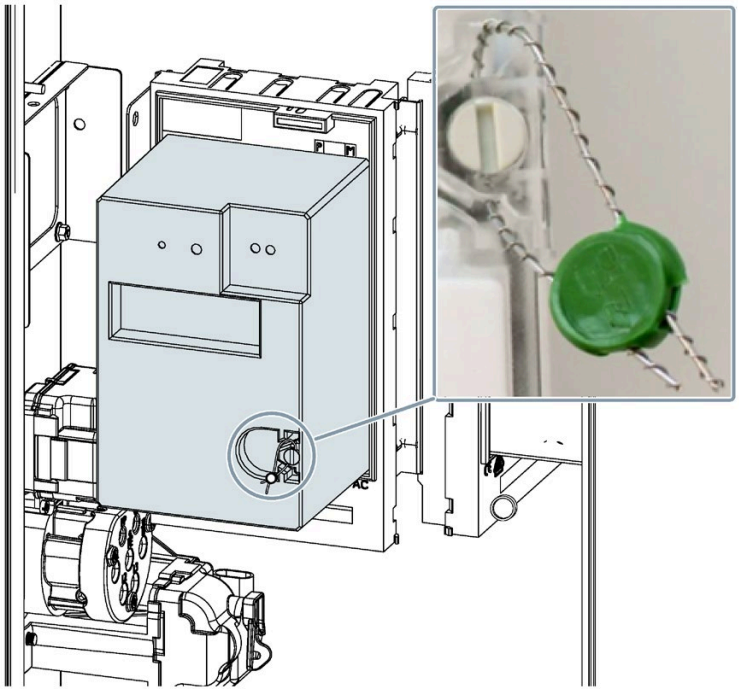

Figure 3-7 Counter seal

Assembly/installation

4

4.1 Safety measures during assembly

General information

Charging of electric cars must guarantee high performance over long periods. The installation and pre-installation of the charging station must comply with the power requirements. To ensure that these requirements are fulfilled correctly, these installation instructions are intended for qualified and trained electricians. As a qualified electrician, you are responsible for safety, not only during installation, but also during subsequent use by the operator and the end user.

Mount the charging station on concrete foundation. Mounting is possible with:

- Segment anchor rods
- Ground anchors + screws
- Mounting plate with foundation anchor (option B00)

Feed the cables through the base of the charging station.

⚠ DANGER

Risk of electric shock due to exposed electrical connections and components

Before starting the installation work, check that the supply cable has been disconnected from the mains and secured against restart.

Do not connect the charging station if damage or tampering is visible.

⚠ WARNING

Follow all safety instructions. This will help you avoid hazardous situations that could result in serious injury or death.

Comply with all national requirements for testing the installation. Only qualified personnel may install the charging station. The following points described the step-by-step installation of the charging station. Additional steps may be necessary in your location of use. These assembly instructions therefore do not claim to be exhaustive.

Foundation

Prepare the foundation according to the "foundation and reinforcement plan" of the respective installation type.

The "Foundation and reinforcement plan" for your system type can be found in section Preparation before assembly (Page 33).

Set the foundation according to the planning guidelines. Equip the foundation with electrical connections.

The foundation requirements are based on generally accepted data on the site and the wind force that will hit the surface (inland wind load zone 3). Adjust the foundation if there are different requirements at a location. The customer is responsible for the correct dimensions of a foundation.

4.2 Preparation before assembly

Requirements

- Follow country-specific statutory installation requirements.
- Prepare and position the concrete foundation according to the "foundation and reinforcement plan" of the respective installation type.
  - Foundation and reinforcement plan for standard version (https://support.industry.siemens.com/cs/ww/de/view/109780588)
  - Foundation and reinforcement plan for option: HAK (https://support.industry.siemens.com/cs/ww/de/view/109780588)
- Anchor the four segment anchor rods or the mounting plate in the concrete foundation according to the "Foundation and reinforcement plan" of the system type. Do not damage the threads. Alternatively, prepare the fastening for installation according to the dimensions of the "Foundation and reinforcement plan".
- When using empty pipes or corrugated pipes:
  Cut the empty pipes or corrugated pipes at the top edge of the foundation.
- The power supply connection is available. At least 60 cm of cable is required for installation above the top of the concrete foundation.
- All power supply connections are de-energized and secured against unintentional reconnection.
- Optional:
  Seal the empty pipes or corrugated pipes with a sealing compound or sealing sleeve.

Required tools

The required tools are not included in the scope of delivery.

- Combination wrench set up to 19 width across flats
- Key for housing (in the accessory kit)
- Spirit level
- Phillips head screwdriver set
- Slotted screwdriver set
- Tool set for electricians
- Allen key size 4, 5, 6

Required material

The required material is not included in the delivery.

- Concrete foundation
- Reinforcement
- Mounting plate, anchor system or threaded rods
- Empty pipe or corrugated pipe
- Cable tie set
- Strain relief that matches the cable (i.e. OBO clamping bracket / BBS clamp)
- Optional:
  Sealing compound or sealing sleeve for the empty pipes or corrugated pipes used
- Sealing between foundation and charging station (e.g. base filler Hager-ZAY95075)
  Required quantity: Approx. 2.5 liters.

4.3 Assembly procedure

Specific safety measures

⚠ DANGER

Risk of electric shock when moist due to condensed water

Before commissioning the charging station, an authorized and qualified electrician must check whether there is moisture in the charging station. Remove even small amounts of condensed water before commissioning. Take appropriate measures for drying.

Do not switch off the power supply for an extended period of time after commissioning. This will prevent condensation in the charging station. If the charging station is to be switched off for a longer period of time, you need to provide suitable moisture protection.

⚠ WARNING

Crushing hazard

The weight of the standard version is 75 kg. Depending on the options ordered, the weight differs from the standard version. Lifting the unit may result in hazards that could cause not only serious material damage but also serious injury.

- Only lift the system with at least two persons and suitable lifting equipment.
- Follow accident prevention regulations.
- When setting down the load, make sure that no body parts are trapped.

Do not insert or hook fingers into eyelets, cable grommets, or openings.

⚠ WARNING

Risk of accident

Using a crane or other mechanical lifting gear may result in hazardous situations that could cause death or severe injury.

- Do not operate cranes or other mechanical lifting equipment when not instructed to do so.
- Do not leave elevated loads unattended.
- People must not stay underneath loads, or between loads and obstacles.

Follow safety instructions for the crane or lifting gear.

⚠ WARNING

Risk of accident

Risk of accident when the charging station is not secured.

- Do not leave the charging station unattended.
- Place or lay down the charging station and its parts in such a way that the charging station and its parts cannot tip over or fall down.

⚠ WARNING

Risk of accident

Risk of accident in limited space. Leave sufficient clearance to surrounding obstacles to avoid collisions and crushing when setting up the charging station.

- Ensure that there is sufficient clearance to the surrounding obstacles when setting the load down.
- Keep the working area free of objects to avoid the risk of tripping.

Preparing the assembly

1. Check the requirements.
2. Carefully open the packaging.
3. Provide a base for setting the charging station down.
4. Carefully remove the charging station from the package.
5. Inspect the charging station for damage. Complaints filed after installation will not be accepted.
6. Inspect the package content:
   - The charging station
   - 1 circuit diagram
   - 1 key
   - The test protocol
   - 2 stickers with quick reference guide for charging

You will also need consumables for the selected installation variant.

⚠ DANGER

Risk of electric shock due to exposed electrical connections and components

Before starting the installation work, check that the supply cable has been disconnected from the mains and secured against restart.

If damage or tampering is visible (e.g. on the enclosure, socket), do not operate the charging station.

Preparing the foundation

Check that the foundation is horizontal using a spirit level.

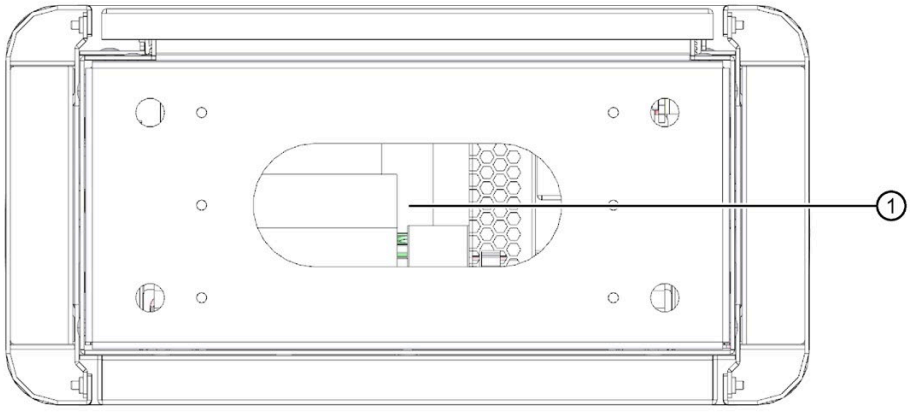

① Cable entry, view from the bottom

Figure 4-1 Foundation, base view

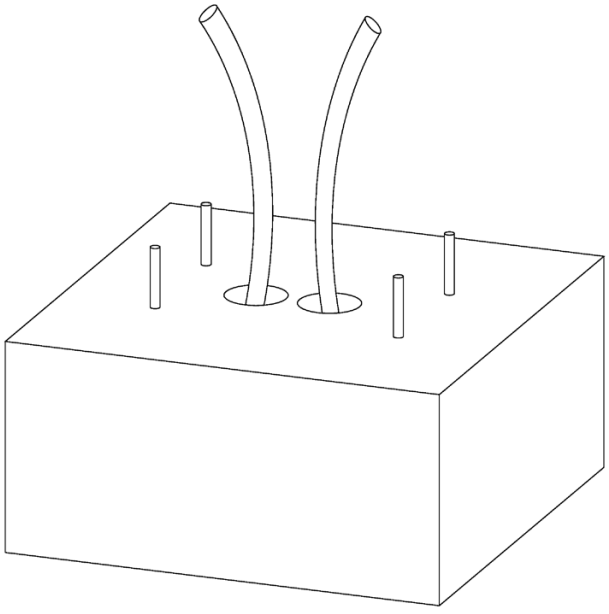

Figure 4-2 Top view of the foundation

The diagram shows an example of a supply line and branch line.

Shorten all cables to 60 cm above the foundation.

Note

HAK option

With the HAK option, the foundation and cable routing are different than shown in this figure. The foundation and reinforcement plan can be found here (https://support.industry.siemens.com/cs/ww/de/view/109780588).

Note

Ethernet interface version

For the version with Ethernet interface, you require an additional empty tube or corrugated tube for the network cable. The network cable category Cat5 or higher is laid to the charging station in this empty pipe or corrugated pipe.
Shorten the network cable to 60 cm above the foundation.

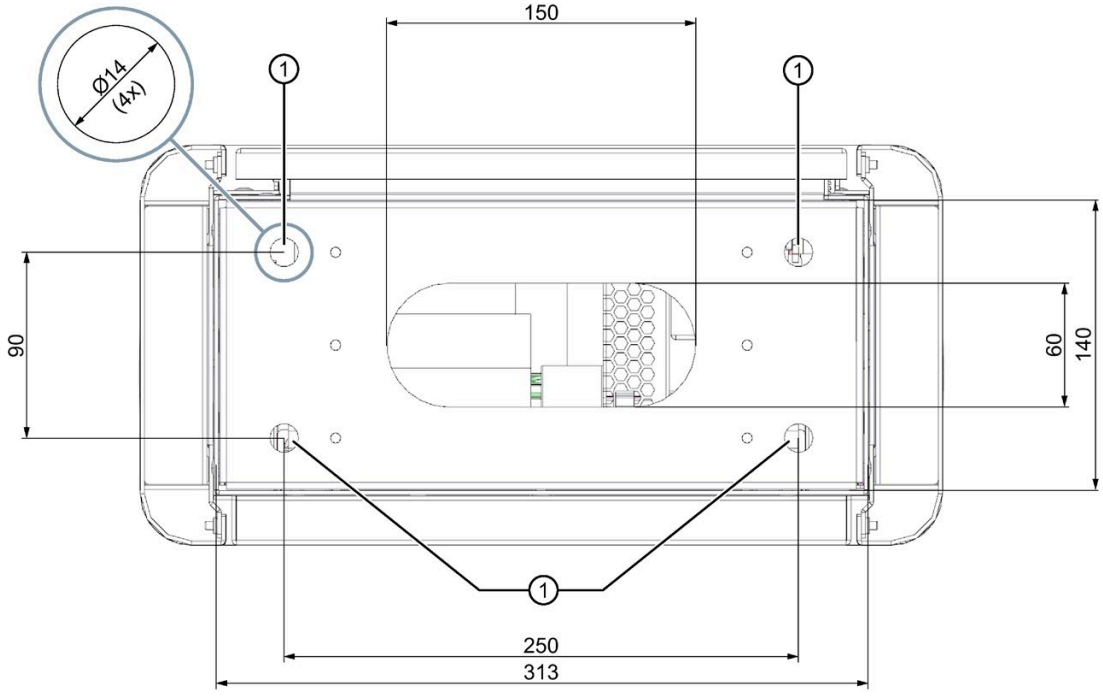

① Drill holes for M12 threaded rods

Figure 4-3 Drill picture

Opening the housing

⚠ WARNING

Crushing hazard

The weight of the standard version is 75 kg. Depending on the options ordered, the weight differs from the standard version. Lifting the unit may result in hazards that could cause not only serious material damage but also serious injury.

- Only lift the system with at least two persons and suitable lifting equipment.
- Follow accident prevention regulations.
- When setting down the load, make sure that no body parts are trapped.

Do not insert or hook fingers into eyelets, cable grommets, or openings.

⚠ WARNING

Risk of accident

Risk of accident due to an unsecured, moving module.

- Do not leave the open charging station unattended.
- Place or lay down the charging station and its parts in such a way that the charging station and its parts cannot tip over or fall down.

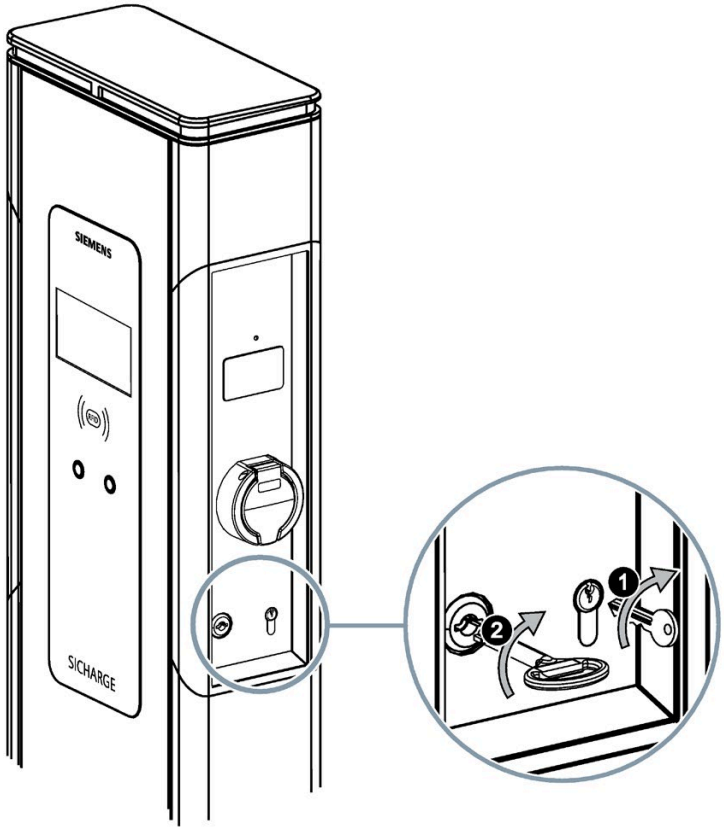

The keys for the unit and the control cabinet are on the right.

To open the housing, follow these steps:

1. Turn the unit key to the right. Hold the key in this position.
2. To unlock the door, turn the switch cabinet key to the right.

Mounting the charging station onto the concrete foundation

1. Remove the infeed cover.
2. Do not lift the charging station by yourself.
3. Feed the cables through the openings in the base plate.
4. Place the charging station on the mounting plate, drilled holes, or four threaded rods.
5. Mount a A13 washer and a M12 nut onto each threaded rod, or drive the anchors into the drilled holes.
6. Align the charging station using a spirit level.
7. Tighten the nuts. The tightening torque is 40 Nm.
8. Cut/punch out the plastic cable entry for the cable(s) used.
   The cable entry must completely enclose the cable.
9. Route the cable(s) through the sealing plate.

Note

Ethernet interface version

When using a prefabricated network cable, sealing is not guaranteed by the sealing plate. Do not install the RJ45 plug on the network cable until step 9 has been completed.

You can find more information in section Optional equipment (Page 47).

10.Mount the sealing plate flush with the mounting plate.

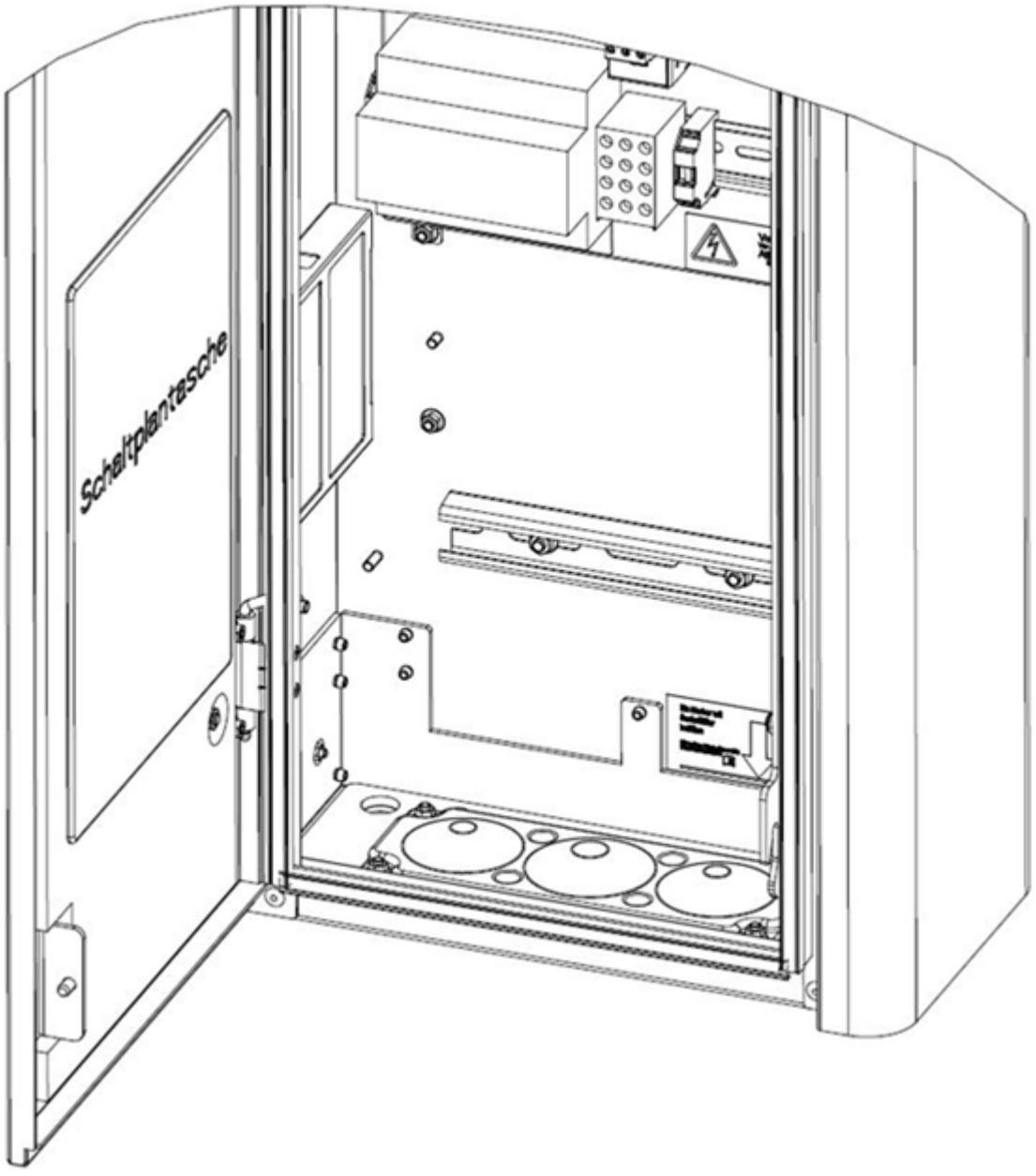

Figure 4-4 Cable entry

11.Fill the charging station with base filler up to the black line (e.g. Hager ZAY95075).

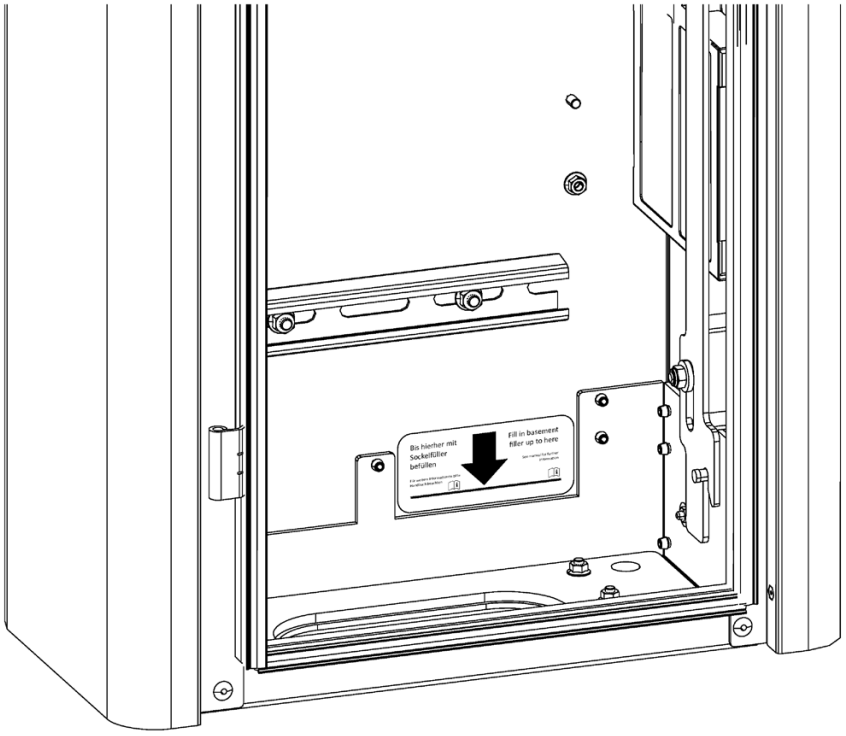

Figure 4-5 Marking for base filler

Sticker with the quick reference guide for charging

The charging station is supplied with a sheet of stickers. The stickers describe the procedure for starting and ending the charging.

After setting up the charging station, stick the stickers underneath the meter window of each charge point. The sticker will be illuminated by the meter lighting due to its position.

Note

Adhesive area for the quick reference guide

Clean the area to which the quick reference guide will be adhered. The adhesive area of the charging station must be:

- Dry
- Clean
- Free of grease

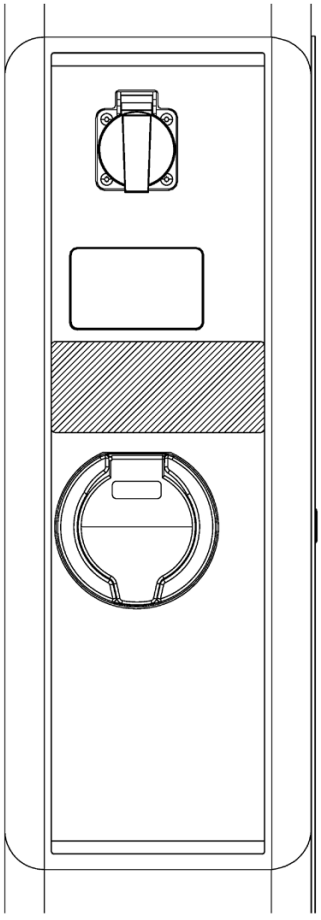

Figure 4-6 Position of the sticker

Connecting and commissioning

5

5.1 Connecting the supply cable

Select the cable cross-section according to load and voltage drop:

Note

Three-phase operation

The charging station may only be operated with 3 phases + N + PE. The specifications can be obtained from the rating plate (Page 19).

- Main line: 10 - 35 mm² rigid/stranded, 3.5 Nm
- Branch line to a second charging station: 1.5 - 25 mm² rigid/stranded, 2.5 Nm
- Stripped length: 25 mm

Note

Option: HAK

Cable routing and the procedure for the HAK option are described in section Option: HAK (Page 117).

Procedure

⚠ DANGER

Risk of electric shock

When connecting the SICHARGE charging station, pay attention to the five safety rules.

With the double terminal option, make sure that the branch line is not unintentionally energized.

To connect the supply cable, proceed as follows:

1. Sheath the power supply cable above the strain relief.
   Make the protective conductor at least 50 mm longer than L and N.
2. Lay the cables in the housing in loops, as shown in the following figure.

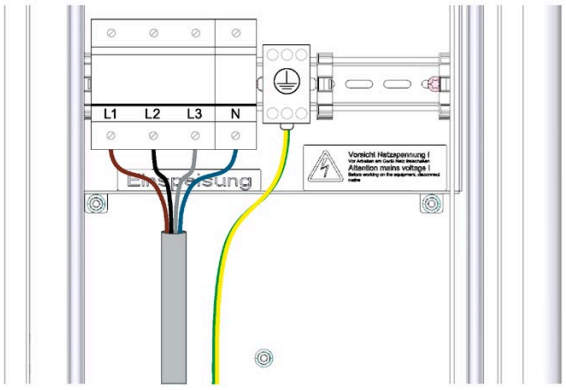

Figure 5-1 Infeed unit

Note

Option: Double terminal for connecting a branch line

If you have ordered the optional double terminal for connecting a branch line, the double terminal is mounted and wired next to or underneath the PE terminal.

The main and branch lines are connected to this double terminal.

A maximum of 2 SICHARGE charging stations may be operated on one power supply.

3. Connect the protective conductor to the main line terminal.
   Use wire end sleeves for flexible cables.
   Stripped length: 11 mm
4. Connect conductor N to the corresponding terminal with 3.5 – 4.0 Nm.
   Use wire end sleeves for flexible cables.
   Stripped length: 11 mm
5. Connect the power supply lines to the corresponding terminals L1, L2, L3 with 3.5 – 4.0 Nm.
   Use wire end sleeves for flexible cables.
   Stripped length: 11 mm
6. Mount strain relief clamps to the retaining rail (C-profile rail).
   The manufacturer recommends OBO clamping brackets (BBS clamps) matching the cable diameter.
7. Secure the infeed cover.
8. The operator must equip the cover with a seal.

Note

Electrical circuit diagram in the document compartment and for download

The electrical circuit diagram is located in the maintenance door in the document compartment of the SICHARGE charging station.

The electrical circuit diagram can be downloaded here (https://support.industry.siemens.com/cs/ww/de/view/109780588).

See also

Options available for orders (Page 116)

5.2 Optional equipment

Optional equipment

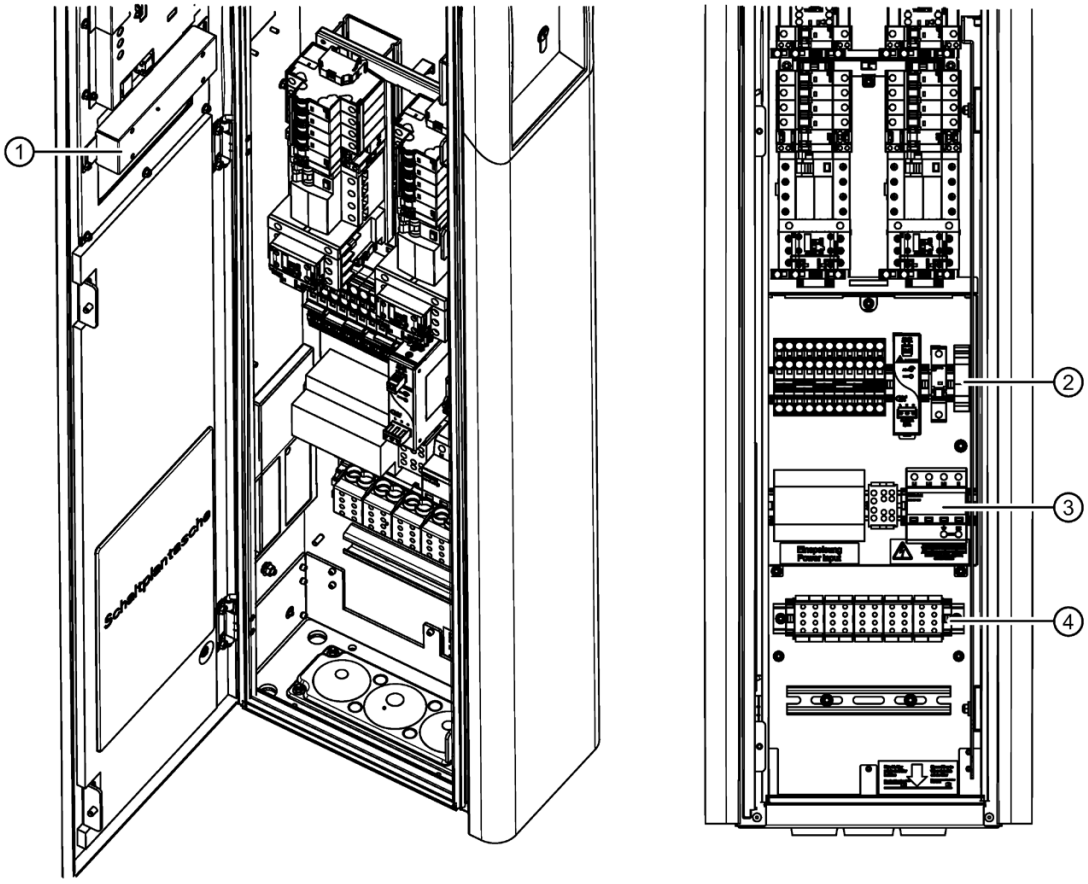

① Last Gasp
② Ethernet interface
③ Overvoltage protection or lightning protection
④ Double terminal

Figure 5-2 Order options

Last Gasp

The **Last Gasp** function is an option that can be ordered additionally.

This option includes an internal add-on module that does the following in the event of a power failure:

- Unlocks the charging cable
- Sends a fault message to the backend

Ethernet interface

An RJ45 socket for connecting a network cable is installed for the version with Ethernet interface. Use this Ethernet interface to connect to the backend via a standard router or switch. A mobile wireless connection is not possible with this version.

A conversion kit is available for converting systems with a 4G module. To do this, follow the instructions in the Repair instructions (https://support.industry.siemens.com/cs/ww/en/view/109793281). Section Spare parts (Page 113) includes the article number of the conversion kit.

You can find the overview of the various article numbers in the section Overview of article numbers (Page 111).

For technical specifications, see section Options available for orders (Page 116).

NOTICE
Network configuration and security standards Adhere to the IT security rules and IT security standards for the network configuration. Use a secured channel for communication to the OCPP server. • Encrypted connection, e.g. TLS • Websocket connection The operator of the charging station is responsible for protecting the infrastructure.

Connecting the network cable

Follow the steps below to connect the network cable:

1. Shorten the network cable to match the routing for strain relief and connection to the RJ45 socket.
2. Mount an RJ45 plug on the network cable according to the plug manufacturer's instructions.
3. Test the network cable with a suitable measuring instrument.
4. Insert the RJ45 plug into the Ethernet interface socket.
5. Attach the strain reliefs to the retaining rail (C mounting rail).

   The manufacturer recommends OBO clamps (BBS clamps) that match the cable diameter. These clamps are not included in the scope of delivery.

Overvoltage protection

If you have ordered the overvoltage protection option, an additional internal add-on module is installed.

This module is a 4-pin combination arrester with a remote signaling contact. It limits the follow-on current, displays errors, and outputs a trip notification via OCPP.

For technical specifications, see section Options available for orders (Page 116).

Lightning protection

If you have ordered the lightning protection option, an additional internal module is installed.

This module is a 4-pin combination arrester with a remote signaling contact. The combination arrester limits the follow-on current and dissipates the lightning energy via dedicated grounding. The combination arrester displays errors and outputs a trip notification via OCPP.

For technical specifications, see section Options available for orders (Page 116).

Double terminal

If you have ordered the optional double terminal for connecting a branch line, the double terminal is mounted and wired next to or underneath the PE terminal.

The main and branch lines are connected to this double terminal.

Operate a maximum of 2 SICHARGE charging stations on one mains supply.

5.3 SIM card

The charging station uses the SIM card to establish a connection to the backend. The SIM card used must be able to operate in a closed APN. Otherwise, the communication to the charging station is not secure.
To order SIM cards, you can select them in the order options. Another option is setting up in the factory with a connection test to the backend provider.

Requirement

When working on the SIM card, follow the instructions below:

1. Open the charging station
2. Disconnect the charging station from the mains
3. Check the activation
4. Put on ESD clothing and use an ESD grounding wrist strap connected to the protective conductor

Insert/remove SIM card

Follow the instructions below to insert or remove the SIM card:

1. Remove the two screws from the card cover of the charging controller

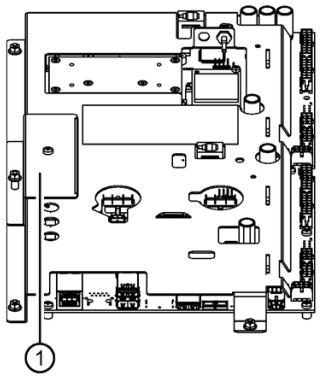

① Card cover

2. Remove the card cover from the charging controller
3. Insert the SIM card correctly into the SIM card slot or remove the SIM card

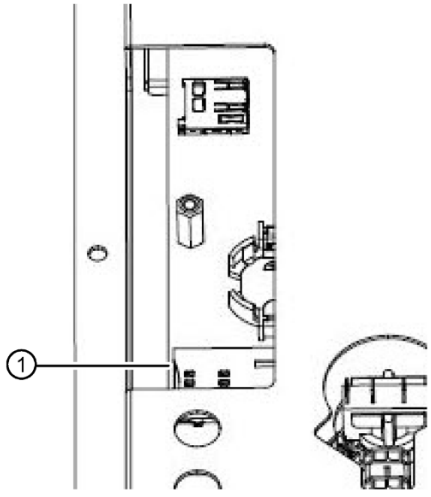

① SIM card slot

4. Fit the card cover of the charging controller

Note
Removed SIM card

The charging station can be operated without a SIM card only under certain conditions.

5. Switch on the power supply of the charging station

5.4 Switching on and testing

Procedure for switching on and checking the charging station.

Perform the following steps to switch on the charging station.

1. Switch the power supply on.
   Switch on the backup fuses, the load breaker switch and the RCCB.
2. Test run and approval:
   Carry out measurements according to the German occupational accident insurance association (DGUV) regulation 3, or according to the comparable regional regulations.

5.5 Commissioning

Procedure for setting up the charging station

Note

Option: Configuration and communication test

If you have selected the option for **customer-specific configuration including SIM card and communication test to the backend**, these settings have already been made at the factory.

Starting commissioning:

1. System configuration:
   A Web interface is available to you for system configuration. To do this, connect a laptop and the "RJ45 service interface" connection on the Charging controller (Page 26) with a patch cable.
   Check that the network settings of your Ethernet interface on the laptop are set to DHCP.
   Open a web browser. Enter the URL specified below in the address line of the browser.
2. Log in with the **admin** user and the system **password**.
3. Adjust the parameters according to the specifications of your provider and backend operator.

URL	User	Password
http://192.168.32.1	admin	<Serial number of the system>

The serial number of the system can be found on the rating plate (Page 19).

Change Password

We recommend changing the password during commissioning. Comply with current rules of applicable IT standards for creating and managing secure passwords.

NOTICE
Manage password Manage the new password carefully. The password cannot be reset or retrieved on site. The password can be reset via the backend.

1. Click the "admin" button
2. In the menu window, click the "User Profile" button.
3. Enter the old password in the "Old Password" field.
4. Enter the new password in the "New Password" field.
5. Enter the new password again in the "New Password (Repeat) field.
6. Click the "Save" button

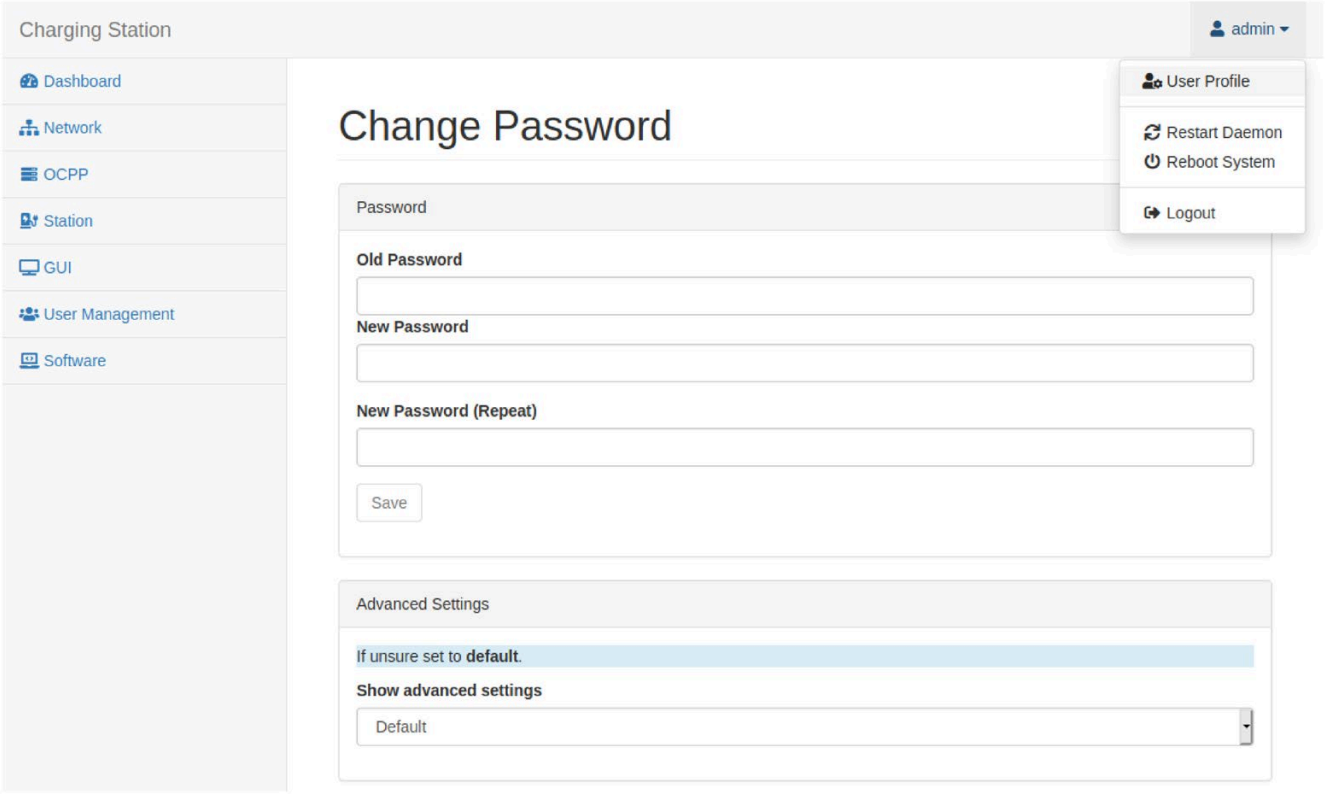

Figure 5-3 Change Password

Dashboard

The status of the connections is shown in tab **"Dashboard"**.

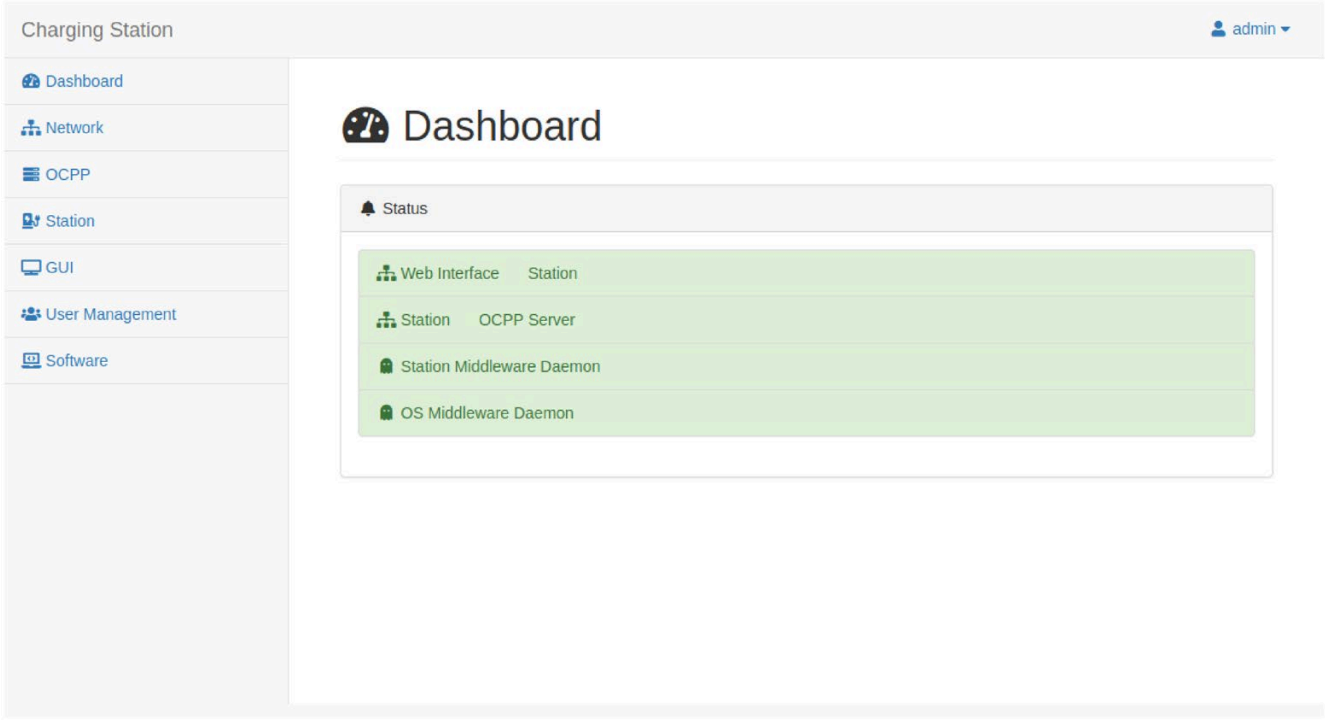

Figure 5-4 Dashboard

Network/Interfaces

Set the network connection in the **"Network/Interfaces"** tab.

Set the check mark at **"Use DHCP"** to reach the charging station with a name. Remove the check mark to enter the network settings.

For remote maintenance and updates, you must set the check mark for **"Enable VPN"** and enter the port setting.

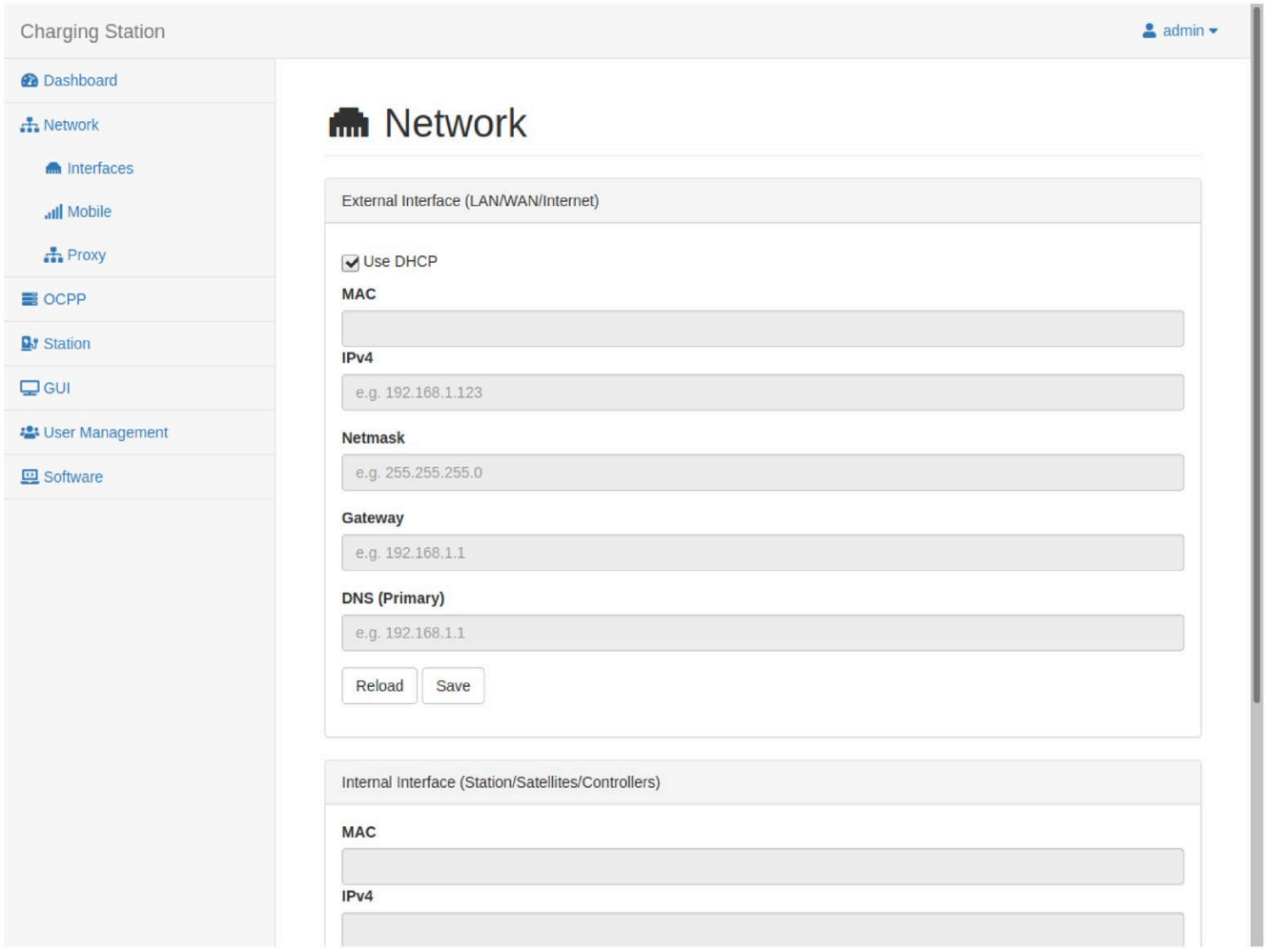

Figure 5-5 Network Interface

Network/Mobile

Set the SIM card provider setting in the **"Network/Mobile"** tab.

The provider data is displayed under **"Device"**.

In the drop-down menu under **"SIM Data"**, set the provider and the service mode according to the provider's specifications.

Note

SIM card

The SIM card must be operated in a closed APN. Otherwise, SICHARGE AC22 is vulnerable and a sustainable connection cannot be guaranteed. Should you have any questions, contact the relevant Siemens branch.

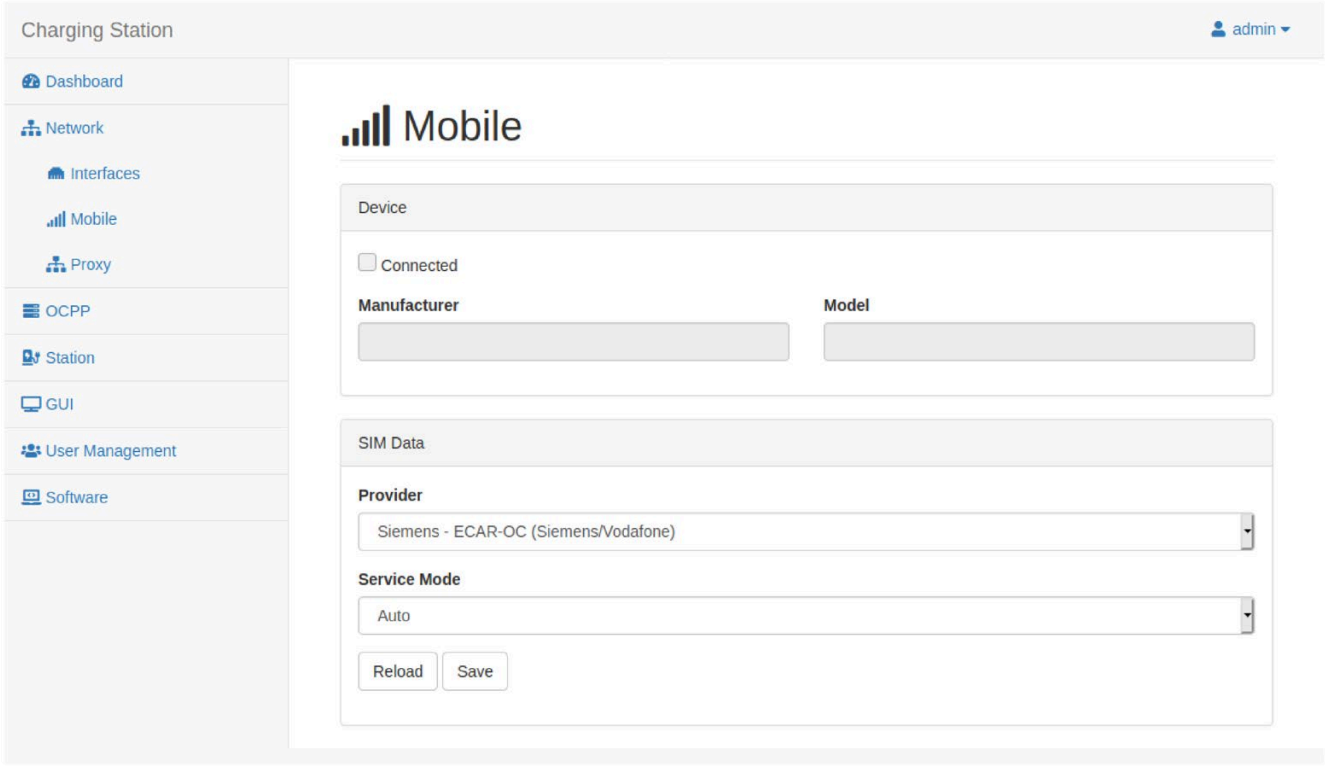

Figure 5-6 Network Mobile

Network/Proxy

Set the proxy connection in the **"Network/Proxy"** tab.

Set the check mark at **"Use Proxy"** to install the system behind a proxy server. Now, enter the proxy data in these fields. Enter proxy credentials in the **"User"** and **"Password"** fields.

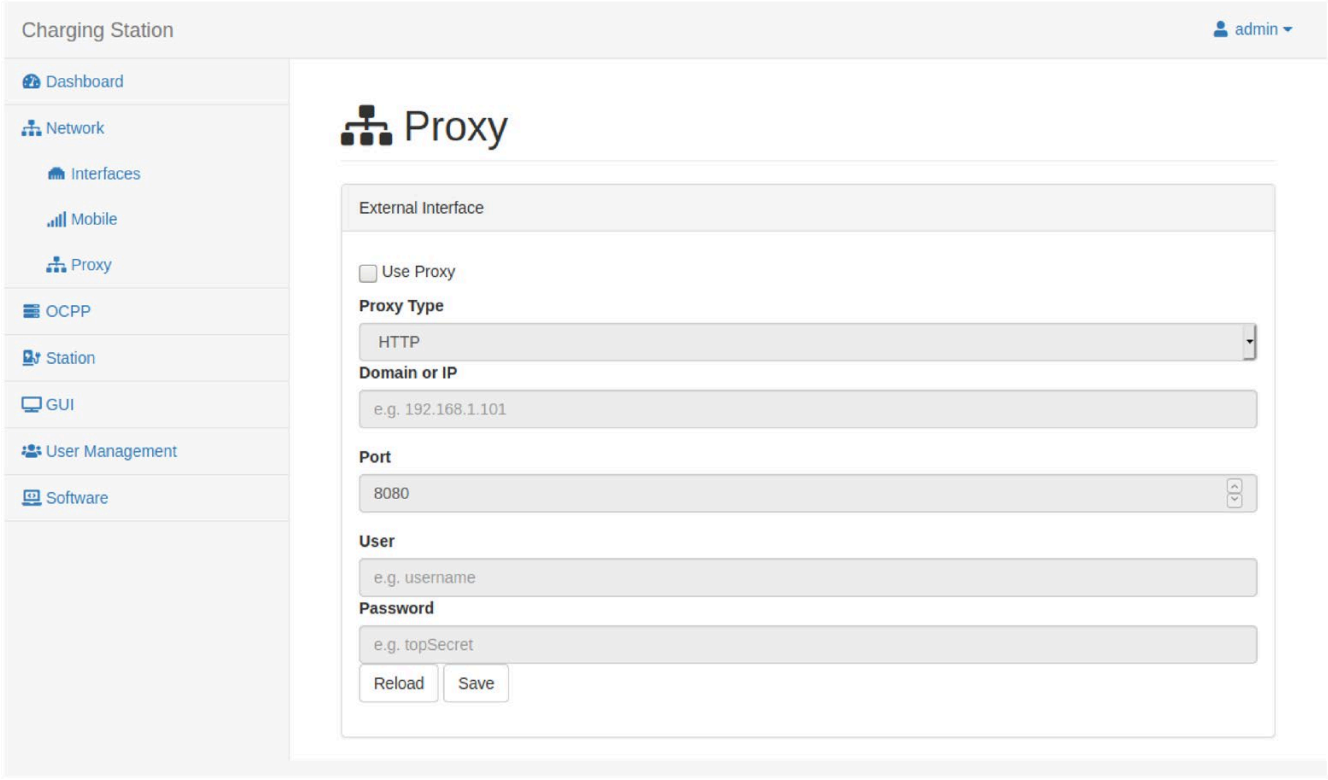

Figure 5-7 Network Proxy

OCPP

Set the operator in the **"OCPP"** tab.

In the **"Operator"** drop-down menu, you can choose a preset variant.

When **"(custom)"** is selected, the fields must be filled according to your backend settings. This is shown in the 2nd picture.

The gray Chargebox ID field shows the charging station ID.

You do not need to change anything in the **"Chargebox ID (Template)"** field. If the backend requests the Chargebox ID, enter this separately in the **"Chargebox ID (Template)"** field.

Enter the authorization key provided by the backend in the **"Authorization Key"** field.

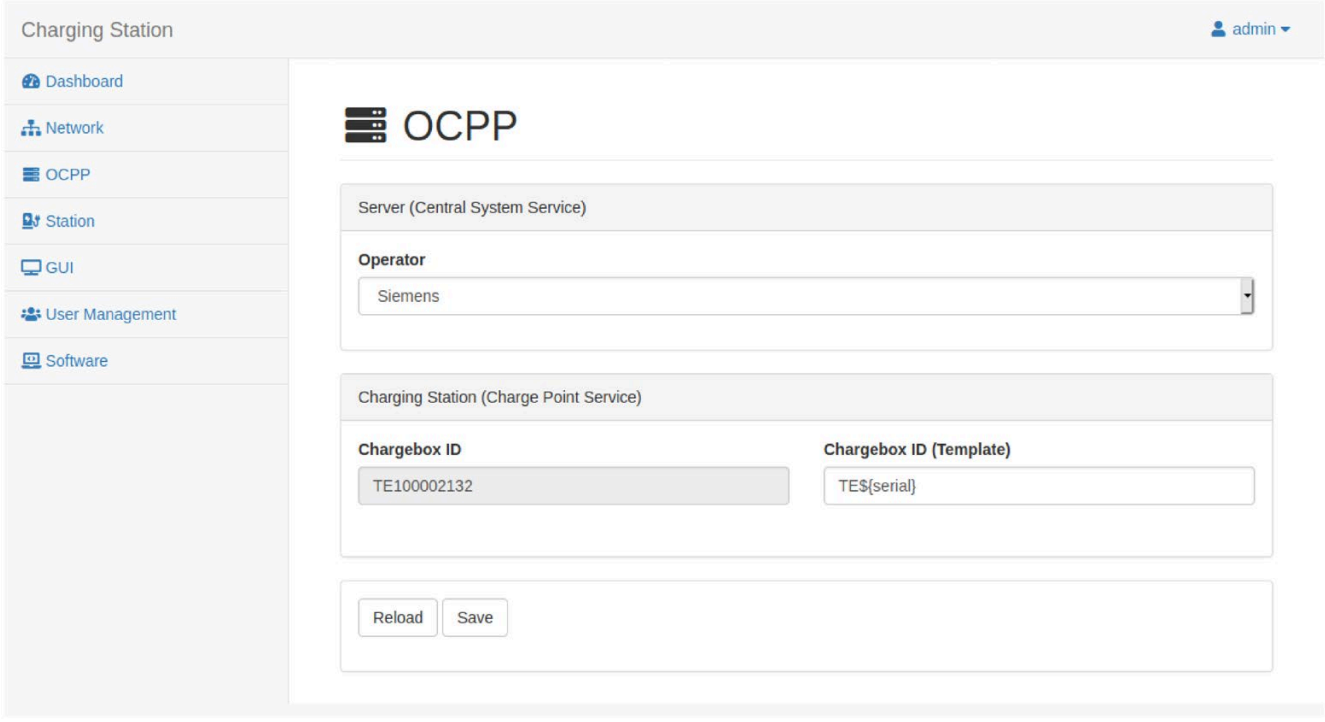

Figure 5-8 OCPP Siemens

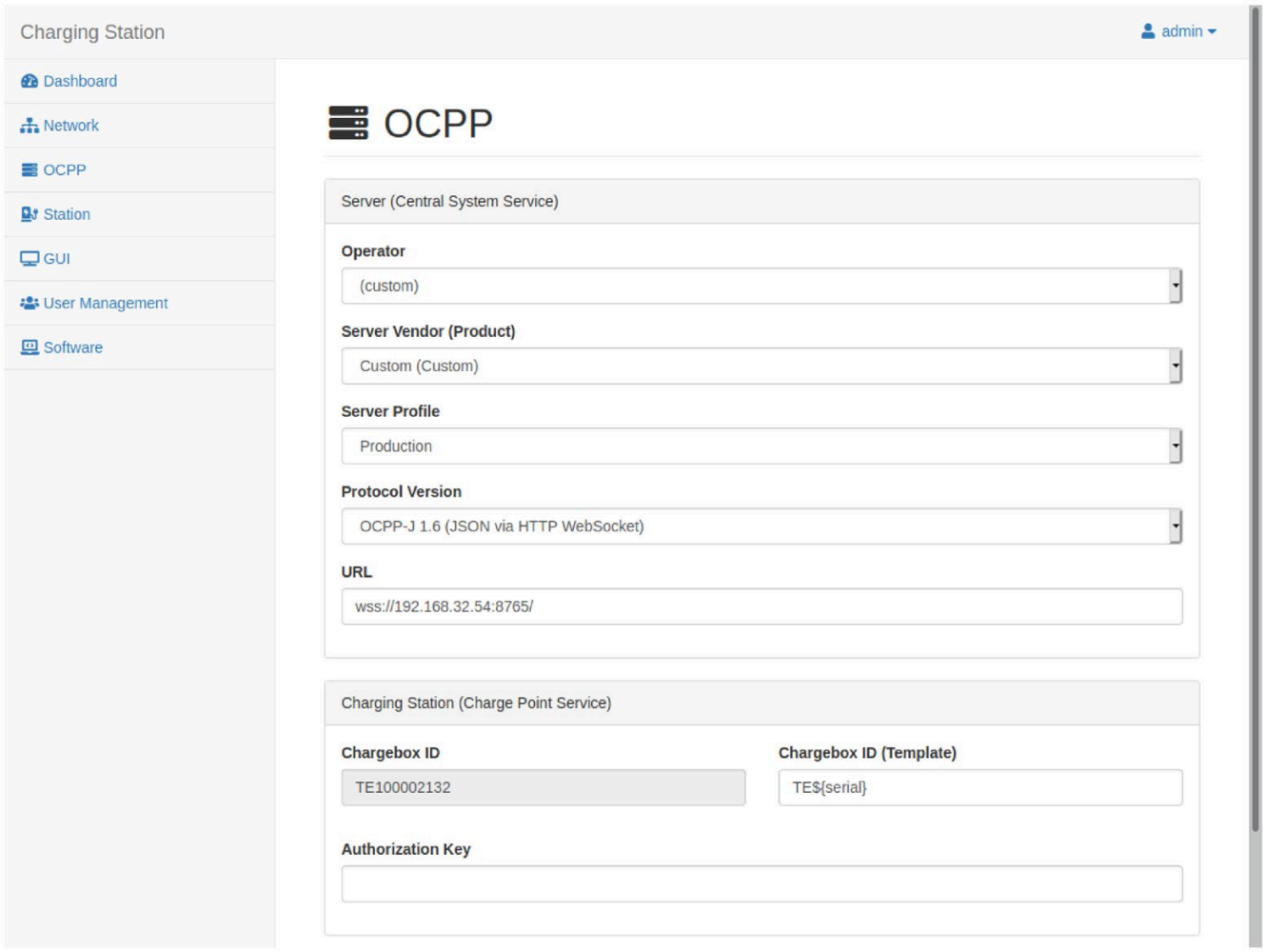

Figure 5-9 OCPP custom

Station/Date/Time

Set the time zone and the synchronization in the **"Station/Date/Time"** tab.

If you check the **"Timezone"** box, the time zone of your browser is automatically applied. Clear the check box to select the time zone in the drop-down menu.

In the area of **"Synchronize date and time via"**, set the check mark for **"NTP"** for time updates via the network.

The check mark for **"OCPP (HeartBeat)"** updates the time using the so-called "keep-alive bit" in the connection to the OCPP.

The check mark for **"Browser (only once)"** means that the browser time is only set once during commissioning and is no longer synchronized/updated.

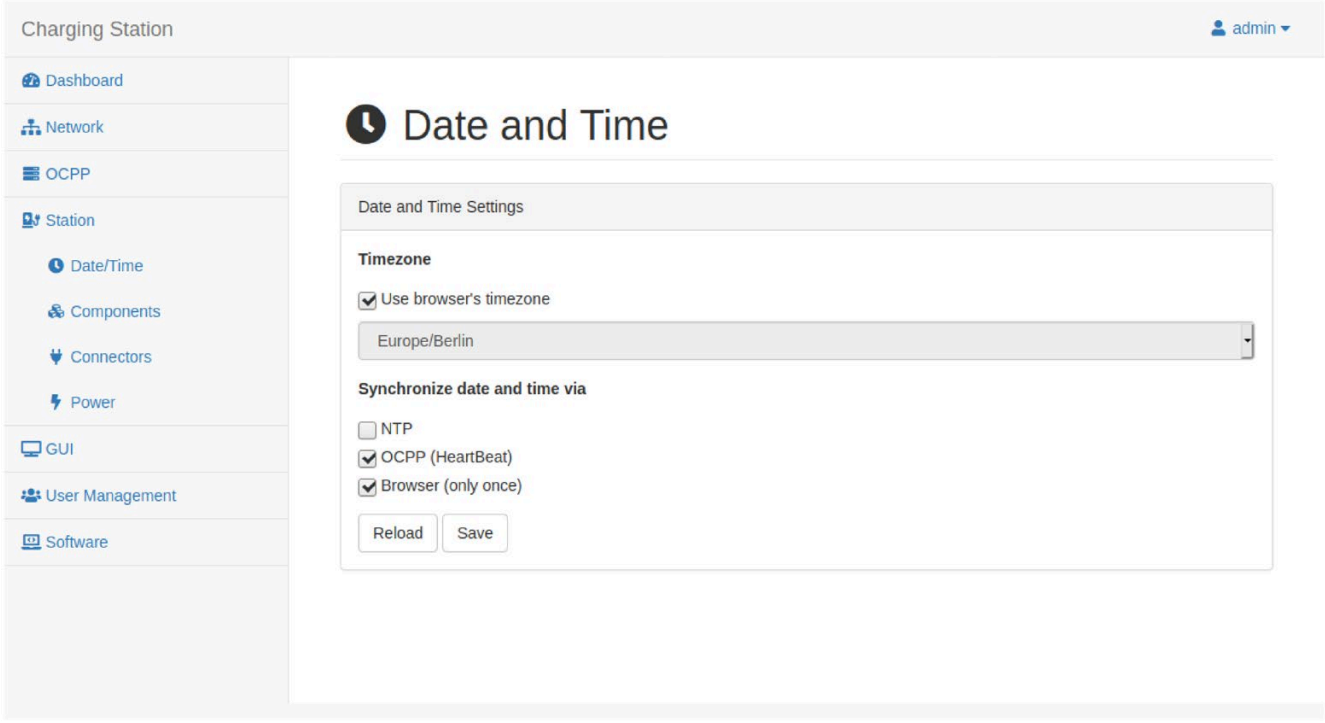

Figure 5-10 Station Date and Time

Station/components

Carry out a firmware update in the **"Station/components"** tab.

NOTICE
Overwriting firmware Ensure that the charging processes have been completed properly before overwriting the firmware.

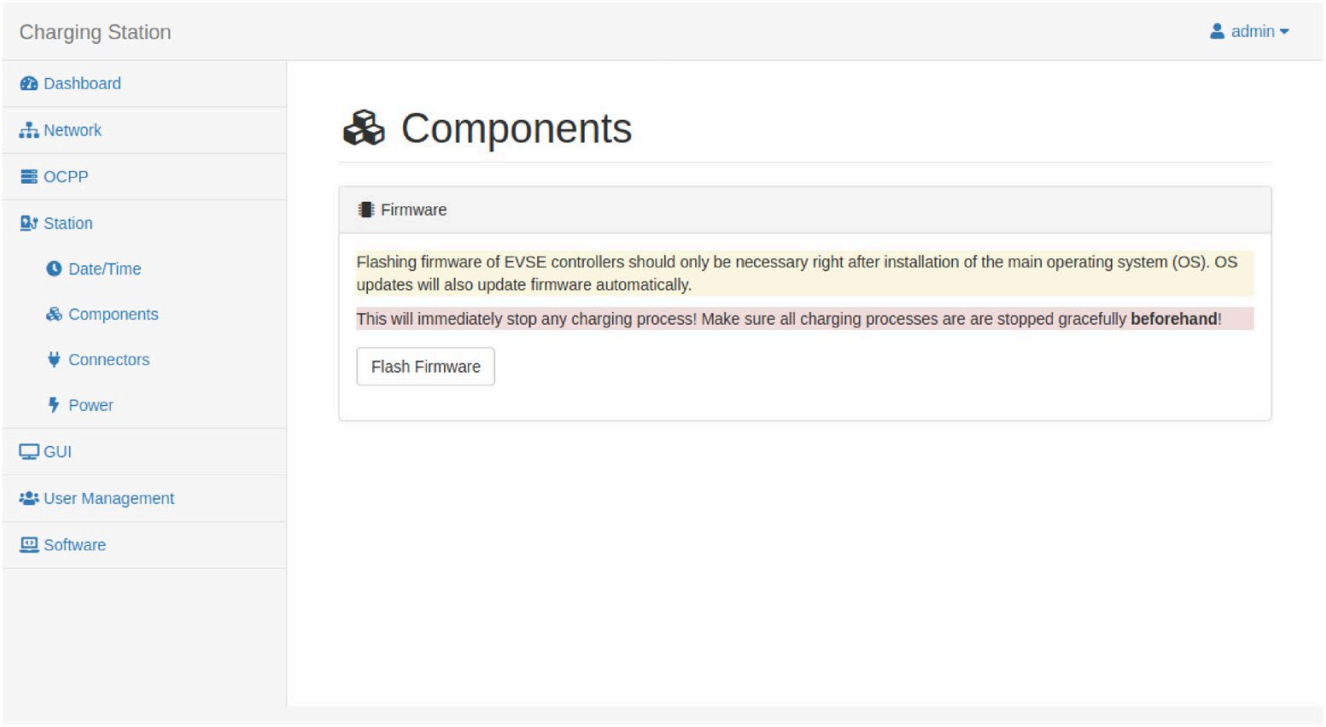

Figure 5-11 Station Components

Station/Connectors

The tab **"Station/Connectors"** has the following items:

Points	Status	Meaning
EVSE	✓	Electric Vehicle Supply Equipment
ID	✓	Identification of the charging point
Type	✓	Charging point type
Hardware ID	✓	Hardware identification number
Firmware	✓	FW version of the charging point controller
URL	✓	Shows the URL address connected to the charging point.
Initialized		Shows the initialization status of the charging point.
Enabled		Enable for each charging point
Configured	✓	Indicates whether the charging point is configured
Plugged	✓	Charging cable connected at both ends
Locked		Charging cable locked at charging station
Charging	✓	Charging active
RCCB	✓	Residual current circuit breaker has not tripped
Meter	✓	Meter type
Serial	✓	Meter serial number
Valid	✓	Meter valid/confirmed
Value (Wh)	✓	Meter status
Max. Current Out	✓	Max. output current in mA
Max. Current Cable	✓	Max. cable current in mA
Max. Current Granted	✓	Max. enabled current in mA
Max. Current In	✓	Max. input current in mA

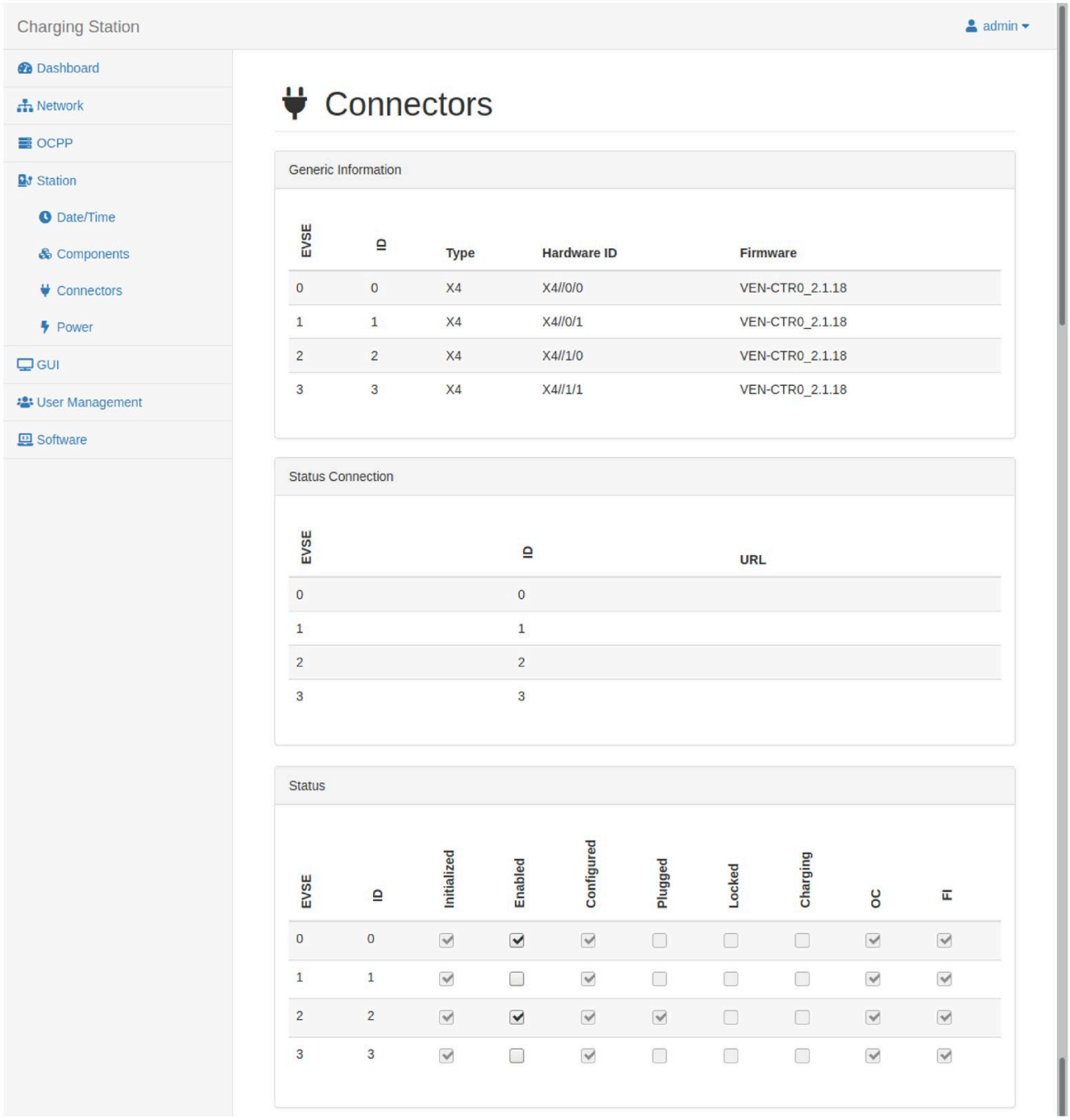

Figure 5-12 Station Connectors1

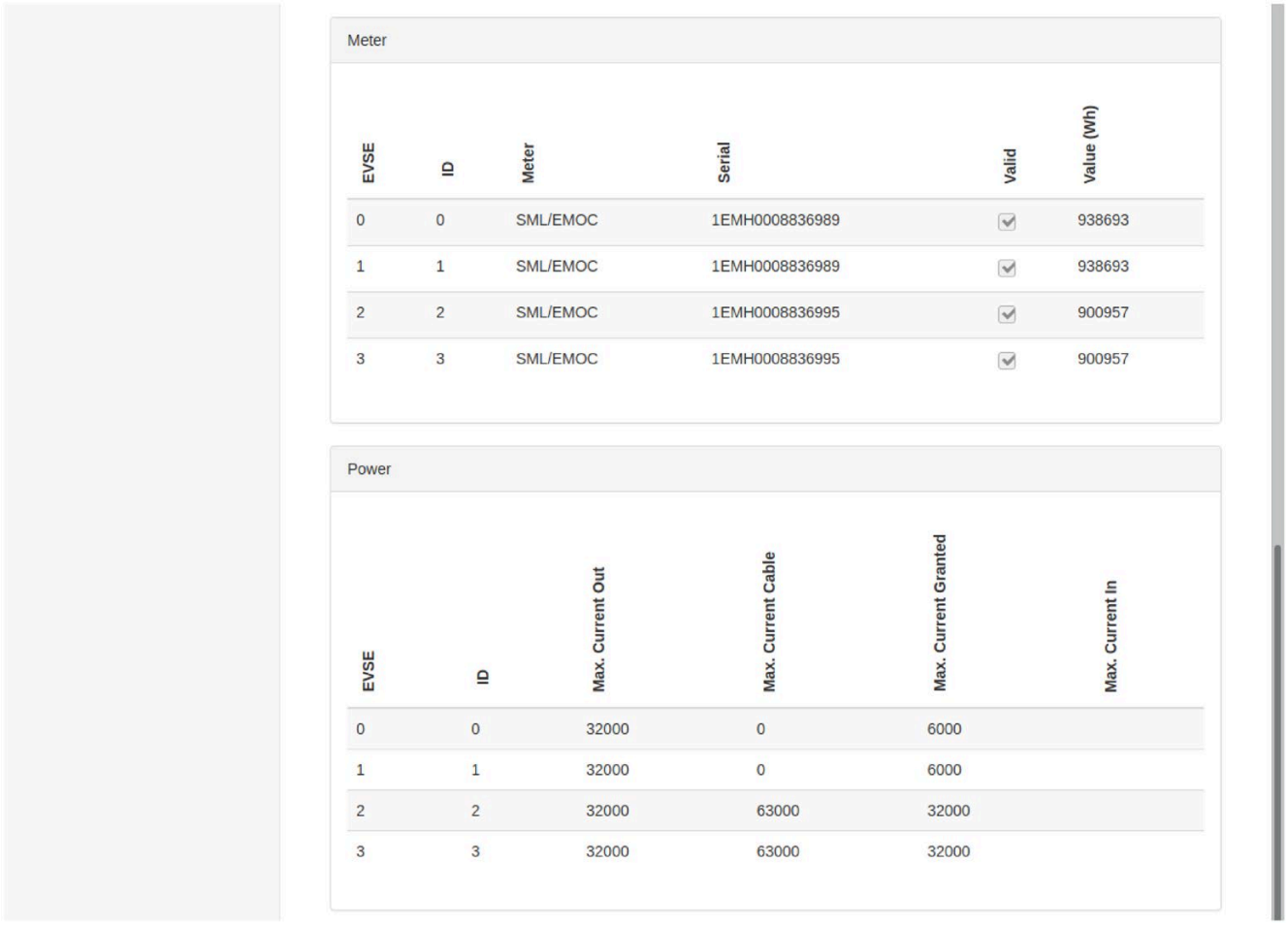

Meter

EVSE	ID	Meter	Serial	Valid	Value (Wh)
0	0	SML/EMOC	1EMH0008836989	☑	938693
1	1	SML/EMOC	1EMH0008836989	☑	938693
2	2	SML/EMOC	1EMH0008836995	☑	900957
3	3	SML/EMOC	1EMH0008836995	☑	900957

Power

EVSE	ID	Max. Current Out	Max. Current Cable	Max. Current Granted	Max. Current In
0	0	32000	0	6000	
1	1	32000	0	6000	
2	2	32000	63000	32000	
3	3	32000	63000	32000	

Figure 5-13 Station Connectors2

Station/Power

WARNING

Entering the maximum current for each outer conductor

Only a qualified electrician can make an entry in this field.

Enter the maximum available current for each phase in mA for the charging station. The value must not exceed the rated current of the back-up fuse.

When operating two SICHARGE charging stations on one backup fuse:
The sum of maximum currents of the two SICHARGE charging stations must not exceed the rated current of the backup fuse.

Setting values:

- Min. = 6000 mA
- Max. = 63000 mA or rated current of the back-up fuse if the back-up fuse is less than 63 A

Pressing the **"Save"** button saves the entry in the charging station.

Use **"Reload"** button to retrieve and display the value from the charging station.

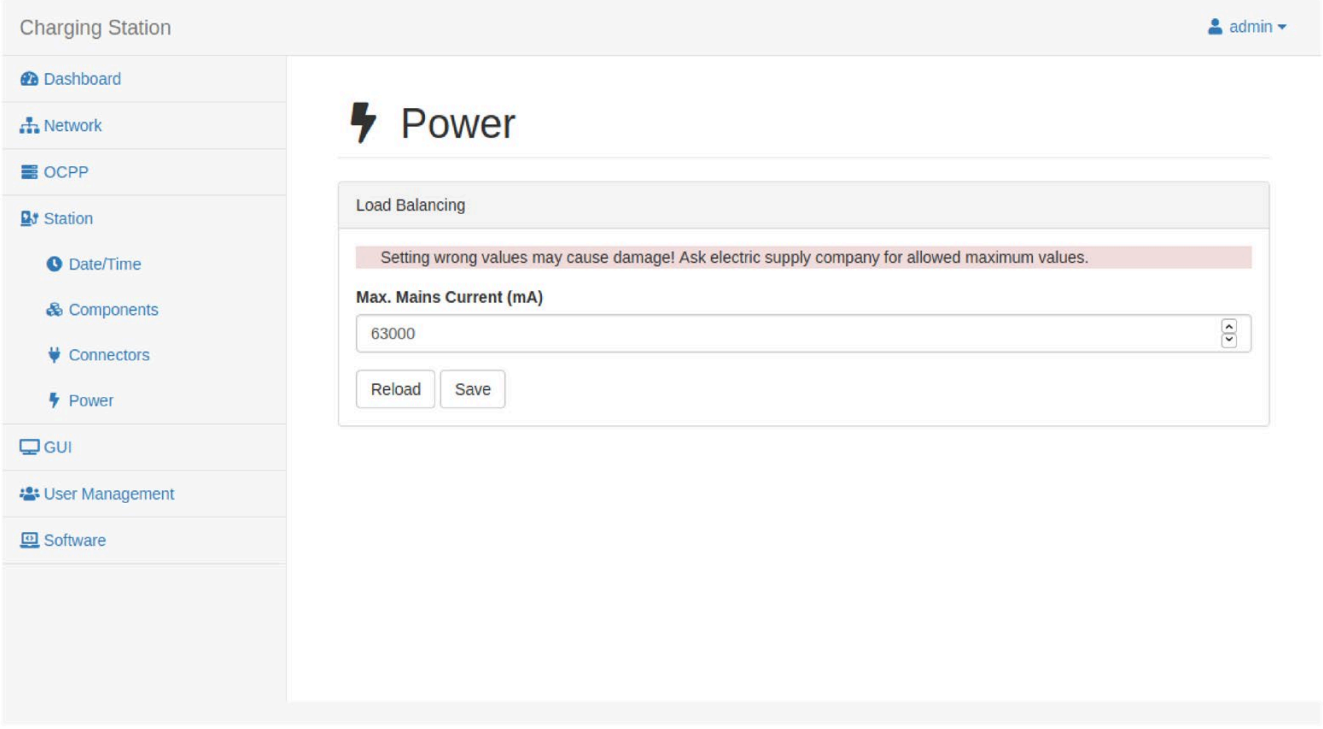

Figure 5-14 Station Power

GUI/Branding

Set the HMI displays in the **"GUI/Branding"** tab.

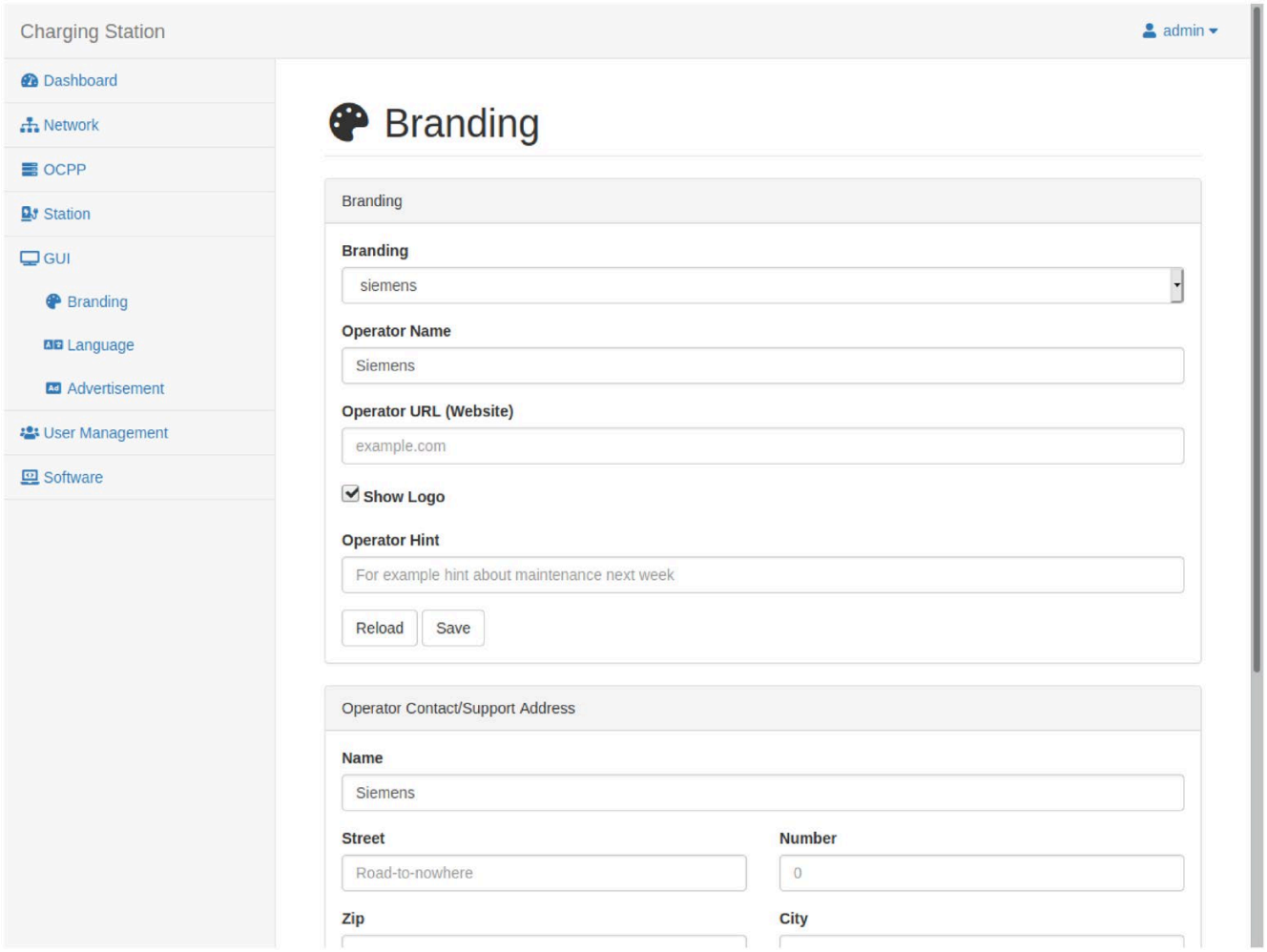

Figure 5-15 GUI Branding

Language

Select the language of the HMI display in the **"Language"** tab.

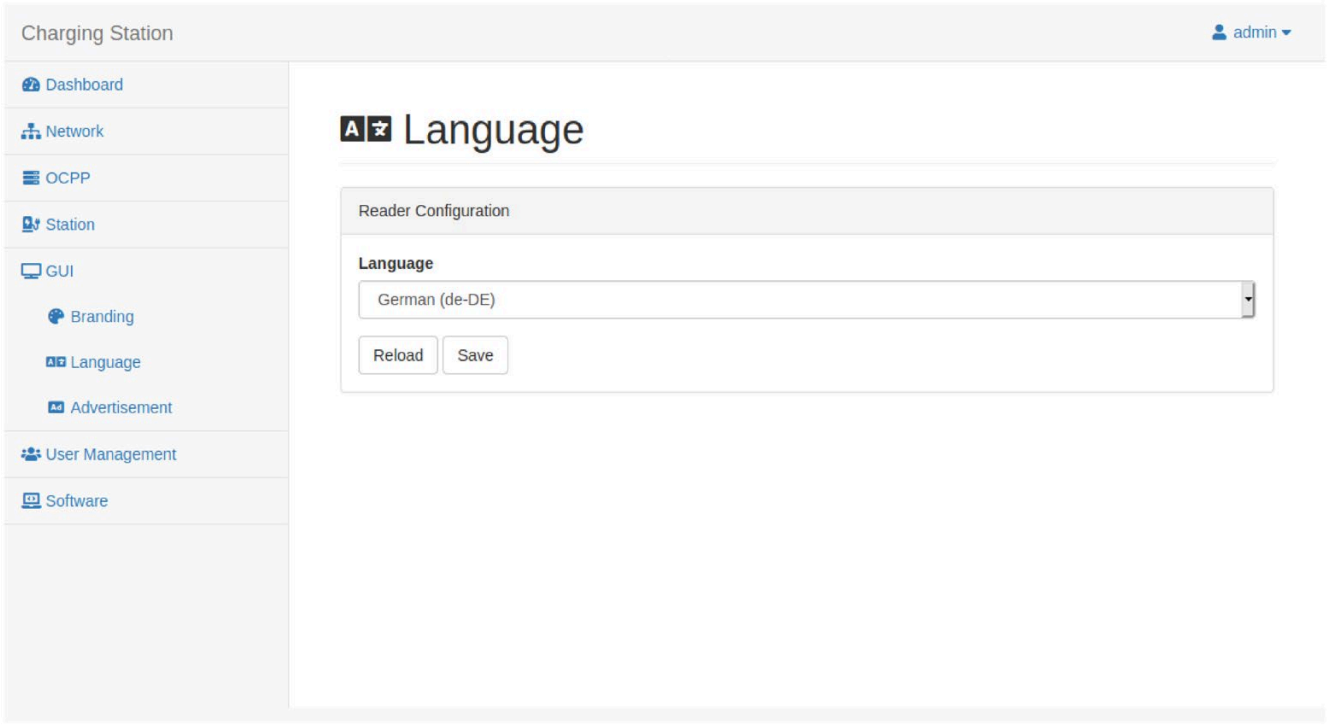

Figure 5-16 GUI Language

Advertisement

Set up HMI advertising in the **"Advertisement"** tab.

Select the provider if it does not correspond to the backend.

Enter the URL, user and password for the advertisement.

Set the update interval for the advertising file in **"Data Synchronization"**.

Set the time until advertising begins in **"Display Timeout"**.

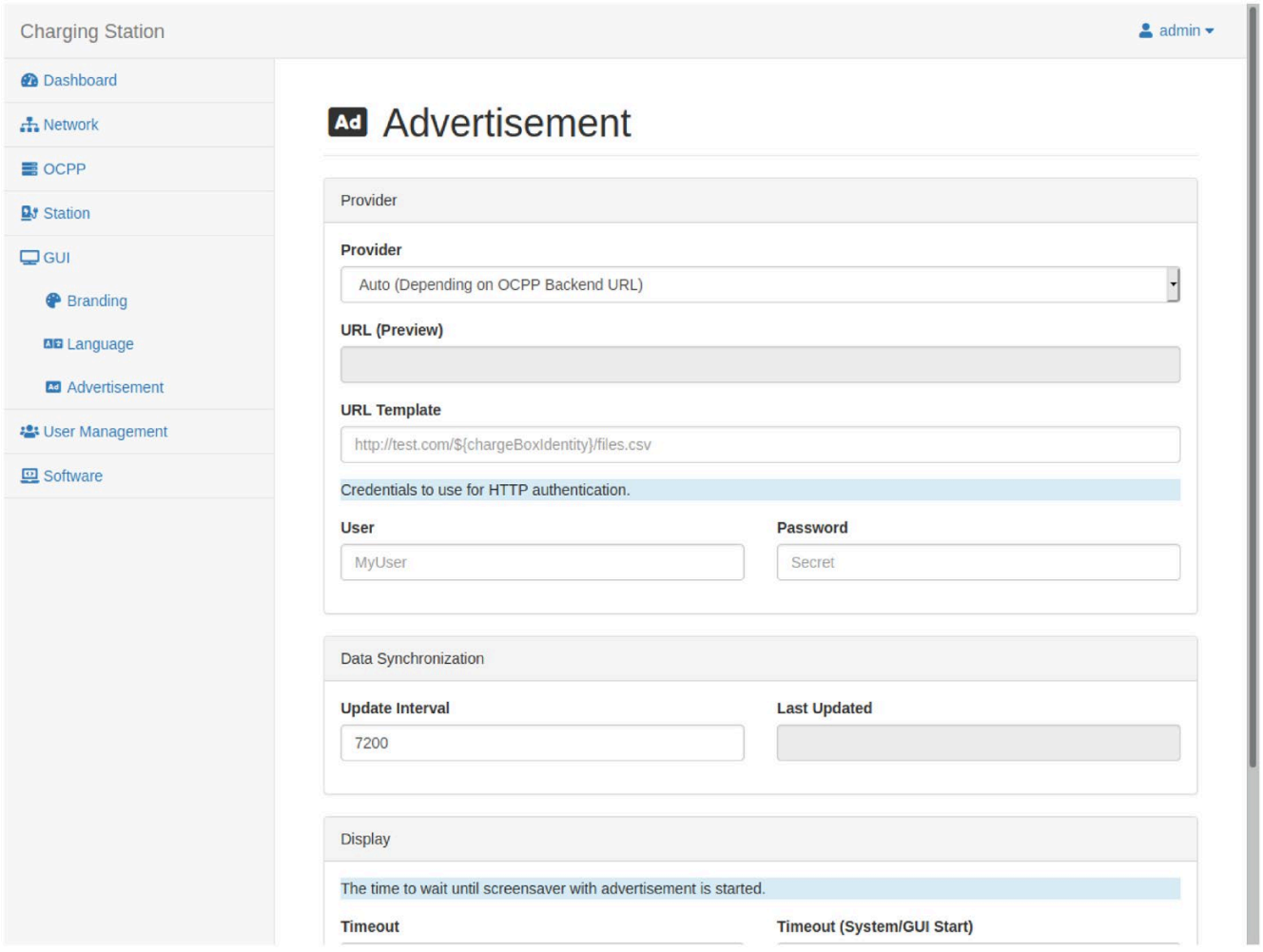

Figure 5-17 GUI Advertisement

Authentication

Set the authentication in the **"User Managment/Authentication"** tab.

Selection	Meaning
? any RFID	If recognized, use any RFID.
x no RFID	Do not use RFID in any check.
✓ a white-listed RFID	Use the whitelist when checking the RFID.

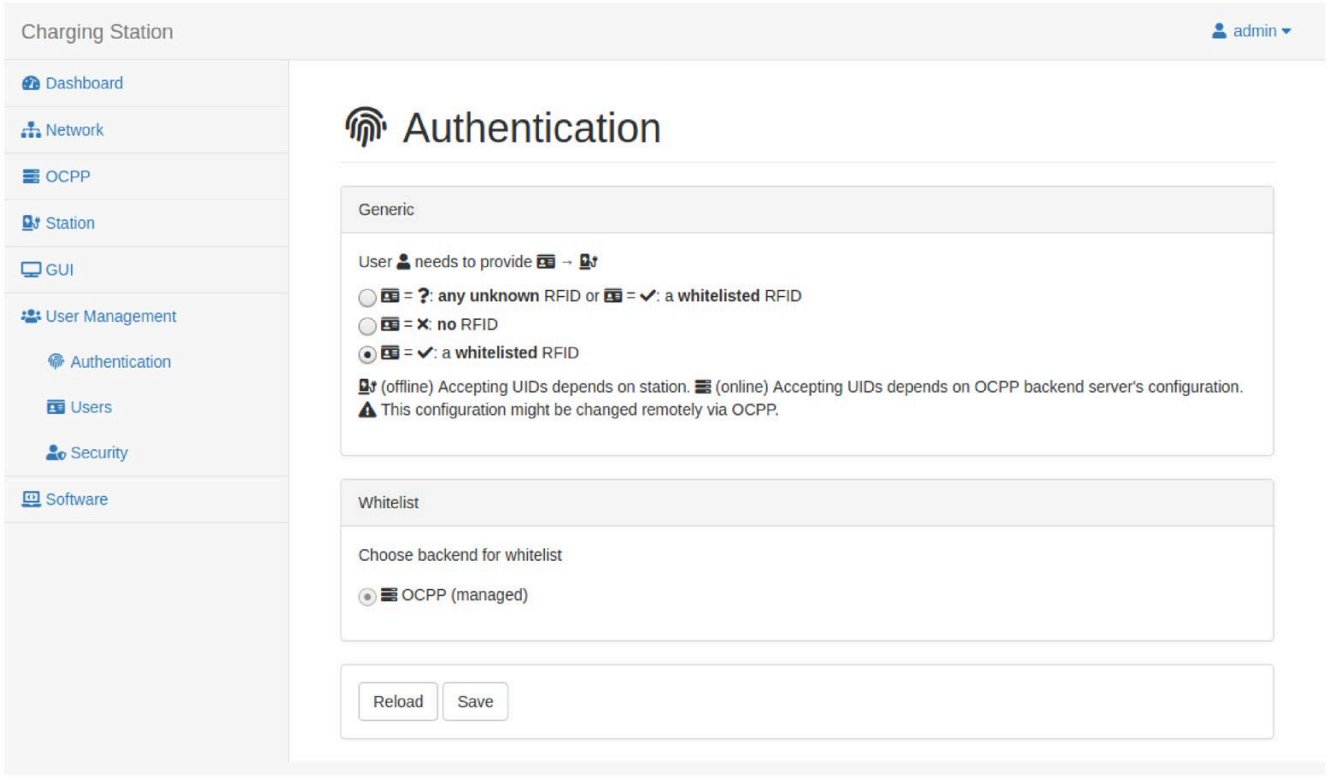

Figure 5-18 User Management Authentication

Users (RFID Cards)

Tab **"User Managment/Users (RFID Cards)"** provides an overview of customers. In this tab, you can change the status of the customer.

Click on the respective icon to change the status of a customer between active / inactive and valid / invalid.

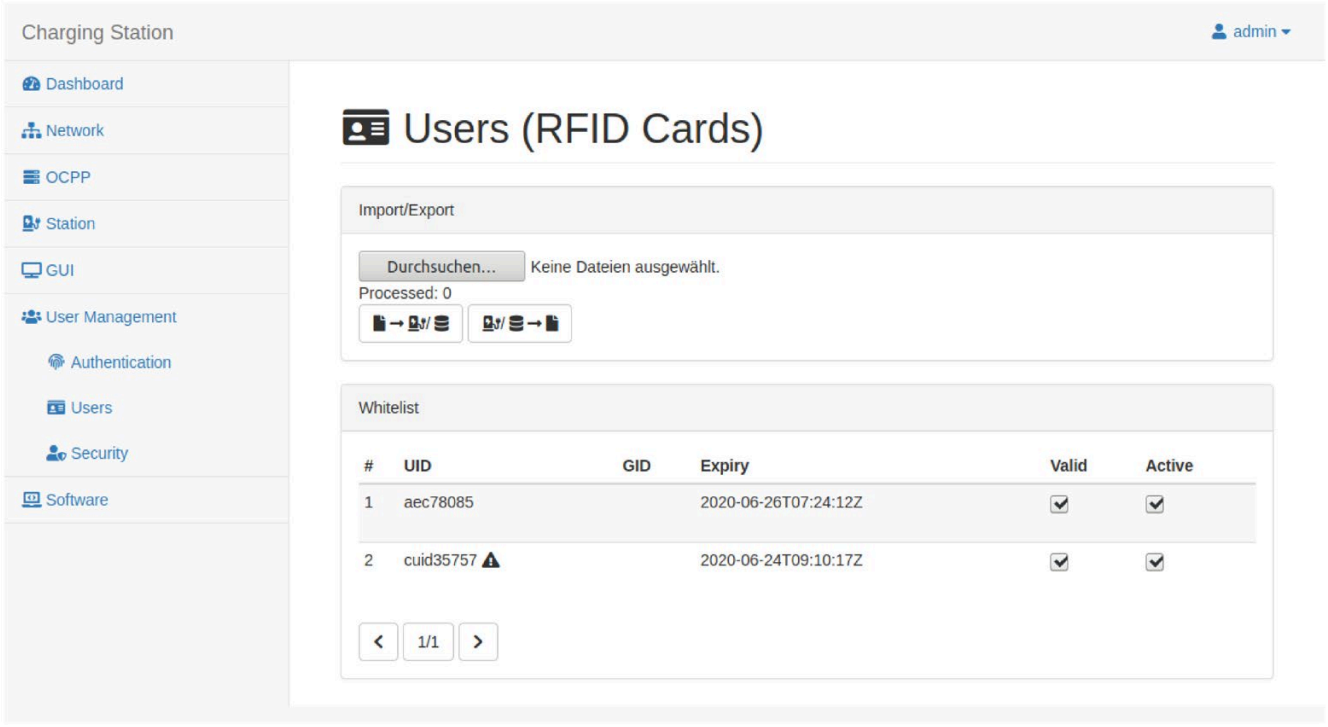

Figure 5-19 User Management Users

Software

The **"Software"** tab displays the currently installed software of the charging station.

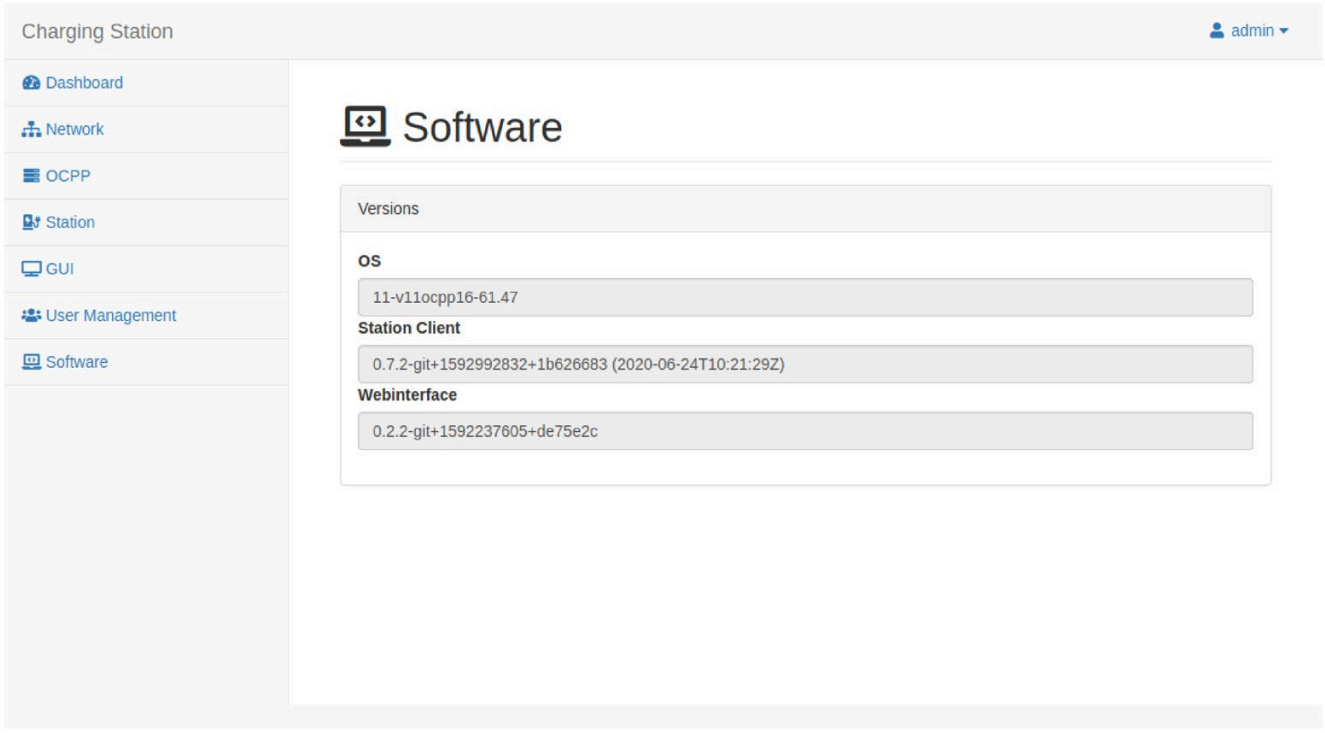

Figure 5-20 Software

Concluding commissioning

1. Disconnect the Ethernet cable from the charging station.
2. Seal the cover plates.
3. Lock the housing door with the key.
4. Remove the packing material and protective films.
5. Clean the unit if required.
6. Complete the commissioning report in accordance with DGUV regulation 3.

Note

The SICHARGE CC AC22 charging stations are designed for continuous operation. Daily reboots (power cycle) may affect the service life of the components.

Operation

6

6.1 Status indicators

Notes on operation

The SICHARGE CC AC22 charging station is equipped with status indicators. Different colors and flashing signals indicate the current status of charging points 1 and 2. This signalizes to drivers if the charging station is available and what its status is.

The display also directly shows the required information.



① Status LED charging point 1
② Status LED charging point 2

Figure 6-1 Status indicators of the charging station

Status indicators

The following table provides an overview of status indicators of charging points:

	Does not light up	If the status indicator does not light up, this indicates an interruption to the power supply. If there is not a power failure, check the backup fuses.
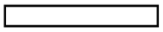	Lights up white	The controller is deactivated. The charge point is not available.
	Flashing white	Controller has been started. The charge point is not available at the moment.
	Lights up green	Charging of vehicles is possible.
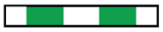	Flashes green	No cable plugged in. Charging point is signing charging process.
	Lights up yellow	The charging point is connected to the vehicle. No charging in progress.
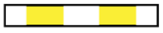	Flashes yellow	A cable is plugged in. No authorization for charging, because charging station is still in the signing process.
	Pulsating blue light	Charging process active: The connected vehicle is receiving power.
	Lights up blue	Charging inactive: The connected vehicle is not drawing any power.
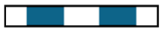	Flashing blue	Meter data for the charging process are being signed.
	Flashes red 1x	• EVSE connection error • EV connection error • Excess temperature
	Flashes red 2x	Main contactor
	Flashes red 3x	Circuit breaker (CB) has tripped
	Flashes red 4x	The residual current circuit breaker (RCCB) has tripped
	Flashes red 5x	Connector lock error
	Flashes red 6x	Meter error
	Flashes red 7x	Vehicle error: Mode 3 unknown status
	Flashes red 10x	SD card error

6.2 Main menu

Symbols in the main menu

When you switch on the charging station, you will see the following picture on the display.

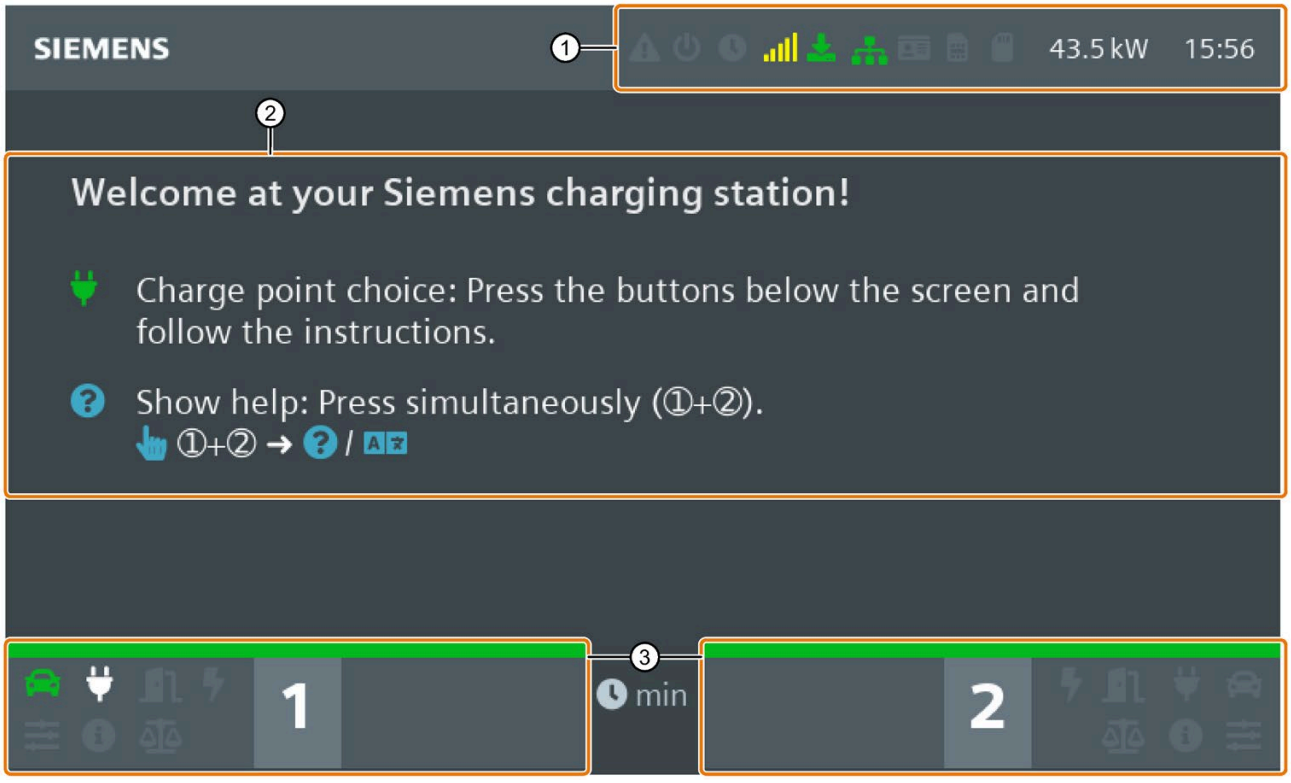

① Charging station and connection status
② Display of instructions
③ Charging point indicator

Figure 6-2 Main menu

Table 6- 1 Symbols of the charging station and connection status

	Hardware fault
	Charging point status
	Charging station reserved
	Mobile network reception, network strength
	Mobile reception, data connection (GSM, 2G, 3G, LTE)
	Connection to the OCPP backend
	RFID card reader
	SIM card (controller)
	Micro SD card

Table 6- 2 Symbols of the charging point indicators

	Charging point number
	Active meter (value/status)
	Identification (meter)
	Vehicle status
	Plug status
	Charge point cover
	Charging status
	Circuit breaker status
	Meter status
	Available power
	Query to the meter

The symbols are explained in the help menu. You can access the help menu by pressing both buttons simultaneously or by pressing one button for a long time.

Color scheme for the status bar

Green	OK / active
Yellow	Warning / issue
Red	Error
Gray	Inactive / unused
White	Availability / status

6.3 Charging process

6.3.1 Start charging

Safety instructions during the charging process

⚠ DANGER

Risk of electric shock and fire

Touching live parts may cause electric shock or even death! Defective connectors or cables may cause fire.

- Do not kink or squeeze the charging cable. Do not draw the charging cable over sharp edges or hot surfaces.
- Do not use the charging station if dangerous damage or tampering is visible. Inform the operator. Keep yourself and other persons away from the charging station.
- Grip the power plug to pull the charging cable out of the socket. Do not grip by the cable itself.
- Never touch the mains plug with wet hands.
- Do not connect or disconnect any cables during a thunderstorm.

⚠ DANGER

Risk of overheating and fire

Using unauthorized accessories increases the risk of fire due to overheating.

- Only use a charging cable approved for the vehicle.
- Do not use an extension to connect the charging station to the vehicle.
- Adapter and adapter cable are not permitted.

⚠ CAUTION

Risk of accident

Ensure that the charging cable does not block any escape route or constitute a tripping hazard. In this case, the cable becomes an obstacle that can lead to injuries. The cable could also be ripped out from the anchoring and cause damage to the vehicle or the charging station.

Start charging with RFID or app[1]

Proceed as follows to start charging:

1. Check if the required charging point is ready for operation: The status LED must light up green.
2. You will see the following instruction on the display: "Press the button below the display and follow the instructions".
3. Use the left or right pushbutton to select the desired charging point.
4. If the RFID function is activated on your device (configuration via web interface or backend), hold your RFID card in front of the card reader.
5. Depending on the configuration (configuration via web interface or backend) of your device, the software will now check your authorization to charge a vehicle.
6. The charging station now unlocks the cover lock.
7. Plug the plug connector of the charging cable into the power outlet of the charging station. Make sure that the charging cable and the connecting cables are not damp or dirty. Follow also the instructions of the vehicle manufacturer.
8. The communication connection to the vehicle is established. The status indicator changes from yellow to blue. This process can take some time depending on the backend connection speed and reaction speed.
9. The device locks the plug into the socket.
10. After successfully locking the connector, the charging process starts automatically and the status indicator pulsates blue. The vehicle is now being charged. The connectors are still protected against unauthorized removal.
11. The display informs about the current charging status.
12. The vehicle is fully charged as soon as the status indicator changes from flashing to permanently lit.

The status LED pulsating in blue indicates that current is flowing to the vehicle and the vehicle battery is charging. The status LED lights up permanently in blue in the following cases:

- The vehicle is not drawing current.
  - The charging station pauses, for example, because of load management
  - The vehicle pauses the charging
- The charging of the vehicle battery is completed.

[1] A third-party app is not included in the charging station's scope of certification and is not covered by the prototype test certificate. The operator has to ensure that operation is compliant with calibration laws.

Start charging with Giro-e function

Requirement:

The Giro-e function is enabled on the device. (Configuration via web interface or backend)
Additional information about Giro-e is available here (Page 128).

Proceed as follows to start charging:

1. Check if the required charging point is ready for operation: The status LED must light up green.
2. You will see the following instruction on the display: "Press the button below the display and follow the instructions".
3. Use the left or right pushbutton to select the desired charging point.
4. Place your debit card in front of the card reader until it has been verified. This may take a few seconds.
   The color of the card icon changes to green after successful verification.
5. The current price and the SEPA ID (pUID) are now visible in the display. For example, EINZUG AA11111T6w
   Write down the SEPA ID (pUID) to check the posting to your account. Additional information about the SEPA ID (pUID) and Giro-e is available here (Page 128).
6. Confirm the prices by verifying the debit card once again. Place your debit card once again in front of the card reader until it has been verified. This may take a few seconds.
   The color of the card icon changes to green after successful verification.
7. Depending on the configuration (configuration via web interface or backend) of your device, the software will now check your authorization to charge a vehicle.
8. The charging station now unlocks the cover lock.
9. Plug the plug connector of the charging cable into the power outlet of the charging station. Make sure that the charging cable and the connecting cables are not damp or dirty. Follow also the instructions of the vehicle manufacturer.
10. The communication connection to the vehicle is established. The status indicator changes from yellow to blue. This process can take some time depending on the backend connection speed and reaction speed.
11. The device locks the plug into the socket.
12. After successfully locking the connector, the charging process starts automatically and the status indicator pulsates blue. The vehicle is now being charged. The connectors are still protected against unauthorized removal.
13. The display informs about the current charging status.
14. The vehicle is fully charged as soon as the status indicator changes from flashing to permanently lit.

The status LED pulsating in blue indicates that current is flowing to the vehicle and the vehicle battery is charging. The status LED lights up permanently in blue in the following cases:

- The vehicle is not drawing current.
  - The charging station pauses, for example, because of load management
  - The vehicle pauses the charging
- The charging of the vehicle battery is completed.

6.3.2 Completing the charging process

Safety instructions during the charging process

⚠ DANGER

Risk of electric shock and fire

Touching live parts may cause electric shock or even death! Defective connectors or cables may cause fire.

- Do not kink or squeeze the charging cable. Do not draw the charging cable over sharp edges or hot surfaces.
- Do not use the charging station if dangerous damage or tampering is visible. Inform the operator. Keep yourself and other persons away from the charging station.
- Grip the power plug to pull the charging cable out of the socket. Do not grip by the cable itself.
- Never touch the mains plug with wet hands.
- Do not connect or disconnect any cables during a thunderstorm.

⚠ CAUTION

Risk of accident

Ensure that the charging cable does not block any escape route or constitute a tripping hazard. In this case, the cable becomes an obstacle that can lead to injuries. The cable could also be ripped out from the anchoring and cause damage to the vehicle or the charging station.

Completing the charging process

Your vehicle is being charged as long as the light pulsates in blue. Charging is complete when the light of the status indicator is constant.

You can stop charging at any time.

You have three different options to end charging:

Procedure with RFID card or debit card

1. Charging point selection: Press the pushbutton below the display and follow the instructions.
2. Place the RFID card or debit card on the icon for the card reader until the card has been verified. This may take a few seconds.

   The color of the card icon changes to green after successful verification.
3. The display shows: STOP CHARGING. Charging stops.
   The status indicator changes from blue to yellow.
4. The charging cable is now unlocked. Remove the charging cable.
5. Also unplug the connector from the socket of your electric vehicle. Stow away the provided charging cable. To do this, follow the instructions in the manual for your vehicle.

Procedure with operator app[1] or operator hotline

1. Charging point selection: Select your vehicle or the charging point by the operator.
2. Unlock the charging cable on the charging station.
   The status indicator changes from blue to yellow.
3. The charging cable is now unlocked. Remove the charging cable.
4. Also unplug the connector from the socket of your electric vehicle. Stow away the provided charging cable. To do this, follow the instructions in the manual for your vehicle.

[1] A third-party app is not included in the charging station's scope of certification and is not covered by the prototype test certificate. The operator has to ensure that operation is compliant with calibration laws.

Procedure for unplugging from the vehicle

1. Unlock the charging cable on the vehicle.
2. Follow the instructions listed in your vehicle's manual.
   The status indicator changes from blue to yellow.
3. Remove the plug from the socket of your electric vehicle.
   The status indicator changes from yellow to green.
4. Stow away the provided charging cable. To do this, follow the instructions in the manual for your vehicle.

Malfunctions 7

7.1 Fault elimination

DANGER

Risk of electric shock and fire

Touching live parts may cause electric shock or even death! Damaged charging cables and connectors can cause a fire.

- The system may only be opened and repaired by the manufacturer, its service department or similarly qualified persons. This also applies to the replacement of a damaged charging cable.
- Follow the five safety rules in the event of damage and faults.

Procedure in the event of a fault

If the charging station experiences a fault, proceed as follows:

1. Check the icons on the display. You can find an overview of the icons in the table in the Main menu (Page 74) chapter.
2. In the FAQs (Page 88) chapter, you will find a selection of possible causes of faults.
3. If you are unable to rectify the fault yourself, contact the operator's service hotline.

7.2 Service technician faults

7.2.1 Meter fault

Meter fault message

If there is a fault on the meter, the following message is shown on the display.

Description	Cause	Solution
The EVSE controller reports an error. Maintenance required. The charge point is deactivated and the active charging is stopped	Communication with the meter is disrupted.	Replace the defective meter. Only the manufacturer or companies commissioned by the manufacturer may replace defective meters.

7.2.2 RFID fault

RFID fault message

If there is a fault on the RFID reader, the following message is shown on the display.

Description	Cause	Solution
RFID card not recognized	RFID reader not (properly) connected.	Check whether the RFID reader is correctly connected to the RFID board (VEN_ADA0).
	RFID reader defective	Replace the RFID reader.

7.2.3 Display fault

Fault display

If the display is dark, determine the fault using the table.

Description	Cause	Solution
Display remains black	The LVDS or HDMI cable is not connected correctly.	Connect the cable properly.
	The computer is off or without power.	Switch the PC on. Check the power supply.
	The display is overheated due to direct sunlight.	Switch the charging station off and on again.
	The content/GUI is not installed properly.	Check the installation.

7.2.4 OCPP messages

Message display

The messages displayed on the server (e.g. web interface) may differ from the display messages. This is due to the server setting.

Ask the backend provider how to correctly assign the OCPP specified messages/types.

Status messages to the backend

The various status messages are listed in the following table.

Table 7- 1 OCPP NoError message

Message frame text Charging station ⇒ Backend	**Message frame text Backend ⇒ Charging station**	**Component**	**Description**
NoError	Available	Charging station or Charge point 1 or 2	Charging is possible
NoError	Unavailable	Charging station or Charge point 1 or 2	Charging is not possible
NoError	Unavailable	Charge point 1 or 2	The EVSE sibling connector is occupied.
NoError	Reserved	Charge point 1 or 2	Charge point reserved
NoError	SuspendedEVSE	Charge point 1 or 2	Charging, charging suspended by EVSE
NoError	SuspendedEV	Charge point 1 or 2	Charging, charging suspended by EV
NoError	Charging	Charge point 1 or 2	Charging
NoError	Preparing	Charge point 1 or 2	Connected Charging is being prepared
NoError	Finishing	Charge point 1 or 2	Connected Charging is being completed

Weak signal

Message frame text Charging station ⇒ Backend: **WeakSingal**

Message frame text Backend ⇒ Charging station: **Available**

Component: **Charging station**

Status LED: **No effect**

Description	**Cause**	**Solution**
Weak signal "* dB"	Position of the charging station or outer shielding	Amplify the signal if the problem persists.

RFID reader

Message frame text Charging station ⇒ Backend: **ReaderFailure**

Message frame text Backend ⇒ Charging station: **Available**

Component: **Charging station**

Status LED: **No effect**

Description	Cause	Solution
No RFID reader found	RFID reader not plugged in	Check wiring/connection to the RFID reader.
	RFID reader defective	Replace the RFID reader

Overvoltage protection

Message frame text Charging station ⇒ Backend: **OtherError (OverVoltageProtectionFailure)**

Message frame text Backend ⇒ Charging station: **Available**

Component: **Charging station**

Status LED: **No effect**

Description	Cause	Solution
Overvoltage protection fault	Loose terminal	Check the overvoltage protection and the signaling contact.
	Overvoltage protection has tripped	Change the overvoltage protection.

Fault: EVSE connection error

Message frame text Charging station ⇒ Backend: **OtherError (EVSECommunicationError)**

Message frame text Backend ⇒ Charging station: **Faulted**

Component: **Charge point 1 or 2**

Status LED: **Flashes red 1x**

Description	Cause	Solution
Connection error to the EVSE-controller	Network error	Check wiring/connection of the EVSE-controller to the PC.
	Communication with the EVSE-controller does not work	Check/update the firmware.

Fault: EV connection error

Message frame text Charging station ⇒ Backend: **EVCommunicationError**

Message frame text Backend ⇒ Charging station: **Faulted**

Component: **Charge point 1 or 2**

Status LED: **Flashes red 1x**

Description	Cause	Solution
Connection error to the vehicle	Communication with the EV-controller does not work	Check wiring/connection to the vehicle.
		Plug in the charging cable again.

Excess temperature fault

Message frame text Charging station ⇒ Backend: **HighTemperature**

Message frame text Backend ⇒ Charging station: **Faulted**

Component: **Charge point 1 or 2**

Status LED: **Flashes red 1x**

Description	Cause	Solution
The temperature has exceeded the permissible value.	Fan is defective	Replace the defective fan.
	Filter mat is dirty	Change the filter mats.

Contactor fault

Message frame text Charging station ⇒ Backend: **PowerSwitchFailure**

Message frame text Backend ⇒ Charging station: **Faulted**

Component: **Charge point 1 or 2**

Status LED: **Flashes red 2x**

Description	Cause	Solution
Main contactor fault	The main contactor gets stuck.	Replace the main contactor.
	Auxiliary contact faulty	Check the auxiliary contact. Replace the auxiliary contact if necessary.
	Wrong type of contactor	Check whether the correct type of contactor is installed. For example, a DC contactor has been replaced by an AC contactor.

Circuit breaker fault

Message frame text Charging station ⇒ Backend: **OverCurrentFailure**

Message frame text Backend ⇒ Charging station: **Faulted**

Component: **Charge point 1 or 2**

Status LED: **Flashes red 3x**

Description	Cause	Solution
• Circuit breaker error • Circuit breaker has tripped	The main contactor gets stuck. The EVSE-controller triggers the circuit breaker for safety reasons.	Replace the main contactor.
	Loose connections on the auxiliary contact wiring.	Check the wiring between the main contactor auxiliary contact and the EVSE-controller. Tighten the terminal points.
	Circuit breaker defective	Check the circuit breaker. Replace the circuit breaker if necessary.
Overcurrent detected	Circuit breaker has tripped.	Check the circuit breaker and reset it.
	Circuit breaker trips again after reset (< 2 s).	See row: Circuit breaker error

RCCB fault

Message frame text Charging station ⇒ Backend: **GroundFailure**

Message frame text Backend ⇒ Charging station: **Faulted**

Component: **Charge point 1 or 2**

Status LED: **Flashes red 4x**

Description	Cause	Solution
Ground fault detected	RCCB has tripped.	Check the RCCB. Switch the RCCB on again.
	The RCCB tripped when the charging started.	Make sure that all cables have the correct voltage.

Connector lock fault

Message frame text Charging station ⇒ Backend: **ConnectorLockFailure**

Message frame text Backend ⇒ Charging station: **Faulted**

Component: **Charge point 1 or 2**

Status LED: **Flashes red 5x**

Description	Cause	Solution
Connector lock error	The locking mechanism is blocked by the cable plug.	Remove the plug from the socket.
	The locking mechanism is mechanically blocked or broken.	Check the locking mechanism. Remove the foreign objects or replace the locking mechanism if necessary.

Meter fault

Message frame text Charging station ⇒ Backend: **PowerMeterFailure**

Message frame text Backend ⇒ Charging station: **Faulted**

Component: **Charge point 1 or 2**

Status LED: **Flashes red 6x**

Description	Cause	Solution
Meter error	The meter is incorrectly wired.	Check the wiring.
	The meter is incorrectly configured.	Check the configuration.

Undervoltage fault

Message frame text Charging station ⇒ Backend: **UnderVoltage**

Message frame text Backend ⇒ Charging station: **Faulted**

Component: **Charge point 1 or 2**

Status LED: **Flashes red 6x**

Description	Cause	Solution
Undervoltage detected	The voltage along the cable is below 207 V.	Check the power supply. The voltage (L1 ... L3) is shown in the notification area of the message on the display.

Fault: Mode 3 error

Message frame text Charging station ⇒ Backend: **OtherError (EVSEInitializationError)**

Message frame text Backend ⇒ Charging station: **Faulted**

Component: **Charge point 1 or 2**

Status LED: **Flashes red 7x**

Description	Cause	Solution
Mode 3 unknown status	Communication problem with the vehicle.	1. Disconnect the vehicle from the charging station. 2. Plug the vehicle back into the charging station. • Check the plug-in connection.
	The vehicle requires charging with ventilation.	Charging with ventilation is not supported.
	The vehicle requires Mode 3 s, but draws power from more than one cable or phase.	Charging with Mode 3 s is not supported. Charging is not possible.

SD card fault

Message frame text Charging station ⇒ Backend: **OtherError (RegulatoryComplianceFailure)**

Message frame text Backend ⇒ Charging station: **Faulted**

Component: **Charge point 1 or 2**

Status LED: **Flashes red 10×**

Description	Cause	Solution
SD card faulty	SD card defective	Replace SD card
GSWML (DE) compatibility		**Note:** Observe the statutory and weights and measures regulations.

7.3 FAQs

Frequently Asked Questions (FAQ)

The following table shows an excerpt of possible messages.

The symbols, their meanings and solutions are described in the three columns.

Symbol	Meaning	Solution
	Vehicle not connected	Connect the charging cable to the vehicle. Check the charging cable.
	Vehicle connected	-
	Vehicle is being analyzed	Wait a moment.
	Vehicle accepted (≤ 32 A @ 3 Ph/22 kW)	-
	Vehicle accepted (i-MiEV Legacy Mode, ≤ 16 A @ 1/3.7 kW)	-
	Vehicle accepted (Mode 3 Simplified, ≤ 16 A @ 1 Ph/3.7 kW)	-

Symbol	Meaning	Solution
	Communication error (Mode 3)	Disconnect the vehicle from the charging station and reconnect the vehicle. Check the vehicle. Check the charging cable. Check the charging station (plug and cable).
	Vehicle not connected	Connect the charging cable to the vehicle and to the charging station.
	Vehicle connected	Status message when you are logged in. (e.g. via smart phone, RFID card, etc.) Select the charging point. Follow the instructions on the display.
	Connection OK	-
	Cable lock error	Disconnect the charging cable and reconnect it. Check that the plug is not soiled (e.g. due to snow or icing). Check the locking mechanism (or controller).
	Cable release fault	Carefully plug the charging cable into the socket. Disconnect the cable again. Check the locking mechanism (or EVSE controller).
	Charging inactive	-
	Charging process – electric vehicle requires power	-
	Charging process – electric vehicle requires no power	Check if the battery is full. Check whether the vehicle cannot be charged because of the temperature (too hot or too cold). Check the cable and vehicle for faults. Check whether the station is configured for the power output (max. rated current too low).
	Power switch fault (switch off).	Change the power switch. Check the circuit breaker (tripped for safety reasons).
	Power switch fault (switch on).	Change the power switch. Check the circuit breaker (tripped for safety reasons).

Symbol	Meaning	Solution
	Phase/line not available.	Check whether the voltage on all lines L1 ... L3 is between 207 ... 255 V.
	100% of the max. power (22 kW) is available	-
	75% or less of the max. power (22 kW) is available	-
	50% or less of the max. power (22 kW) is available	-
	25% or less of the max. power (22 kW) is available	-
	Charging point cover OK	-
	Charging point cover open. This is a status message for type 2 sockets. The connector blocks the cover. Charging active	-
	Charging point cover closed. This is a status message when a SCHUKO socket is installed. The cover prevents removal of the SCHUKO plug during charging. Charging active	-
	Charging point cover open	Before starting the charging process, close the charging point cover.
	Error in charging point cover locking	Check the locking mechanism.
	Error in charging point cover release	Check the locking mechanism.
	EVSE OK	

Symbol	Meaning	Solution
	Charging station inactive (intentionally deactivated)	Activate again (via OCPP backend server)
	Hardware fault	Request service for repair.
	The charging station is not connected to the OCPP server.	Check the network connection and the router setting.
	Invalid setting of OCPP server	Check the OCPP server URLs.
	The PC has no connection to the EVSE controller.	Check the cabling.
	The EVSE controller has incorrect firmware.	Install the latest firmware.
	Charging station reserved	Status message The charging process will start as soon as possible (requires RFID card assigned to the reservation).
	EVSE firmware error	Check the EVSE controller. Update the station software.
	RCCB or MCB OK	-
	RCCB or MCB tripped	On-site technician needed to resolve cause and/or reactivate tripped equipment.
	> 55 °C	Charging is not possible
	50 – 55 °C	Max. power is reduced.
	40 – 50 °C	Max. power is reduced.
	-10 – 40 °C	-
	-10 – -15 °C	-

Symbol	Meaning	Solution
	-15 – -25 °C	-
	< -25 °C	Charging is not possible

FAQ

Maintenance and service

8

8.1 Cleaning and maintenance

Safety measures

Note

Before cleaning or service work, disconnect the system from the power and ensure it cannot be switched back on. To do this, deactivate at least all fuses to which the charging station is connected.

⚠ DANGER

Risk of electrocution

Touching live parts may cause electric shock or death.

Turn off all power supply to the unit before cleaning charging cables. Secure the charging station against restart.

The charging station is switched off via the load breaker switch. Activation is not possible in the charging station. De-energize the supply line.

⚠ DANGER

Risk of electrocution

Do not use steam jets or water jets for cleaning, as they may cause moisture to infiltrate the charging station. Moisture inside the charging station poses a risk of electric shock.

The manufacturer is not liable for damage resulting from improper cleaning methods.

Cleaning guidelines

- Do not use solvents or corrosive or abrasive detergents.
- Use a mild, non-corrosive cleaning agent, e.g. dishwashing detergent, even if heavily soiled.
- Wipe the charging station from the outside with a moist cloth and rub the station dry.
- Clean the display using glass detergents. Use only soft cleaning cloths.
- Deionized water is particularly suitable for cleaning the unit.
- Do not scrape off stubborn dirt using hard objects.
- Do not use any sharp-edged tools.
- Soften paper stickers in advance for easy removal.
- Make sure that water does not get underneath the cover of charging sockets or into air slots.

To ensure optimum quality and functionality, clean all charging stations according to agreed intervals. The display, in particular, requires regular maintenance.

Note

Use environmentally friendly cleaning agents approved for cleaning aluminum, glass, and ABS plastics.

Note

Only qualified personnel may clean the charging station from the inside.

8.2 Maintenance

Note

High currents flow over a long period of time when charging the electric vehicle. The electrical installation of the charging station must be checked regularly to prevent overheating of cables and resulting damage.

Note

Only qualified personnel trained for these activities may perform this work.

The appendix contains the following lists:

- Spare parts (Page 113)
- Installation and maintenance schedule (Page 114)

Inspecting safety devices

The charging station has at least one integrated residual current circuit breaker (RCCB) and miniature circuit breaker (MCB).

Check all protective devices during commissioning in accordance with the national installation regulations. You can only check the RCCB/MCB combination when the supply voltage is present. To check the function of the RCCB/MCB combination, press the test button "T" of the RCCB/MCB combination.

Checking the safety equipment

Check protective devices of the charging station every six months in accordance with manufacturer instructions. Follow these steps to check the protection equipment of the charging station:

1. Open the charging station.
2. Press the test button "T" on the respective RCCB/MCB.
   The RCCB/MCB trips, the respective status light starts flashing red.
3. Activate the RCCB/MCB by flipping the fuse switch.

Check the function of the residual current circuit breaker (RCCB) by pressing the test button "T". This test does not replace the measurement for resistance earthing (RE) or proper condition testing for the protective earth conductor.

Note

Note that you must perform the above test for each RCCB/MCB of the charging station. Depending on the configuration of the charging station, one charging station comprises several RCCB/MCBs. According to national installation regulations, you must document the respective tests carried out on RCCB/MCBs.

Note

You must immediately report any damage to seals, in particular damage to electrical equipment or wiring, or missing seals or covers to the operator. Shut the unit down.

Maintenance of fans and filter mats

In the course of **checking the safety equipment**, check the function of the fans twice yearly and replace the filter mats on a preventive basis.

Pollution may be lighter or heavier depending on the place of installation. Adapt the inspection and replacement interval of the filter mats to the place of installation.

The figure below shows the positions of the fans and filter mats.

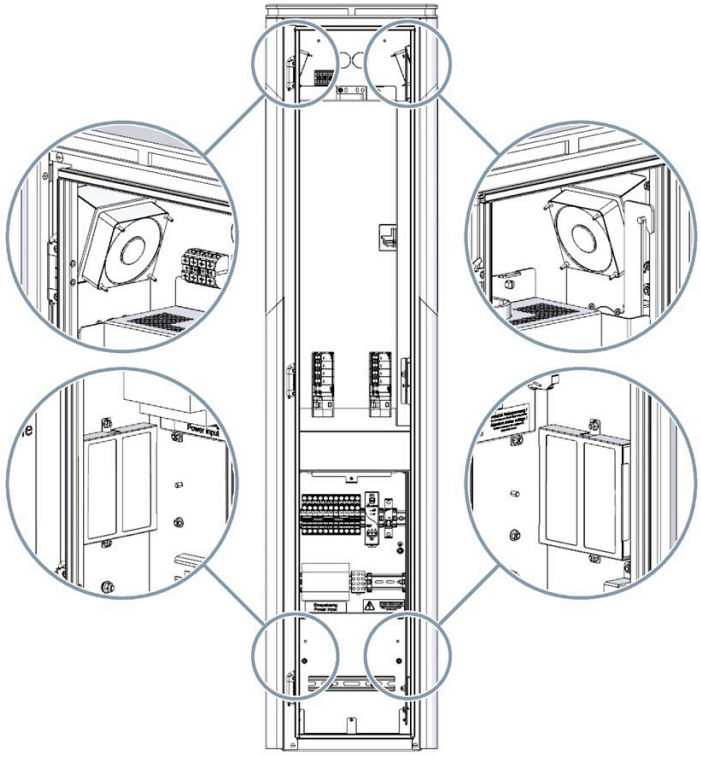

Figure 8-1 Fans and filter mats

NOTICE
Electrical hazards The charging station uses 400 V AC supply voltage. Touching live parts may cause electric shock and could be fatal. Work on the electrical installation may only be carried out by skilled electricians and when the power supply is disconnected. The charging station is switched off via the load breaker switch. Activation is not possible in the charging station. De-energize the supply line.

8.3 Diagnostic tests

Seals break

⚠ WARNING

Before opening the seal, disconnect the charging station from the power supply using the switch disconnector.

Secure the charging station against being switched on again.

Only personnel authorized by the operator may break seals of the infeed cover and charging module covers during testing.

Only personnel authorized by Siemens may:

- Break seals of the meter
- Break seals of the SD card
- Perform work on the meter

Remove the meter

Follow these steps to remove the meter.

Check that the charging station is de-energized.

1. Remove the screws from the meter cover plate.
2. Remove the screws from the meter support plate.

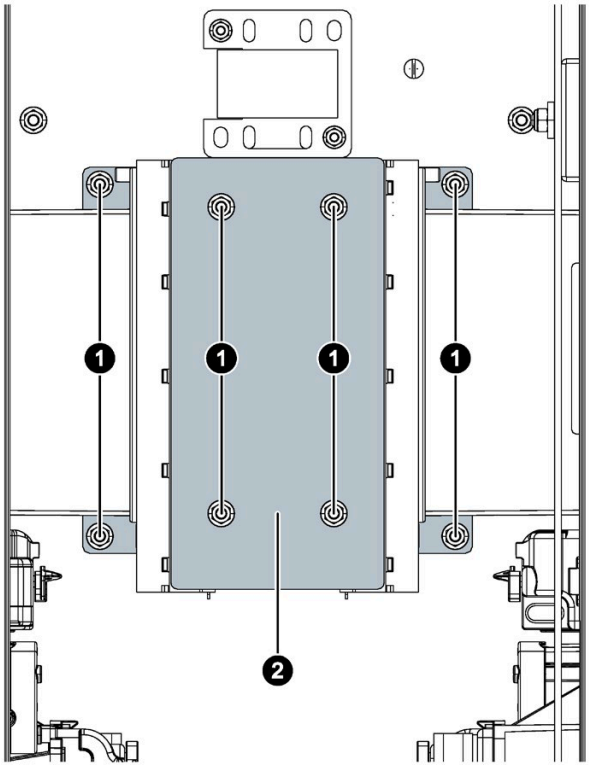

Figure 8-2 Mounting the meter

3. Lift the meter.

4. Turn the meter to the center position.

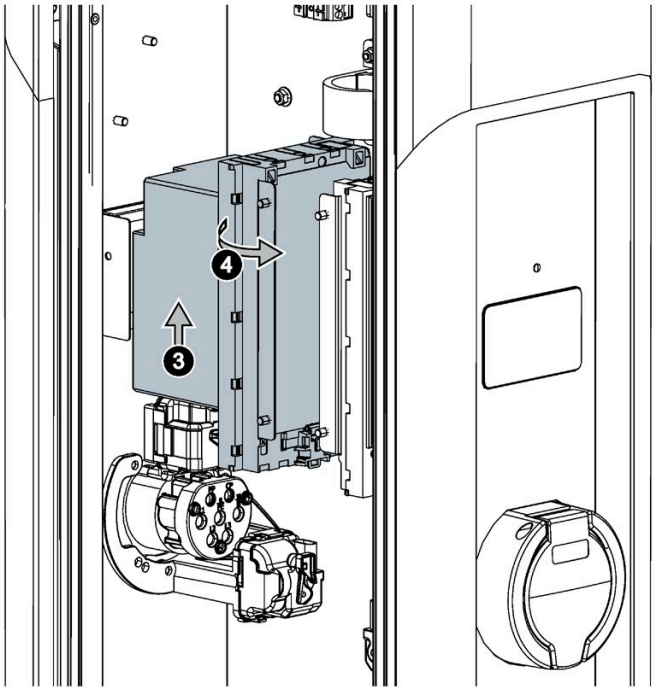

Figure 8-3 Meter charging point left

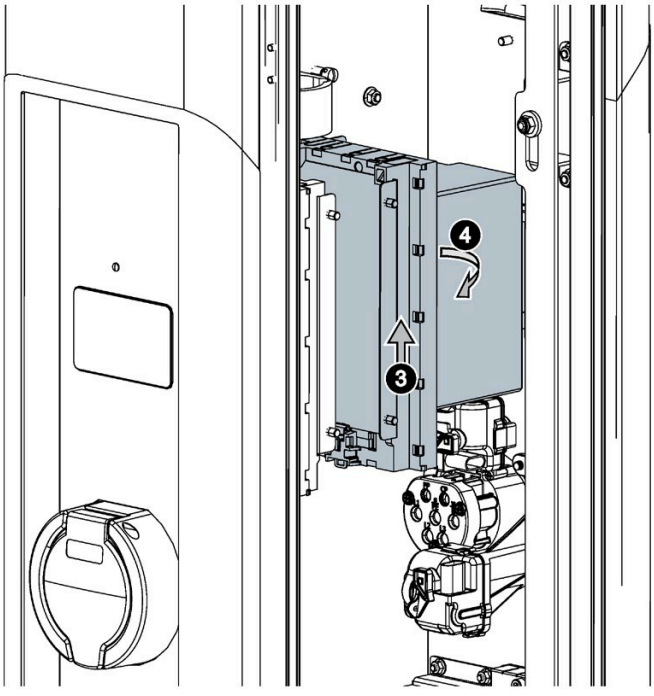

Figure 8-4 Meter charging point right

5. Remove the seal on the sealing pin.

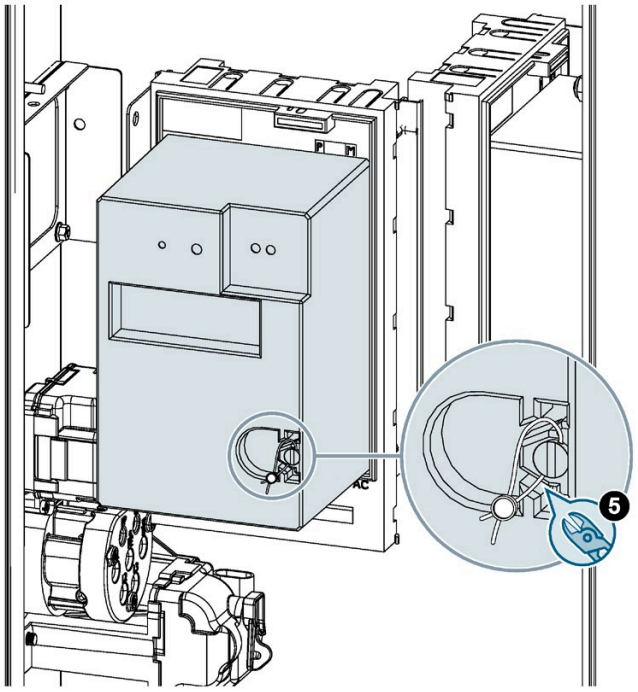

Figure 8-5 Meter seal

6. Use a screwdriver to unscrew the sealing pin. The sliding lock opens.

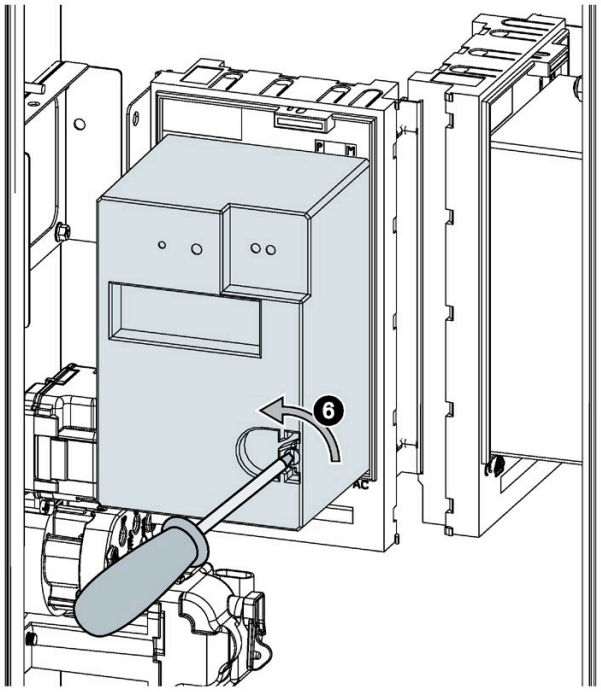

Figure 8-6 Meter sealing pin

7. Push the meter out of the adapter plate by lightly pressing upwards.

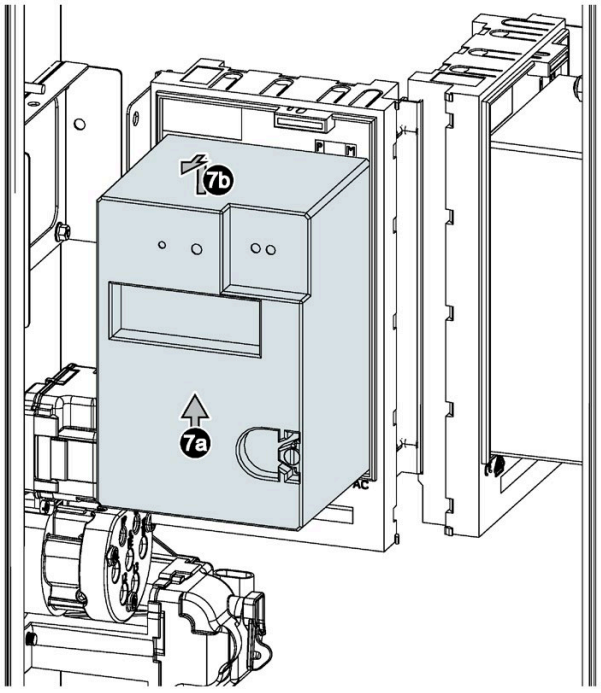

Figure 8-7 Remove the meter

Remove the SD card

The SD card is removed in the presence of the calibration authority.

1. Break the seal of the SD card.
2. Remove the SD card.

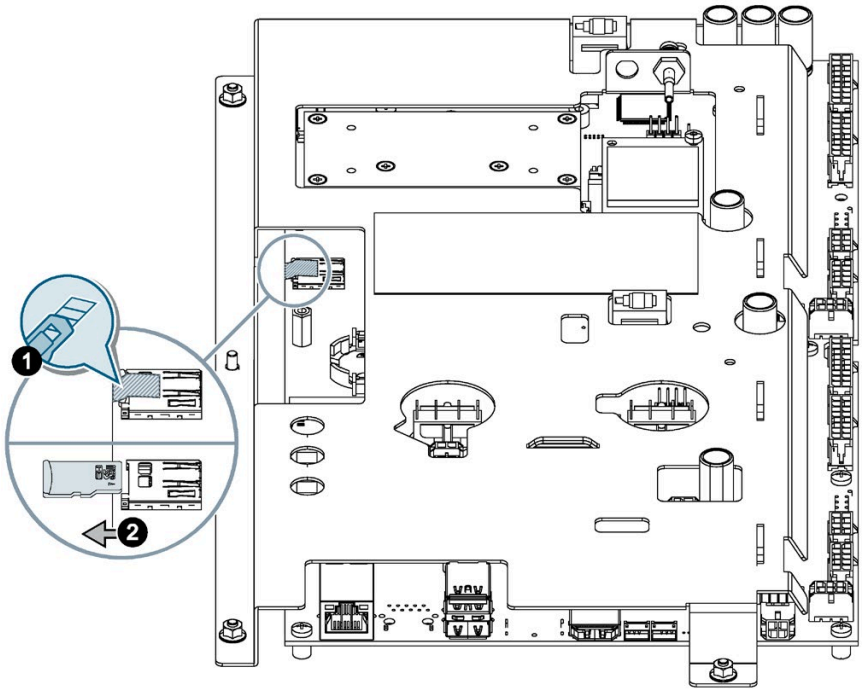

Figure 8-8 Removing the SD card cover

Checking the SD card data

The data is read out with a PC and an SD card reader. The PC requires a driver for the ext4 file system.

Open and check the data using the Transparenz software. If you remove the SD card, the charging station is not available until you insert the card again.

Note

SD card type

Only use an SD card that is approved by Siemens.

8.4 Software updates

Software updates

Siemens makes software updates available as part of ongoing feature enhancements and improvements. Check the software version of your system (Page 70) regularly. Keep the software version of your system up-to-date with software updates.

See also

Commissioning (Page 51)

Adhesive surfaces

9

9.1 Adhesive surfaces

Marking of adhesive surfaces

The hatched areas of the following drawings must not be covered with glue, paint or covered. The supplied quick reference guide is an exception. The quick reference guide is affixed underneath the meter inspection window.

Ventilation slots and the maintenance door must not be restricted or obstructed.

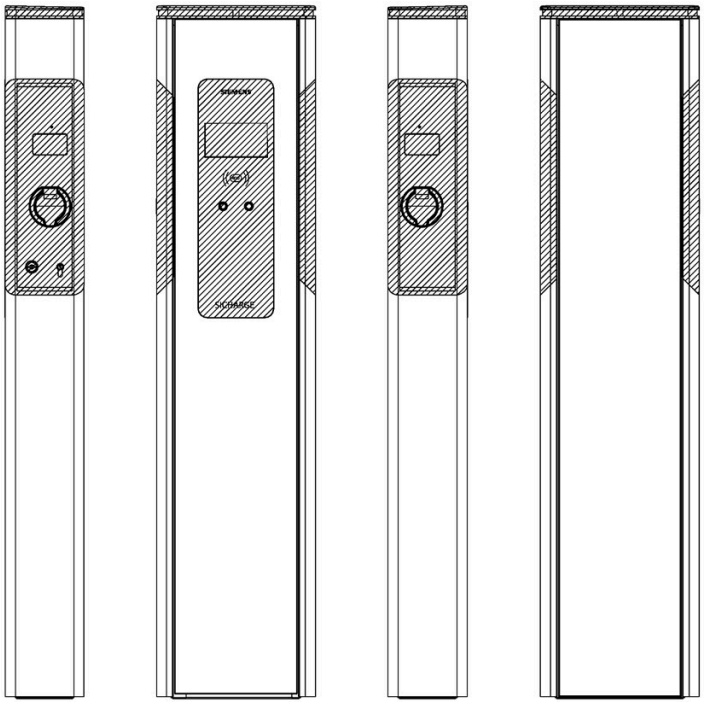

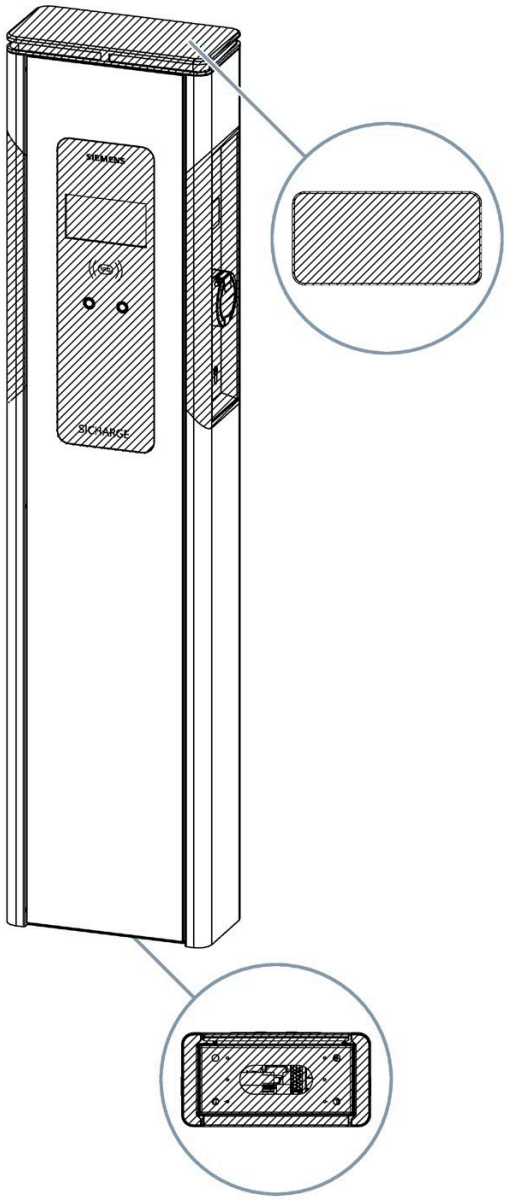

Note

Option: Full or partial foiling

As an option, you can order foiling including adhesive from the factory.

Service & Support

10

10.1 Siemens Industry Support

Fast and easy access to current information on the following:

- **Product support**
  All information and extensive know-how to do with your product; technical specifications; FAQs; certificates; downloads, and manuals.
- **Application examples**
  Tools and examples for solving your automation task, plus function modules, detailed information on performance, and videos.
- **Services**
  Information on industry services, field services, technical support, replacement parts, and training options.
- **Forums**
  For answers and solutions in all matters of automation technology.
- **mySupport**
  Your personal working area in Siemens Industry Online Support for notifications, support queries, and configurable documents.

This information is provided by Siemens Industry Online Support (https://support.industry.siemens.com/cs/ww/)on the internet.

Disposal

11

Disposing of packaging

The packaging of the SICHARGE AC22 contains no hazardous substances. Send the packaging for recycling in accordance with the applicable regulations in your country.

Disposing of the battery



Do not dispose of batteries with household waste. Follow local, national, and international regulations to dispose of the battery.

Disposing of the charging station

For the environmentally friendly recycling and disposal of your old device, contact a certified disposal service for electronic scrap. Dispose of the device in accordance with the applicable regulations in your country.

Technical specifications

12

Performance features and options

Designation	**SICHARGE CC AC22**
● **Standard,** O **available as an option**	
Charge points type 2, 32 A acc. to IEC 62196-1,2 and 61851-1	2
Connector lock type 2	●
Flap lock type 2	●
Charge current can be set from 6 ... 32 A	●
Monitoring for contactor malfunction	●
Residual current circuit breaker type B 30 mA	●
RFID acc. to • ISO 14443A • ISO 14443B • ISO 18092 ECMA-340	●
Counter EHZ version EDL incl. illuminated viewing window	●
Maximum charging capacity can be configured via OCPP	●
OCPP 1.6	●
LED status light, viewing radius 300°, colored status message per charge point	●
Selection of charging point via pushbutton	●
4G module with antenna	●
Ethernet interface instead of 4G module	O
Overvoltage protection/lightning protection mains DEHN, with telecommunication function, overvoltage class I-III	O
Double closing	●
Internal HAK with meter field	O
Use in public outdoor areas	●
Videoplay advertising in the display	●
Base plate with foundation anchor (option B00)	O
Fixed charging cables	O
Double terminal (option A00)	O
Last Gasp function	O
Backend pre-configuration (integration test required)	O
Ad hoc payment method using Giro-e	O

A list of order options can be found in section Options available for orders (Page 116) in the appendix.

Technical specifications

Designation	**SICHARGE CC AC22**
Display	7" LED
Supply voltage	AC 400 V ± 10 % 3-phase N+PE
Connection frequency	50 Hz
Maximum connected power	63 A / phase
Maximum charging capacity per charging point	22 kW[1]
Load management acc. to maximum infeed; chronological prioritization	6 ... 63 A
Supported networks (local requirements to be clarified on site)	TN-C / TN-S TN-C-S/TT
Maximum cross-section for cable	35 mm[2]
Weight (standard model)	75 kg
Dimensions (H x W x D) in mm	1700 x 390 x 194
Ambient temperature operating range	-25 ... 50 °C
Humidity	5 ... 95%
Ambient air pressure	860 ... 1060 hPa
Protection rating (IP)	IP54
Intrinsic consumption in standard version	25 W
Accuracy class energy counter	Class A
SIM card (recommended data volume)	500 MB / month[2]
Standards and legal bases: EN 61851-1:2011 EN 61851-22:2002 EN 61000-6-3:2007+A1:2011 EN 61000-3-11:2000 EN 61000-3-12:2011 EN 61000-6-1:2007 IEC 62196-2 REA document 6-A / PTB-A 50.7 Legal reference to the Measurement and Calibration Act of 25 July 2013	●

1 = For 1-phase charging with fixed charging cable, the operator must limit the output power to 3.7 kW

2 = If video functions are used, the data volume may have to be increased

Times for full charging

Charging times depend on many variables, but mainly on the battery capacity of the vehicle. To determine the time required for full charging of the vehicle, refer to the vehicle documentation.

Storage and transport

Follow the following framework conditions when storing and transporting the charging station:

- The permissible storage temperature of the charging station is -25 to +50 °C.
- The permissible air humidity is 5 to 95%, non-condensing.
- The charging station may only be transported in the transport packaging provided for this purpose using the supplied safety and shock-absorbing materials.
- To transport the charging station, disconnect all external cable connections.

  Set switches of the fuses to the "Off" position.

  Close any transport locks on the cover.
- Avoid shocks and impacts during transport.

Appendix

A

A.1 Overview of article numbers

Overview of the article number structure

The following graphic shows the article number structure.

Article number data position	1	2	3	4	5	6	7	-	8	9	10	11	12	-	13	14	15	16	-	Z	
SICHARGE CC AC 22kW, charging station, 7" display	8	E	M	1	0	0	0	-	0	A	.	.	.	-	.	.	.	.	-	.	.
Communication																					
Communication via 4G, standard RFID reader											A	.	.	-	.	.	.	.	-	.	.
Communication via 4G, RFID, reader type 2											C	.	.	-	.	.	.	.	-	.	.
Communication via LAN interface, RFID, reader type 2											G	.	.	-	.	.	.	.	-	.	.
Connection																					
2x socket type 2 (standard)												0	.	-	.	.	.	.	-	.	.
Building junction box																					
Standard without building junction box													0	-	.	.	.	.	-	.	.
Incl. equipped building junction box (German version, 3-point meter field)													1	-	.	.	.	.	-	.	.
Incl. empty building junction box (upon request)													2	-	.	.	.	.	-	.	.
Incl. equipped building junction box (German version, eHz/BKE-i meter field)													3	-	.	.	.	.	-	.	.
Incl. equipped building junction box (German version, eHz/BKE-i meter field) and fiber optics adapter OKK													4	-	.	.	.	.	-	.	.
Color																					
Standard color RAL 9006, metallic iron, matt, no foiling															0	.	.	.	-	.	.
Standard color RAL 9006, metallic iron, matt, half foiling[1]															9	.	.	.	-	.	N0Y
Standard color RAL 9006, metallic iron, matt, full foiling[1]															9	.	.	.	-	.	N1Y
Electrical protection																					
Basic version without overvoltage protection																A	.	.	-	.	.
Overvoltage protection, arrester type 1 + type 2 according to EN 61643-11																B	.	.	-	.	.
Last Gasp function																C	.	.	-	.	.
Overvoltage protection and Last Gasp function, arrester type 1 + type 2 according to EN 61643-11																D	.	.	-	.	.
Documentation & language																					
Manual and HMI in English																	A	.	-	.	.
Manual and HMI in German																	B	.	-	.	.
SIM card																					
Without SIM card and without pre-configured backend																		0	-	.	.
Including SIM card, eCarOC pre-configured																		1	-	.	.
Backend connection pre-configured (option see backend connection)[2] [3]																		9	-	.	R0.
Options																					
Double terminal for connection of two supply cables (max. 2 charging stations in parallel)																		.	-	Z	A00
Base plate with foundation anchor																		.	-	Z	B00
Giro-e activation (only in connection with reader type 2 and ERK)																		.	-	Z	C00
Reinforced type 2 plug receptacles (only for versions with attached cable)																		.	-	Z	L00
Backend connection[2]																					
Backend connection to ChargeCloud / OCPP 1.6, pre-configured																		9	-	.	R0A
Backend connection to ChargeIT / OCPP 1.6, pre-configured																		9	-	.	R0B
Backend connection to Driivz / OCPP 1.6, pre-configured																		9	-	.	R0C
Backend connection to ENIO / OCPP 1.6, pre-configured																		9	-	.	R0D
Backend connection to HTB - Has To Be / OCPP 1.6, pre-configured																		9	-	.	R0E
Backend connection to NTT Data / OCPP 1.6, pre-configured																		9	-	.	R0G
Backend connection to SmartLab / OCPP 1.6, pre-configured																		9	-	.	R0H
Backend connection to Smartrix / OCPP 1.6, pre-configured																		9	-	.	R0J
Backend connection to Swarco ARGOS / OCPP 1.6, pre-configured																		9	-	.	R0K
Backend connection to Virta / OCPP 1.6, pre-configured																		9	-	.	R0L
Backend connection to Hamburg power grid / OCPP 1.6, pre-configured																		9	-	.	R0N

[1] Note minimum order quantities; customer-spec. colors on request
[2] SIM card order by customer required
[3] Integration test required

Figure A-1 Overview of article number structure

A.2 Spare parts

Spare parts

The spare parts listed are available for the charging station.

Spare part	Article number	Weight in kg	Calibration law-relevant[1]
Display unit SICHARGE	FZI:40094.013	5	x
Charging socket type 2 SV+KDV	FZI:40094.014	0.5	
Earthed charging socket 16A 230V, type E	FZI:40094.015	0.1	
SICHARGE inspection window	FZI:40094.016	0.1	
Key EMKA for half cylinder 1089-U2, spare key 12B-140	FZI:40094.017	0.02	
Profile half cylinder 1089-U2	FZI:40094.018	0.1	
Double-bit key no.5	FZI:40094.019	0.03	
Bar lock, complete	FZI:40094.020	0.4	
LED topper SICHARGE	FZI:40094.021	2.3	
Axial fan 80x80x25 mm 24 V DC	FZI:40094.022	0.08	
Filter mat 120x120x20 mm	FZI:40094.023	0.01	
Power supply unit DRP024V060W1BN	FZI:40094.024	0.4	
Paint touch-up pen RAL9006	FZI:40094.026	0.05	
Door SICHARGE RAL 9006	FZI:40094.028	7.7	
Rear panel SICHARGE RAL 9006	FZI:40094.030	3.6	
Side part SICHARGE without bay, RAL 9006	FZI:40094.032	2.4	
Charging bay plate on the right, ERK	FZI:40094.033	0.5	
Charging bay plate on the left, ERK	FZI:40094.034	0.5	
Top cover plate ERK SICHARGE V1	FZI:40094.039	1.5	x
Top cover plate ERK SICHARGE V2	FZI:40094.040	1.6	x
Bottom cover plate ERK SICHARGE V1	FZI:40094.041	0.9	x
Bottom cover plate ERK SICHARGE V2	FZI:40094.042	0.9	x
Counter for the electronic household meter eMoc eHZ-KW8E2A5L0EF2P_X0-X0	FZI:40094.043	0.4	x
LED meter lighting	FZI:40094.045	0.1	
GSM antenna module	FZI:40094.046	0.1	
SCHRACK AR876103 RCCB type B	FZI:40094.047	0.4	
SCHRACK AM900003 auxiliary signaling contact	FZI:40094.048	0.03	
Overvoltage protection DSH TT 255FM	FZI:40094.049	0.5	
Charging cable with Mode3 charging coupling	FZI:40094.060	4.4	
Bracket for type 2 charging coupling	FZI:40094.061	0.1	
M25 CLICK cable gland	FZI:40094.062	0.03	
Building junction box, empty (HAK) RAL 9006	FZI:40094.063	20	
Foam rubber profile EPDM black 4 m	FZI:40094.071	0.65	
Retrofit kit, insulation mat SICHARGE	FZI:40094.073	0.1	
Ethernet interface conversion kit	FIZ:40094.104	0.3	

[1] = Follow the relevant measurement and calibration regulations when replacing spare parts

A.3 Installation and maintenance schedule

SICHARGE AC22 Checklist

The following table shows the tasks and their expected duration for the following applications:

- Installation/assembly
- Commissioning
- Maintenance

Table A- 1 Installation and maintenance schedule

Action	Installation/assembly	Commissioning	Maintenance	Duration in min.
Drilling holes in the foundation anchor	x			10
Setting anchor rods	x			5
Setting up and bolting the charging station	x			15
Assembling and connecting the connection cable	x			20
Visual and functional check for mechanical damage • Locking mechanism • Lid lock • Type 2 connector • LED topper • Glass front • Display • Housing		x	x	5
Checking • Fault message • Backend connection • SIM card		x	x	5
Cleaning (without filter), inside and outside			x	10
Checking charging sockets and charging cables[1] • Type 2 connector lock • Hinged cover interlock			x	2
Check circuit breakers and the fault message on the LED topper (flashing code)			x	2
Measurements acc. to DIN VDE, e.g.: • Insulation measurement • Grounding resistance measurement • Loop impedance measurement		x	x	25

Action	**Installa-tion/assembly**	**Commis-sioning**	**Mainte-nance**	**Duration in min.**
Check axial fan for: • Function • Running noise • Cleaning Once the charging station has been switched on, the fans run for 15 minutes (test mode)			x	2
Change air filters on the bottom of the charging station			x	4
Check the RCCB (semi-annual DGUV V3) including protocol		x	x	14
Generate maintenance log		x	x	15
Function test for each individual charge point: • Trial charge (with load or electric vehicle) • Type 2 connector lock • Hinged cover control	x	x	x	10
Setup time		x	x	10
Indication of the next test date		x	x	2
Read out meter readings		x	x	2
Perform update	When an update is available			2
Change axial fan	In case of fan failure			20
Travel time	x	x	x	

A.4 Options available for orders

Option overview

These extensions can be optionally ordered for the SICHARGE CC AC22 .

Options and accessories	Description
Building terminal box to SICHARGE CC AC22	Add-on module for the back of the SICHARGE CC AC22. Allows power connection directly from the utility company. Includes load fuse, RCCB and electricity meter. Can be used for up to two charging stations.
Mounting plate with anchors	Stainless steel plate with foundation anchors for pouring into the foundation (not included). This simplifies alignment and mounting.
Overvoltage protection	Internal add-on module, arrester type 1 + type 2 according to EN 61643-1, spark gap technology with follow current limitation, defect indication, trip signal via OCPP, protection level <=1.5 kV. Lightning current surge (10/350):50 kA, energetic coordination according to DIN EN 62305-4
Integration of a backend system	If required, SICHARGE CC AC22 can be connected to any backend acc. to OCPP 1.6 already at the factory. We also configure and test the connection of previously unconnected backends for you.
Configuration and communication test	Every SICHARGE CC AC22 is fully tested at the factory. Optionally, customer-specific configurations including SIM card and communication tests to the backend can be performed for you.
Customer-specific color tone	Standard color is RAL 9006. A number of other colors are available on request.
Full foiling	Customer-specific foiling of the four sides of the SICHARGE CC AC22 in accordance with the foiling plan with UV-resistant foil in 4-color printing, applied directly in the factory.
Partial foiling	Same as full foiling, but only approx. 50% of the total area
Last Gasp function	Internal add-on module, allows you to unlock the charging cable and an alarm to the backend in the event of power failure

A.5 Option: HAK

HAK building junction box

The HAK building junction box shown in the illustration is available in the following versions.

Table A- 2 HAK versions

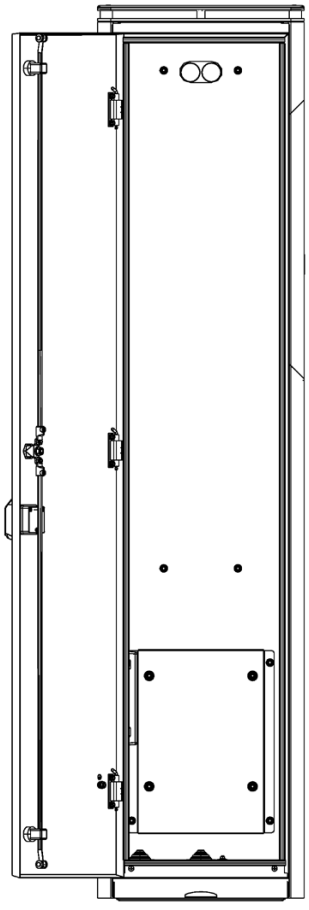

HAK housing, empty

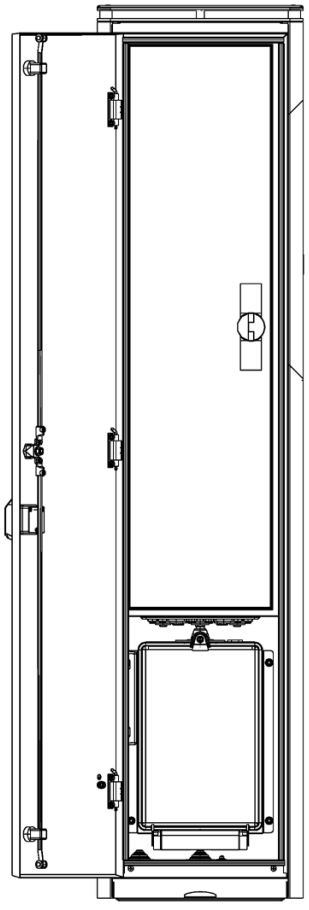

HAK with meter cabinet and building junction box

The HAK housing is available in various models for the installation of a building junction box and a meter cabinet.

The dimensions of the HAK housing including the charging station can be found in section Overview of dimensions of the SICHARGE CC AC22 charging station (Page 122).

The following figure shows the positions for seals. These seals are to be attached by the operator.

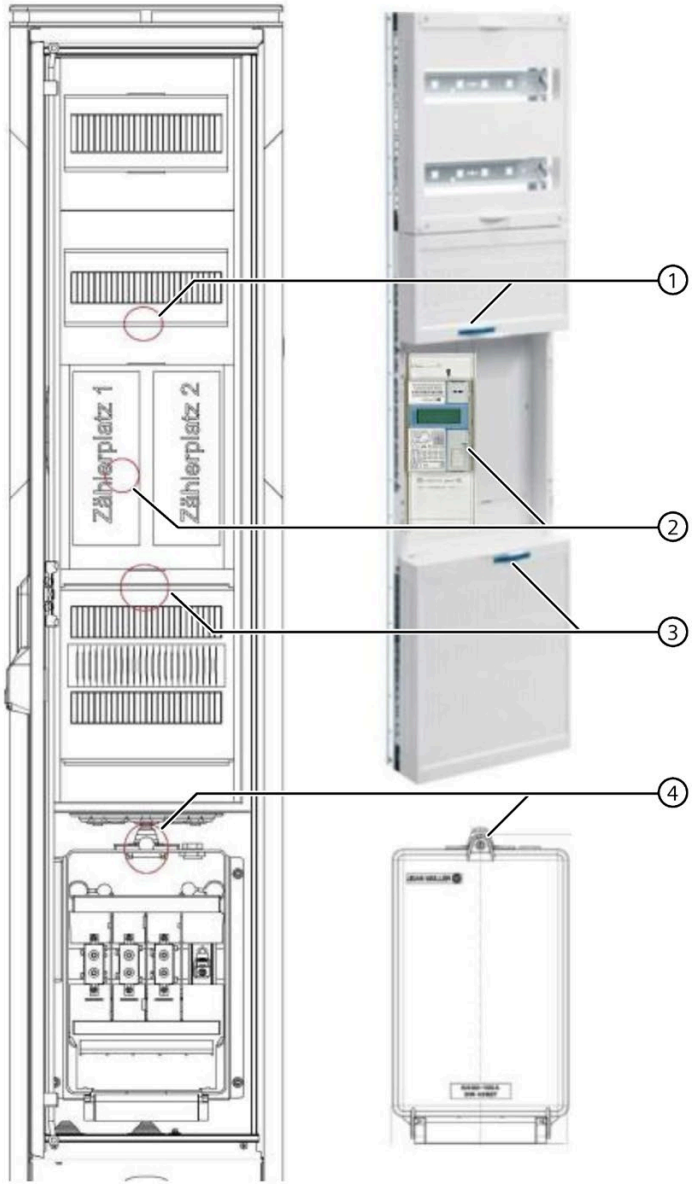

① User seal on the top cover
② User seal at ERM for BKE adapter or at the terminal cover for three-point meter
③ User seal on the bottom cover
④ User seal on the HAK

Figure A-2 Positions of the seals of the energy supplier

HAK housing, empty

The following is set up when ordering a HAK housing without equipment.

- Mounting points for meter cabinet and building junction box
- Connection cable between the HAK and the charging station

HAK housing with meter cabinet and building junction box

The following is set up when ordering a HAK housing with a meter cabinet and a building junction box.

- Meter cabinet
- Building junction box
- Connection cable between the HAK and the charging station

Note

Coordination with the energy supplier at the installation site

The HAK execution requirements of the local energy suppliers differ.

Before placing an order, clarify the requirements with the local energy supplier.

Connecting the supply cable

⚠ DANGER

Risk of electric shock

When connecting the SICHARGE charging station, pay attention to the five safety rules.

Equip the HAK housing with a meter cabinet and a building junction box. Follow the guidelines of your local network operator.

To connect the supply cable, proceed as follows:

1. Strip the supply cable above the strain relief of the building junction box.
2. Insert the supply line from below into the HAK housing and the building junction box.
3. Connect the supply cable according to the following criteria:
   - Specifications of the local network operator
   - Grid mode of the supply network
   - Specifications of the building junction box manufacturer
4. Tighten the terminal points in the building junction box according to the specifications of the building junction box manufacturer.
5. Wire the building junction box to the meter cabinet according to the specifications of the local network operator.

6. Connect the connecting cable of the SICHARGE charging station in the meter cabinet of the HAK housing.
7. After completing the work, the operator must seal all covers in the HAK and the charging station.

A.6 Option: Fixed charging cable

Fixed charging cables type 2

Fixed charging cables type 2 can be ordered in these version upon request:

- Spiral charging cable, max. length: 3.5 m
- Straight cable, max. length: 6 m

The following figure shows the charging station with a fixed spiral charging cable type 2.

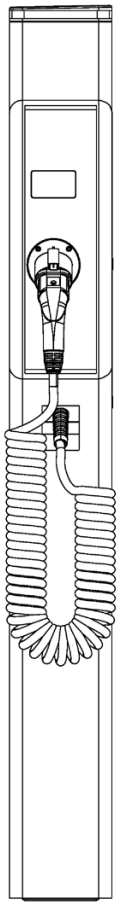

Figure A-3 Charging cable type 2

The fixed charging cables type 2 are stowed in the brackets on the side of the charging station.

With the fixed charging cables type 2, the customer does not need their own charging cable.

Follow safety instructions in sections Safety during operation (Page 15) and Charging process (Page 76).

Note

1-phase charging with fixed charging cable

For 1-phase charging with fixed charging cable, the operator must limit the output power to 3.7 kW.
This specification is defined in the calibration law.

A.7 Overview of dimensions of the SICHARGE CC AC22 charging station

Dimension drawing of charging station

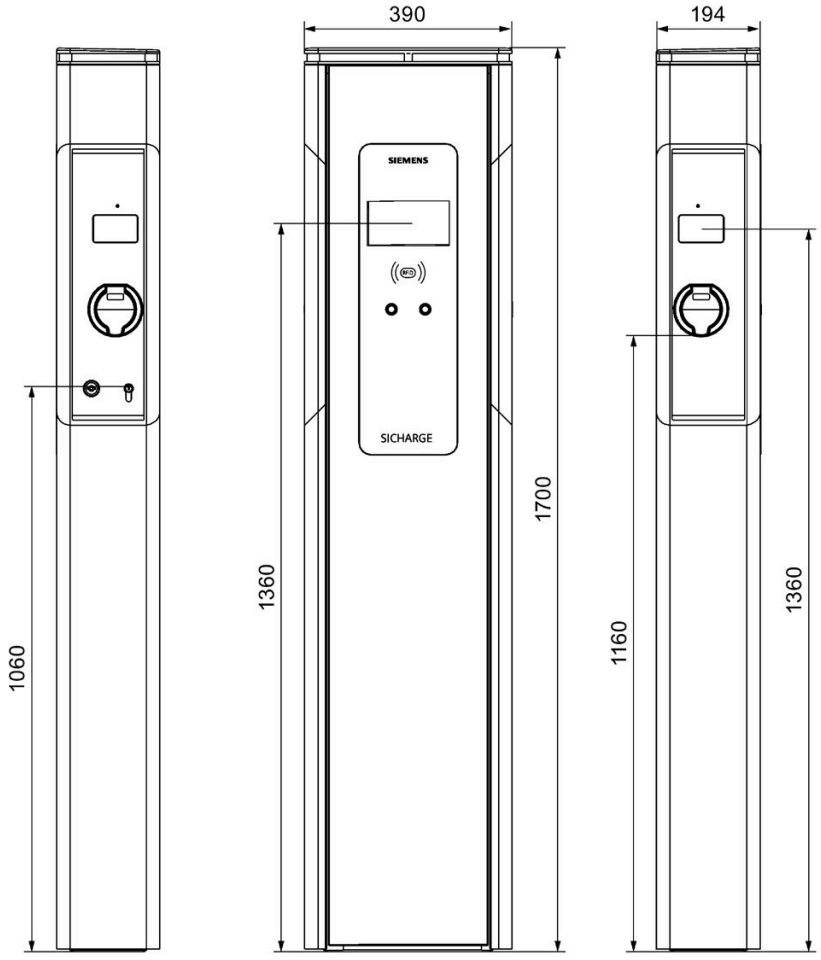

Figure A-4 Dimension drawing of charging station

Dimension drawing of charging station with HAK

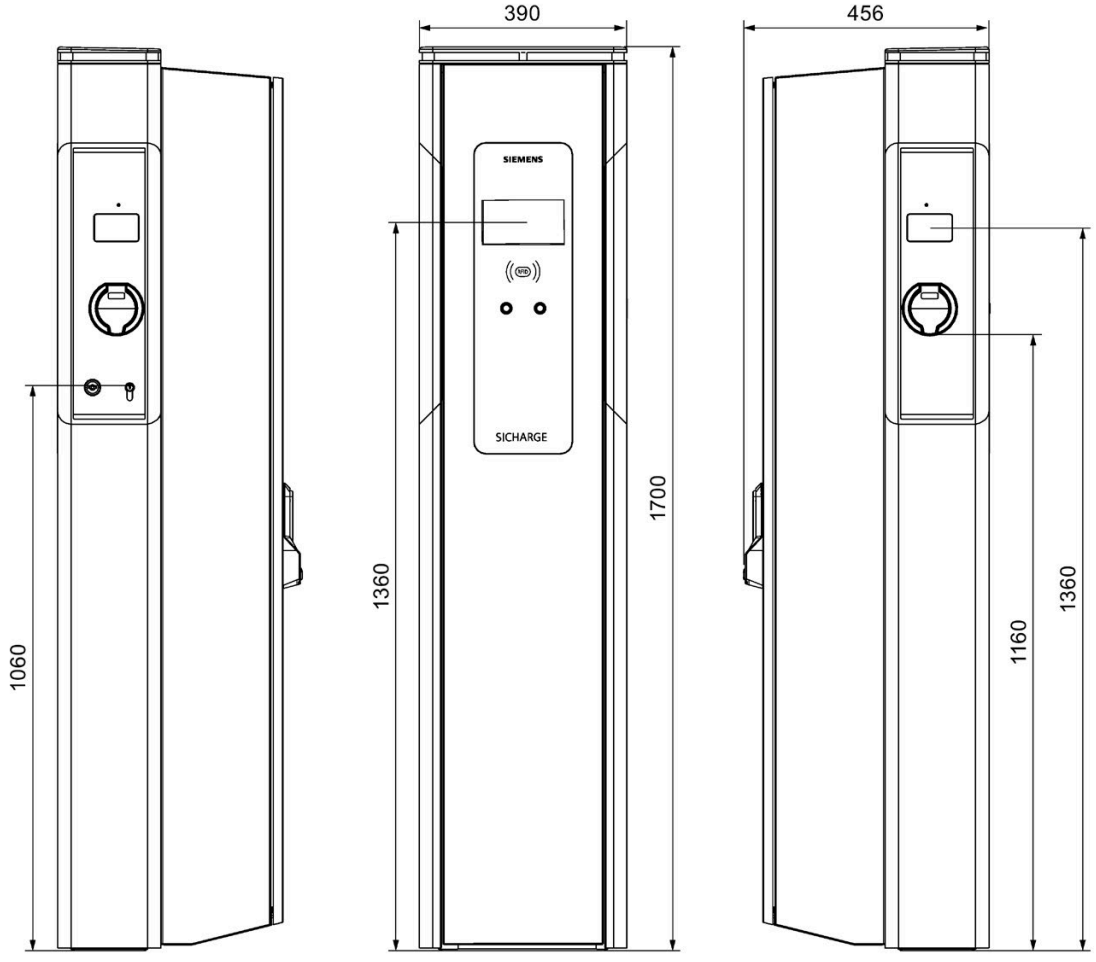

Figure A-5 Dimension drawing of charging station with HAK

Foundation and reinforcement plan

The foundation and reinforcement plan for the respective version can be found here (https://support.industry.siemens.com/cs/ww/de/view/109780588).

A.8 Information on weights and measures regulations

Eichrechtliche Hinweise und Verwenderauflage

WICHTIGE HINWEISE FÜR DEN BETREIBER DER LADESTATION

Am 17. März 2016 trat die Verordnung über technische Mindestanforderungen an den sicheren und interoperablen Aufbau und Betrieb von öffentlich zugänglichen Ladepunkten für Elektromobile (Ladesäulenverordnung - LSV) in Kraft. Sie schreibt u.a. die Anzeige von Ladepunkten bei der Bundesnetzagentur vor. Betreiber von öffentlich zugänglichen Normal- und Schnellladepunkten müssen der Bundesnetzagentur schriftlich oder elektronisch unter Angabe aller Public Keys der Anlage anzeigen werden (nach § 5 Abs. 1 und Abs. 4 S. 2 LSV)

https://www.bundesnetzagentur.de/DE/Sachgebiete/ElektrizitaetundGas/Unternehmen_Institutionen/E-Mobilitaet/start.html

Zudem ist für den Nachweis der Einhaltung das Inbetriebnahme-Protokoll nach § 3 Abs. 4 LSV i.V.m. § 49 EnWG zu erstellen:

https://www.bundesnetzagentur.de/SharedDocs/Downloads/DE/Sachgebiete/Energie/Unternehmen_Institutionen/Ladesaeulen/Inbetriebnahmeprotokoll.pdf?__blob=publicationFile&v=1

Oben genannte Links können sich jederzeit ändern! Sollten die Links aufgrund von Homepage Anpassungen nicht mehr funktionieren, sind die aktuellen Links unter https://www.bundesnetzagentur.de zu finden![1]

[1] Quelle: https://www.bundesnetzagentur.de

Messrichtigkeitshinweise gemäß Baumusterprüfbescheinigung

Für die hier beschriebenen Geräte gilt § 17 Absatz 4, MessEV

Messrichtigkeitshinweise gemäß CSA-Baumusterprüfbescheinigung

I Auflagen für den Betreiber der Ladeeinrichtung, die dieser als notwendige Voraussetzung für einen bestimmungsgemäßen Betrieb der Ladeeinrichtung erfüllen muss.

Der Betreiber der Ladeeinrichtung ist im Sinne §31 des Mess- und Eichgesetzes der Verwender des Messgerätes.

1. Die Ladeeinrichtung gilt nur dann als eichrechtlich bestimmungsgemäß und eichrechtkonform verwendet, wenn die in ihr eingebauten Zähler nicht anderen Umgebungsbedingungen ausgesetzt sind, als denen, für die ihre Baumusterprüfbescheinigung erteilt wurde.
2. Der Verwender dieses Produktes muss bei Anmeldung der Ladepunkte bei der Bundesnetzagentur in deren Anmeldeformular den an der Ladesäule zu den Ladepunkten angegebenen PK mit anmelden! Ohne diese Anmeldung ist ein eichrechtkonformer Betrieb der Säule nicht möglich.Weblink: https://www.bundesnetzagentur.de/DE/Sachgebiete/ElektrizitaetundGas/Unternehmen_Institutionen/HandelundVertrieb/Ladesaeulen/Anzeige_Ladepunkte_node.html
3. Der Verwender dieses Produktes hat sicherzustellen, dass die Eichgültigkeitsdauern für die Komponenten in der Ladeeinrichtung und für die Ladeeinrichtung selbst nicht überschritten werden.

4. Der Verwender dieses Produkts hat sicherzustellen, dass Ladeeinrichtungen zeitnah außer Betrieb genommen werden, wenn wegen Stör- oder Fehleranzeigen im Display der eichrechtlich relevanten Mensch-Maschine-Schnittstelle ein eichrechtkonformer Betrieb nicht mehr möglich ist. Es ist der Katalog der Stör- und Fehlermeldungen in dieser Betriebsanleitung zu beachten.
5. Der Verwender muss die aus der Ladeeinrichtung ausgelesenen, signierten Datenpakete – entsprechend der Paginierung lückenlos dauerhaft (auch) auf diesem Zweck gewidmeter Hardware in seinem Besitz speichern („dedizierter Speicher"), - für berechtigte Dritte verfügbar halten (Betriebspflicht des Speichers.). Dauerhaft bedeutet, dass die Daten nicht nur bis zum Abschluss des Geschäftsvorganges gespeichert werden müssen, sondern mindestens bis zum Ablauf möglicher gesetzlicher Rechtsmittelfristen für den Geschäftsvorgang. Für nicht vorhandene Daten dürfen für Abrechnungszwecke keine Ersatzwerte gebildet werden.
6. Der Verwender dieses Produktes hat Messwertverwendern, die Messwerte aus diesem Produkt von ihm erhalten und im geschäftlichen Verkehr verwenden, eine elektronische Form einer von der CSA genehmigten Betriebsanleitung zur Verfügung zu stellen. Dabei hat der Verwender dieses Produktes insbesondere auf die Nr. II „Auflagen für den Verwender der Messwerte aus der Ladeeinrichtung" hinzuweisen.
7. Den Verwender dieses Produktes trifft die Anzeigepflicht gemäß § 32 MessEG (Auszug): §32 Anzeigepflicht(1) Wer neue oder erneuerte Messgeräte verwendet, hat diese der nach Landesrecht zuständigen Behörde spätestens sechs Wochen nach Inbetriebnahme anzuzeigen[...]
8. Soweit es von berechtigten Behörden als erforderlich angesehen wird, muss vom Messgeräteverwender der vollständige Inhalt des dedizierten lokalen oder des Speichers beim CPO mit allen Datenpaketen des Abrechnungszeitraumes zur Verfügung gestellt werden.

II Auflagen für den Verwender der Messwerte aus der Ladeeinrichtung (EMSP)

Der Verwender der Messwerte hat den § 33 des MessEG zu beachten:

§33 MessEG (Zitat)

§ 33 Anforderungen an das Verwenden von Messwerten

(1) Werte für Messgrößen dürfen im geschäftlichen oder amtlichen Verkehr oder bei Messungen im öffentlichen Interesse nur dann angegeben oder verwendet werden, wenn zu ihrer Bestimmung ein Messgerät bestimmungsgemäß verwendet wurde und die Werte auf das jeweilige Messergebnis zurückzuführen sind, soweit in der Rechtsverordnung nach § 41 Nummer 2 nichts anderes bestimmt ist. Andere bundesrechtliche Regelungen, die vergleichbaren Schutzzwecken dienen, sind weiterhin anzuwenden.

(2) Wer Messwerte verwendet, hat sich im Rahmen seiner Möglichkeiten zu vergewissern, dass das Messgerät die gesetzlichen Anforderungen erfüllt und hat sich von der Person, die das Messgerät verwendet, bestätigen zu lassen, dass sie ihre Verpflichtungen erfüllt.

(3) Wer Messwerte verwendet, hat

1. dafür zu sorgen, dass Rechnungen, soweit sie auf Messwerten beruhen, von demjenigen, für den die Rechnungen bestimmt sind, in einfacher Weise zur Überprüfung angegebener Messwerte nachvollzogen werden können und

2. für die in Nummer 1 genannten Zwecke erforderlichenfalls geeignete Hilfsmittel bereitzustellen.

Für den Verwender der Messwerte entstehen aus dieser Regelung konkret folgende Pflichten einer

eichrechtkonformen Messwertverwendung:

1. Der Vertrag zwischen EMSP und Kunden muss unmissverständlich regeln, dass ausschließlich die Lieferung elektrischer Energie und nicht die Ladeservice-Dauer Gegenstand des Vertrages ist.
2. Die Zeitstempel an den Messwerten stammen von einer Uhr in der Ladesäule, die nicht nach dem Mess- und Eichrecht zertifiziert ist. Sie dürfen deshalb nicht für eine Tarifierung der Messwerte verwendet werden.
3. Fordert der Kunde einen Beweis der richtigen Übernahme der Messergebnisse aus der Ladeeinrichtung in die Rechnung, ist der Messwerteverwender entsprechend MessEG § 33, Abs. (3) verpflichtet, diesen zu erbringen. Fordert der Kunde einen vertrauenswürdigen dauerhaften Nachweis gem. Anlage 2 10.2 MessEV, ist der Messwerteverwender verpflichtet ihm diesen zu liefern. Dies kann auf folgende Arten erfolgen:
   - Beim Laden mit Dauerschuldverhältnis über den textlichen Vertrag
   - Beim punktuellen Laden mittels (kontaktloser) Geldkarte über den Kontoauszug
4. Der EMSP muss dem Kunden die abrechnungsrelevanten Datenpakte zum Zeitpunkt der Rechnungsstellung einschließlich Signatur als Datenfile in einer Weise zur Verfügung stellen, dass sie mittels der Transparenz- und Displaysoftware auf Unverfälschtheit geprüft werden können. Die Zurverfügungstellung kann über eichrechtlich nicht geprüfte Kanäle erfolgen.
5. Der EMSP muss dem Kunden die zur Ladeeinrichtung gehörige Transparenz- und Displaysoftware zur Prüfung der Datenpakete auf Unverfälschtheit verfügbar machen.
6. Der EMSP muss beweissicher prüfbar zeigen können, welches Identifizierungsmittel genutzt wurde, um den zu einem bestimmten Messwert gehörenden Ladevorgang zu initiieren. Das heißt, er muss für jeden Geschäftsvorgang und in Rechnung gestellten Messwert beweisen können, dass er diesen die Personenidentifizierungsdaten zutreffend zugeordnet hat. Der EMSP hat seine Kunden über diese Pflicht in angemessener Form zu informieren.
7. Der EMSP darf nur Werte für Abrechnungszwecke verwenden, die in einem ggf. vorhandenen dedizierten Speicher in der Ladeeinrichtung und oder dem Speicher beim Betreiber der Ladeeinrichtung vorhanden sind. Ersatzwerte dürfen für Abrechnungszwecke nicht gebildet werden.
8. Der EMSP muss durch entsprechende Vereinbarungen mit dem Betreiber der Ladeeinrichtung sicherstellen, dass bei diesem die für Abrechnungszwecke genutzten Datenpakete ausreichend lange gespeichert werden, um die zugehörigen Geschäftsvorgänge vollständig abschließen zu können.
9. Der EMSP hat bei begründeter Bedarfsmeldung zum Zwecke der Durchführung von Eichungen, Befundprüfungen und Verwendungsüberwachungsmaßnahmen durch Bereitstellung geeigneter Identifizierungsmittel die Authentifizierung an den von ihm genutzten Exemplaren des zu dieser Betriebsanleitung gehörenden Produktes zu ermöglichen.

10. Der EMSP muss sicherstellen, dass dem Kunden automatisch (z.B. über das Hinterlegen seiner E-Mail-Adresse auf einer Webseite) nach Abschluss der Messung und spätestens zum Zeitpunkt der Rechnungslegung ein Beleg der Messung und der Angaben zur Bestimmung des Geschäftsvorgangs zugestellt wird, solange dieser hierauf nicht ausdrücklich verzichtet. Diese Zustellung kann in elektronischer Form erfolgen z.B. via SMS oder Email.
11. Alle vorgenannten Pflichten gelten für den EMSP als Messwerteverwender im Sinne von § 33 MessEG auch dann, wenn er die Messwerte aus den Ladeeinrichtungen über einen Roaming-Dienstleister bezieht.

[1] = Quelle: https://www.bundesnetzagentur.de (https://www.bundesnetzagentur.de)

See also

Display of charge points, Federal Network Agency (https://www.bundesnetzagentur.de/DE/Sachgebiete/ElektrizitaetundGas/Unternehmen_Institutionen/HandelundVertrieb/Ladesaeulen/Anzeige_Ladepunkte_node.html)

Commissioning report, Federal Network Agency (https://www.bundesnetzagentur.de/SharedDocs/Downloads/DE/Sachgebiete/Energie/Unternehmen_Institutionen/HandelundVertrieb/Ladesaeulen/Inbetriebnahmeprotokoll.pdf?__blob=publicationFile&v=1)

A.9 Debit card

General information about paying with debit card/Giro-e

The Giro-e function of the charging station supports payment with a debit card. This type of payment does not require a registration with the operator of the charging station.

You can find the current terms of use of Giro-e here (https://giro-e.de).

Explanation of pUID

pUID means **P**ayment **U**ser **Id**entifikation

The pUID is assigned once by Giro-e for each charging request and is not used again. This means the ID cannot be assigned twice.
During invoicing, the pUID is used as SEPA-ID. Each charging process is therefore unique and is only assigned once in the invoices and withdrawals.

The pUID has the following characteristics:

- Alphanumeric
- 10 digits
- Upper and lower case
- No use of characters that may be confused with other characters, such as zero and the capital letter 'O', lowercase 'L', etc.

The first character defines the syntax definition, the second character the addressed receiver. This means the available number of characters is 56^8 per receiver, that is,
96 717 311 574 016 combinations.
Once this supply of characters is exhausted, a new layout can be defined using the first digit of the pUID. For example, an 11-digit syntax with a greater supply of characters.

Procedure to start charging

The card reader reads the following data of the debit card:

- PAN
- Card sequence number
- Expiration date
- Card signature

This information is encrypted immediately with the PublicKey by Giro-e and signed with the PrivateKey of the charging point. This data record also includes a randomly generated request ID (rUID). This data record is sent to the receiver by Giro-e and stored as hash value in the charging point. Storage in the charging point is necessary to assign the charging confirmation and the charging end to the customer using the debit card.

The IBAN of the user is stored exclusively in the secure environment of Giro-e. This prevents tapping of the readable IBAN along the communication path and at the charging point.

The receiver of Giro-e decrypts the receive data record and checks it for the following characteristics:

- Verified signature of the charging point
- Validity of the debit card
- Locking characteristics of the debit card

For an approved card, the receiver of Giro-e generates a 10-digit payment ID (pUID) for the charging request.
The response data record includes the following data:

- Request ID (rUID)
- Payment ID (pUID)
- Display text

This data record is signed with the PrivateKey of Giro-e and sent to the charging point. The signature verifies the sender for the charging point.

Procedure to end charging

When charging is completed, the following data is signed and transferred to the receiver of Grio-e with the pUID as identifier:

- Initial meter status
- Final meter status
- Charged energy in kWh
- Start time of charging
- End time of charging

The IBAN is not included in this communication.
The data required by the calibration law are saved with the pUID as identification by the charging point. Signed meter values are generally supported in Giro-e.

Debit

Giro-e uses the received data and the price components of the charging point to calculate the amount for the SEPA direct debiting. The SEPA direct debiting transfers the pUID as SEPA-ID. This means the identification of the charging process is included in the transaction display of the bank account. The amount is usually withdrawn from the account associated with the debit card within two business days.

The following graphic shows a sample usage purpose of the SEPA debit. The display and order of the transaction texts by the Giro-e can vary.

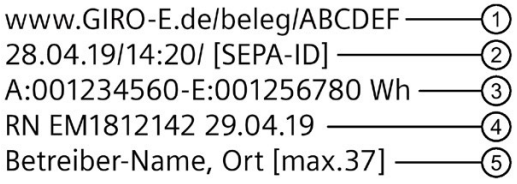

① Individual Internet link to the detailed charging receipt

② Time stamp charging start and pUID (SEPA-ID)

③
- For one charging process per day per operator:
  Meter status at the start and end of the charging process
- In case of multiple charging processes per day per operator:
  Collective billing of multiple processes and view in the web charging receipt

④ Invoice number and billing date

⑤ Operator name and address (up to the permitted number of characters)

Figure A-6 Sample usage purpose of the SEPA debit

Opening billing

You need the following to open billing:

- IBAN of the debit card
- Retrieval code of the charging process

A retrieval code code is included in the use field of the SEPA debit. This code is shown as an example in the **sample use of the SEPA debit** with "**ABDCEF**".

Follow the instructions for opening billing.

1. Go to the Giro-e homepage under Beleg abrufen (Open receipt) (https://giro-e.de/receipt).
2. Enter the IBAN and the retrieval code code.

3. Click "Show".
4. The bill is displayed. The following graphic shows an example bill.



https://giro-e.de/receipt

Giro-e Home Infos Buchungen Anmeldung Admin Impressum

Der Betrag wurde am 16.11.2020 mit der SEPA-ID AA11111T6w eingezogen.

Abrechnung durch Westfalen Weser Netz GmbH, Bielefelder Str. 3 (Verwaltung), 32051 Herford, DE

Einzelposten

Ladevorgang AA11111T6w

Ladezeit: 13.11.20, 12:17 - 13:48
Ort: Bielefelder Straße 3, 32051 Herford, DE
Ladepunkt-EVSEID: DE*WWN*E10BA3*01
Autorisierungs-Medium: Girokarte DE76 4306 0967 [redacted] 00
Energiezähler-Wert Anfang: 342,970 kWh; Ende: 353,590 kWh

Position	Messwert	Grundpreis	MWSt	Brutto
Start	1	0,35 €	16 %	0,35 €
Verbrauch	10,620 kWh	0,38 € / kWh	16 %	4,04 €
Zeit	1:31:26 Std.	0,00 € / Std	16 %	0,00 €
Allgemeiner Rabatt			16 %	
Zwischensumme				**4,39 €**
Summe Ladevorgang AA11111T6w				

Eine eichrechtlich sichere Überprüfung der Messergebnisse von Ladevorgängen ist über die Nutzung der Transparenzsoftware des Ladesäulenherstellers möglich. Der signierte Datensatz kann [hier] abgerufen werden, der verbindliche Public Key des Zählers ist an der Ladestation abzulesen und informell ebenfalls [hier] zum Abruf bereitgestellt.

Figure A-7 Opening the charging process

The signed data record and the public key of the meter are available for download via the link.

A.10 Transparency software

A.10.1 Retrieving measured values

This procedure does not apply to Giro-e. The procedure is described in the section Debit card (Page 128).

Retrieving the signed readings

In order to obtain energy for the electric vehicle, you must be registered with an operator.

With these login details, you can register with the operator of the charging station. After logging in with the operator, you can download the signed measurement data. You can use the Transparency software to open the downloaded file.

Note

Sequence of measured value retrieval

This section describes how to store the signed measured values locally using the backend operator Has.To.Be as an example.

Login to the provider

1. Open an Internet browser
2. Enter **https://certifications.htb.solutions/** in the address line.
3. Click "Enter"
4. Sign in with your credentials

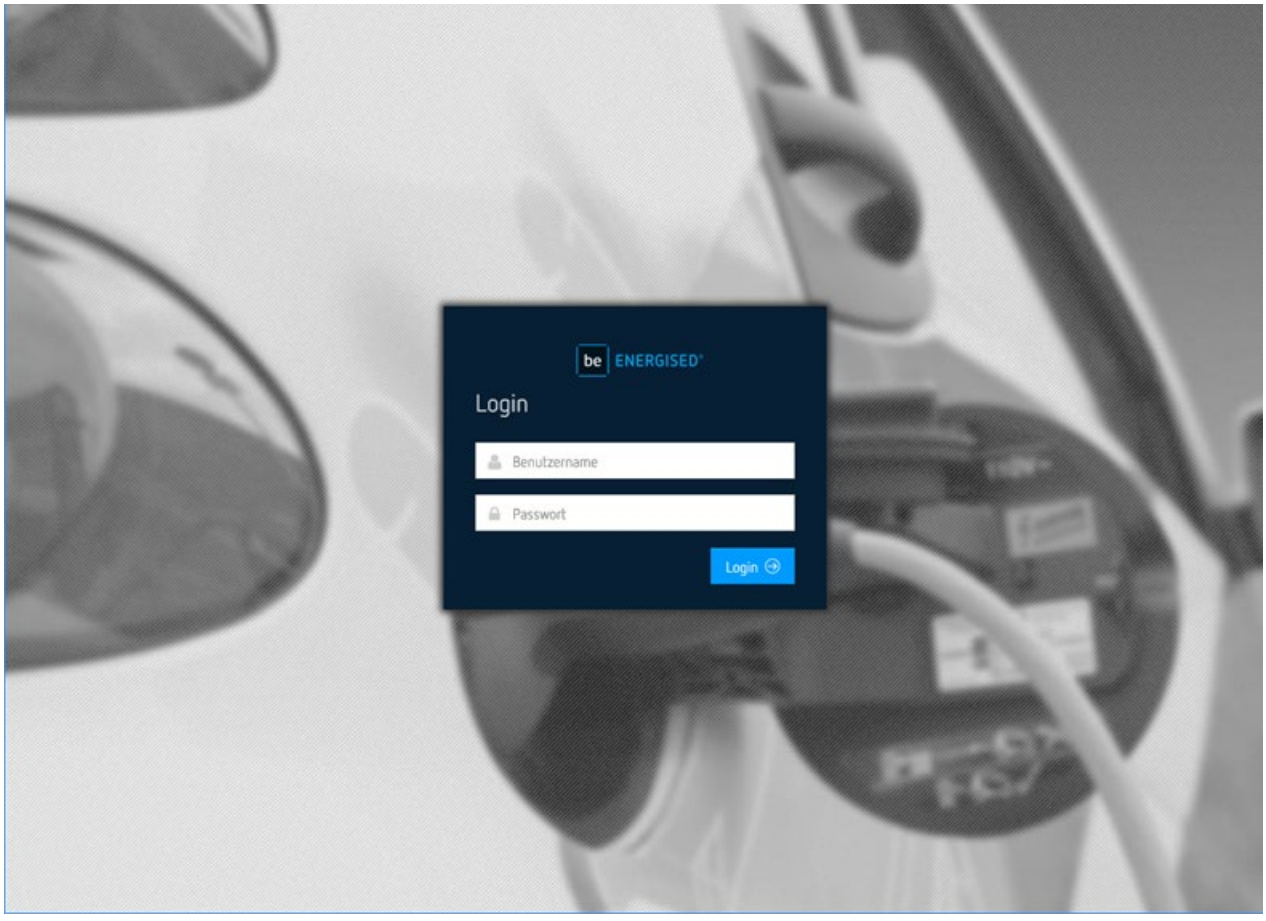

Figure A-8 Login

Charging stations

1. Select the tab **Dashboard**
2. Click **DETAILS** in the field **Ladestationen**

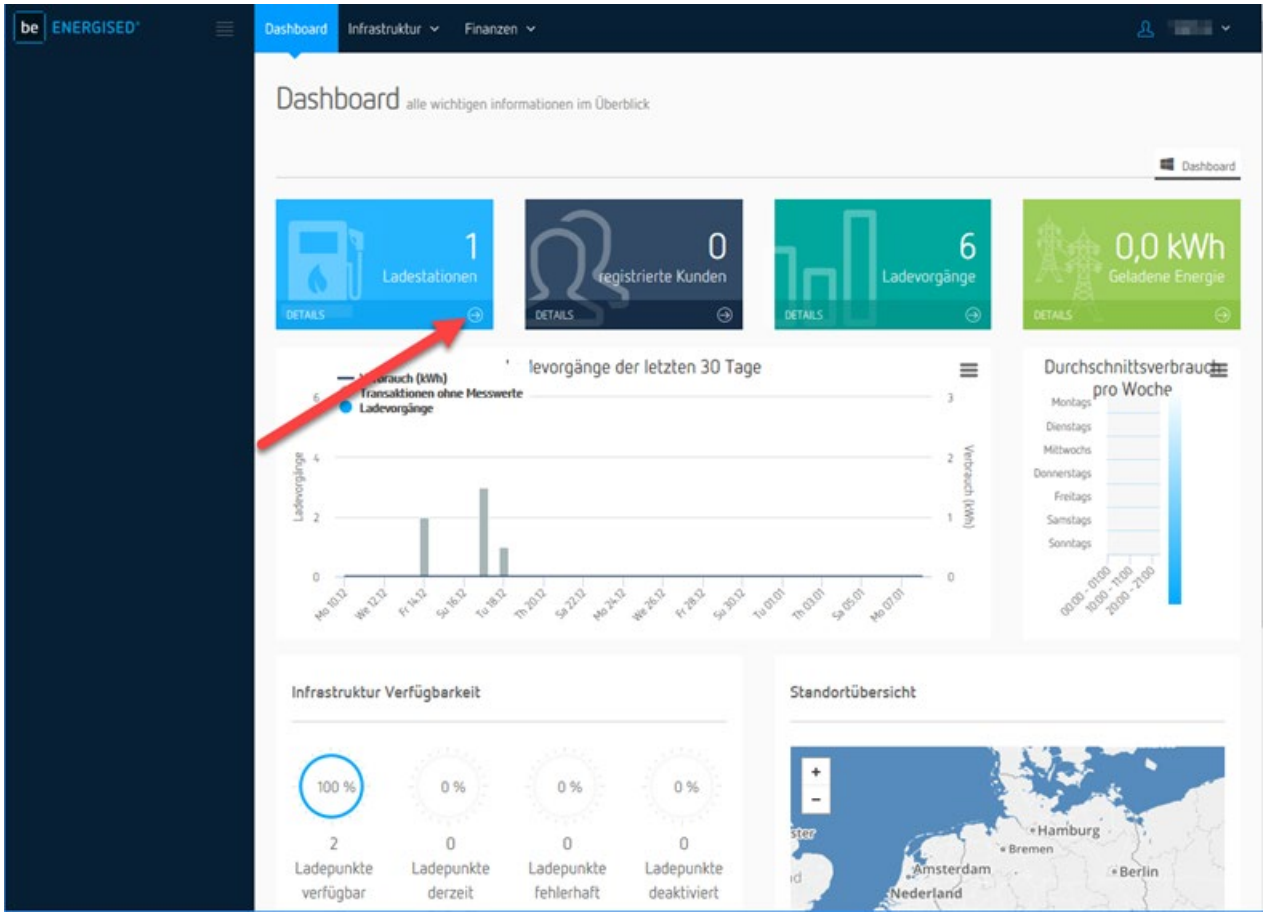

Figure A-9 Charging stations

Charging column

Click on the data field for the corresponding charging column.

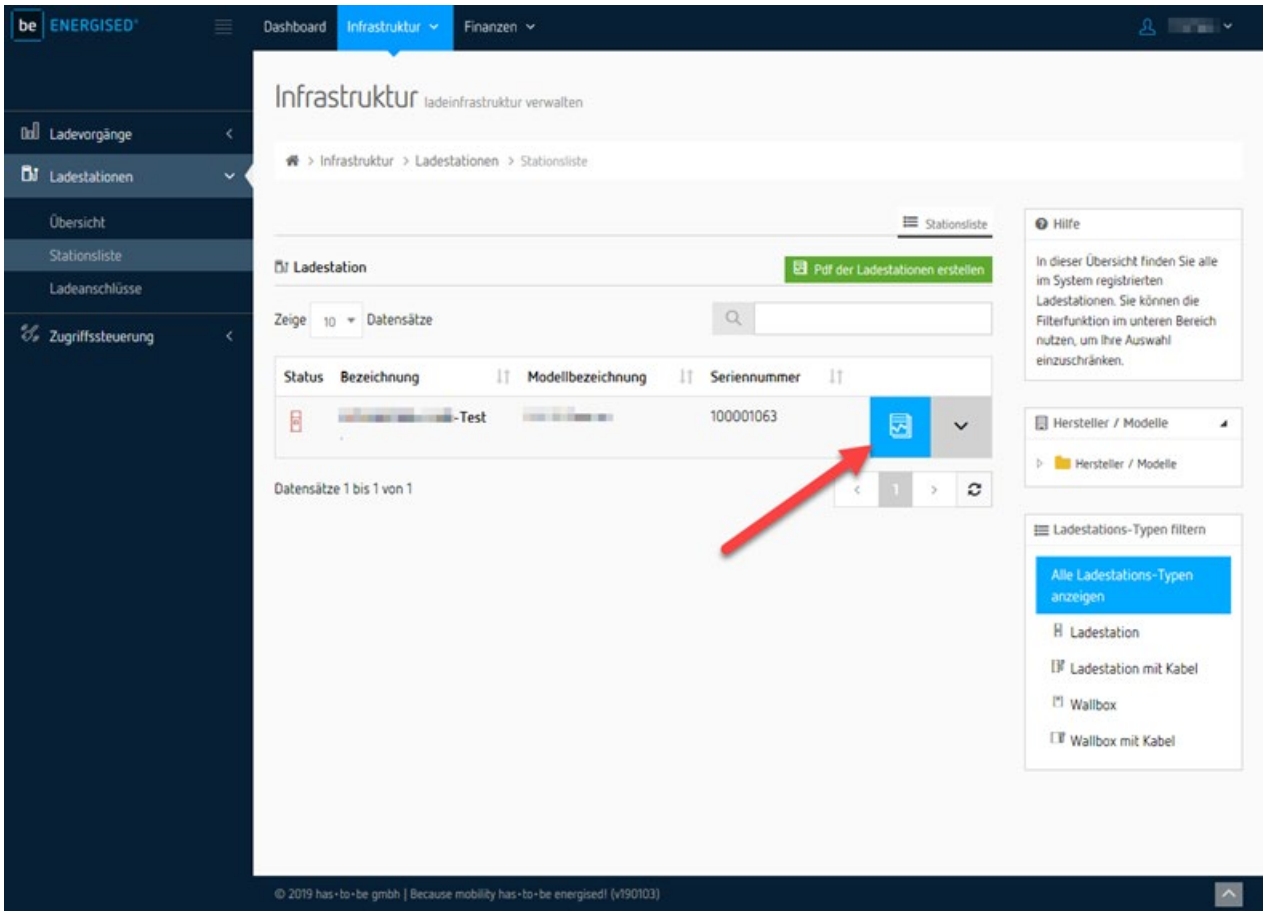

Figure A-10 Charging column

Charging processes

Click the arrow next to **DETAILS** in the field **Ladevorgänge**.

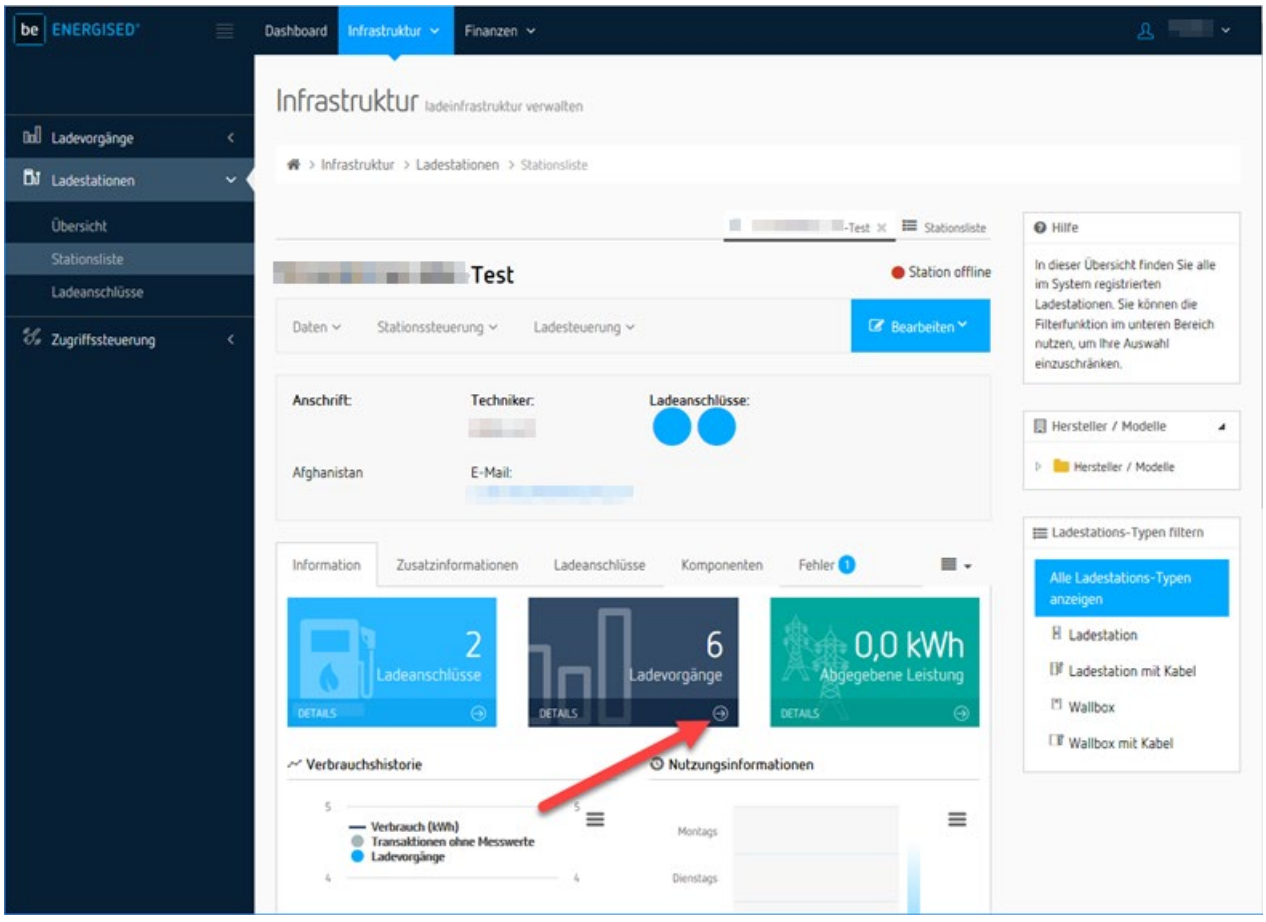

Figure A-11 Charging processes

Selecting the charging process

Select the charging process and click on the right of the appropriate field.

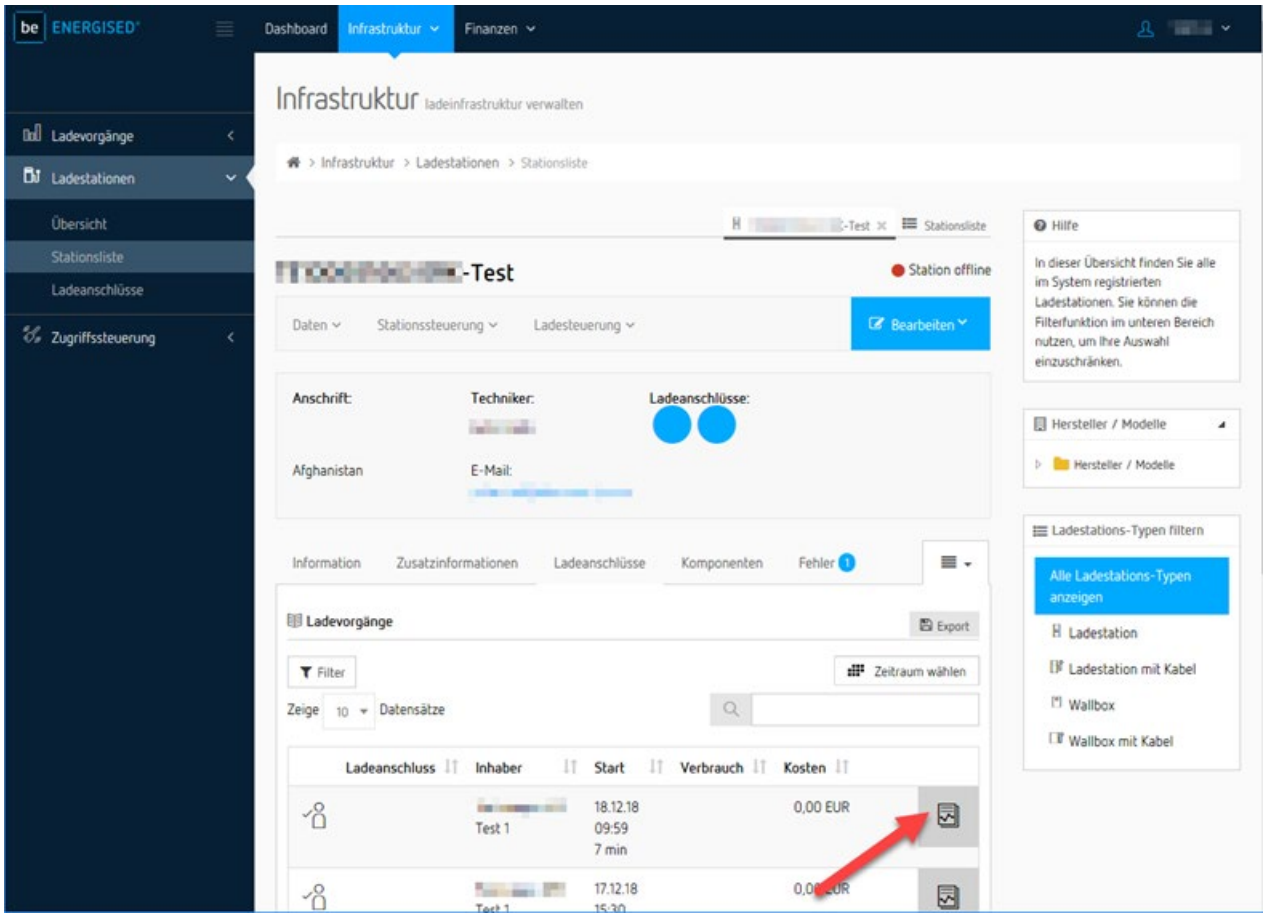

Figure A-12 Charging process

Signed measured values

Click the **Signierte Messwerte** tab.

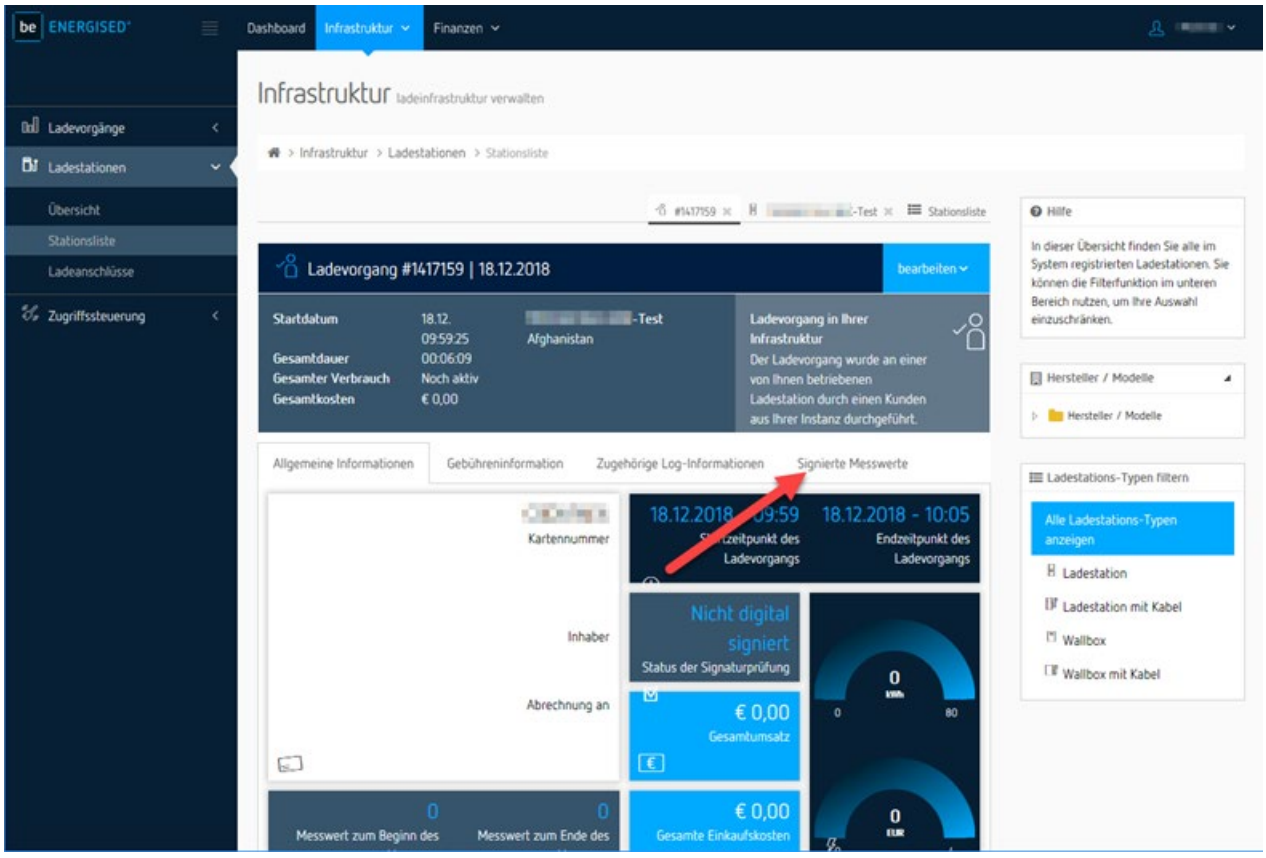

Figure A-13 Signed measured values

Downloading the measured values

Click on the arrow to download the signed measured values of the charging process.

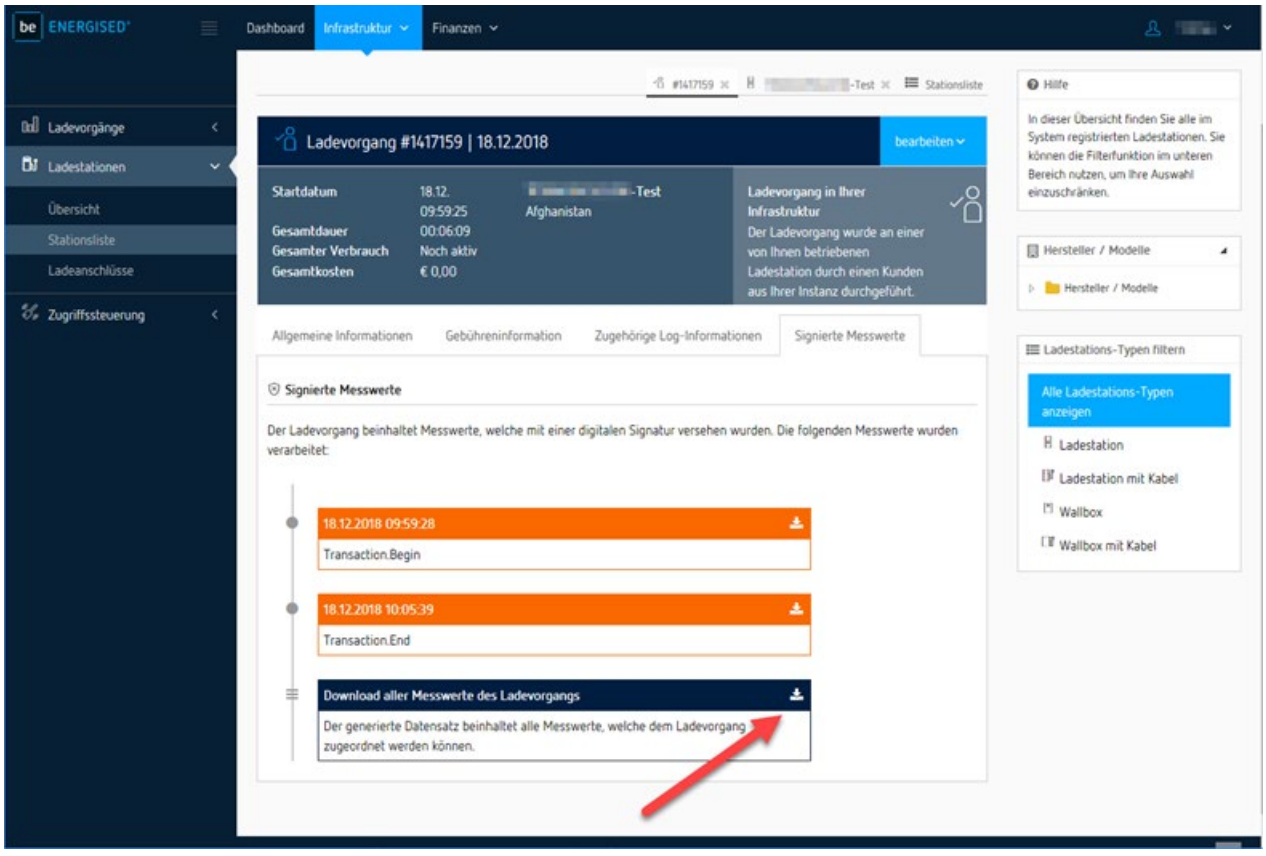

Figure A-14 Download

Result

The file with the signed measured values in *.xml format, the selected charge process, is stored locally on your device.

The next section describes how to use the Transparency software to open the file and check the charging processes.

A.10.2 Installation and operation

Installation and setup of the Transparency software

To install and commission the application, proceed as follows:

1. Download the Transparency software version 1.0 (https://transparenz.software/) to your computer.
2. Extract this file into any folder.
3. Make sure the JAVA framework is installed in an up-to-date version.
4. Open the Transparency software by double-clicking.

The Transparency software supports the following signature processes (https://has-to-be.com/en/development-resources/transparenzsoftware/dateiformat-datensatz/):

- OCMF version 0.2
- EDL40 E-Mobility Extension (EMH Metering)
- EDL40 E-Mobility Extension Sig. (ebee smart technologies)
- Data format of Alfen B.V.

Notes on operating the Transparency software

1. Open the installed application.
2. Select the tab "Datei - Öffnen".
3. Select the previously loaded measured value file (*.xml) with Öffnen.
4. File and signature formats will be detected automatically.

5. You can also find the public key pre-filled in the text box.
   You can now manipulate the existing data in the text data to, for example, falsify test results.
6. To check the signature, click "Überprüfen".

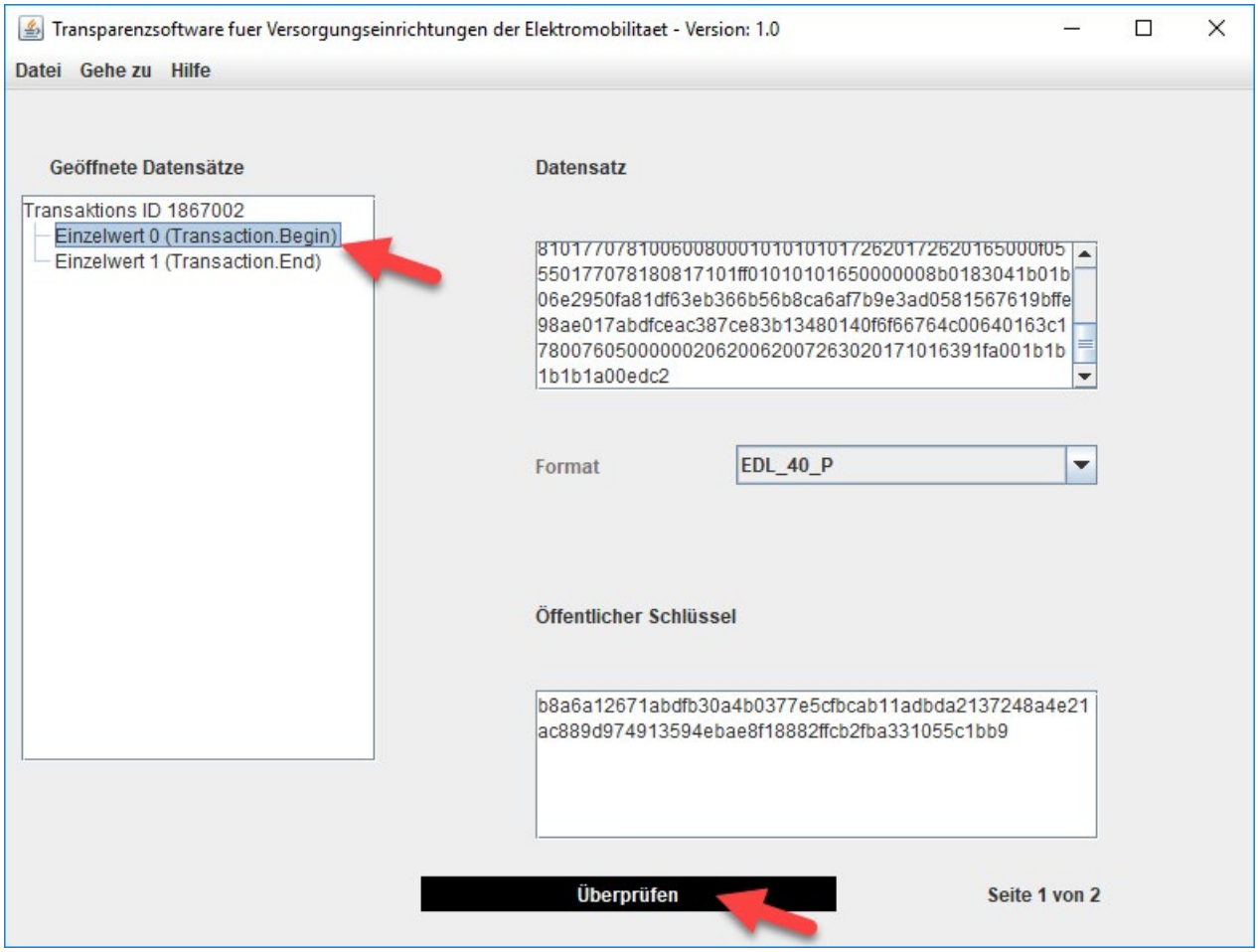

Figure A-15 Open the Transparency software data record

Signature verification

The result of the signature verification is displayed in a new window. In this signature window, you can see all the information that was contained in the signed data record.

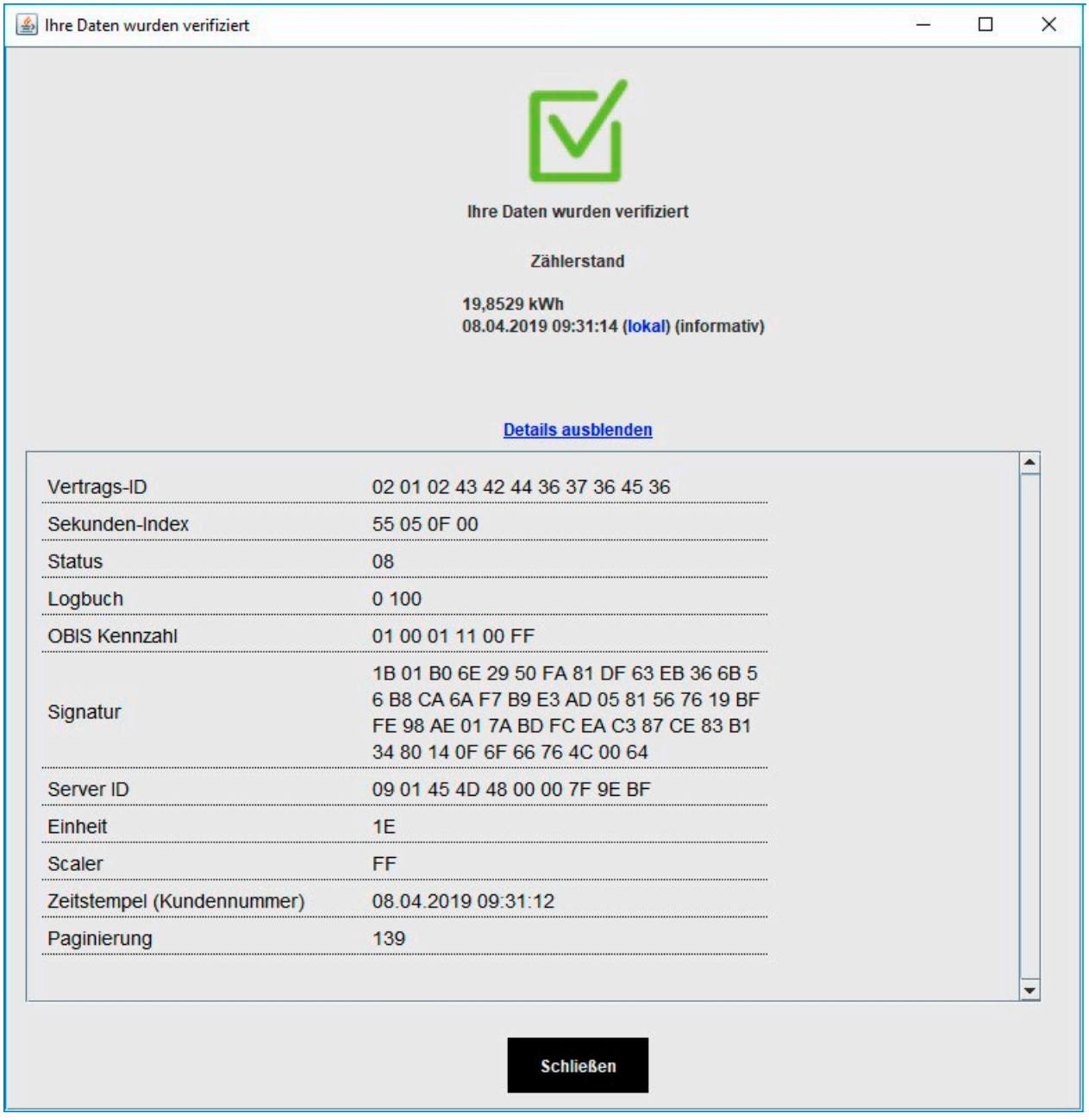

Figure A-16 Transparency software data record result

Checking the transaction

After having selected the transaction in the overview of the open data records, click "Transaktion überprüfen" to check the transaction.

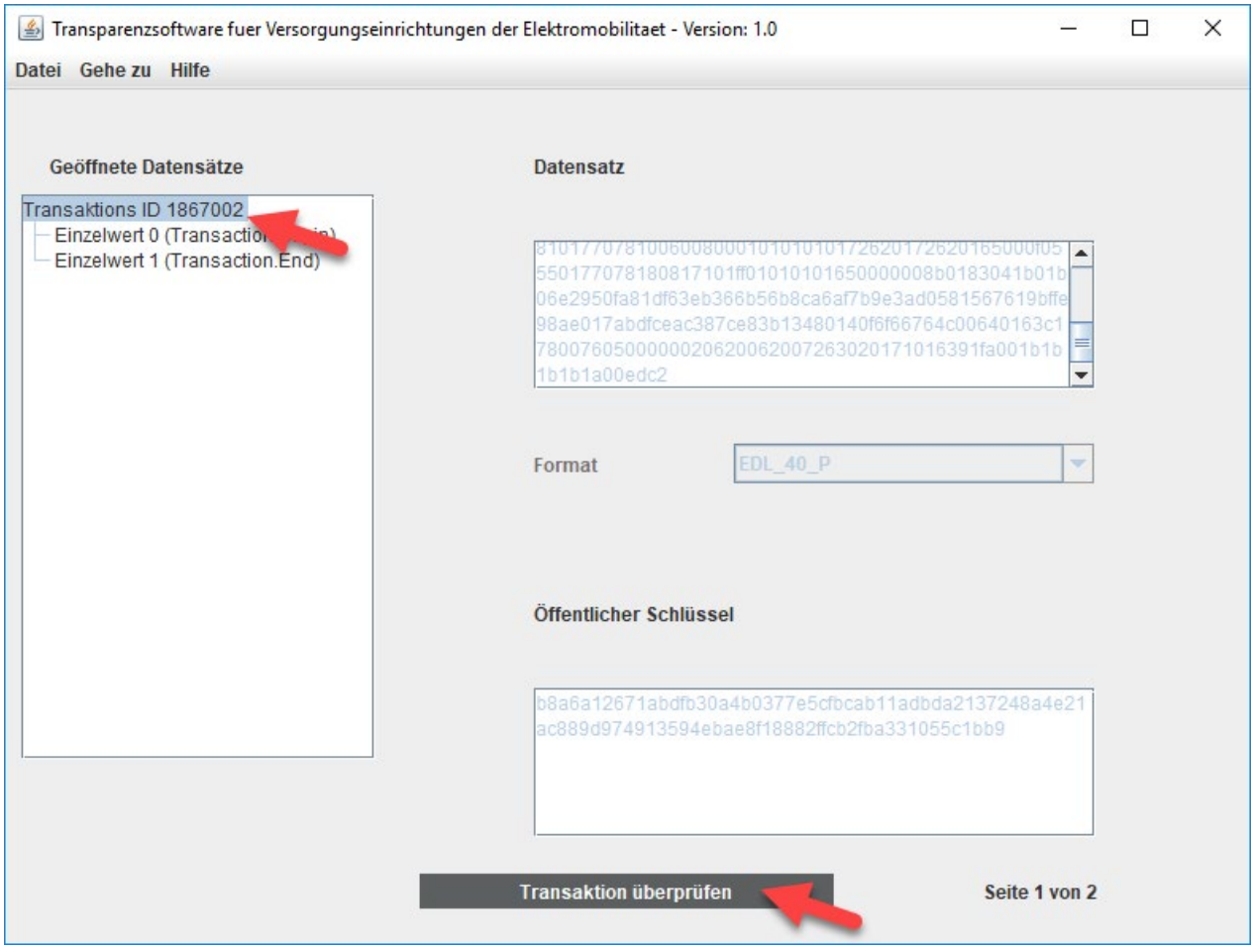

Figure A-17 Check the Transparency software transaction

Result

The test result will now also show the difference between the start and the stop meter status.



Figure A-18 Transparency software transaction result

A.10.3 Implementation

Implementation of the signature conversion

If you as the operator would like to check your implementation of the signature conversion, proceed as follows:

1. Copy the signature data and the public key from your signature data record into the corresponding fields in the Transparency software.
2. Check the signature.
   Alternatively, you can also convert the signature data into the file format of the Transparency software (https://has-to-be.com/en/development-resources/transparenzsoftware/dateiformat-datensatz/) to load it into the application with "Datei - Öffnen".

Implementation via the command line

For automated signature checking, you can also launch the application from the command line to use the application in an automated process.

Use the following command to start the signature check via the command line using the provided test data record:

java -jar Transparenzsoftware.jar -cli -f test_file_ocmf.xml

The Transparency software then performs the signature verification of the provided signature data, and outputs the result in a structured XML data record. The images show the result of the signature check and the data output.

```
<?xml version="1.0" encoding="UTF-8" standalone="yes"?>
<results>
    <result>
        <status>Verified</status>
        <signedData format="OCMF" encoding="plain">OCMF|
        {"FV":"0.1","VI":"ABL","VV":"1.4p3","PG":"T12345","MV":"Phoenix
        Contact","MM":"EEM-350-D-
        MCB","MS":"BQ27400330016","MF":"1.0","IS":"VERIFIED","IF":
        ["RFID_PLAIN","OCPP_RS_TLS"],"IT":"ISO14443","ID":"1F2D3A4F5506C7","RD":
        [{"TM":"2018-07-24T13:22:04,000+0200 S","TX":"B","RV":2935.6,"RI":"1-
        b:1.8.e","RU":"kWh","EI":567,"ST":"G"}]}|{"SA":"ECDSA-secp256k1-
        SHA256","SD":"3046022100A7F1FD39278A88432E1AB81229C34CE1066885D0EAD8810DB900018A4
        960888302210089004420623749BF75561F29685CD87D6853EC08E83BD1A15C5DAFF9F03F4115"}
        </signedData>
        <publicKey
        encoding="plain">3056301006072A8648CE3D020106052B8104000A034200044E4970098EEFF5E0
        E286E3A38552679771B89315A49DDDF66EBAC6F176FB02DF9841091010E6850510540DAD0CF967FD8
        DE0AB25198282B39597DDCE09EDF459</publicKey>
```

Figure A-19 xml signature verification

```
        <verifiedData xsi:type="ocmfVerifiedData" encoding="PLAIN" format="OCMF"
        xmlns:xsi="http://www.w3.org/2001/XMLSchema-instance">
            <publicKey>30 56 30 10 06 07 2A 86 48 CE 3D 02 01 06 05 2B 81 04 00 0A 03 42
            00 04 4E 49 70 09 8E EF F5 E0 E2 86 E3 A3 85 52 67 97 71 B8 93 15 A4 9D DD F6
            6E BA C6 F1 76 FB 02 DF 98 41 09 10 10 E6 85 05 10 54 0D AD 0C F9 67 FD 8D E0
            AB 25 19 82 82 B3 95 97 DD CE 09 ED F4 59</publicKey>
            <encoding>PLAIN</encoding>
            <formatVersion>0.1</formatVersion>
            <vendorIdentification>ABL</vendorIdentification>
            <vendorVersion>1.4p3</vendorVersion>
            <pagination>T12345</pagination>
            <meterVendor>Phoenix Contact</meterVendor>
            <meterModel>EEM-350-D-MCB</meterModel>
            <meterSerialNumber>BQ27400330016</meterSerialNumber>
            <meterFirmwareVersion>1.0</meterFirmwareVersion>
            <identificationStatus>VERIFIED</identificationStatus>
            <identificationFlags>RFID_PLAIN, OCPP_RS_TLS</identificationFlags>
            <identificationType>ISO14443</identificationType>
            <identificationData>1F2D3A4F5506C7</identificationData>
            <meters>
                <value>2935.6</value>
                <timestamp>2018-07-24T13:22:04+02:00</timestamp>
            </meters>
        </verifiedData>
    </result>
</results>
```

Figure A-20 xml sample output

Verification of Contract ID in the signed readings

The RFID card number or debit card number is used as Contract-ID . You can view the number in the backend.
The card number is CBD676E6 in this example.
In the Transparency software, this number can be found under Vertrags-ID or Contract-ID in the details of a measured value reading.

The following graphic shows the layout of the contract ID using an RFID card as an example.

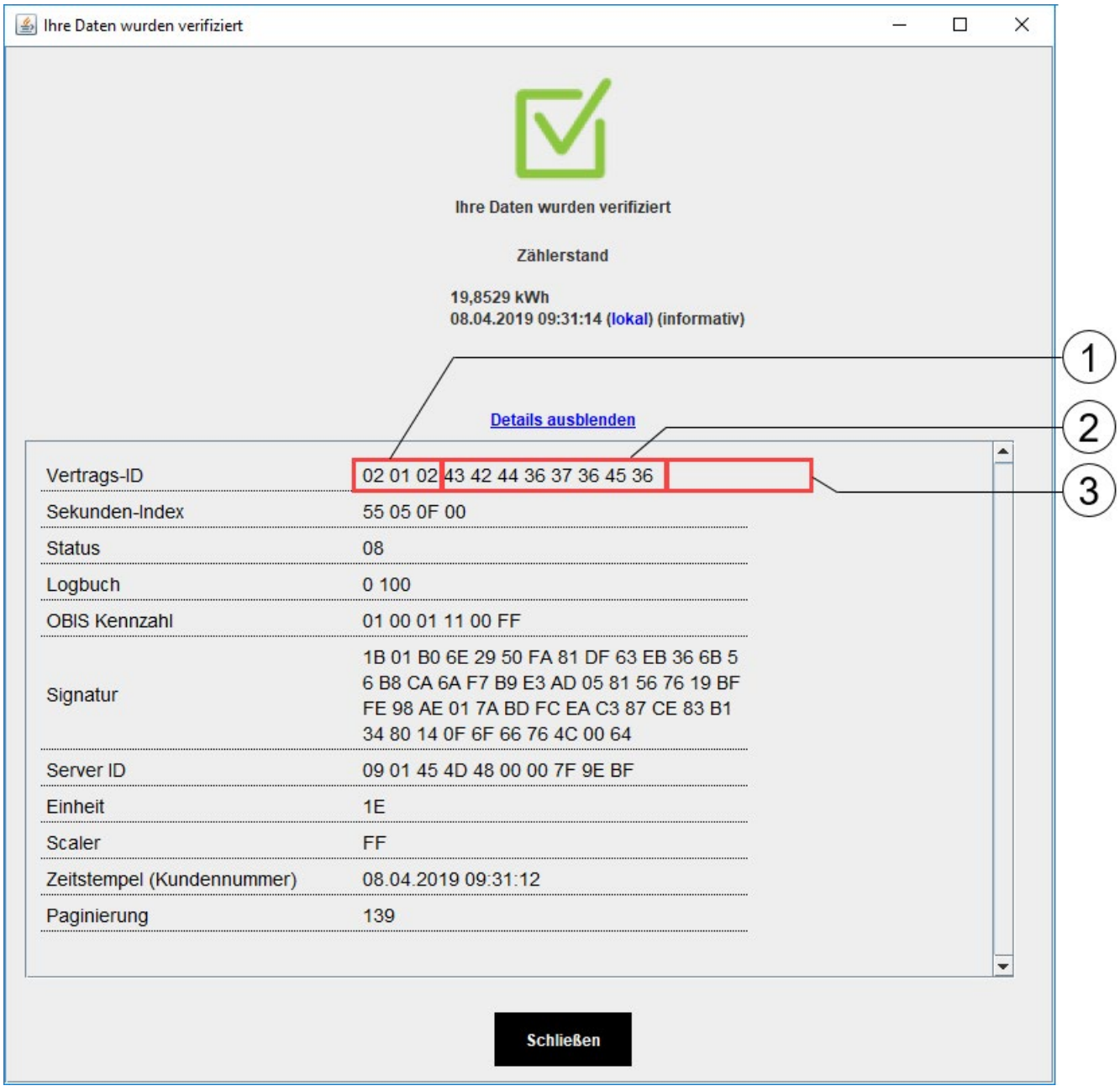

① Version number of the charging controller firmware coded as an integer
② Card number in ASCII code
③ pUID (SEPA-ID) when paying with Giro-e in ASCII code

Figure A-21 Contract ID explanation

For billing using Giro-e, the Contract-ID also includes the pUID (SEPA-ID). The "Contract ID explanation" graphic shows the marked area ③.
The length of the contract ID is determined by these factors:

- Version number of the charging controller firmware
- Card number
- Login method, e.g., RFID, Giro-e

Explanation of the version number

This number consists of several bytes. A byte is always written in hexadecimal notation with 2 characters. Bytes 0 - 2 encode the version number of the charging controller firmware as an integer.

Table A- 3 Explanation of the version number

Position	Meaning
Byte 0	Major revision
Byte 1	Minor revision
Byte 2	Patch revision

In this example, the version number is: 2.1.2

Conversion example card number

The card number is given in ASCII code in the following bytes. After the conversion example of the following table, the card number is derived from this, as is also shown in the backend.

Table A- 4 Conversion example card number

Position	Characters in the Transparency software (hex)	Decoded card number (ASCII)
Byte 3	43	C
Byte 4	42	B
Byte 5	44	D
Byte 6	36	6
Byte 7	37	7
Byte 8	36	6
Byte 9	45	E
Byte 10	36	6

Conversion example pUID for Giro-e

In the next byte, the pUID (SEPA-ID) is included in an ASCII code for billing using Giro-e. In the Figure A-7 Opening the charging process (Page 131) graphic, the pUID (SEPA-ID) is "AA11111T6w". In the conversion example of the following table, this results in the characters as they are shown in the Contract-ID.

Table A- 5 Conversion example pUID for Giro-e

Position	Characters in the Transparency software (hex)	Decoded card number (ASCII)
Byte 11	41	A
Byte 12	41	A
Byte 13	31	1
Byte 14	31	1
Byte 15	31	1
Byte 16	31	1
Byte 17	31	1
Byte 18	54	T
Byte 19	36	6
Byte 20	77	w

See also

Debit card (Page 128)

A.11 Quality documentation

CE marking

SICHARGE CC AC22 charging station meets the general and safety-related requirements of the following directives, and conforms to the harmonized European standards (EN) for controllers published in the official journals of the European Community:

- EN 61851-1:2011 "Electrical equipment of electrical road vehicles - conductive charging systems for electric vehicles - Part 1-2: General requirements
- EN 61851-22:2002 "Electrical equipment of electrical road vehicles - conductive charging systems for electric vehicles - Part 2-2: AC charging station for electric vehicles
- EN 61000-6-3:2007+A1:2011 "Electromagnetic compatibility (EMC) - Part 6-3: Generic standards - emission standard for residential areas, business and commercial operations, and small businesses
- EN 61000-3-11:2000 "Electromagnetic compatibility (EMC) - Part 3-11: Limits; limitation of voltage changes, voltage fluctuations and flicker in public low-voltage supply systems; equipment with rated current <= 75 A that is subject to conditional connection
- EN 61000-3-12:2011 "Electromagnetic compatibility (EMC) - Part 3-12: Limits - limits for harmonic currents produced by equipment with input current of > 16A and <= 75A per each wire, which is intended for connection to public low-voltage systems
- EN 61000-6-1:2007 "Electromagnetic compatibility (EMC) - Part 6-1: Generic standards – interference immunity for residential areas, business and commercial operations, and small businesses

The EC Declarations of Conformity are kept available for the responsible authorities at:

Siemens AG
Smart Infrastructure
Distribution Systems
Mozartstr. 31c
91052 Erlangen, Germany

These files are also available for download on the Siemens Industry Online Support (https://support.industry.siemens.com/cs/ww/en/) pages, under "Declaration of Conformity".

List of abbreviations

B

Ad hoc		Colloquial expression for "provisional"
APN	Access Point Name	Gateway access point
ERM	Electronic household meter	
EMSP	Electromobility Service Provider	Measured value users
EVSE	Electric Vehicle Supply Equipment	
GUI	Graphical User Interface	Graphical user interface
RCCB	Residual Current Circuit Breaker	
IBAN	International Bank Account Number	International Bank Account Number
LVDS	Low Voltage Differential Signaling	
OCPP	Open Charge Point Protocol	
OVP	Over Voltage Protection	
PAN	Primary Account Number	Payment card number
PK	Public Key	
PTB	German Federal Testing Laboratory	
pUID	Payment User Identification	Payment User Identification
RFID	Radio-Frequency Identification	Radio-Frequency Identification
rUID	Request User Identification	Request User Identification
SEPA	Single Euro Payments Area	Single Euro Payments Area
SEPA-ID	Single Euro Payments Area Identifier	Single Euro Payments Area Identifier
SW	Width across flats	