SIEMENS

SINUMERIK

SINUMERIK 802D sl, SINAMICS S120 Machine data and interface signals

Parameter Manual

Preface

Explanation of the machine/ setting data 1

Machine data 2

NC setting data 3

Interface signals - overview 4

Interface signals - detailed description 5

SINAMICS parameters 6

Appendix A A

Valid for:
SINUMERIK 802D sl Version 1.4 SP7

11/2012
6FC5397-5CP10-4BA0

Legal information

Warning notice system

This manual contains notices you have to observe in order to ensure your personal safety, as well as to prevent damage to property. The notices referring to your personal safety are highlighted in the manual by a safety alert symbol, notices referring only to property damage have no safety alert symbol. These notices shown below are graded according to the degree of danger.

⚠DANGER
indicates that death or severe personal injury **will** result if proper precautions are not taken.

⚠WARNING
indicates that death or severe personal injury **may** result if proper precautions are not taken.

⚠CAUTION
with a safety alert symbol, indicates that minor personal injury can result if proper precautions are not taken.

CAUTION
without a safety alert symbol, indicates that property damage can result if proper precautions are not taken.

NOTICE
indicates that an unintended result or situation can occur if the corresponding information is not taken into account.

If more than one degree of danger is present, the warning notice representing the highest degree of danger will be used. A notice warning of injury to persons with a safety alert symbol may also include a warning relating to property damage.

Qualified Personnel

The product/system described in this documentation may be operated only by **personnel qualified** for the specific task in accordance with the relevant documentation for the specific task, in particular its warning notices and safety instructions. Qualified personnel are those who, based on their training and experience, are capable of identifying risks and avoiding potential hazards when working with these products/systems.

Proper use of Siemens products

Note the following:

⚠WARNING
Siemens products may only be used for the applications described in the catalog and in the relevant technical documentation. If products and components from other manufacturers are used, these must be recommended or approved by Siemens. Proper transport, storage, installation, assembly, commissioning, operation and maintenance are required to ensure that the products operate safely and without any problems. The permissible ambient conditions must be adhered to. The information in the relevant documentation must be observed.

Trademarks

All names identified by ® are registered trademarks of the Siemens AG. The remaining trademarks in this publication may be trademarks whose use by third parties for their own purposes could violate the rights of the owner.

Disclaimer of Liability

We have reviewed the contents of this publication to ensure consistency with the hardware and software described. Since variance cannot be precluded entirely, we cannot guarantee full consistency. However, the information in this publication is reviewed regularly and any necessary corrections are included in subsequent editions.

Siemens AG
Industry Sector
Postfach 48 48
90026 NÜRNBERG
GERMANY

order number: 6FC5397-5CP10-4BA0
℗ 11.2012

Copyright © Siemens AG2012.
Technical data subject to change

Preface

SINUMERIK documentation

The SINUMERIK documentation is organized in the following categories:

- General documentation
- User documentation
- Manufacturer/service documentation

Additional information

You can find information on the following topics at www.siemens.com/motioncontrol/docu:

- Ordering documentation/overview of documentation
- Additional links to download documents
- Using documentation online (find and search in manuals/information)

Please send any questions about the technical documentation (e.g. suggestions for improvement, corrections) to the following address:

docu.motioncontrol@siemens.com

My Documentation Manager (MDM)

Under the following link you will find information to individually compile OEM-specific machine documentation based on the Siemens content:

www.siemens.com/mdm

Training

For information about the range of training courses, refer under:

- www.siemens.com/sitrain

  SITRAIN - Siemens training for products, systems and solutions in automation technology
- www.siemens.com/sinutrain

  SinuTrain - training software for SINUMERIK

FAQs

You can find Frequently Asked Questions in the Service&Support pages under Product Support. http://support.automation.siemens.com

SINUMERIK

You can find information on SINUMERIK under the following link:

www.siemens.com/sinumerik

Target group

This publication is intended for project engineers, commissioning engineers, machine operators and service and maintenance personnel.

Benefits

The Parameter Manual provides information on parameters and their effects on the system.

The Parameter Manual enables the intended target group to evaluate fault displays and to respond accordingly.

Standard scope

This Parameter Manual only describes the functionality of the standard version. Additions or changes made by the machine manufacturer are documented by the machine manufacturer.

Other functions not described in this documentation might be executable in the control. However, no claim can be made regarding the availability of these functions when the equipment is first supplied or in the event of servicing.

Furthermore, for the sake of clarity, this documentation does not contain all detailed information about all types of the product and cannot cover every conceivable case of installation, operation or maintenance.

Technical Support

You will find telephone numbers for other countries for technical support in the Internet under http://www.siemens.com/automation/service&support

EC Declaration of Conformity

The EC Declaration of Conformity for the EMC Directive can be found on the Internet at:

http://support.automation.siemens.com

Here, enter the number **15257461** as the search term or contact your local Siemens office.

Table of contents

Preface **3**

1 Explanation of the machine/setting data **9**

1.1 Structure of the data tables 9

1.2 Meaning of table fields 10

1.3 Overview of the data 15

2 Machine data **17**

2.1 Display machine data 17

2.2 General machine data 33
2.2.1 System settings 33
2.2.2 Override switch settings 134
2.2.3 System specific memory settings 156

2.3 Channel-specific machine data 196
2.3.1 Basic channel machine data 196
2.3.2 Machine data for grinding function 253
2.3.3 Channel auxiliary function settings 256
2.3.4 Transformation definitions in channel 278
2.3.5 Punching and nibbling 322
2.3.6 Channel-specific memory settings 335

2.4 Axis-specific machine data 348
2.4.1 Configuration 348
2.4.2 Encoder matching 361
2.4.3 Closed-loop control 366
2.4.4 Reference point approach 401
2.4.5 Spindles 412
2.4.6 Monitoring functions 429
2.4.7 Travel to fixed stop 443
2.4.8 Axis-specific memory settings 463

3 NC setting data **465**

3.1 Setting data 465
3.1.1 General setting data 465
3.1.2 Channel-specific setting data 473
3.1.3 Axis specific setting data 498

4 Interface signals - overview **511**

4.1 Adressranges 511

4.2 User data 513
4.2.1 User data 1 513
4.2.2 User data 2 513
4.2.3 Signals from MCP (connected to the MCPA module) 513
4.2.4 Signals to MCP (connected to the MCPA module) 514
4.2.5 Reading/writing NC data: Job [F20.6] 514

4.2.6 Read/write NC data: Result [F20.6] ... 514
4.3 Retentive data area ... 515
4.4 User alarm ... 515
4.4.1 User alarm: Activation ... 515
4.4.2 Variable for alarm ... 516
4.4.3 Active alarm reaction ... 516
4.5 Signals from/to HMI ... 517
4.5.1 Program control signals from HMI (retentive area) ... 517
4.5.2 Program selection from PLC (retentive area) ... 517
4.5.3 Checkback signal Program selection from HMI (retentive area) ... 517
4.5.4 Signals from HMI ... 518
4.5.5 Signals from PLC ... 518
4.5.6 Signals from operator panel (retentive area) ... 518
4.5.7 General selection/status signals from HMI (retentive area) ... 519
4.5.8 General selection/status signals to HMI (retentive area) ... 519
4.6 Auxiliary function transfer from NC channel ... 520
4.6.1 Decoded M signals: (M0 - M99) ... 520
4.6.2 Transferred T functions ... 521
4.6.3 Transferred M functions ... 521
4.6.4 Transferred S functions ... 521
4.6.5 Transferred D functions ... 522
4.6.6 Transferred H functions ... 522
4.7 NCK signals ... 522
4.7.1 General signals to NCK ... 522
4.7.2 General signals from NCK ... 523
4.7.3 Signals to fast inputs and outputs ... 524
4.7.4 Signal from fast inputs and outputs ... 525
4.7.5 Operating mode signals ... 525
4.8 Channel Signals ... 526
4.8.1 Signals to NC channel ... 526
4.8.2 Signals from NC channel ... 529
4.9 Axis/spindle signals ... 532
4.9.1 Transferred M/S functions, axis-specific ... 532
4.9.2 Signals to axis/spindle ... 532
4.9.3 Signals from axis/spindle ... 536
4.10 PLC machine data ... 540
4.10.1 INT values (MD 14510 USER_DATA_INT) ... 540
4.10.2 HEX values (MD 14512 USER_DATA_HEX) ... 540
4.10.3 FLOAT values (MD 14514 USER_DATA_FLOAT) ... 540
4.10.4 User alarm: Configuration (MD 14516 USER_DATA_PLC_ALARM) ... 541
4.10.5 Reading and writing PLC variables ... 541
4.11 Tool management functions from NC channel ... 542
5 Interface signals - detailed description ... 543
5.1 General ... 543
5.2 Signals from/to HMI ... 544
5.2.1 Program-control signals from HMI ... 544

5.2.2 Signals from HMI ... 546
5.2.3 Signals from operator panel ... 547
5.2.4 General selection/status signals from HMI ... 548
5.2.5 General selection/status signals to HMI ... 549
5.3 Auxiliary function transfer from NC channel ... 550
5.4 NC signals ... 553
5.4.1 General signals to NC ... 553
5.4.2 General signals from NC ... 554
5.5 Mode signals ... 556
5.6 Channel-specific signals ... 560
5.6.1 Signals to channel ... 560
5.6.2 Signals from the channel ... 575
5.7 Axis-/spindle-specific signals ... 585
5.7.1 Transferred axis-specific M and S functions ... 585
5.7.2 Signals to axis/spindle ... 587
5.7.3 Signals from axis/spindle ... 602
5.8 Tool management functions from NC channel ... 613
6 SINAMICS parameters ... 615
6.1 List of parameters ... 615
A Appendix A ... 617
A.1 Abbreviations 802D sl ... 617
A.2 Document tree 802D sl ... 619

Explanation of the machine/setting data

1

1.1 Structure of the data tables

Standard table

The standard table contains all the important information about the data.

MD number	Identifier			Display filter	Reference
Units	Name			Data type	Activation
Attributes					
System	Dimension	Default value	Minimum value	Maximum value	Protection

Expanded table

The expanded table includes data from the standard table plus additional rows with system-specific values.

MD number	Identifier			Display filter	Reference
Units	Name			Data type	Activation
Attributes					
-	Dimension	Default value	Minimum value	Maximum value	Protection
<System 1>	-	Default value	-	-	-/-
<System 2>	-	-	-	-	-1/-

A minus sign "-" in a field means that the same value as for <System 1> applies for the specified system.

The entry "-/-" in the "Protection" field means that the machine data is not available for the specified system.

Example:

10470	SW_CAM_ASSIGN_FASTOUT_1			N09	N3
-	Hardware assignment fгь output of cams 1-8 to NCK IO			DWORD	POWER ON
-					
802d-cu3	-	0	-	-	2/2
802d-ng2	-	0	-	-	2/2
802d-ng3	-	0	-	-	2/2
802d-tm1	-	0	-	-	0/0
802d-tm2	-	0	-	-	0/0
802d-tm3	-	0	-	-	0/0

1.2 Meaning of table fields

MD number

The "MD number" field contains the machine data number. This number is displayed in the data lists on the user interface of the control.

Identifier

The "Identifier" field contains the unique alphanumeric identifier of the machine data. The machine data is, for example, addressed by means of this identifier (with an additional label) for programming in the part program.

This identifier is displayed in the data lists on the user interface of the control.

Reference

The data is described in detail in the specified description of functions or instructions.

Example: [F-S1] Description of Functions 802D sl, chapter spindle

Units/system of units

Depending on MD10240 $MN_SCALING_SYSTEM_IS_METRIC, the physical units differ as follows:

MD10240=1	MD10240=0
mm	inch
mm/min	inch/min
m/sec^2	$inch/sec^2$
m/sec^3	$Inch/sec^3$
mm/rev.	inch/rev.

If the MD is not based on any physical unit, the field is marked with "-".

Note

The default setting is MD10240 $MN_SCALING_SYSTEM_IS_METRIC = 1 (metric)

Name

The "Name" field contains the name of the data in plain text.

Activation

The "Activation" field contains the action that must be performed by the user in order for a change to take effect.

Activation		User action
po	POWER ON	Otherwise: • "Reset(po)" softkey • Switch voltage off/on
cf	NEW_CONF	• "RESET" button at PLC interface (V3000 0000.7) • Changes in program operation at block limits possible
re	RESET	Otherwise: • "RESET" button at PLC interface (V3000 0000.7) • Program end reset (M02/M30)
so	IMMEDIATELY	After entering a value

The activation levels are listed according to their priority.

- po = highest priority
- so = lowest priority

Protection

The "Protection" field contains the protection level for reading or writing to the data in the form: Read/write.

The SINUMERIK 802D sl provides a concept of protection levels for enabling data areas. Protection levels 0 to 7 are available, where 0 represents the highest protection level and 7 the lowest protection level. The protection levels can be set for certain function areas (e.g. program editor) using the display machine data (USER_CLASS...). The control system is delivered with default passwords for the protection levels 1 to 3; if necessary, these passwords can be changed by the person authorized to do so.

Value	Protection level
0 or 10	System
1 or 11	Manufacturer
2 or 12	Service
3 or 13	User
4 or 14	Key-operated switch position 3
5 or 15	Key-operated switch position 2
6 or 16	Key-operated switch position 1
7 or 17	Key-operated switch position 0

The protection level for user data (GUD) is defined with the numbers 10 to 17.

Display filter

The "Display filter" field contains the identifier of the data filter setting that enables the data to be seen. Using the filter setting, the exact data areas required at a given time can be selected for display.

ID	Data area
EXP	Expert mode
General machine data	
N01	Configuration/scaling
N02	Memory configuration
N03	PLC machine data
N04	Drive control
N05	Status data/diagnostics
N06	Monitoring/limiting functions
N07	Auxiliary functions
N08	Corrections/compensations
N09	Technological functions
N10	I/O configuration
N11	Standard machine
A12	NC language, ISO dialect
Channel-specific machine data	
C01	Configuration
C02	Memory configuration
C03	Initial states
C04	Auxiliary functions
C05	Velocities
C06	Monitoring/limiting functions
C07	Transformations
C08	Corrections/compensations
C09	Technological functions
C10	Standard machine
C11	NC language, ISO dialect
Axis-specific machine data	
A01	Configuration (including memory)
A02	Measuring system
A03	Machine geometry
A04	Velocities / accelerations
A05	Monitoring/limiting functions
A06	Spindle
A07	Controller data
A08	Status data
A09	Corrections/compensations

ID	Data area
A10	Technological functions
A11	Standard machine
A12	NC language, ISO dialect

Default value

The "Default value" field contains the value that is used to preset the machine data. If default values for the channels differ, this is indicated by "/".

System

In the "System" field, the control system is specified for which the data with the correspondingly entered values applies.

The following entries are possible: ·

- Default:

  The entered values apply to all SINUMERIK 802D sl.

- Deviations in the value range are entered in the following lines of the table, sorted according to the control versions listed:

802d-cu3	Customer-specific pro
802d-ng2	Nibbling / grinding plus
802d-ng3	Nibbling / grinding per
802d-tm1	Turning / milling value
802d-tm2	Turning / milling plus
802d-tm3	Turning / milling pro

If this field is empty, the data is valid for all systems.

Dimension

The "Dimension" field contains the number of elements of a data field.

Range of values

The "Minimum value" and "Maximum value" fields contain the lower limit and upper limit, respectively, of the permissible range of the data.

If the "Minimum value" and "Maximum value" fields contain the string " *** ", an explicit range is not defined for this data. In this case, the range is determined by the specified data type.

SINUMERIK data types

The "Data type" field contains the following data types:

Data type	Range of values
BOOLEAN	Machine data bit (1 or 0)
BYTE	Integer values (-128 to 127)
DOUBLE	Real values (± (2.2 * 10-308 to 1.8 * 10+308))
DWORD	Integer values (-2147483648 to +2147483647)
DWORD	Hex values (0 to FFFF FFFF)
STRING	Character string (max. 16 characters) consisting of upper-case letters with digits and underscore
UNSIGNED WORD	Integer values (0 to 65536)
SIGNED WORD	Integer values (-32768 to 32767)
UNSIGNED DWORD	Integer values (0 to 4294967300)
SIGNED DWORD	Integer values (-2147483650 to 2147483649)
WORD	Hex values (0000 to FFFF)
FLOAT DWORD	Real values (± (8.43 x 10^{-37} to "3.37 x 10^{38})
UBYTE	Integer values (0 to 255)
LONG	Integer values (4294967296 to 4294967295)

Attributes

The "Attributes" field contains additional attributes of the data:

Attribute	Meaning
NBUP	No Back UP: The data is not backed up as part of the data backup.
ODLD	Only DownLoaD: The data can only be written to via an INI file, archive, or from the part program.
NDLD	No DownLoaD: The data can only be written to via the HMI user interface.
SFCO	SaFety COnfiguration: Component of the "Safety Integrated" function
SCAL	SCaling ALarm: Scaling data; when changed, alarm 4070 is displayed
LINK	LINK description: The data describes a link cluster, component of the "NCU Link" function
CTEQ	ConTainer EQual: The data must be the same for all axes in an axis container, component of the "Axis container" function
CTDE	ConTainer DEscription: The data describes an axis container, component of the "Axis container" function

1.3 Overview of the data

Machine and setting data (SINUMERIK)

The machine and setting data are divided into the following areas:

Range	Designation
from 200 to 1200	Displaying machine data
from 10000 to 18999	General NC machine data
from 19000 to 19999	Reserved
from 20000 to 28999	Channel-specific machine data
from 29000 to 29999	Reserved
from 30000 to 38999	Axis-specific machine data
from 39000 to 39999	Reserved
from 41000 to 41999	General setting data
from 42000 to 42999	Channel-specific setting data
from 43000 to 43999	Axis-specific setting data
from 51000 to 51299	General configuration machine data
from 51300 to 51999	General cycle machine data
from 52000 to 52299	Channel-specific configuration machine data
from 52300 to 52999	Channel-specific cycle machine data
from 53000 to 53299	Axis-specific configuration machine data
from 53300 to 53999	Axis-specific cycle machine data

Data Identifiers

The identifier specified in the data description is displayed on the HMI user interface. However, if the data is addressed in the parts program, for example, the identifier of the relevant data area must precede the data identifier (designator).

Identifier	Data area
$MM_	Displaying machine data
$MN_/ $SN_ $MNS_/ $SNS_	General machine/setting data
$MC_/ $SC_ $MCS_/ $SCS_	Channel-specific machine/setting data
$MA_/ $SA_ $MAS_/ $SAS_	Axis-specific machine/setting data

Characters	Meanings
$	System variables
M	Machine data (first letter)
S	Setting data (first letter)
M, N, C, A, D	Subarea (second letter)
S	Siemens data (third letter)

Note

Axis-specific data can also be addressed with the axis name as an index. The internal axis identifier (AX1, AX2, AX3, etc.) or the identifier specified in MD10000 $MA_AX_CONF_NAME_TAB can be used as the axis name.

Example: $MA_JOG_VELO[Y1]=2000

The JOG velocity of axis Y1 is 2000 mm/min.

If the content of a machine data is a STRING (e.g., X1) or a hexadecimal value (e.g., H41), the content must be enclosed in single quotation marks (e.g., 'X1' or 'H41').

Example: $MA_FIX_POINT_POS[0,X1]=500.000

The value 500 is assigned to the first fixed point position on axis 1.

Examples:

$MN_AUXFU_GROUP_SPEC[2]='H41'

Output instant in time of the auxiliary functions of the 3rd auxiliary function group.

$MN_AXCONF_MACHAX_NAME_TAB[0]='X1'
String "X1" is assigned as name for the first machine axis.

$MA_REFP_SET_POS[0,X1]=100.00000

A value of 100 mm is assigned to the first reference point of axis X1.

Examples:

Assignment to channel-specific machine data:

```
CHANDATA(1)                              ; Selection of the first channel
$MC_CHAN_NAME='CHAN1'                    ; Name of the first channel
$MC_AXCONF_GEOAX_NAME_TAB[1]='Y'         ; Name of the 2nd geometry axis
                                         ; of the first channel 'Y'
R10=33.75                                ; R10 of the first channel
```

Machine data

2

2.1 Display machine data

Number	Identifier			Display filters	Reference
Unit	Name			Data type	Active
Attributes					
System	Dimension	Default value	Minimum value	Maximum value	Protection

Description:

200	LCD_CONTRAST			-	-
-	Foreground language			BYTE	PowerOn
-					
-	0	7	0	15	0/0

Description: With 802S contrast of the b/w display.

201	LCD_INVERSE			-	-
-	Foreground language			BYTE	PowerOn
-					
-	0	0	0	1	0/0

Description: Not assigned

202	FIRST_LANGUAGE			-	-
-	Foreground language			BYTE	PowerOn
-					
-	0	2	1	2	0/0

Description: Internal assignment

203	DISPLAY_RESOLUTION			-	-
-				BYTE	Immediately
-					
-	0	3	0	5	3/2

Description: This MD is used to define the number of decimal places of the position display, for linear axes in metric systems, in general for rotary axes.
Spindle positions are treated like rotary axis positions.
The position display is displayed with a max. of 10 characters including signs and decimal places. A positive sign is not displayed.
By default 3 digits are displayed after the decimal point.
MD value=3: display resolution = 10-3 [mm] or [degree],
Related to:
MD 10200: INT_INCR_PER_MM bzw. MD 10210: INT_INCR_PER_DEG

204	DISPLAY_RESOLUTION_INCH			-	-
-	Display resolution for inch system of measurement			BYTE	Immediately
-					
-	0	4	0	5	3/2

Description: This MD is used to define the number of decimal places of the position display for linear axes in the inch system of measurement.
The position display is displayed with a max. of 10 characters including signs and decimal places. A positive sign is not displayed.
By default 4 digits are displayed after the decimal point.
MD value=4: display resolution = 10-4 [mm]
For rotary axes and spindle positions the display is maintained as in MD 203.
Related to:
MD 10200: INT_INCR_PER_MM, MD 203: DISPLAY_RESOLUTION

205	DISPLAY_RESOLUTION_SPINDLE			-	-
-	Display resolution for spindle values			BYTE	Immediately
-					
-	0	1	0	5	3/2

Description: This MD is used to define the number of decimal places for spindle speed display.
The values are displayed with a max. of 10 characters including sign and decimal point. A positive sign is not displayed.
By default 1 digit is displayed after the decimal point.
MD value=1: display resolution = 10-1

207	USER_CLASS_READ_TOA			-	-
-	Read tool offsets protection level, general			BYTE	Immediately
-					
-	0	3	0	7	3/3

Description: Protection level of the tool offsets, general

208	USER_CLASS_WRITE_TOA_GEO			-	-
-	Write tool geometry protection level			BYTE	Immediately
-					
-	0	3	0	7	3/3

Description: Protection level for tool offsets (geometry) for writing

209	USER_CLASS_WRITE_TOA_WEAR			-	-
-	Write tool wear data protection level			BYTE	Immediately
-					
-	0	3	0	7	3/3

Description: Protection level of tool offsets (wear) for writing

210	USER_CLASS_WRITE_ZOA			-	-
-	Write settable work offset protection level			BYTE	Immediately
-					
-	0	3	0	7	3/3

Description: Protection level Settable work offset for writing

212	USER_CLASS_WRITE_SEA			-	-
-	Protection level write setting data			BYTE	Immediately
-					
-	0	7	0	7	3/3

Description: Protection level Setting data for writing

213	USER_CLASS_READ_PROGRAM			-	-
-	Read protection level of part program			BYTE	Immediately
-					
-	0	7	0	7	3/3

Description: Read protection level of part program

214	USER_CLASS_WRITE_PROGRAM			-	-
-	Enter part program protection level			BYTE	Immediately
-					
-	0	3	0	7	3/3

Description: Enter part program protection level

215	USER_CLASS_SELECT_PROGRAM			-	-
-	Program selection protection level			BYTE	Immediately
-					
-	0	3	0	7	3/3

Description: Protection level program selection

217	USER_CLASS_WRITE_CYCLES			-	-
-	Write cycles protection level			BYTE	Immediately
-					
-	0	3	0	7	0/0

Description: Not assigned

218	USER_CLASS_WRITE_RPA			-	-
-	Protection level write R variables			BYTE	Immediately
-					
-	0	3	0	7	3/3

Description: Protection level write R variables

219	USER_CLASS_SET_V24			-	-
-	Set RS-232 protection level			BYTE	Immediately
-					
-	0	3	0	7	3/3

Description: Protection level Change parameters for RS-232 interface

221	USER_CLASS_DIR_ACCESS			-	-
-	Directory access protection level			BYTE	Immediately
-					
-	0	3	0	7	3/3

Description: Directory access protection level

222	USER_CLASS_PLC_ACCESS			-	-
-	PLC project protection level			BYTE	Immediately
-					
-	0	3	0	7	2/2

Description: PLC project protection level

223	USER_CLASS_WRITE_PWA			-	-
-	Protected work area protection level			BYTE	Immediately
-					
-	0	7	0	7	3/2

Description: Protected work area protection level

247	V24_PG_PC_BAUD			-	-
-	PG: baud rate (300, 600, 1200, 2400, 4800, 9600, 19200, 38400)			BYTE	Immediately
-					
-	0	7	5	9	3/3

Description: Baudrate for programming tool (9600,19200,38400,57600,115200)

280	V24_PPI_ADDR_PLC			-	-
-	PLC station address			BYTE	PowerOn
-					
-	-	2	0	126	3/3

Description: PLC station address

281	V24_PPI_ADDR_NCK			-	-
-	NCK station address			BYTE	PowerOn
-					
-	-	3	0	126	3/3

Description: NCK station address

289	CTM_SIMULATION_TIME_NEW_POS			-	-
-	Simulation of actual value update rate			BOOLEAN	Immediately
-					
-	0	100	0	4000	4/3

Description: Use this MD to define the time intervals in which the simulation graphic is updated on the current machine tool machining.
Value = 0 means no update

290	CTM_POS_COORDINATE_SYSTEM			-	-
-	Coordinate system position MD290 = 0 X-axis behind the rotation center MD290 = 2 X-axis before the rotation center			BYTE	PO
-					
-	0	2	0	7	3/3

Description: The position of the coordinate system can be changed as follows:

Value	G02 direction of rotation left	Coordinate system	Operations
0	0		no operation no operation
1	1		mirroring Y no operation
2	1		mirroring X no operation
3	0		mirroring X mirroring Y
4	1		rotation 270° mirroring Y
5	0		rotation 270° no operation
6	0		rotation 90° no operation
7	1		rotation 90° mirroring Y

291	CTM_CROSS_AX_DIAMETER_ON			-	-
-	Diameter display active for transv. axes			BYTE	Immediately
-					
-	0	1	0	1	4/3

Description:
```
0:   Input of absolute values as radius value
     Work offsets always in radius
     Tool lengths always in radius
     Tool wear always in radius
1:   Position display in diameter
     Distance to go in diameter
     Absolute paths in diameter
```

292	CTM_G91_DIAMETER_ON			-	-
-	Incremental infeed			BYTE	Immediately
-					
-	0	1	0	1	7/3

Description:
```
0:   Input in radius
1:   Input in diameter
```

305	G_GROUP1			-	-
-	User-oriented G group for position display			BOOLEAN	Immediately
-					
-	0	1	1	1000	7/3

Description:
```
User-oriented G group for position display
```

306	G_GROUP2			-	-
-	User-oriented G group for position display			BOOLEAN	Immediately
-					
-	0	2	1	1000	7/3

Description:
```
User-oriented G group for position display
```

307	G_GROUP3			-	-
-	User-oriented G group for position display			BOOLEAN	Immediately
-					
-	0	8	1	1000	7/3

Description:
```
User-oriented G group for position display
```

308	G_GROUP4			-	-
-	User-oriented G group for position display			BOOLEAN	Immediately
-					
-	0	9	1	1000	7/3

Description:
```
User-oriented G group for position display
```

309	G_GROUP5			-	-
-	User-oriented G group for position display			BOOLEAN	Immediately
-					
-	0	10	1	1000	7/3

Description:
```
User-oriented G group for position display
```

310	FG_GROUP1			-	-
-	User-oriented G group for position display (external language)			BOOLEAN	Immediately
-					
-	0	1	1	1000	7/3

Description: User-oriented G group for position display (ext. language)

311	FG_GROUP2			-	-
-	User-oriented G group for position display (external language)			BOOLEAN	Immediately
-					
-	0	2	1	1000	7/3

Description: User-oriented G group for position display (ext. language)

312	FG_GROUP3			-	-
-	User-oriented G group for position display (external language)			BOOLEAN	Immediately
-					
-	0	8	1	1000	7/3

Description: User-oriented G group for position display (ext. language)

313	FG_GROUP4			-	-
-	User-oriented G group for position display (external language)			BOOLEAN	Immediately
-					
-	0	9	1	1000	7/3

Description: User-oriented G group for position display (ext. language)

314	FG_GROUP5			-	-
-	User-oriented G group for position display (external language)			BOOLEAN	Immediately
-					
-	0	19	1	1000	7/3

Description: User-oriented G group for position display (ext. language)

330	CMM_POS_COORDINATE_SYSTEM			-	-
-	Coordinate position of the machine axis			BYTE	Immediately
-					
-	0	0	0	7	7/3

Description: Coordinate position of the machine

331	CONTOUR_MASK			-	-
-	Enable 802 contour definition programming			BYTE	Immediately
-					
-	0	1	0	1	7/3

Description: Enable 802 contour definition programming

332	TOOL_LIST_PLACE_NO			-	-
-	Enable the location number in the tool list			BOOLEAN	Immediately
-					
-	0	0	0	1	3/3

Description: Enable the location number in the tool list

343	V24_PPI_ADDR_MMC			-	-
-	.			BOOLEAN	PowerOn
-					
-	0	4	0	126	3/3

Description: HMI station address

344	V24_PPI_MODEM_ACTIVE			-	-
-	.			BYTE	Immediately
-					
-	0	0	0	1	3/3

Description: Enable modem function

345	V24_PPI_MODEM_BAUD			-	-
-	Baud rate for modem connection			BYTE	Immediately
-					
-	0	7	5	9	3/3

Description: Baud rate for modem connection

346	V24_PPI_MODEM_PARITY			-	-
-	Parity for modem connection			BYTE	Immediately
-					
-	0	0	0	2	3/3

Description: Parity for modem connection

356	HMI_COLE_TITLE_FOCUS_FOR			-	-
-	Color setting Title line Focus window Foreground			BYTE	Immediately
-					
-	-	15	0	15	2/3

Description: Color setting Title line Focus window Foreground

357	HMI_COLE_TITLE_FOCUS_BACK			-	-
-	Color setting Title line Focus window Background			BYTE	Immediately
-					
-	-	2	0	15	2/3

Description: Color setting Title line Focus window Background

360	SPINDEL_LOAD_DISPLE1			-	-
-	Switch on spindle 1 utilization display			BOOLEAN	Immediately
-					
-	-	0	0	1	3/3

Description: Switch on spindle 1 utilization display

361	USER_MEAS_TOOL_CHANGE			-	-
-	Input enable for T/D no. in tool measuring window			BYTE	Immediately
-					
-	-	0	0	1	3/3

Description: 0: Input of T/D no. disabled
1: Input of T/D no. enabled

362	SPINDLE_LOAD_DISPLE2			-	-
-	Switch on spindle 2 utilization display			BOOLEAN	Immediately
-					
-	-	1	0	1	3/3

Description: Switch on spindle 2 utilization display

363	SPINDLE_LOAD_BAR_LIM2			-	-
-	Utilization display spindle limit value 2			BOOLEAN	Immediately
-					
-	-	100	0	9999999	2/2

Description: Utilization display spindle limit value 2

364	SPINDLE_LOAD_BAR_LIM3			-	-
-	Utilization display spindle limit value 3			BOOLEAN	Immediately
-					
-	-	100	0	9999999	2/2

Description: Utilization display spindle limit value 3

365	SPINDEL_LOAD_BAR_MAX			-	-
-	Utilization display spindle maximum			BOOLEAN	Immediately
-					
-	-	120	0	120	2/2

Description: Utilization display spindle maximum

366	SPINDEL_LOAD_BAR_COL1			-	-
-	Color utilization display spindle area 1			BYTE	Immediately
-					
-	-	10	0	15	3/3

Description: Color utilization display spindle area 1

367	SPINDLE_LOAD_BAR_COL2			-	-
-	Color utilization display spindle area 2			BYTE	Immediately
-					
-	-	9	0	15	3/3

Description: Color utilization display spindle area 2

368	SPINDLE_LOAD_BAR_COL3			-	-
-	Color utilization display area 3			BYTE	Immediately
-					
-	-	9	0	15	3/3

Description: Color utilization display spindle area 3

369	PROBE_MODE			-	-
-	Type of measuring system: 1: probe, 2: opt. measuring procedure			BOOLEAN	Immediately
-					
-	-	1	0	2	3/3

Description: Type of measuring system: 1: probe, 2: opt. measuring procedure

370	TOOL_REF_PROBE_AXIS1			-	-
-	Absolute position probe X			DOUBLE	Immediately
-					
-	-	0	-999999.999	999999.999	2/2

Description: Absolute position probe X

371	TOOL_REF_PROBE_AXIS2			-	-
-	Absolute position probe Y			DOUBLE	Immediately
-					
-	-	0	-999999.999	999999.999	2/2

Description: Absolute position probe Y

372	TOOL_REF_PROBE_AXIS3			-	-
-	Absolute position probe 3			DOUBLE	Immediately
-					
-	-	9	-999999.999	999999.999	2/2

Description: Absolute position probe Z

373	MEAS_SAVE_POS_LENGTH2			-	-
-	Switch on Measure tool SK "Save Pos" for all values			BYTE	Immediately
-					
-	-	0	0	1	2/2

Description: Controls softkey 'Save Pos' for the function 'Measure tool manually':
0: SK 'Save Pos' is only active when measuring length 1
1: SK 'Save Pos' is active in general

374	TOOL_WEAR_LIMIT_VALUE			-	-
-	Limit value wear control on input			DOUBLE	Immediately
-					
-	-	9.999	0	9.999	2/2

Description: Limit value wear control on input

375	USER_CLASS_READ_CUSS_DIR			-	-
-	Read user cycles protection level			BYTE	Immediately
-					
-	0	7	0	7	0/0

Description: Protection level User cycles for reading

376	USER_CLASS_WRITE_CUS_DIR			-	-
-	Write user cycles protection level			BYTE	Immediately
-					
-	0	2	0	7	3/3

Description: Protection level User cycles for writing

377	USER_CLASS_WRITE_TO_MON_DAT			-	-
-	Tool monitoring protection level			BYTE	Immediately
-					
-	0	3	0	7	3/2

Description: Tool monitoring protection level

378	USER_CLASS_LADDER_VIEW			-	-
-	Select User Ladder View protection level			BYTE	Immediately
-					
-	0	2	0	7	2/2

Description: Select User Ladder View protection level

379	SPINDLE_DISP_MODE			-	-
-	0: Standard Mode; spindle speed display 1: Constant cutting speed			BYTE	Immediately
-					
-	0	0	0	2	3/3

Description: 0: Standard Mode; spindle speed display
1: Constant cutting speed display when G96 is set
2: Mixed display

383	V24_PPI_ADDR_DRV1			-	-
-	Station address Drives			BYTE	PowerOn
-					
-	0	5	0	126	3/3

Description: Station address Drives

384	WHEEL_TYPE_MASK			-	-
-	Foreground language			DWORD	Immediately
-					
-	0	0xFFFF	1	0xFFFF	2/2

Description: Configuration of selectable wheel types
Bit0: free contour
Bit1: straight without relief cut
Bit2: straight with relief cut
Bit3: bevelled left
Bit4: bevelled right
Bit5: straight profile roller table
Bit6: straight profile roller head

385	DRESSER_FUNCTION_MASK			-	-
-	--			DWORD	Immediately
-					
-	-	7	1	7	2/2

Description: Defines the number of dressers. Bit0 = dresser1; bit1 = dresser2; bit3 = dresser3

386	USER_CLASS_WRITE_CMA_DIR			-	-
-	--			BYTE	Immediately
-					
-	-	7	1	7	2/2

Description: Defines the access level for the CMA directory in the NCK

387	GRAPHIC_MIN_X			-	-
mm	--			DOUBLE	Immediately
-					
-	-	-999.999000	-99999999.999	99999999.999	7/2

Description: MM Plus

388	GRAPHIC_MAX_X			-	-
mm	--			DOUBLE	Immediately
-					
-	-	999.999000	-99999999.999	99999999.999	7/2

Description: MM Plus

389	GRAPHIC_MIN_Y			-	-
mm	--			DOUBLE	Immediately
-					
-	-	-999.999000	-99999999.999	99999999.999	7/2

Description: MM Plus

390	GRAPHIC_MAX_Y			-	-
mm	--			DOUBLE	Immediately
-					
-	-	999.999000	-99999999.999	99999999.999	7/2

Description: MM Plus

391	DISPLAY_MODE_INDEXING_AXIS			-	-
-	--			DWORD	Immediately
-					
-	-	0	0	1	7/2

Description: Defines the display format of an indexing axis. 0 = indexing position; 1 = type-spec. actual value

392	USER_CLASS_WRITE_LOC_NO			-	-
-	--			BYTE	Immediately
-					
-	-	3	0	7	3/2

Description: Defines the access authorization for writing the location number in the tool list

393	DISPLAY_TOLI_H_NO			-	-
-	--			BOOLEAN	Immediately
-					
-	-	0	0	1	3/3

Description: Controls the display of the H number in the tool list

394	DISPLAY_TOLI_SISTER_TOOL			-	-
-	--			BOOLEAN	Immediately
-					
-	-	0	0	1	3/3

Description: Controls the display of the replacement tool in the tool list

395	COL_OVERSIZE_TYPE_CHECKBOX			-	-
-	--			BOOLEAN	Immediately
-					
-	-	1	0	1	3/2

Description: Check box in tool list

398	CUTEDGE_PARAM_CHECK_ON			-	-
-	--			BOOLEAN	Immediately
-					
-	-	0	0	1	3/3

Description: -

399	SUBPRESS_STOPPER_ALARM			-	-
-	--			BOOLEAN	Immediately
-					
-	-	0	0	1	3/2

Description: MM Plus

400	USER_MANUAL_MA_TOOL_CHANGE			-	-
-	--			BOOLEAN	Immediately
-					
-	-	0	0	1	3/2

Description: MM Plus

401	USER_MANUAL_MA_SHOW_PAGE_NO			-	-
-	--			BOOLEAN	Immediately
-					
-	-	1	0	1	3/2

Description: MM Plus

1088	ASSIGN_SPIN_TO_WP_SPIN1			-	-
-	--			DWORD	Immediately
-					
-	-	1	0	3	3/3

Description: Assignment of a spindle number to the 1st tool spindle in the display of the machine main screen

1089	ASSIGN_SPIN_TO_WP_SPIN2			-	-
-	--			DWORD	Immediately
-					
-	-	2	0	3	3/3

Description: Assignment of a spindle number to the 2nd tool spindle in the display of the machine main screen

1090	OSCILATE_FUNCTION_MASK			-	-
-	--			DWORD	Immediately
-					
-	-	4095	0	0xFFFF	2/2

Description: Mask for oscillator function
Bit0: no function
Bit1: infeed X axis no oscillation
Bit2: infeed Y axis no oscillation
Bit3: infeed Z axis no oscillation
Bit4: infeed X axis oscillation Y/Z axes
Bit5: infeed Y axis oscillation X axis
Bit6: infeed Z axis oscillation X axis
Bit7: infeed X axis oscillation Y axis
Bit8: infeed Y axis oscillation X/Z axis
Bit9: infeed Z axis oscillation Y axis
Bit10: infeed X axis oscillation Z axis
Bit11: infeed Y axis oscillation Z axis
Bit12: infeed Z axis oscillation X/Y axis

1091	SINAMICS_IBN_TIMEOUT_VALUE			-	-
-	--			DWORD	Immediately
-					
-	-	230	0	1000	2/2

Description: Defines the wait time on read-in of the parameters for all SINAMICS devices during commissioning

1092	MAX_SPINDEL_SPEED_MANUAL_MA			-	-
-	--			DOUBLE	Immediately
-					
-	-	99999.00000	0	99999.00000	3/3

Description: Input limit spindle speed MM+

1093	MAX_SPEED_G96_MANUAL_MA			-	-
-	--			DOUBLE	Immediately
-					
-	-	99999.00000	0	99999.00000	3/3

Description: Input limit cutting meter MM+

1094	MAX_SPEED_G94_MANUAL_MA			-	-
-	--			DOUBLE	Immediately
-					
-	-	99999.00000	0	99999.00000	3/3

Description: Input limit time feed MM+

1095	MAX_SPEED_G95_MANUAL_MA			-	-
-	--			DOUBLE	Immediately
-					
-	-	99999.00000	0	99999.00000	3/3

Description: Input limit rotation feed MM+

1096	MAX_NUM_CYCLE_MANUAL_MA			-	-
-	--			DWORD	Immediately
-					
-	-	9	1	9	3/3

Description: Number of managed masks per cycle in manual mode of MM+

1097	MAX_NUM_CUTT_EDGE_MANUAL_MA			-	-
-	--			DWORD	Immediately
-					
-	-	9	1	9	3/3

Description: Number of managed cutting edges in MM+

1098	INVERT_SPIN_ICON_MANUAL_MA			-	-
-	--			BOOLEAN	Immediately
-					
-	-	1	0	1	3/2

Description: The direction of spindle rotation is displayed inverted.

1099	USE_FIXPOINT_MANUAL_MA			-	-
-	--			BOOLEAN	Immediately
-					
-	-	1	0	1	3/3

Description: Tool change increment MM+:
The selection field for fixed-point approach is selected or deselected by default

1100	MEAS_SPIN_ACTIV_MANUAL_MA			-	-
-	--			BOOLEAN	Immediately
-					
-	-	1	0	1	3/2

Description: If the value is 1, the tool offset data can be measured in the X direction with rotating spindle.

1101	USER_TOOL_CHG_MANUAL_MA			-	-
-	--			BOOLEAN	Immediately
-					
-	-	1	0	1	3/3

Description: Tool change increment MM+:
If the value is 1, input of a tool or cutting edge number is permissible.

1102	CYC_TOOLNO_EDTMOD_MANUAL_MA			-	-
-	--			BOOLEAN	Immediately
-					
-	-	1	0	1	3/3

Description: Input mode T no. in the cycle masks MM+:
0: No T no. input by the operator. T no. is automatically created from SGUD.
>=1: T no. input by the operator

1103	TAPPINGCYCLE_MODE_MANUAL_MA			-	-
-	--			BOOLEAN	Immediately
-					
-	-	1	0	1	3/3

Description: Preselection of cycle type on tapping MM+:

	With compensating chuck	without compensating chuck
0	CYCLE840	CYCLE840
1	CYCLE840	CYCLE84
>=2	CYCLE840	not possible

1104	TOOL_CHG_MANUALMODE_MA			-	-
-	--			BOOLEAN	Immediately
-					
-	-	1	0	1	3/3

Description: Tool change enable in the JOG function of the MM+

1105	STARTUP_WITH_MMP			-	-
-	--			BOOLEAN	PowerOn
-					
-	-	1	0	1	3/3

Description: Automatic start of MM+ after power ON

1106	SOFTKEY_CENTRE_ADJ			-	-
-	--			BOOLEAN	PowerOn
-					
-	-	1	0	1	3/3

Description: Text on the softkeys is justified

1107	AX_LOAD_DISPL			-	-
-	--			BOOLEAN	Immediately
-					
-	-	1	0	1	3/3

Description: Activate axis utilization display

2.2 General machine data

2.2.1 System settings

10000	AXCONF_MACHAX_NAME_TAB			N01, N11	K2,F1,G2,F2,K5, M1
-	Machine axis name			STRING	PowerOn
-					
802d-cu3	6	X1,Y1,Z1,SP,A1,PLC X1...	-	-	2/2
802d-ng2	6	X1,Z1,C1,A1,B1,PLC X1...	-	-	2/2
802d-ng3	6	X1,Z1,C1,A1,B1,PLC X1...	-	-	2/2
802d-tm1	4	X1,Y1,Z1,SP	-	-	2/2
802d-tm2	6	X1,Y1,Z1,SP,A1,PLC X1...	-	-	2/2
802d-tm3	6	X1,Y1,Z1,SP,A1,PLC X1...	-	-	2/2

Description:

The name of the machine axis is entered in this MD.
The use of an axis identifier consisting of a valid address letter (A, B, C, Q, U, V, W, X, Y, Z), followed by an optional numerical extension (1-99) should be used with priority.
- The selected machine axis identifier must have a different name from the geometry axes (X, Y, Z) and further channel axes (MD 20080: AXCONF_CHANAX_NAME_TAB) - as long as a transformation (e.g.: TRANSMITT) is scheduled.
Note: Transformations are not available with SINUMERIK 802D in the SW version P1.
- A "free" entered machine axis identifier (axis name) must not have the name,
address, key word or predefined identifier that has already been used in the control or has been reserved for some other functionality
(e.g.: SPOS, DIAMON,...).
Note: Not all the functionalities of the control system
SINUMERIK have been documented under the 802D. A free axis name can, therefore, be used only conditionally.
Related to:
MD20060 $MC_AXCONF_GEOAX_NAME_TAB (geometry axis name)
MD20080 $MC_AXCONF_CHANAX_NAME_TAB (channel axis name)

10010	ASSIGN_CHAN_TO_MODE_GROUP			N01, N02, N11	K1,K5
-	Channel valid in mode group			DWORD	PowerOn
-					
-	1	1,0,0,0,0,0,0,0,0,0,0,0,0,0,0,0	0	1	0/0

Description:

This MD assigns the channel to a mode group
Entry value 1 => Assigned to 1st mode group
Entry value 2 => Assigned to 2nd mode group
etc.
From software version 4, it is permissible not to assign a mode group number to individual channels.
Channel gaps are allowed, in order to favor uniform configuration in similar types of machines. In this case, the number 0 is assigned to the channel instead of assigning a mode group number equal to or greater than 1. The channel is not activated, however it is handled like an active channel when counting the channels.
E.g.

```
ASSIGN_CHAN_TO_MODE_GROUP[0] = 1
ASSIGN_CHAN_TO_MODE_GROUP[1] = 1
ASSIGN_CHAN_TO_MODE_GROUP[2] = 0   ; gap
ASSIGN_CHAN_TO_MODE_GROUP[3] = 1
```

Application example:
Select desired channel via HMI and enter with MD10010
$MN_ASSIGN_CHAN_TO_MODE_GROUP = 1.
Note:
This MD must still be entered even when only one mode group is present.

10050	SYSCLOCK_CYCLE_TIME			N01, N05, N11, -	G3,G2,R1
s	System clock cycle			DOUBLE	PowerOn
SFCO					
-	-	0.0015	0.0005	0.032	0/0

Description:

Basic cycle time of the system software
The cycle times settings of cyclical tasks (position controller/IPO) are multiples of this basic cycle. Apart from special applications in which POSCTRL_SYSCLOCK_TIME_RATIO is set greater than 1, the basic cycle corresponds to the position controller cycle.
For PROFIBUS/PROFINET:
In the case of systems with a PROFIBUS DP connection, this MD corresponds to the PROFIBUS DP cycle time. This time is read from the configuration file (SDB-Type-2000) during startup and written to the MD.
This MD can only be changed via the configuration file.
Note:

Reducing this MD can result in an automatic correction of POSCTRL_CYCLE_DELAY that cannot be undone by a subsequent increase!

Details:

The basic cycle is incremented in multiples (SYSCLOCK_SAMPL_TIME_RATIO) of units of the measured value sampling cycle. During system startup, the entered value is automatically rounded up to a multiple of this incrementation.

Note:

Discrete timer division ratios can give rise to the entered value producing a value that is not an integer after a Power OFF/ON.

For example:

Input = 0.005s
after Power OFF/ON =0.00499840

or

Input = 0.006s
after Power OFF/ON =0.0060032

10059	PROFIBUS_ALARM_MARKER			N05	G3
-	PROFIBUS/PROFINET alarm flag (internal only)			BYTE	PowerOn
NBUP, NDLD					
-	-	0	-	-	0/0

Description: PROFIBUS/PROFINET alarm flag:
In this machine data, alarm requests for the PROFIBUS/PROFINET layer are stored beyond a reboot.
If conflicts arise between machine data 10050, 10060, 10070 and the data in the SDB on startup, the machine data are matched according to SDB, and an alarm is output on the next start up. These alarm requests are stored here.
Related to:

MD10050 $MN_SYSCLOCK_CYCLE_TIME,
MD10080 $MN_SYSCLOCK_SAMPL_TIME_RATIO

10060	POSCTRL_SYSCLOCK_TIME_RATIO			N01, N05	G3
-	Factor for position control cycle			DWORD	PowerOn
SFCO					
-	-	2	1	31	0/0

Description: The position-control cycle is stated as a multiple of the time units of the system basic cycle SYSCLOCK_CYCLE_TIME.
The regular setting is 1. The position-control cycle then corresponds to the system basic cycle SYSCLOCK_CYCLE_TIME.
Setting values > 1 costs computing time for the operating system to calculate the additional timer interrupts, and should therefore only be used in those cases in which there is a task in the system that is to run faster than the position-control cycle.
For PROFIBUS/PROFINET:
In the case of systems with a PROFIBUS DP connection, this MD represents the ratio between the PROFIBUS DP cycle and the position controller cycle.

10061	POSCTRL_CYCLE_TIME			N01, N05	G3
-	Position control cycle			DOUBLE	PowerOn
-					
-	-	0.0	-	-	0/0

Description: Position controller cycle time:
Display of the position controller cycle time (not modifiable !).
It is compiled internally from the machine data SYSCLOCK_CYCLE_TIME and POSCTRL_SYSCLOCK_TIME_RATIO.

10062	POSCTRL_CYCLE_DELAY			N01, N05	G3
s	Position control cycle offset			DOUBLE	PowerOn
-					
-	-	0.0	0.000	0.008	0/0

Description: For PROFIdrive only:
Only relevant to operation with PROFIBUS drives.
Position controller cycle offset in relation to the PROFIBUS DP cycle.
Offsets that exceed the set DP cycle or are smaller than the maximum Tdx, are automatically corrected to a substitute value half the size of the DP cycle.
MD10062 $MN_POSCTRL_CYCLE_DELAY > 0:Default for position controller offset
MD10062 $MN_POSCTRL_CYCLE_DELAY = 0:Automatic determination of the position controller offset with max. Tdx from STEP7 project
Tdx_max is determined through all equidistant buses.
The actually active offset value is displayed in MD 10063[1].
Note:
MD10062 $MN_POSCTRL_CYCLE_DELAY > 0 can reduce MD10050 $MN_SYSCLOCK_CYCLE_TIME to the automatic correction of this MD that cannot be undone by a subsequent increase.
Recommendation:
In this case set the original value or default value once again.

10063	POSCTRL_CYCLE_DIAGNOSIS			EXP, N01, N05	-
s	Active timing			DOUBLE	PowerOn
-					
-	3	0.0,0.0,0.0	-	-	0/RO

Description: Diagnostic data related to the PROFIBUS/PROFINET cycle.
[0]: Latest date at which the actual values must be available (Tdx)
[1]: Actually active position controller cycle offset (Tm)
[2]: Latest date at which the setpoints were output by the position controller
Diagnostic data are initialized with ZERO with each NCK power up

10070	IPO_SYSCLOCK_TIME_RATIO			N01, N05, N11, -	G3,R1
-	Factor for interpolation cycle			DWORD	PowerOn
SFCO					
802d-cu3	-	6	1	100	0/0
802d-ng2	-	6	1	100	0/0
802d-ng3	-	6	1	100	0/0
802d-tm1	-	8	1	100	0/0
802d-tm2	-	6	1	100	0/0
802d-tm3	-	6	1	100	0/0

Description: The interpolator cycle is stated as a multiple of the time units of the system basic cycle SYSCLOCK_CYCLE_TIME.
Only integer multiples of the position control cycle can be set (set in POSCTRL_SYSCLOCK_TIME_RATIO). Values that are not an integer multiple of the position control cycle are automatically increased to the next integer multiple of the position control cycle before they become active (on next power up).
This is accompanied by alarm 4102 "IPO cycle increased to [ ] ms".

10071	IPO_CYCLE_TIME			N01, N05, N11, -	G3
-	Interpolator cycle			DOUBLE	PowerOn
-					
-	-	0.0	-	-	0/0

Description: Interpolation time
Display of the interpolator cycle time (not modifiable !).
It is compiled internally from the machine data SYSCLOCK_CYCLE_TIME and IPO_SYSCLOCK_TIME_RATIO.

10073	COM_IPO_STRATEGY			EXP	-
-	Strategy for activation of communication.			DWORD	PowerOn
-					
-	-	0x0F	1	0x7F	0/0

Description: The call frequency of the communication task can be controlled by MD10072 $MN_COM_IPO_TIME_RATIO.
The communication tasks are activated cyclically. That has some advantages and disadvantages:
Advantages:
- The communication behavior of the NCK is deterministic in relation to the communication task.

Disadvantages:
- The communication task can lead to level overflows.
- In an unloaded NCK system, the speed of communication is determined by MD10072 $MN_COM_IPO_TIME_RATIO. As this machine data is power ON, it cannot adapt to the current NCK operating mode. A typical problem is that uploading a part program can take a very long time on an unloaded NCK. In this case, the bottleneck is the communication task that only progresses in the relation defined by machine data COM_IPO_TIME_RATIO.

This machine data has been introduced to eliminate the above-mentioned disadvantages. It makes the times at which the communication software is activated controllable. The machine data is bit-coded. The bits have the following meanings:
Bit 0:
The communication software is calculated cyclically
Bit 1:
The level time overflow monitoring is switched off for the cyclical communication task. This bit is only practical if bit zero is set. The task is implemented in a non-cyclical level that has a higher priority than the preparation/communication level. The communication task makes a delay of the time defined in COM_IPO_TIME_RATIO after each cycle.
Bit 2:
The communication software is calculated at the start of the task which the domain services accept.
Bit 3:
The communication software is calculated at the end of the task which the domain services accept.
Bit 4:
The communication software is calculated at the start of the task which the domain services accept if a PDU upload has arrived. This bit is only useful if bit 2 is set.

Bit 5:

The communication software is calculated at the end of the task which the domain services accept if a PDU upload has arrived. This bit is only useful if bit 3 is set.

This machine data is only active in systems containing the Softbus communication software. This is in P6 the 840Di with MCI2 software and the solution line systems for P7.

The default value is 0x0F. This means that the COS is calculated prior to and after communiction in order to minimize latencies.

10074	PLC_IPO_TIME_RATIO			N01, N05	-
-	Factor of PLC task for the main run.			DWORD	PowerOn
-					
-	-	1	1	50	2/2

Description: Division ratio between IPO and PLC tasks.

A value of 2 means, e. g. that the PLC task is only processed in every second IPO cycle. The PLC cycle time is then 2 IPO cycle times. This makes more runtime available for the other tasks.

The PLC run time must not exceed this PLC cycle time, otherwise an alarm with PLC STOP is triggered.

10075	PLC_CYCLE_TIME			N01, N05	-
-	PLC cycle time			DOUBLE	PowerOn
-					
-	-	0.0	-	-	1/RO

Description: Display of the PLC cycle time (not modifiable !)

It is compiled internally from MD10071 $MN_IPO_CYCLE_TIME and MD10074 $MN_PLC_IPO_TIME_RATIO.

10080	SYSCLOCK_SAMPL_TIME_RATIO			EXP, N01	G3
-	Division ratio for actual value recording cycle time			DWORD	PowerOn
-					
-	-	1	1	31	-1/0

Description: For SIMODRIVE611D only:

SYSCLOCK_SAMPL_TIME_RATIO sets the division factor of a cycle divider that is arranged as hardware between the cycle of the measured value sampling and the interrupt controller.

- The sampler cycle (upstream of the divider) taps the actual value inputs and triggers the digital analog converter.
- The output of the divider generates a timer interrupt as the basic cycle of the

operating system (SYSCLOCK_CYCLE_TIME).

A value greater than 1 may only be entered in SYSCLOCK_SAMPL_TIME_RATIO in exceptional cases:

Values > 1 increase the size of the increments in which the basic cycle can be set. (see SYSCLOCK_CYCLE_TIME)

Special cases:

1. When using the conventional drive interface (analog speed interface), the divider is set according to the following criteria:

   It is advantageous for the control to keep the dead time between reading in the current axis actual positions and outputting the corresponding set-point values as short as possible. The delay time of the position controller output can be set in fractions of the position control cycle time by setting SYSCLOCK_SAMPL_TIME_RATIO to values > 1. The difficulty with this is reliably determining the time after which the position controller delivers valid results. Multiple triggering of the input/output hardware during one position controller cycle could also be achieved by setting POSCTRL_SYSCLOCK_TIME_RATIO to values > 1. However, the disdvantage with this is the unnecessarily high rate of generating timer interrupts for the operating system. This procedure is not recommended.

2. When using the digital drive controller the division factor is set automatically. The sample cycle time is then set as the 1, 2, 3, ... 8-fold of 125µs.

10088	REBOOT_DELAY_TIME			EXP	K3
s	Reboot delay			DOUBLE	Immediately
-					
-	-	0.2	0.0	1.0	2/2

Description: The reboot following PI "_N_IBN_SS" is delayed by the time MD10088 $MN_REBOOT_DELAY_TIME.

The suppressable NOREADY alarm 2900 is triggered immediately by PI "_N_IBN_SS".

If MD10088 $MN_REBOOT_DELAY_TIME falls below the MD36620 $MA_SERVO_DISABLE_DELAY_TIME value of an axis, the axis is decelerated during MD10088 $MN_REBOOT_DELAY_TIME. The servo enable is then disabled. That is, the full MD36620 $MA_SERVO_DISABLE_DELAY_TIME is NOT waited.

Alarm 2900 does not become active if MD10088 $MN_REBOOT_DELAY_TIME = 0.0, and there is no reboot delay.

The NCK waits beyond the stated delay time until the PI has been able to be acknowledged to the HMI. The total delay time may be as much as 2 s.

10100	PLC_CYCLIC_TIMEOUT			EXP, N01, N06	P3
s	Maximum PLC cycle time			DOUBLE	PowerOn
-					
-	-	0.1	-	-	0/0

Description: Cyclical PLC monitoring time.

This machine data specifies the maximum monitoring time after which the PLC must have incremented its sign of life. Incrementing takes place within the interpolation cycles.

10110	PLC_CYCLE_TIME_AVERAGE			N01, N07	B1
s	Average PLC acknowledgement time			DOUBLE	PowerOn
-					
802d-cu3	-	0.018	-	-	0/0
802d-ng2	-	0.018	-	-	0/0
802d-ng3	-	0.018	-	-	0/0
802d-tm1	-	0.024	-	-	0/0
802d-tm2	-	0.018	-	-	0/0
802d-tm3	-	0.018	-	-	0/0

Description: Time information for the CNC about the OB1 cycle time. During this cycle time, it is guaranteed that the auxiliary functions will be acknowledged.
By means of the MD, the status transitions:
"channel operates/ channel in RESET/ channel failure --> channel interrupted" can be delayed for the PLC in case of a RESET. With the output "channel interrupted", the NCK waits at least the time indicated in the MD + 1 IPO cycle.
With the time indication, the path feedrate during path control operation in case of an auxiliary function output during motion is controlled in a way to ensure that the minimum travel time corresponds to the time information. This ensures a uniform velocity behavior which is not disturbed by waiting for the PLC acknowledgement. The internal incrementation is performed in the interpolation cycle.
For the auxiliary function output in the continuous-path mode, the MD is also relevant for the FM357 and 802/802s systems. With SW 5.1 and higher, the other systems are parameterized directly via the PLC.

10120	PLC_RUNNINGUP_TIMEOUT			EXP, N01, N06	H2
s	Monitoring time for PLC power up			DOUBLE	PowerOn
-					
-	-	5.0	-	-	0/0

Description: Power up PLC monitoring time
This machine data specifies the maximum monitoring time within which the PLC must report its first sign of life to the NCK. During the power up routine, the monitoring function has the task of verifying that the PLC has properly assumed cyclic operation. If the PLC does not issue a message within this time, the NC issues an alarm message when it powers up; NC-READY is not set. The incrementing takes place within the interpolation cycles.

10130	TIME_LIMIT_NETTO_COM_TASK			EXP, N01	OEM
s	Runtime limitation of communication to HMI			DOUBLE	PowerOn
-					
-	-	0.005	.001	0.100	0/0

Description: Net runtime limit of the communication sub-task
Preprocessing and the communications task share the time that is not used up by the cyclical tasks. Of this remaining time, communication uses the set time at the expense of preprocessing time; in other words, the net block cycle time is increased by the set value. This machine data serves the purpose of optimizing the block cycle time with the function "Reloading part programs block-by-block".

10131	SUPPRESS_SCREEN_REFRESH			EXP	A2
-	Screen refresh response under overload			BYTE	PowerOn
-					
-	-	2	0	2	1/1

Description: There are part programs in which the main run (HL) has to wait until the pre-processing (VL) makes new blocks available.
The pre-processing and display update compete for NC computing time. The MD defines how the NC is to respond when the pre-processing is too slow.
0: When the VL of a channel is too slow, the updating of the display is suppressed in all channels.
1: When the VL of a channel is too slow, the updating of the display is suppressed only in the time-critical channels in order to gain time for the pre-processing.
2: The updating of the display is never suppressed.

10134	MM_NUM_MMC_UNITS			EXP, N01, N02	B3
-	Possible number of simultaneous HMI communication partners			DWORD	PowerOn
-					
-	-	6	1	10	0/0

Description: Possible number of simultaneous HMI communication partners with which the NCU can exchange data.
This value affects the number of communication orders that the NCK can manage. The higher the value, the more HMIs that can be simultaneously connected to the NCK without leading to communication problems.
DRAM is made available for this function in the NCU corresponding to the input in the machine data. The inputs for changing the memory areas have to be taken into account.
The unit of MD10134 $MN_MM_NUM_MMC_UNITS is a "resource unit".
A standard OP030 needs 1 resource unit, an HMI100/103 needs 2. OEM variants may need more or less resources.

- If the value is set lower than would be needed for the number of connected HMIs, this is not inevitably problematical. Actions may not function sporadically during multiple, simultaneous, communication-intensive operations (e.g. loading a program): Alarm 5000 is displayed. The operation then has to be repeated.
- If the value is set higher, more dynamic memory is occupied than necessary. The value should be reduced appropriately if the memory is required for other purposes.

References: /FB/, S7, "Memory Configuration"

10136	DISPLAY_MODE_POSITION			N01	-
-	Display mode for actual position in the WCS			DWORD	Reset
-					
-	-	0	0	1	1/1

Description: Defines how the position and the distance to go are displayed in the WCS.
0: Display as in software version 5 and earlier
1: At end of block, the actual value display is in principle the same as the programmed end point, irrespective of where the machine actually is (e.g. as a result of the tool radius compensation). The distance to go is the same as the actual distance to be traversed. This means that the displayed actual postion has to be the same as the displayed end position minus the distance to go, irrespective of the actual machine position. If the block end points are changed by chamfers, radii, contour definitions, splines or SAR in comparison to the NC programm, then these changes are reflected in the display as if thay had been programmed. This does not apply to changes resulting from tool radius compensation or smoothing.

10160	PREP_COM_TASK_CYCLE_RATIO			EXP, N01	ECO
-	Factor for communication with HMI			DWORD	PowerOn
-					
-	-	3	1	50	0/0

Description: This machine data specifies the division ratio used for activating the communication task in the non-cyclic time level. This allows the time share of preparation in the non-cyclic time level to be increased, which reduces block cycle times. External communication (file transfer) is slowed down in particular during program execution (block reload).

10161	COM_CONFIGURATION			EXP, N01	-
-	Configuration of communication			DWORD	PowerOn
-					
-	8	5, 5,18, 1,16, 8,18,18	-	-	0/0

Description: Values 1-3 define the maximum number of PDUs that are accepted in one pass.
Value 0 stands for infinite, i.e. all present jobs are executed immediately.
These three values become active after PowerOn.
1st value: max. number of variable job PDUs executed per pass.
2nd value: max. number of PI job PDUs executed per pass.
3rd value: max. number of domain job PDUs executed per pass.
Values 4-8 define the credit assignment for optimized download.
4th value: number of PDUs that are assigned as credit at the begin of acknowledgement under opt. domain service (here, the file header and therefore the file on NCK are still unknown)
5th value: number of PDUs that will be requested by default under opt. domain service, if there is no explicit memory limit for the file
6th value: min. number of PDUs that are requested with the data request message (so that data request messages are not displayed again and again)
7th value: max. number of PDUs that are requested with the data request message (max. value is 255, as the log cannot handle more than that!)
8th value: max. number of PDUs that may be present in total

10170	PREP_PLCBG_TASK_CYCLE_RATIO			EXP, N01	ECO
-	Factor for communication with SW PLC2xx			DWORD	PowerOn
-					
-	-	1	1	50	0/0

Description: This machine data specifies the division ratio used for activation of the background task of the software PLC2xx in the non-cyclic time level.
As this cycle should be executed as often as possible (once in each PLC cycle), a ratio to the PREP task of 1:1 should be set. The frequency of activation depends on the computing time of the cyclic tasks (SERVO, IPO, COM, PLC) and the settings for the other subtasks (ratio to PREP, net runtime) or the utilization of the non-cyclic tasks PREP, EXCOM, DRIVE.

10171	TIME_LIMIT_NETTO_PLCBG_TASK			EXP, N01	ECO
s	Runtime limitation of communication to SW PLC2xx			DOUBLE	PowerOn
-					
-	-	0.005	.001	0.100	0/0

Description: Net runtime limit of the Soft PLC2xx background subtask
The machine data determines the minimum computing time assigned to the SW PLC2xx
background task, if activated, as a whole (interrupted by the cyclic tasks and Linux)
If the task does not give up control on its own (as there is nothing to do), it will disable both the feed and the other subtasks for this period of time.
If there is only few computing time left, relatively long periods of time may be created this way.

10172	PLCINT_POSCTRL_TIME_RATIO			EXP, N01	ECO
-	Division ratio between servosynch. task of software PLC2xx and servotask			DWORD	PowerOn
-					
-	-	1	1	10	0/0

Description: A cyclic task of software PLC2xx, which is implemented on the servo level of the PLC, is started in a ratio synchronously with the servo task. A ratio of 1 must be set in order to achieve a quick reaction to external events.

10173	TIME_LIMIT_PLCINT_TASK			EXP, N01	ECO
s	Runtime limitation of servosynch. task of software PLC2xx			DOUBLE	PowerOn
-					
-	-	0.00005	0.00001	0.0001	0/0

Description: Runtime limit of the servosynchronous soft PLC2xx interrupt task
This machine data defines the maximum amount of computing time given at any one time to the servosynchronous task of the softeware PLC2xx to execute the PLC user program on the PLC servo interrupt level.

10174	TIME_LIMIT_PLCINT_TASK_DIAG			EXP, N01, N05	-
s	Runtimes of the servosynch. task of software PLC2xx with timeout			DOUBLE	PowerOn
-					
-	3	0.0,0.0,0.0	-	-	0/RO

Description: Diagnostic data of the runtimes of the servosynchronous task of the SW-PLC2xx in the case of a time-out.
[0]: Current runtime that has led to a time-out
[1]: Minimum runtime so far measured
[2]: Maximum runtime so far measured
Diagnostic data are initialized with ZERO at each NCK power up

10185	NCK_PCOS_TIME_RATIO			EXP, N01	-
-	Processing time share NCK			DWORD	PowerOn
-					
-	-	65	10	90	0/0

Description: This machine data defines the maximum proportion of CPU time given to the NCK in a PC-based system. The division specified by the user is implemented as well as possible.
When implementing the specification, the system takes into account limiting values for the absolute proportion of CPU time that must not be over or undershot.
Adaptations are made without generating an alarm.

10192	GEAR_CHANGE_WAIT_TIME			N01	S1
s	Gear stage change waiting time			DOUBLE	PowerOn
-					
-	-	10.0	0.0	1.0e5	1/1

Description: External events which trigger reorganization, wait for the end of a gear stage change. GEAR_CHANGE_WAIT_TIME now determines the waiting time for the gear stage change. Time unit in seconds.
When this time expires without the gear stage change having been terminated, the NCK reacts with an alarm.
Among others, the following events will cause reorganization:
User ASUB
Mode change
Delete distance-to-go
Axis replacement
Activate user data

10200	INT_INCR_PER_MM			N01	G2,K3
-	Calculation resolution for linear positions			DOUBLE	PowerOn
-					
802d-cu3	-	1000.	1.0	1.0e9	2/2
802d-ng2	-	100000.	1.0	1.0e9	2/2
802d-ng3	-	100000.	1.0	1.0e9	2/2
802d-tm1	-	1000.	1.0	1.0e9	2/2
802d-tm2	-	1000.	1.0	1.0e9	2/2
802d-tm3	-	1000.	1.0	1.0e9	2/2

Description: This MD defines the number of internal increments per millimeter.
The accuracy of the input of linear positions is limited to the calculation accuracy by rounding the product of the programmed value and the calculation accuracy to an integer.
In order to keep the executed rounding easily understandable it is useful to use powers of 10 for the calculation accuracy.

10210	INT_INCR_PER_DEG			N01	G2,K3,R2
-	Calculation resolution for angular positions			DOUBLE	PowerOn
-					
802d-cu3	-	1000.0	1.0	1.0e9	2/2
802d-ng2	-	100000.	1.0	1.0e9	2/2
802d-ng3	-	100000.	1.0	1.0e9	2/2
802d-tm1	-	1000.0	1.0	1.0e9	2/2
802d-tm2	-	1000.0	1.0	1.0e9	2/2
802d-tm3	-	1000.0	1.0	1.0e9	2/2

Description: This MD defines the number of internal increments per degree.
The accuracy of the input of angular positions is limited to the calculation accuracy by rounding the product of the programmed value and the calculation accuracy to an integer.
In order to keep the executed rounding easily understandable it is useful to use powers of 10 for the calculation accuracy.

10220	SCALING_USER_DEF_MASK			EXP, N01	G2
-	Activation of scaling factors			DWORD	PowerOn
SCAL					
-	-	0x200	0	0x3FFF	0/0

Description: Bit mask for selecting the base values for the data (e.g. machine and setting data) that have a physical unit, they are interpreted in the default units shown below according to the basic system (metric/inch). If other input/output units are to be selected for individual physical units then these are activated with the scale factors associated with this machine data (entered in MD10230 $MN_SCALING_FACTORS_USER_DEF[n]).
This does not affect the programming of geometry and feed values.

Bit set:
Data of the assigned physical variable (see list) are scaled to the unit defined by MD10230 $MN_SCALING_FACTORS_USER_DEF[n].
Bit not set:
Data of the assigned physical variable are scaled to the default unit shown below.

Assigned physical variable	Default units for: MD10240 $MN_SCALING_SYSTEM_IS_METRIC	
Bit no. (Stated as hex value)	1 = METRIC	0 = INCH
0 Linear position	1 mm	1 inch
1 Angular position	1 degree	1 degree
2 Linear velocity	1 mm/min	1 inch/min
3 Angular speed	1 rpm	1 rpm
4 Linear acceleration	1 m/s²	1 inch/s²
5 Angular acceleration	1 rev/s²	1 rev/s²
6 Linear jerk	1 m/s³	1 inch/s³
7 Angular jerk	1 rev/s³	1 rev/s³
8 Time	1 s	1 s
9 Position-controller servo gain	1/s	1/s
10 Revolutional feedrate	1 mm/rev	1 mm/rev
11 Compensation value linear pos.	1 mm	1 mm
12 Compensation value angular pos.	1 degree	1 degree
13 Cutting rate	1 m/min	1 feet/min

Example:
SCALING_USER_DEF_MASK =?H3?; (Bit nos. 0 and 1 as hex values)
The scale factor defined in the associated MD10230 $MN_SCALING_FACTORS_USER_DEF[n] is activated for linear and angular positions.
If this machine data is changed, a startup is required as otherwise the associated machine data that have physical units would be incorrectly scaled.
Proceed as follows:

- MD changed manually
  First start up and then enter the associated machine data with physical units.
- MD changed via machine data file
  First start up and then reload the machine data file so that the new physical units are taken into account.

If the machine data are altered, alarm 4070 "Scaling machine data altered" is output.
Application example: Input/output of linear velocities is to be in cm/min:
SCALING_USER_DEF_MASK = 0x4 (bit no. 2 as hex value)
SCALING_FACTORS_USER_DEF[2] = 0.1666666667 (10/60)
[Related to:
MD10230 $MN_SCALING_FACTORS_USER_DEF[n] (scaling factors of the physical variables)

10230	SCALING_FACTORS_USER_DEF			EXP, N01	G2
-	Scaling factors of physical variables			DOUBLE	PowerOn
SCAL					
-	15	1.0,1.0,1.0,1.0,1.0,1.0, 1.0,1.0,1.0...	1e-9	-	0/0

Description: The scaling factor of a physical variable that has a unit other than the default unit setting (set bit in MD10220 $MN_SCALING_USER_DEF_MASK) is entered in this MD. The factor must refer to the unit used internally for the physical variable in question.

Index [n]	Assigned physical variable	Internal unit
0	Linear position	1 mm
1	Angular position	1 degree
2	Linear velocity	1 mm/s
3	Angular speed	1 degree/s
4	Linear acceleration	1 mm/s²
5	Angular acceleration	1 degree/s²
6	Linear jerk	1 mm/s³
7	Angular jerk	1 degree/s³
8	Time	1 s
9	Position-controller servo gain	1/s
10	Revolutional feedrate	1 mm/degree
11	Compensation value linear position	1 mm
12	Compensation value angular position	1 degree
13	Cutting rate	1 mm/s

The scaling factor is assigned to the physical variable using the index [0...12]. If this machine data is changed, a startup is required because otherwise the associated machine data that have physical units would be incorrectly scaled.

Proceed as follows:

- MD changed manually

  First start up and then enter the associated machine data with physical units.
- MD changed via machine data file

  First start up and then reload the machine data file so that the new physical units are taken into account.

If the machine data are altered, alarm 4070 "Scaling machine data altered" is output.

Application example(s):

Input/output of angular speeds is to be in new degree/min:
$MN_SCALING_USER_DEF_MASK = 'H8'; (bit no. 3 as hex value)
$MN_SCALING_FACTORS_USER_DEF[3] = 0.01851852; (400/360/60)
[3]: Index for angular speed.

Related to:

MD10220 $MN_SCALING_USER_DEF_MASK (activation of scaling factors).

10240	SCALING_SYSTEM_IS_METRIC			N01	G2,K3,A3,S1
-	Basic system metric			BOOLEAN	PowerOn
SCAL					
-	-	TRUE	-	-	2/2

Description: The MD defines the basic system used by the control for scaling length-dependent physical variables for data input/output.
All corresponding data are stored internally in the basic units of 1 mm, 1 degree and 1 sec.
In the case of access from the interpreter (part program and download), from the operator panel (variable service) or through external communication, scaling takes place in the following units:
MD10240 $MN_SCALING_SYSTEM_IS_METRIC = 1: scaled in:
mm, mm/min, m/s2 , m/s3, mm/rev.
MD10240 $MN_SCALING_SYSTEM_IS_METRIC = 0: scaled in:
inch, inch/min, inch/s2, inch/s3, inch/rev.
The selection of the basic system also defines the interpretation of the programmed F value for linear axes:

	metric	inch
G94	mm/min	inch/min
G95	mm/rev.	inch/rev.

If this machine data is changed, a startup is required because otherwise the associated machine data that have physical units would be incorrectly scaled.
Proceed as follows:
- MD changed manually

First start up and then enter the associated machine data with physical units.
- MD changed via machine data file

First start up and then reload the machine data file so that the new physical units are taken into account.
If the machine data are altered, alarm 4070 "Scaling machine data altered" is output.
Application example(s):
Startup in the metric system and then change to inch system.
Special cases, errors:
The factor used for changing from 1 mm to 1 inch can be changed with MD10250 $MN_SCALING_VALUE_INCH.

10250	SCALING_VALUE_INCH			EXP	G2
-	Conversion factor for INCH			DOUBLE	PowerOn
SCAL					
-	-	25.4	1e-9	-	0/0

Description:

The MD contains the conversion factor from metric to inch.

This factor is only active with the selection of the non-metric basic system (MD10240 $MN_SCALING_SYSTEM_IS_METRIC = 0) in the following conversions:

- Programmed F values for linear axes
- Input/output of lengths and length-dependent data (e.g. when uploading machine data, work offsets)

Programmed geometry axis positions are converted by this factor when the measuring system programmed with G70/G71 is different from the selected basic system (SCAL-ING_ SYSTEM_IS_METRIC).

Programmed synchronous axis positions are converted by the corresponding axial factors (MD31200 $MA_SCALING_FAKTOR_G70_G71) when the measuring system programmed with G70/G71 is different from the selected basic system (MD10240 $MN_SCALING_SYSTEM_IS_METRIC). Settings other than the default 25.4 should only be made in exceptional cases as the correct display of the unit on the operator interface depends on this value.

If this machine data is changed, a startup is required because otherwise the associated machine data that have physical units would be incorrectly scaled.

Proceed as follows:

- MD changed manually

  --> Start up and then enter the associated machine data with physical units.
- MD changed via machine data file

  -->Start up and then reload the machine data file so that the new physical units are taken into account.

If the machine data are altered, alarm 4070 "Scaling machine data altered" is output.

Application example(s):

This conversion factor is used if a changeover is made from metric to inch or a customized measuring system after startup. Then all the input machine data, among other things, are converted by this factor. The converted values are then given at the next read out and on the operator panel.

Related to:

MD10240 $MN_SCALING_SYSTEM_IS_METRIC

10260	CONVERT_SCALING_SYSTEM			EXP	-
-	Enable basic system conversion			BOOLEAN	PowerOn
LINK					
-	-	TRUE	-	-	1/1

Description:

Determines the handling of MD10240 $MN_SCALING_SYSTEM_IS_METRIC.
0: Inch/metric behavior conforms to SW1-SW4
1: Inch/metric behavior from SW5
Inch/metric functionality of SW5:
1. Switch over the systems of units with HMI softkey
2. New G codes G700/G710
3. Data backup with system of unit recognition INCH/METRIC
4. Automatic data conversion on change of system of units
- All zero point offsets
- Compensation data (EEC, QEC)
- Tool offsets
- etc.

The change from MD10260 $MN_CONVERT_SCALING_SYSTEM leads to alarm 4070!
This alarm is designed to indicate that data which remain active after a POWERON are not subjected to automatic conversion from SW1-SW4 and SW5 formats.

10270	POS_TAB_SCALING_SYSTEM			N01, N09	T1,N3,G2
-	System of units of position tables			BYTE	Reset
-					
-	-	0	0	1	0/0

Description:

Defines the measuring system for the positional data for the following machine data
MD10910 $MN_INDEX_AX_POS_TAB_1
MD10930 $MN_INDEX_AX_POS_TAB_2
SD41500 $SN_SW_CAM_MINUS_POS_TAB_1
SD41501 $SN_SW_CAM_PLUS_POS_TAB_1
0: metric
1: inch
This machine data is only evaluated for MD10260 $MN_CONVERT_SCALING_SYSTEM = 1.
Related to:
MD10260 $MN_CONVERT_SCALING_SYSTEM
MD10910 $MN_INDEX_AX_POS_TAB_1
MD10930 $MN_INDEX_AX_POS_TAB_2
SD41500 $SN_SW_CAM_MINUS_POS_TAB_1
SD41501 $SN_SW_CAM_PLUS_POS_TAB_1

10280	PROG_FUNCTION_MASK			EXP, N01	K1
-	Comparing (> and <) compatible with SW6.3			DWORD	PowerOn
-					
-	-	0x0	0	0x7	0/0

Description: Bit mask for parameterizing various sub-program commands

Bit Hexadec.Meaning with bit set
value

0: 0x1Comparison commands ">" and "<" are processed as for SW 6.3 and earlier:

Sub-program data of the type REAL are mapped internally in the IEEE 64 bit format. This mode maps decimal numbers inaccurately if this format's 52-bit wide mantissa is inadequate to map the number in binary notation. To solve this problem, all comparison commands (==, <>, >=, <=, > and <) are checked for relative equality of 1E-12.

This procedure is switched off for greater than (>) and less than (<) comparisons by setting bit 0. (Compatibility setting for software releases earlier than SW 6.4)

1: 0x2Programming the channel names from machine data MD20000 $MC_CHAN_NAME

By setting bit 1, the channel name stored in machine data MD20000 $MC_CHAN_NAME can be programmed in the part program. The channel name can thus also be programmed instead of a numerical value for the channel number in programming coordination commands such as (START(), INIT(), WAIT() etc.

2: 0x4reserved

10284	DISPLAY_FUNCTION_MASK			EXP, N01	-
-	BTSS-variable lastBlockNoStr active			DWORD	PowerOn
-					
-	-	0x0	-	-	0/0

Description: Bit mask for parameterizing various display variables:

BitNo. Hexadec. Meaning with bit set
value

Bit0: 0x1

Parameters are assigned to the OPI variable lastBlockNoStr in the SPARP and SPARPP blocks.

Bit1: 0x2

Concerns the OPI variable cmdSpeed in the SPARPP block. If the bit is set, the variable returns the programmed speed even if the spindle is at a standstill or in another mode (positioning mode, axis mode).

Bit2 0x4

Concerns the OPI variable cmdSpeed in the SPARPP block. (reserved for constant cutting speed)

Bit8: 0x100

Servotrace manages larger numerical values internally. Overruns in data format are avoided. The accuracy may be reduced with large numerical values.

10290	CC_TDA_PARAM_UNIT			N09	G2
-	Physical units of tool data for compile cycles			DWORD	PowerOn
-					
-	1	0,0,0,0,0,0,0,0,0,0	0	9	0/0

Description:

```
Physical units for the user-defined tool-specific data:
0 ;No unit
1 ;Linear position       [ mm ; inch ]
2 ;Angular position      [ degree ; degree ]
3 ;Linear velocity       [ mm/min ; inch/min ]
4 ;Angular speed         [ rpm ; rpm ]
5 ;Linear acceleration   [ m/s²  ; inch/s² ]
6 ;Angular acceleration. [ rev/s ² ; rev/s ² ]
7 ;Linear jerk           [ m/s ³ ; inch/s ³  ]
8 ;Angular jerk          [ rev/s ³ ; rev/s ³ ]
9 ;Revolutional feedrate [ mm/rev ; inch/rev ]
Only available if bit 2 (0x4) is set in MD18080 $MN_MM_TOOL_MANAGEMENT_MASK
```

10291	CCS_TDA_PARAM_UNIT			N09	-
-	physical units of SIEMENS-OEM tool data			DWORD	PowerOn
-					
-	1	0,0,0,0,0,0,0,0,0,0	0	9	0/0

Description:

```
Physical units for application-specific tool-specific data:
0:   No unit
1:   Linear position               [ mm; inch ]
2:   Angular position              [ degree ; degree ]
3:   Linear velocity               [ mm/min ; inch/min ]
4:   Angular speed                 [ rpm ; rpm ]
5:   Linear acceleration           [ m/s² ; inch/s² ]
6:   Angular acceleration          [ rev/s² ; rev/s² ]
7:   Linear jerk                   [ m/s³ ; inch/s³ ]
8:   Angular jerk                  [ rev/s³ ; rev/s³ ]
9:   Feedrate per revolution       [ mm/rev; inch/rev]
Only available if Bit 2 (0x4) is set in MD18080 $MN_MM_TOOL_MANAGEMENT_MASK.
Related to:
 MD18204 $MN_MM_NUM_CCS_TDA_PARAM
```

10292	CC_TOA_PARAM_UNIT			N09	G2
-	Physical units of cutting edge data for compile cycles			DWORD	PowerOn
-					
-	1	0,0,0,0,0,0,0,0,0,0	0	9	0/0

Description:

Physical units for the user-defined cutting edge data:
0 ;No unit
1 ;Linear position [mm ; inch]
2 ;Angular position [degree ; degree]
3 ;Linear velocity [mm/min ; inch/min]
4 ;Angular speed [rpm ; rpm]
5 ;Linear acceleration [m/s² ; inch/s²]
6 ;Angular acceleration. [rev/s ² ; rev/s ²]
7 ;Linear jerk [m/s ³ ; inch/s ³]
8 ;Angular jerk [rev/s ³ ; rev/s ³]
9 ;Revolutional feedrate [mm/rev ; inch/rev]
Only available if bit 2 (0x4) is set in MD18080 $MN_MM_TOOL_MANAGEMENT_MASK

10293	CCS_TOA_PARAM_UNIT			N09	-
-	Physical units of SIEMENS-OEM cutting edge data			DWORD	PowerOn
-					
-	1	0,0,0,0,0,0,0,0,0,0	0	9	0/0

Description:

Physical units for application-specific cutting data:
0 : No unit
1 : Linear position [mm ; inch]
2 : Angular position [degree ; degree]
3 : Linear velocity [mm/min ; inch/min]
4 : Angular speed [rpm ; rpm]
5 : Linear acceleration [m/s² ; inch/s²]
6 : Angular acceleration [rev/s² ; rev/s²]
7 : Linear jerk [m/s³ ; inch/s³]
8 : Angular jerk [rev/s³ ; rev/s³]
9 : Feedrate per revolution [mm/rev; inch/rev]
Only available if Bit 2 (0x4) is set in MD18080 $MN_MM_TOOL_MANAGEMENT_MASK.
Related to:
MD18206 $MN_MM_NUM_CCS_TOA_PARAM

10300	FASTIO_ANA_NUM_INPUTS			N10	A4,TE1
-	Number of active analog NCK inputs			BYTE	PowerOn
-					
-	-	0	0	8	0/0

Description:

This machine data defines the number of usable analog NCK inputs on the control.
Only these analog NCK inputs can be addressed by the NC part program or assigned by NC functions.
If more analog NCK inputs are defined with the machine data than are available in the hardware of the control, the binary analog actual value is set to zero in the control for the inputs that do not exist in the hardware. The NCK value can be altered by the PLC.

Note:

CPU computing time on the interpolation level is required for processing the digital and analog NCK I/Os. The number of active NCK I/Os should therefore be limited to the demands of the machine so that the interpolation cycle time is not unnecessarily loaded.

10310	FASTIO_ANA_NUM_OUTPUTS			N10	A4
-	Number of active analog NCK outputs			BYTE	PowerOn
-					
-	-	0	0	8	0/0

Description: This machine data defines the number of usable analog NCK outputs on the control.

Only these analog NCK outputs can be addressed by the NC part program or assigned by NC functions.

If more analog NCK outputs are defined with the machine data than are available in the hardware of the control, no alarm is triggered. The analog values specified by the part program can be read by the PLC.

Note:

CPU computing time on the interpolation level is required for processing the digital and analog NCK I/Os. The number of active NCK I/Os should therefore be limited to the demands of the machine so that the interpolation cycle time is not unnecessarily loaded.

10350	FASTIO_DIG_NUM_INPUTS			N10	A4,TE1
-	Number of active digital NCK input bytes			BYTE	PowerOn
-					
-	-	2	1	5	2/2

Description: The number of bytes of the digital NCK inputs that can be used on the control are defined in this machine data.

These digital NCK inputs can be read directly by the part program. Moreover, the signal state at the HW inputs can also be changed by the PLC.

If more digital NCK inputs are defined in the machine data than are available in the control hardware, a signal status of 0 is set in the control for the inputs that do not exist in the hardware. The NCK value can be altered by the PLC.

Related to:

NC/PLC interface signal V2800 0000 (Disable the digital NCK inputs 1-8)

NC/PLC interface signal VB2800 1000 (Disable the external digital inputs 9-40)

NC/PLC interface signal V2800 0001(PLC setting for digital NCK inputs 1-9)

NC/PLC interface signal VB2800 1001 (PLC values for external digital inputs 9-40)

NC/PLC interface signal V2900 0000,1000 (Actual value for digital NCK inputs)

10360	FASTIO_DIG_NUM_OUTPUTS			N10	A4,TE8
-	Number of active digital NCK output bytes			BYTE	PowerOn
-					
-	-	2	0	5	2/2

Description: The number of bytes for digital NCK outputs that can be used on the control are defined in this machine data.
These digital NCK outputs can be set directly by the part program. From the PLC can

- the digital outputs with the NC/PLC interface signal V2800 0004,1008 (Disable the digital NCK outputs).
- with the NC/PLC interface signal V2800 0005,1009 (Overwrite mask for digital NCK outputs).
- with the NC/PLC interface signal V2800 0007,1011 (Setting mask for digital NCK outputs).

If more digital NCK outputs are defined in the machine data than are available in the control hardware, no alarm is triggered. The signal states specified by the part program can be read by the PLC.
Special cases:
Digital NCK outputs 5 to 8 can be processed only by the PLC (no hardware outputs).
Related to:

NC/PLC interface signal V2800 0004,1008 (Disable the digital NCK outputs)
NC/PLC interface signal V2800 0005,1009 (Overwrite mask for digital NCK outputs)
NC/PLC interface signal V2800 0006,1001 (PLC setting value for digital NCK outputs)
NC/PLC interface signal V2800 0007,1011 (Setting mask for digital NCK outputs)
NC/PLC interface signal V2900 0004,1004 (Setpoint for digital NCK outputs)

10361	FASTIO_DIG_SHORT_CIRCUIT			N10	A4
-	Short circuit of digital inputs and outputs			DWORD	PowerOn
-					
-	10	0,0,0,0,0,0,0,0,0,0	-	-	1/1

Description: Defined short circuits between digital output and input signals of the high-speed NCK I/Os are realized by linking the signals read in from the high-speed NCK I/Os or the PLC interface to defined output signals.
The output signals always remain unchanged by the link, the inputs that have to be taken into account internally arise from the read inputs and the link.
If a plurality of output bits are specified for one input bit in overwrite mode, the last defined assignment in the list determines the result.
The definition of non-existent or non-activated inputs/outputs is ignored without an alarm.
Bits 0-7:Number of the input byte to be written (1 - 5)
Bits 8-15:Bit number within the input byte (1 - 8)
Link:
The type of link is selected by adding a hexadecimal number to the input bit number:

00 Overwrite input identically to output
A0 Input is AND-gated to the read input with the status of the stated output

B0 Input is OR-gated to the read input with the status of the stated output

Bits 16-23:Number of the output byte to be used (1 - 5)

Bits 24-31:Bit number within the output byte (1 - 8)

Example:

$MN_FASTIO_DIG_SHORT_CIRCUIT[0] = 0x04010302

Input: 3rd bit of the 2nd byte

Output: 4th bit of the 1st byte (= 4th onboard NCU output)

The input status is overwritten by the specified output

$MN_FASTIO_DIG_SHORT_CIRCUIT[1] = 0x0705A201

Input: 2nd bit of the 1st byte (= 2nd onboard NCU input)

Output: 7th bit of the 5th byte

The input status is AND-gated with the specified output

$MN_FASTIO_DIG_SHORT_CIRCUIT[2] = 0x0103B502

Input: 5th bit of the 2nd byte

Output: 1st bit of the 3rd byte

The input status is OR-gated with the specified output

Related to:

MD10350 $MN_FASTIO_DIG_NUM_INPUTS,

MD10360 $MN_FASTIO_DIG_NUM_OUTPUTS.

References: /FB/, A4, "Digital and Analog NCK I/Os"

10362	HW_ASSIGN_ANA_FASTIN			N10	A4,TE1
-	Hardware assignment of the fast analog NCK inputs			DWORD	PowerOn
-					
-	1	0x01000000,0x01000000,0x01000000...	0x01000000	0x060003FF	0/0

Description:

For PROFIBUS/PROFINET:

1st + 2nd byte indicate the logical start address of the I/O slot on the PROFIBUS/PROFINET:

Value 0000 means NO active slot

Values 0001..0100 are reserved for the PLC process image (the value of input slots can be read by the NCK without errors, but output slots are forbidden in this range, and cause an alarm on power up)

1st byte = LowByte of the logical start address

2nd byte = HighByte of the logical start address

3nd byte = 0 = without meaning

4th byte = 5 = segment no. for PROFIBUS/PROFINET

The individual bytes are explained in MD10366 $MN_HW_ASSIGN_DIG_FASTIN.

[hw] = Index (0 to 7) for addressing the external analog inputs

Related to:

MD10366 $MN_HW_ASSIGN_DIG_FASTIN

MD10368 $MN_HW_ASSIGN_DIG_FASTOUT

MD10364 $MN_HW_ASSIGN_ANA_FASTOUT

10364	HW_ASSIGN_ANA_FASTOUT			N10	A4,TE3
-	Hardware assignment of external analog NCK outputs			DWORD	PowerOn
-					
-	1	0x01000000,0x01000000,0x01000000...	0x01000000	0x060003FF	0/0

Description:

For PROFIBUS/PROFINET:

1st + 2nd byte indicate the logical start address of the I/O slot on the PROFIBUS/PROFINET:

Value 0000 means NO active slot

Values 0001..0100 are reserved for the PLC process image (the value of input slots can be read by the NCK without errors; however, output slots are forbidden in this range, and cause an alarm on power up)

1st byte = LowByte of the logical start address

2nd byte = HighByte of the logical start address

3rd byte = 0 = without meaning

4th byte = 5 = segment no. for PROFIBUS/PROFINET

The individual bytes are explained in MD10366 $MN_HW_ASSIGN_DIG_FASTIN.

Related to:

MD10366 $MN_HW_ASSIGN_DIG_FASTIN

MD10368 $MN_HW_ASSIGN_DIG_FASTOUT

MD10362 $MN_HW_ASSIGN_ANA_FASTIN

10366	HW_ASSIGN_DIG_FASTIN			N10	A4,TE1
-	Hardware assignment of external digital NCK inputs			DWORD	PowerOn
-					
802d-cu3	1	0x0	0x0	0x00010101	2/2
802d-ng2	1	0x00010101	0x0	0x00010101	2/2
802d-ng3	1	0x00010101	0x0	0x00010101	2/2
802d-tm1	1	0x0	0x0	0x00010101	2/2
802d-tm2	1	0x0	0x0	0x00010101	2/2
802d-tm3	1	0x0	0x0	0x00010101	2/2

Description:

For SIMODRIVE611D (terminal block):

The following 4 bytes assign the external digital NCK I/Os to the hardware:

1st byte: I/O no.
2nd byte: Submodule no.
3rd byte: Module no.
4th byte: Segment no.

As soon as value 0 is entered in byte 3 (module no.), the output byte concerned is not processed by the control.

I/O no.:

Number of the I/O byte on the DP compact module (range: 1 to 2; always 1 with analog inputs/outputs)

Submodule no.:

Submodule slot on the terminal block into which the DP compact module is inserted (range: 1 to 8)

Module no.:

Number of the logical slot into which the terminal block with the external I/Os is inserted. The logical slot is assigned to a physical slot by MD13010 $MN_DRIVE_LOGIC_NR (logical drive number). Each module occupies a physical slot.

```
Segment no.:
   Always 1 for 840D (ID for SIMODRIVE611D bus)
        Example:
   HW_ASSIGN_DIGITAL_FASTIN[3] = 01 04 03 02
    1st byte: 02 =     2nd input byte of a 16 bit input module
    2nd byte: 03 =    Input module inserted in slot 3 of the terminal block
    3rd byte: 04 =     Terminal block inserted at logical drive number 4
    4th byte: 01 =     ID for 611D bus
For PROFIBUS/PROFINET:
   1st + 2nd byte indicate the logical start address of the I/O slot on the
PROFIBUS/PROFINET:
Value 0000 means NO active slot
Values 0001..0100 are reserved for the PLC process image (the value of input
slots can be read by the NCK without errors; however, output slots are for-
bidden in this range, and cause an alarm on power up)
   1st byte = LowByte of the logical start address
   2nd byte = HighByte of the logical start address
   3rd byte = 0 = without meaning
   4th byte = 5 = segment no. for PROFIBUS/PROFINET
Module no.:   1 ... MD_MAXNUM_SIMO611D_AXES:
   Number of the logical slot in which the terminal block with the external
   I/Os is inserted. The logical slot is assigned to a physical slot by
   MD13010 $MN_DRIVE_LOGIC_NR, it is activated by MD13000
   $MN_DRIVE_IS_ACTIVE.
1st + 2nd bytes give the logical start address of the I/O slot on the PROFI-
BUS
1st byte = low byte
2nd byte = high byte
Value 0000 means NO active slots
Values 0001..007F  are reserved for the PLC (NCK can also read the value for
input slots without error, but output slots are forbidden in this range and
lead to an alarm during startup)
Values 0080..02FF  are valid
Values > 02FF  are invalid
Example:
HW_ASSIGN_DIGITAL_FASTIN[3] = '05000302'
1st + 2nd byte:   0302 (hex) = logical start address 770 (decimal)
3rd byte:   00 = no significance
4th byte:   05 = ID for PROFIBUS/PROFINET
Related to:
   MD10368 $MN_HW_ASSIGN_DIG_FASTOUT
   MD10362 $MN_HW_ASSIGN_ANA_FASTIN
   MD10364 $MN_HW_ASSIGN_ANA_FASTOUT
```

10368	HW_ASSIGN_DIG_FASTOUT			N10	A4
-	Hardware assignment of external digital NCK outputs			DWORD	PowerOn
-					
802d-cu3	1	0x0	0x0	0x00010101	2/2
802d-ng2	1	0x00010101	0x0	0x00010101	2/2
802d-ng3	1	0x00010101	0x0	0x00010101	2/2
802d-tm1	1	0x0	0x0	0x00010101	2/2
802d-tm2	1	0x0	0x0	0x00010101	2/2
802d-tm3	1	0x0	0x0	0x00010101	2/2

Description:

For PROFIBUS/PROFINET:

1st + 2nd byte indicate the logical start address of the I/O slot on the PROFIBUS/PROFINET:

Value 0000 means NO active slot

Values 0001..0100 are reserved for the PLC process image (the value of input slots can be read by the NCK without errors; however, output slots are forbidden in this range, and cause an alarm on power up)

1st byte = LowByte of the logical start address

2nd byte = HighByte of the logical start address

3rd byte = 0 = without meaning

4th byte = 5 = segment no. for PROFIBUS/PROFINET

The individual bytes are explained under MD10366 $MN_HW_ASSIGN_DIG_FASTIN.

[hw] = Index (0 to 3) for addressing the external digital output bytes

Related to:

MD10366 $MN_HW_ASSIGN_DIG_FASTIN

MD10362 $MN_HW_ASSIGN_ANA_FASTIN

MD10364 $MN_HW_ASSIGN_ANA_FASTOUT

10430	CC_HW_DEBUG_MASK			EXP	OEM
-	Hardware debug mask for compile cycles			DWORD	PowerOn
NBUP, NDLD					
-	-	0	0	0x7fffffff	0/0

Description:

Setting of special responses to peripheral HW interfaces for NCK debug

For practical debugging of NCK software, among other things, the response of peripheral units to the loss of the NCK sign of life must be suppressed when the NCK software has run to a breakpoint.

Bit 0(LSB)-3:

For practical debugging of NCK software, among other things, the response of peripheral units to the loss of the NCK sign of life must be suppressed when the NCK software has run to a breakpoint.

Meaning of set bits:

Bit 0:

Drive modules ignore the loss of the NCK sign of life

Bit 1:

Terminal blocks ignore the loss of the NCK sign of life

Bit 3:

PLC ignores the loss of the NCK sign of life

Bit 4:

Recording of internal and external control commands. Recording the control sequences and storing them in a file in the passive file system. One can trace the exact sequence between the incoming harware signals of the PLC interface and the internal sequences with the aid of the recording file.

Bit 5:

Servotrace: Enable physical addresses without access control

Bit10:

Test for measuring function. If this bit is set, one can use the GUD Variables CHAN INT MEA_TASK and CHAN INT MEA_COUNTER to transfer the inverse transformation of the measured values into cyclical and non-cyclical tasks.

Bit11:

No EMERGENCY STOP alarm on loss of PLC sign of life. If the PLC sign of life is not obtained within the time defined in MD10100 $MN_PLC_CYCLIC_TIMEOUT, an alarm is not issued, merely the axis release withdrawn. (Application case: debugging the PLC user program)

Bit15:

Reserved for gantry startup help.

10450	SW_CAM_ASSIGN_TAB			N09	N3
-	Assignment of software cams to machine axes			BYTE	PowerOn
-					
802d-cu3	8	0,0,0,

10460	SW_CAM_MINUS_LEAD_TIME			N09	N3
s	Lead or delay time at minus cams 1-16			DOUBLE	PowerOn
-					
802d-cu3	8	0.0,0.0,0.0,0.0,0.0,0.0,0.0,0.0,0.0,0.0...	-	-	3/3
802d-ng2	8	0.0,0.0,0.0,0.0,0.0,0.0,0.0,0.0,0.0,0.0...	-	-	3/3
802d-ng3	8	0.0,0.0,0.0,0.0,0.0,0.0,0.0,0.0,0.0,0.0...	-	-	3/3
802d-tm1	1	0.0,0.0,0.0,0.0,0.0,0.0,0.0,0.0,0.0,0.0...	-	-	0/0
802d-tm2	1	0.0,0.0,0.0,0.0,0.0,0.0,0.0,0.0,0.0,0.0...	-	-	0/0
802d-tm3	1	0.0,0.0,0.0,0.0,0.0,0.0,0.0,0.0,0.0,0.0...	-	-	0/0

Description: A lead or delay time can be assigned in this machine data to each minus cam 1-8 to compensate for delay times.
The switching edge of the associated cam signal is advanced or delayed by the time value entered.
Positive value: --> Lead time
Negative value: --> Delay time
Serves to compensate for the constant proportion of the internal delay time between actual value acquisition and signal output.
Index [n] of the machine data addresses the cam pair:
n = 0, 1, ... , 8 correspond to cam pairs 1, 2, ... , 8
This machine data is added to the setting data SD41520 $SN_SW_CAM_MINUS_TIME_TAB_1[n].
Related to:
SD41520 $SN_SW_CAM_MINUS_TIME_TAB_1[n] (lead or delay time on minus cams 1 - 8)

10461	SW_CAM_PLUS_LEAD_TIME			N09	N3
s	Lead or delay time at plus cams 1-16			DOUBLE	PowerOn
-					
802d-cu3	8	0.0,0.0,0.0,0.0,0.0,0.0,0.0,0.0,0.0,0.0...	-	-	3/3
802d-ng2	8	0.0,0.0,0.0,0.0,0.0,0.0,0.0,0.0,0.0,0.0...	-	-	3/3
802d-ng3	8	0.0,0.0,0.0,0.0,0.0,0.0,0.0,0.0,0.0,0.0...	-	-	3/3
802d-tm1	1	0.0,0.0,0.0,0.0,0.0,0.0,0.0,0.0,0.0,0.0...	-	-	0/0
802d-tm2	1	0.0,0.0,0.0,0.0,0.0,0.0,0.0,0.0,0.0,0.0...	-	-	0/0
802d-tm3	1	0.0,0.0,0.0,0.0,0.0,0.0,0.0,0.0,0.0,0.0...	-	-	0/0

Description: A lead or delay time can be assigned in this machine data to each plus cam 1-8 to compensate for delay times.
The switching edge of the associated cam signal is advanced or delayed by the time value entered.
Positive value: --> Lead time

Negative value: --> Delay time
Serves to compensate for the constant proportion of the internal delay time between actual value acquisition and signal output.
Index [n] of the machine data addresses the cam pair:
n = 0, 1, ... , 7 correspond to cam pairs 1, 2, ... , 8
This machine data is added to the setting data SD41521 $SN_SW_CAM_PLUS_TIME_TAB_1[n].
Related to:
SD41521 $SN_SW_CAM_PLUS_TIME_TAB_1[n] (lead or delay time on plus cams 1 - 8)

10470	SW_CAM_ASSIGN_FASTOUT_1			N09	N3
-	Hardware assignment for output of cams 1-8 to NCK I/Os			DWORD	PowerOn
-					
802d-cu3	-	0	-	-	2/2
802d-ng2	-	0	-	-	2/2
802d-ng3	-	0	-	-	2/2
802d-tm1	-	0	-	-	0/0
802d-tm2	-	0	-	-	0/0
802d-tm3	-	0	-	-	0/0

Description: The cam signal status can be output to the NCK I/Os as well as to the PLC.
The hardware assignment of the minus and plus cam signals to the digital output bytes used for the NCK I/Os is made in this machine data for cam pairs 1 - 8.
The assigned output signals can also be inverted with this machine data.
The MD is coded as follows:
Bits 0-7: No. of 1st HW byte used with digital outputs
Bits 8-15: No. of 2nd HW byte used with digital outputs
Bits 16-23: Inversion mask for writing 1st HW byte used
Bits 24-31: Inversion mask for writing 2nd HW byte used
Bit=0: Do not invert
Bit=1: Invert
If both HW bytes are specified, the 1st byte contains the minus cam signals and the 2nd byte the plus cam signals.
If the 2nd byte is not specified (= "0"), then the 8 cams are output as an AND operation of the minus and plus cam signals via the 1st HW byte using the 1st inversion mask.
The status of the non-inverted output signal for linear axes and for rotary axes with "plus cam - minus cam < 180 degrees" is:
"1" between minus and plus cams
"0" outside this range
The status of the non-inverted output signal for rotary axes with "plus cam - minus cam >= 180 degrees" is:
"0" between minus and plus cams
"1" outside this range
The following must be specified as the byte address for the digital outputs:
1: for on-board byte
2 - 5: for external bytes

10480	SW_CAM_TIMER_FASTOUT_MASK			N09	N3
-	Mask for output of cam signals via timer interr. to NCU			DWORD	PowerOn
-					
802d-cu3	-	0	-	-	2/2
802d-ng2	-	0	-	-	2/2
802d-ng3	-	0	-	-	2/2
802d-tm1	-	0	-	-	0/0
802d-tm2	-	0	-	-	0/0
802d-tm3	-	0	-	-	0/0

Description:

A timer-controlled output to the 4 on-board outputs of the NCK I/Os can be selected in this machine data for 4 cam pairs.
In this case, the minus and plus signals of a cam pair are "EXCLUSIVE OR'd" for output as one signal.
Meaning for set bit:
Associated cam (minus and plus cam signals "EXCLUSIVE OR'd") is output via a timer interrupt at one of the 4 on-board outputs of the NCU.
The on-board outputs are assigned in order of increasing machine axis numbers (with assigned cam pairs).
Example:

```
Machine axis 3  = cam pair 1  -->   on-board output 3
Machine axis 1  = cam pair 2  -->   on-board output 1
Machine axis 7  = cam pair 3  -->   on-board output 4
Machine axis 2  = cam pair 4  -->   on-board output 2
```

If a plurality of cam pairs are set for one machine axis, then this axis is assigned in ascending order of the cam pairs.
Example:

```
Machine axis 3  = cam pair 1  -->   on-board output 2
Machine axis 3  = cam pair 2  -->   on-board output 3
Machine axis 7  = cam pair 3  -->   on-board output 4
Machine axis 2  = cam pair 4  -->   on-board output 1
```

This function works independently of the assignment set in MD10470 $MN_SW_CAM_ASSIGN_FASTOUT_1 or MD10471 $MN_SW_CAM_ASSIGN_FASTOUT_2.
Note:

The on-board byte must not be used more than once.

If there is more than one signal change in the IPO cycle for the cam pairs specified in the MD, then the cam pair with the lowest number determines the instant of output. The other signals change at the same time.

10485	SW_CAM_MODE			N09	N3
-	Behavior of SW cams			DWORD	PowerOn
-					
802d-cu3	-	0	-	-	2/2
802d-ng2	-	0	-	-	2/2
802d-ng3	-	0	-	-	2/2
802d-tm1	-	0	-	-	0/0
802d-tm2	-	0	-	-	0/0
802d-tm3	-	0	-	-	0/0

Description: Meaning of the individual bits:

Bit 0(LSB) = 0:

If more than 1 signal change per interpolation cycle is due for the cams specified in MD10480 $MN_SW_CAM_TIMER_FASTOUT_MASK, the cam having the lowest number will determine the output instant. The other signals change at the same instant. That is, a maximum of one interrupt-controlled output is effected per interpolation cycle.

Bit 0(LSB) = 1:

Each cam specified in MD10480 $MN_SW_CAM_TIMER_FASTOUT_MASK will be output precisely at the time of the interpolation cycle. There is no output priority of the cams. A maximum of 8 interrupt-controlled outputs can be performed per interpolation cycle.

Bit 1 = 0:

Inversion of signal behavior from plus cam, where plus cam - minus cam >= 180 degr.

Bit 1 = 1:

No inversion of signal behavior from plus cam, where plus cam - minus cam >= 180 degr.

Signal behavior on-board output:

Overtravelling:

Minus cam plus cam

Traversing direction:

positive 0->1 1->0

negative 1->0 0->1

Bit 2 = 0:

No path-time cam

Bit 2 = 1:

Path-time cam for cams where minus position = plus position. The lead/delay time applied is independent of:

- velocity of the axis
- position of the axis
- reversal of traversing direction

The cam is only activated on overtravelling of the cam position. A lead/delay time applied to the minus cam is active and leads to a shift of the whole cam.

Bit 3 = 0:

No alignment signal in case of measurement area selection.

Bit 3 = 1:

Output of an alignment signal for measurement area selection (FM only). On-board output 8 is used permanently.

On-board output 8 = 1: Measurement possible (active range enabled)

On-board output 8 = 0: Measurement not possible
Bit 4 = 0:
and following free

10490	SW_CAM_COMP_NCK_JITTER			N09	-
s	Cam jitter compensation			DOUBLE	NEW CONF
-					
-	-	0	0.0	0.0001	0/0

Description: The compensation value reduces system-related time inaccuracies during output of highly precise cam signals. The default time encumbers the cyclic time level of the control, and should therefore be selected as short as possible. It is recommended to return a cam signal to a measuring input of the control and to increase the compensation value until the scatter of the measured positions cannot be reduced any further.
Currently only active when MD10485 $MN_SW_CAM_MODE Bit0 = 0.

10500	DPIO_LOGIC_ADDRESS_IN			N10	A4
-	Logical slot address of the PROFIBUS/PROFINET I/Os			DWORD	PowerOn
-					
-	16	0,0,0,0,0,0,0,0,0,0,0,0,0,0,0,0	0	8191	-1/2

Description: Logical slot address of the PROFIBUS/PROFINET I/Os usable by the NCK.

10501	DPIO_RANGE_LENGTH_IN			N10	A4
-	Length of the PROFIBUS/PROFINET I/O range			DWORD	PowerOn
-					
-	16	0,0,0,0,0,0,0,0,0,0,0,0,0,0,0,0	0	128	-1/2

Description: Length of the PROFIBUS/PROFINET I/O range consistently usable for the NCK. This range must be defined in STEP 7, hardware configuration.
0: only the first data slot is used.
x: length of the consistent PROFIBUS/PROFINET I/O range
Note: in PROFINET it is not possible to combine several slots in one area.

10502	DPIO_RANGE_ATTRIBUTE_IN			N10	A4
-	Attributes of the PROFIBUS/PROFINET I/Os			DWORD	PowerOn
-					
-	16	0x01,0x01,0x01,0x01, 0x01,0x01,0x01...	0x00	0x0F	-1/2

Description: Attributes of the PROFIBUS/PROFINET I/Os
Bit 0: Little/Big Endian format of the system variable $A_DPx_IN[n,m]
0: Little Endian format
1: Big Endian format

Bit 1: (reserved)
Bit 2: Read input data
0: Read possible through system variable and CC binding (increased performance requirements)
1: Read only possible for CC binding (low performance requirements)
Bit 3: Slot sign-of-life alarm
0: Slot sign-of-life alarms are output
1: Slot sign-of-life alarms are suppressed

10510	DPIO_LOGIC_ADDRESS_OUT			N10	A4
-	Logical slot address of the PROFIBUS/PROFINET I/Os			DWORD	PowerOn
-					
-	16	0,0,0,0,0,0,0,0,0,0,0,0,0,0,0,0	0	8191	-1/2

Description: Logical slot address of the PROFIBUS/PROFINET I/Os usable by the NCK.

10511	DPIO_RANGE_LENGTH_OUT			N10	A4
-	Length of the PROFIBUS I/O range			DWORD	PowerOn
-					
-	16	0,0,0,0,0,0,0,0,0,0,0,0,0,0,0,0	0	128	-1/2

Description: Length of the PROFIBUS I/O range consistently usable for the NCK. This range must be defined in STEP 7, hardware configuration.
0: only the first data slot is used.
x: length of the consistent PROFIBUS I/O range
Note: in PROFINET it is not possible to combine several slots in one area.

10512	DPIO_RANGE_ATTRIBUTE_OUT			N10	A4
-	Attributes of the PROFIBUS/PROFINET I/Os			DWORD	PowerOn
-					
-	16	0x01,0x01,0x01,0x01, 0x01,0x01,0x01...	0x00	0x0F	-1/2

Description: Attributes of the PROFIBUS/PROFINET I/Os
Bit 0: Little/Big Endian format of system variable $A_DPx_OUT[n,m]
0: Little Endian format
1: Big Endian format
Bit 1: Write output data
0: Write only through system variable
1: Write only through CC binding
Bit 2: (reserved)
Bit 3: Slot sign-of-life alarm
0: Slot sign-of-life alarms are output
1: Slot sign-of-life alarms are suppressed

10530	COMPAR_ASSIGN_ANA_INPUT_1			N10	A4
-	Hardware assignment of analog inputs for comparator byte 1			BYTE	PowerOn
-					
-	1	0,0,0,0,0,0,0,0	-	-	0/0

Description: This MD assigns analog inputs 1 to 8 to a bit number of comparator byte 1.
This input bit of the comparator is set to "1" if the comparison between the applied analog value and the associated threshold value (SD41600 $SN_COMPAR_THRESHOLD_1 fulfills the condition parameterized in (MD10540 $MN_COMPAR_TYPE_1).
An analog input can be assigned to a plurality of comparator input bits.
The following generally applies to comparator byte 1:

```
COMPAR_ASSIGN_ANA_INPUT_1 [b] = n
with index:  b = number of comparator input bit (0 to 7)
             n = number of analog input (1 to 8)
```

Example:

```
COMPAR_ASSIGN_ANA_INPUT_1[0] = 1
COMPAR_ASSIGN_ANA_INPUT_1[1] = 2
COMPAR_ASSIGN_ANA_INPUT_1[2] = 1
COMPAR_ASSIGN_ANA_INPUT_1[3] = 3
COMPAR_ASSIGN_ANA_INPUT_1[4] = 3
COMPAR_ASSIGN_ANA_INPUT_1[5] = 1
COMPAR_ASSIGN_ANA_INPUT_1[6] = 1
COMPAR_ASSIGN_ANA_INPUT_1[7] = 1
```

Analog input 1 affects input bits 0, 2 , 5, 6 and 7 of comparator byte 1
Analog input 2 affects input bit 1 of comparator byte 1
Analog input 3 affects input bits 3 and 4 of comparator byte 1
Related to:
MD10540 $MN_COMPAR_TYPE_1
MD10541 $MN_COMPAR_TYPE_2

10531	COMPAR_ASSIGN_ANA_INPUT_2			N10	A4
-	Hardware assignment of analog inputs for comparator byte 2			BYTE	PowerOn
-					
-	1	0,0,0,0,0,0,0,0	-	-	0/0

Description: This MD assigns analog inputs 1 to 8 to a bit number of comparator byte 2.
This input bit of the comparator is set to "1" if the comparison between the applied analog value and the associated threshold value (SD41601 $SN_COMPAR_THRESHOLD_2 fulfills the condition parameterized in (MD10541 $MN_COMPAR_TYPE_2).
An analog input can be assigned to a plurality of comparator input bits.
The following generally applies to comparator byte 2:

```
COMPAR_ASSIGN_ANA_INPUT_2 [b] = n
with index:b = number of comparator input bit (0 to 7)
             n = number of analog input (1 to 8)
```

Example:
COMPAR_ASSIGN_ANA_INPUT_2[0] = 1
COMPAR_ASSIGN_ANA_INPUT_2[1] = 2
COMPAR_ASSIGN_ANA_INPUT_2[2] = 1
COMPAR_ASSIGN_ANA_INPUT_2[3] = 3
COMPAR_ASSIGN_ANA_INPUT_2[4] = 3
COMPAR_ASSIGN_ANA_INPUT_2[5] = 1
COMPAR_ASSIGN_ANA_INPUT_2[6] = 1
COMPAR_ASSIGN_ANA_INPUT_2[7] = 1
Analog input 1 affects input bits 0, 2 , 5, 6 and 7 of comparator byte 2
Analog input 2 affects input bit 1 of comparator byte 2
Analog input 3 affects input bits 3 and 4 of comparator byte 2
Related to:
MD10540 $MN_COMPAR_TYPE_1
MD10541 $MN_COMPAR_TYPE_2

10540	COMPAR_TYPE_1			N10	A4
-	Parameterization for comparator byte 1			DWORD	PowerOn
-					
-	-	0	-	-	0/0

Description: This MD can be used to make the following settings for the individual output bits (0 to 7) of comparator byte 1:

- Bits 0 to 7: Comparison type mask (for comparator output bits 0 to 7)
  Bit = 1: output bit = 1 if analog value >= threshold value
  Bit = 0: output bit = 1 if analog value < threshold value
  (Threshold value defined by SD41600 $SN_COMPAR_THRESHOLD_1)
- Bits 8 to 15: Not used (defined to be set to 0)
- Bits 16 to 23: Assignment of a HW output byte for outputting the comparator states (statement of the byte address)
  Byte = 0: No output via digital NCK outputs
  Byte = 1: Output via digital onboard NCK outputs (1 to 4)
  Byte = 2: Output via external digital NCK outputs 9 to 16
  Byte = 3: Output via external digital NCK outputs 17 to 24
  Byte = 4: Output via external digital NCK outputs 25 to 32
  Byte = 5: Output via external digital NCK outputs 33 to 40
- Bits 24 to 31: Inversion mask for the output of the comparator states (bits 0 to 7)
  Bit = 0: Output bit is not inverted
  Bit = 1: Output bit is inverted

Related to:
MD10530 $MN_COMPAR_ASSIGN_ANA_INPUT_1
MD10531 $MN_COMPAR_ASSIGN_ANA_INPUT_2
SD41600 $SN_COMPAR_THRESHOLD_1
SD41601 $SN_COMPAR_THRESHOLD_2
MD10360 $MN_FASTIO_DIG_NUM_OUTPUTS

10541	COMPAR_TYPE_2			N10	A4
-	Parameterization of comparator byte 2			DWORD	PowerOn
-					
-	-	0	-	-	0/0

Description: This MD can be used to make the following settings for the individual output bits (0 to 7) of comparator byte 2:

- Bits 0 to 7: Comparison type mask (for comparator output bits 0 to 7)
  Bit = 1: output bit = 1 if analog value >= threshold value
  Bit = 0: output bit = 1 if analog value < threshold value
  (Threshold value defined by SD41601 $SN_COMPAR_THRESHOLD_2)
- Bits 8 to 15: not used (defined to be set to 0)
- Bits 16 to 23: Assignment of a HW output byte for outputting the comparator states (statement of the byte address)
- Byte = 0: no output via digital NCK outputs
  Byte = 1: output via digital onboard NCK outputs (1 to 4)
  Byte = 2: output via external digital NCK outputs 9 to 16
  Byte = 3: output via external digital NCK outputs 17 to 24
  Byte = 4: output via external digital NCK outputs 25 to 32
  Byte = 5: output via external digital NCK outputs 33 to 40
- Bits 24 to 31: Inversion mask for the output of the comparator states (bits 0 to 7)
  Bit = 0: Output bit is not inverted
  Bit = 1: Output bit is inverted

Related to:
MD10530 $MN_COMPAR_ASSIGN_ANA_INPUT_1
MD10531 $MN_COMPAR_ASSIGN_ANA_INPUT_2
SD41600 $SN_COMPAR_THRESHOLD_1
SD41601 $SN_COMPAR_THRESHOLD_2
MD10360 $MN_FASTIO_DIG_NUM_OUTPUTS

10600	FRAME_ANGLE_INPUT_MODE			EXP, N01, N09	K2
-	Sequence of rotation in FRAME			BYTE	PowerOn
-					
-	-	1	1	2	0/0

Description: FRAME_ANGLE_INPUT_MODE sets how the rotations (ROT and AROT) around the three geometry axes are defined if more than one rotation is programmed in a block. The order in which these rotations are programmed within the block is irrelevant.
The rotations can be set to be calculated according to:

- Euler angle with FRAME_ANGLE_INPUT_MODE = 2
  The rotations are calculated according to the Euler angle in the following order:
  1. Rotation around Z
  2. Rotation around X
  3. Rotation around Y
- RPY with FRAME_ANGLE_INPUT_MODE = 1
  The rotations are calculated according to the Euler angle in the following order:
  1. Rotation around Z
  2. Rotation around Y
  3. Rotation around X

10602	FRAME_GEOAX_CHANGE_MODE			EXP, N01, N09	K2
-	Frames when changing geometry axes			BYTE	PowerOn
-					
-	-	0	0	5	0/0

Description: Geometry axes can be switched over in the following states:

- Selection and deselection of transformations
- Switchable geometry axes GEOAX()

The current total frame is then defined as follows:

0: The current total frame is canceled.

1: The current total frame is recalculated when geometry axes are switched over. Translations, scaling and mirroring for the new geometry axes become active. The rotations of the old geometry axes still apply.

2: The current total frame is recalculated when geometry axes are switched over. Translations, scaling and mirroring for the new geometry axes become active. If rotations were active before switching over to the current base frames, current settable frame or programmable frame, switchover is aborted with an alarm.

3: The current total frame is deleted when selecting and deselecting transformations.When the GEOAX() command is entered, the frame is recalculated and transaction, scaling and mirroring for the new geometry axes become active. The rotations of the old geometry axes still apply.

10604	WALIM_GEOAX_CHANGE_MODE			EXP, N01, N09	A3
-	Working area limitation by changing geometry axes			BYTE	PowerOn
-					
-	-	0	0	1	0/0

Description: This machine data specifies whether a potentially active working area limitation will remain active after geo axis replacement, or whether it will be deactivated.

Meaning of the MD values:

= 0 Working area limitation will be deactivated when replacing geo axis.

= 1 Working area limitation will remain activated when replacing geo axis.

10610	MIRROR_REF_AX			EXP, N01, N09	K2
-	Reference axis for mirroring			BYTE	PowerOn
-					
-	-	0	0	3	0/0

Description: 0: Mirroring always takes place in the stated axis, without scaling.

The mirroring of a geometry axis can always be related to a defined reference axis.

1: x is the reference axis

Mirroring of the x axis is unique.

Mirroring of the y axis is mapped on:

a mirroring of the x axis and

a rotation of the z axis through 180 degrees.

Mirroring of the z axis is mapped on:

a mirroring of the x axis and

a rotation of the x axis through 180 degrees and

a rotation of the z axis through 180 degrees

2: y is the reference axis
   Mirroring of the x axis is mapped on:
     a mirroring of the y axis and
     a rotation of the z axis through 180 degrees.
   Mirroring of the y axis is unique.
   Mirroring of the z axis is mapped on:
     a mirroring of the y axis and
     a rotation of the x axis through 180 degrees
3: z is the reference axis
   Mirroring of the x axis is mapped on:
     a mirroring of the z axis and
     a rotation of the z axis through 180 degrees and
     a rotation of the x axis through 180 degrees
   Mirroring of the y axis is mapped on:
     a mirroring of the z axis and
     a rotation of the x axis through 180 degrees.
   Mirroring of the z axis is unique.

10612	MIRROR_TOGGLE			EXP, N01, N09	K2
-	Mirror toggle			BYTE	PowerOn
-					
-	-	1	0	1	0/0

Description: Mirror toggle function.
1: Programmed axis values are not evaluated. Toggle switching behavior.
0: Programmed axis values are evaluated.
The axes are mirrored in the case of values not equal to 0 if they are not already mirrored. Mirroring is disabled if the value is 0.

10613	NCBFRAME_RESET_MASK			EXP	K2
-	Active NCU global base frames after reset			DWORD	Reset
-					
-	-	0xFFFF	0	0xFFFF	0/0

Description: Bit mask for the reset setting of the NCU global base frames which are included in the channel.
The following applies:
When MD20110 $MC_RESET_MODE_MASK bit0 = 1 and bit14 = 1
   The entire base frame is derived on reset from the linking of the NCU global base frame field elements whose bit in the bit mask is 1.
When MD20110 $MC_RESET_MODE_MASK bit0 = 1 and bit14 = 0
   The entire base frame is deselected on reset.

10615	NCBFRAME_POWERON_MASK			EXP, N12	K2
-	Reset global base frames after power on			DWORD	PowerOn
-					
-	-	0	0	0xFFFF	0/0

Description: This machine data defines whether global base frames are reset in the data management on Power On.
That is
- Offsets are set to 0,
- Scalings are set to 1.
- Mirroring is disabled.

The individual base frames can be selected separately.
Bit 0 means base frame 0, bit 1 base frame 1 etc.
Value=0: Base frame is retained on Power On
Value=1: Base frame is reset in the data management on Power On.
Related to:
MD24004 $MC_CHBFRAME_POWERON_MASK

10617	FRAME_SAVE_MASK			EXP	K2
-	Behavior of frames in SAVE subroutines			DWORD	PowerOn
-					
-	-	0	0	0x3	0/0

Description: This machine data is used to define which frames are restored with SAVE attribute at return from a subprogram.
Bit 0: Settable frames G54 through G599
Value = 0:
If the same G code is active at subprogram return and subprogram call, the active settable frame is maintained. If not, the settable frame is reactivated when the subprogram is called.
Value = 1:
At subprogram return, the settable frame is reactivated when the subprogram is called.
Bit 1: Basic frame
Value = 0:
The active basic frame is not changed at subprogram return. This is also the case, if a basic frame change is carried out in the subprogram by an operation or by an implicit frame deselection (possibly through TRAFOOF).
Value = 1:
At subprogram return, the basic frame is reactivated when the subprogram is called.

10618	PROTAREA_GEOAX_CHANGE_MODE			EXP, N01, N09	A3
-	Protection range on change of geometry axes			BYTE	PowerOn
-					
802d-cu3	-	0	0	3	1/1
802d-ng2	-	0	0	3	1/1
802d-ng3	-	0	0	3	1/1
802d-tm1	-	0	0	3	-1/2
802d-tm2	-	0	0	3	-1/2
802d-tm3	-	0	0	3	-1/2

Description: This machine data is used to define whether any active protection zones will remain active after a transformation change or geo axis replacement, or whether they will be deactivated.
The machine data is bit-coded with the following meanings:
Bit 0 = 0
Protection zones deactivated on transformation change.
Bit 0 = 1
Active protection zones remain active after transformation change.
Bit 1 = 0
Protection zones deactivated on geo axis replacement.
Bit 1 = 1
Active protection zones remain active after geo axis replacement.

10650	IPO_PARAM_NAME_TAB			EXP, N01	K2
-	Name of interpolation parameters			STRING	PowerOn
-					
-	3	I,J,K	-	-	0/0

Description: List of identifiers for the interpolation parameters
The rules for axis identifiers described in MD20080 $MC_AXCONF_CHANAX_NAME_TAB apply to the selection of identifiers.
The identifiers must be selected so that they do not cause any conflicts with other identifiers (axes, Euler angles, normal vectors, direction vectors, intermediate point coordinates).
Related to:
MD10660 $MN_INTERMEDIATE_POINT_NAME_TAB
References: /PA/, Programming Guide: Fundamentals

10652	CONTOUR_DEF_ANGLE_NAME			EXP, N01, N12	FBFA
-	Name of angle for contour definitions			STRING	PowerOn
-					
-	-	ANG	-	-	0/0

Description: Identifier for contour angle
The identifier must be selected so that no conflict arises with other identifiers (e.g. axes, Euler angles, normal vectors, direction vectors, interpolation point coordinates).

10654	RADIUS_NAME			EXP, N01, N12	FBFA
-	Name of radius for contour definitions			STRING	PowerOn
-					
-	-	RND	-	-	0/0

Description: Identifier for contour radius
The identifier must be selected so that no conflict arises with other identifiers (e.g. axes, Euler angles, normal vectors, direction vectors, intermediate point coordinates).

10656	CHAMFER_NAME			EXP, N01, N12	FBFA
-	Name of chamfer for contour definitions			STRING	PowerOn
-					
-	-	CHR	-	-	0/0

Description: Identifier for contour chamfer
The identifier must be selected so that no conflict arises with other identifiers (e.g. axes, Euler angles, normal vectors, direction vectors, intermediate point coordinates).

10660	INTERMEDIATE_POINT_NAME_TAB			EXP, N01	K2
-	Name of interpolation point coordinates for G2/G3			STRING	PowerOn
-					
-	3	I1,J1,K1	-	-	0/0

Description: List of identifiers for the intermediate point coordinates
The rules for axis identifiers described in MD20080 $MC_AXCONF_CHANAX_NAME_TAB apply to the selection of identifiers. The identifiers must be selected so that they do not cause any conflicts with other identifiers (axes, Euler angles, normal vectors, direction vectors, intermediate point coordinates).
Related to:
MD10650 $MN_IPO_PARAM_NAME_TAB
References: /PG/, Programming Guide: Fundamentals

10670	STAT_NAME			N01, N09	F2
-	Name of state information			STRING	PowerOn
-					
-	-	STAT	-	-	0/0

Description: Identifier for position information for solving ambiguities in Cartesian PTP travel.
An identifier must be chosen that does not conflict with other identifiers (e.g. axes, Euler angles, normal vectors, direction vectors, intermediate point coordinates).

10672	TU_NAME			N01, N09	F2
-	Name of state information of axes			STRING	PowerOn
-					
-	-	TU	-	-	0/0

Description: Identifier for position information of axes for solving ambiguities in Cartesian PTP travel.
An identifier must be chosen that does not conflict with other identifiers (e.g. axes, Euler angles, normal vectors, direction vectors, intermediate point coordinates).

10680	MIN_CONTOUR_SAMPLING_TIME			N01, EXP	-
s	Minimum contour sampling time			DOUBLE	Reset
-					
-	-	0.008	-	-	0/0

Description: Min. possible contour sampling time in seconds. This MD is used to limit the value that can be entered with MD10682 $MN_CONTOUR_SAMPLING_FACTOR, independently of the current interpolation cycle of the control.

10682	CONTOUR_SAMPLING_FACTOR			N01, EXP	-
-	Contour sampling factor			DOUBLE	Reset
-					
-	-	1.0	-	-	1/1

Description: This factor defines the maximum time interval at which a curved contour is sampled in the interpolator.
The maximum sampling time results from the set interpolation cycle (see MD10071 $MN_IPO_CYCLE_TIME) and the factor set with this data and the tolerance set for the geometry axes in MD33100 $MA_COMPRESS_POS_TOL[].
The minimum sampling time cannot be shorter than the time set in MD10680 $MN_MIN_CONTOUR_SAMPLING_TIME.

10700	PREPROCESSING_LEVEL			N01, N02	V2,K1
-	Program preprocessing level			BYTE	PowerOn
-					
-	-	0x01	-	-	1/1

Description: Bit 0= 0:

No preprocessing

Bit 0= 1:

The call description of the cycles is formed during control power on. All the programs in the directories _N_CUS_DIR, _N_CMA_DIR and _N_CST_DIR can be called in the part program without EXTERNAL declaration. If the parameter interface of a cycle is changed in the control, then this change does not become active until after Power On.

Bit 1=1:

During control power on, all cycles in the directories _N_CUS_DIR, _N_CMA_DIR and _N_CST_DIR are preprocessed to form a process-optimizing compilation. These cycles are then processed more quickly. Changes to the cycle programs do not become active until after the next Power On.

Bit 2=1:

During control power on, the Siemens cycles in the directory _N_CST_DIR are preprocessed to form a process-optimizing compilation (from SW 3.5).

Bit 3=1:

During control power on, the user cycles in the directory _N_CUS_DIR are preprocessed to form a process-optimizing compilation (from SW 3.5).

Bit 4=1:

Preprocessing the user cycles in the directory _N_CMA_DIR

Bit 5=1:

All files marked with PREPRO in the PROG statement line are preprocessed (from SW 6.4)

Bit 5=0:

During control power on, all cycles in the directories activated by bits 1 to 4 are preprocessed. This also applies to programs that are not marked with PREPRO.

Bit 6=1:

The compilation is stored in SRAM if there is inadequate space in DRAM (from SW 7.1).

Memory space is required for preprocessing cycles. Better utilization of memory can be achieved by selective setting of the preprocessing:

The runtime-critical cycles are brought together in one directory. The remaining cycles are in the other directory.

References:

/PG/, "Programming Guide Fundamentals" (EXTERNAL declaration)

10702	IGNORE_SINGLEBLOCK_MASK			N01	K1,Z1
-	Prevents stopping at specific blocks in single block mode			DWORD	PowerOn
-					
-	-	0	0	0xFFFF	1/1

Description: This machine data prevents stopping at certain blocks with single block.

Single block stop can be prevented with the following bits of the mask:

Bit0 = 1

Means that there is no stop in any internal ASUB block. Exception: the single block stop has been explicitly activated by the SBLON command.

There are three different internal ASUBs that are triggered by different events.

- Repos: In the case of the events: change of operating mode to a manual mode (JOG, JOGREF,...) unless MODESWITCH_MASK is not set, switch skip block on and off, activate machine data, switch-on overstore, axis replacement, subroutine level abort, switch-on single block, switch dry run feedrate on and off, alarm with compensation block.

- Return: Delete distance-to-go, switchover after TEACH-IN, or deselection of MDI with corresponding MODESWITCH_MASK.

- _N_PROG_EVENT_SPF: Parameterizing MD 20108 $MC_PROG_EVENT_MASK parameterizes the events whereby _N_PROG_EVENT_SPF is executed.

Bit1 = 1

Means that there is no stop in any user ASUB block. Exception: The single block stop has been explicitly activated via the SBLON command.

User ASUBs are linked to an interrupt channel by the part program command SETINT or via the PI- _N_ASUP__. The interrupt channel is then activated via PLC or the high-speed inputs, and the user ASUBs are retracted.

This disables machine data MD20117 $MC_IGNORE_SINGLEBLOCK_ASUP. The NCK behavior corresponds to the machine data assignment MD20117 $MC_IGNORE_SINGLEBLOCK_ASUP= FFFFFFFF.

Bit2 = 1

Means that there is no stop in any intermediate block. Intermediate blocks are generated at, among other events, tool change, ADIS and complicated geometry.

Bit3 = 1

Means that there is no stop in the block search pickup block. The block search pickup block is the 1st block that is loaded into the main run at the start after the search target has been found in the program.

Bit4 = 1

Means that there is no stop in the INIT blocks. INIT blocks are generated from reset immediately after a part program start.

Bit5 = 1

Means that there is no stop in any subprogram block with the parameter DISPLOF.

Bit6 = 1

Means that there is no stop in any block in which the NCK cannot reorganize.

Reorganize is an internal procedure that is needed for mode change after JOG/JOGREF..., switch skip block on and off, activate machine data, axis replacement, switch on overstore, switch on single block, switch dry run feedrate on and off, subroutine level abort, user ASUBs delete distance-to-go, switchover after TEACH-IN. Reorganize is never needed in Reset state.

Example blocks in which reorganize is impossible:

- Tool change
- 1st block after the Repos procedure
- Block after an ASUB from JOG/aborted

Bit7 = 1

Means that there cannot be a stop in any block in which repositioning is impossible.

Reposition is an internal procedure that is needed for mode change after JOG/JOGREF..., switch skip block on and off, activate machine data, axis replacement, switch on overstore, switch on single block, switch dry run feedrate on and off, subroutine level abort, and possibly user ASUBs. Reposition is never needed in Reset state.

Example blocks in which reposition is impossible:

- G33 + blocks in which reorganize is impossible.

Bit8 = 1

Means that there is no stop in a residual block that does not contain traversing information.

Bit9 = 1

Means that there is no stop in a run in/main run synchronization block (e.g.STOPRE, $Variable) that is repeated because of an interruption with Reorg (e.g. mode change).

Bit10= 1

Means that there is no stop in a "tool selection block". "Tool selection block" only occurs with tool management (magazine management or TMMG) active. This block gives the corresponding tool change command to the PLC.

This block is generally generated by T programming from the part program.

Example block "N1010 T="Drill" M6 D1"

Depending on machine data, the "tool selection block" can be held in the interpolator until the PLC has acknowledged the corresponding tool change (see MD20310 $MC_TOOL_MANAGEMENT_MASK). However the program status remains in "run".

Bit11= 1

The control has to automatically generate implicit GET blocks for the axis replacement function (axis replacement: 2 or more channels control one axis alternately) if no explicit GET(D) has been programmed and the following block wants to traverse the axis. (The other channel had previously used this axis).

An explicitly programmed GET may appear as follows "getd(x1,y1,z1) or get(x1,y1,z1)".

There is no stop at explicit or implicit GET blocks in the single block with this bit 11.

Bit12= 1

There is no stop in the single block type 2 in the SBLON block.

Bit13= 1

If an axis is pulled out in the middle of a block and possibly assigned to another channel, then there is no stop at the PREMATURE end of this block. This block follows a REPOSA in order to traverse it to the end, there is no stop until this end has been reached.

Bit14=1

In a part program line, in which a substitution subroutine is called due to NC language replacement, only one stop is performed under the condition that the subroutine includes PROC attribute SBLOF. It is irrelevant whether the subroutine is called at block start and/or end or whether it is exited with M17 or RET.

Bit15=1

Means that there is no stop in any user ASUB block. Exception: The single block stop has been explicitly activated via the SBLON command.

There are three different internal ASUBs that are triggered by different events.

- Repos: In the case of the events: change of operating mode to a manual mode (JOG, JOGREF,...) unless MODESWITCH_MASK is not set, switch skip block on and off, activate machine data, switch-on overstore, axis replacement, subroutine level abort, switch-on single block, switch dry run feedrate on and off, alarm with compensation block.

- Return: Delete distance-to-go, switchover after TEACH-IN, or deselection of MDI with corresponding MODESWITCH_MASK.

Related to:

MD20117 $MC_IGNORE_SINGLEBLOCK_ASUP

10704	DRYRUN_MASK			N01	V1
-	Dry run feedrate activation			BYTE	PowerOn
-					
-	-	0	0	2	1/1

Description:

DRYRUN_MASK == 0

Dryrun can only be switched on or off at the end of the block.

When DRYRUN_MASK = 1 is set, the dry run feedrate can also be activated during program execution (in the part program block).

NOTICE!

After activating dry run feedrate, the axes are stopped for the duration of the reorganization process.

DRYRUN_MASK == 2

Dryrun can be switched on or off in every phase and the axes are not stopped.

NOTICE:
However, the function does not become active until a "later" block in the program execution and this is with the next (implicit) StopRe block.
Related to:
SD42100 $SC_DRY_RUN_FEED

10706	SLASH_MASK			N01	PG,A2
-	Activation of block skip			BYTE	PowerOn
-					
-	-	0	0	2	1/1

Description:

If SLASH_MASK = 0, skip block can only be activated when stopped at the end of the block
If SLASH_MASK = 1, skip block can also be activated during program execution.
NOTICE!
After activating skip block, the axes are stopped for the duration of the reorganization process.
If SLASH_MASK = 2 ,skip block can be activated in every phase.
Notice!
However, the function does not become active until a "later" block in the program execution, and this is with the next (implicit) StopRe block.

10707	PROG_TEST_MASK			N01	K1
-	Program test mode			DWORD	PowerOn
-					
-	-	1	0	1	1/1

Description:

Bit-coded mask for program test
Bit 0 == 1 Program test cannot be deselected in 'Stopped' program status.
Bits 1..31 Still unused.

10708	SERUPRO_MASK			N01	K1
-	Seach run modes			DWORD	PowerOn
-					
-	-	0	0	15	1/1

Description:

Bit-coded mask for block search via program test (abbr. SERUPRO).
SERUPRO block search is activated by the PI service _N_FINDBL mode paramter == 5.
SERUPRO means SEarchRUn by PROgram test, that is proceed under program test from start of program to search target. Note: Program test does not move any axis.
Bit 0 == 0
There is a stop at M0 during the search phase
Bit 0 == 1
There is no stop at M0 during the search phase
Bit 1 == 0
Alarm 16942 aborts the search phase upon the part programm command START.
Bit 1 == 1
Alarm 16942 is switched off.
NOTICE:
A start program command may really start the other channel!

Bit 2 == 0
Switches the function "Group Serupro" off
Bit 2 == 1
Switches the function "Group Serupro" on.
"Group-Serupro" enables a search routine in which the start part program command is changed into a search routine for the other channel.
Bit 3 == 0
Compels all channels that have started Serupro to end Serupro simultaneously unless they are aborted via Reset or the channel reaches M30 without finding the search taget. In other words, all channels that find the search target (including self-acting Serupro) terminate SERUPRO simultaneously.
Bit 3 == 1
Switches this function off
Bits 4 .. 31
Still unused.

10709	PROG_SD_POWERON_INIT_TAB			EXP, N01	K1
-	Setting data to be initialized			DWORD	PowerOn
-					
802d-cu3	30	43200,43202	-	-	2/2
802d-ng2	30	43200,43202	-	-	2/2
802d-ng3	30	43200,43202	-	-	2/2
802d-tm1	30	43200,43202	-	-	1/1
802d-tm2	30	43200,43202	-	-	2/2
802d-tm3	30	43200,43202	-	-	2/2

Description: Setting data to be initialized:
The values of the programmable SD indicated in this MD are set to their initial values on control power up.
Programmable setting data are:

	(GCODE)
SD42000 $SC_THREAD_START_ANGLE	SF
SD42010 $SC_THREAD_RAMP_DISP	DITS/DITE
SD42400 $SC_PUNCH_DWELLTIME	PDELAYON
SD42800 $SC_SPIND_ASSIGN_TAB	SETMS
SD43200 $SA_SPIND_S	S wih G94,G95,G97,G971,G972
SD43202 $SA_SPIND_CONSTCUT_S	S with G96,G961,G962
SD43210 $SA_SPIND_MIN_VELO_G25	G25 S
SD43220 $SA_SPIND_MAX_VELO_G26	G26 S
SD43230 $SA_SPIND_MAX_VELO_LIMS	LIMS
SD43300 $SA_ASSIGN_FEED_PER_REV_SOURCE	FPRAON
SD43420 $SA_WORKAREA_LIMIT_PLUS	G26
SD43430 $SA_WORKAREA_LIMIT_MINUS	G25
SD43700 $SA_OSCILL_REVERSE_POS1	OSP1
SD43710 $SA_OSCILL_REVERSE_POS2	OSP2
SD43720 $SA_OSCILL_DWELL_TIME1	OST1
SD43730 $SA_OSCILL_DWELL_TIME2	OST2
SD43740 $SA_OSCILL_VELO	FA
SD43750 $SA_OSCILL_NUM_SPARK_CYCLES	OSNSC
SD43760 $SA_OSCILL_END_POS	OSE
SD43770 $SA_OSCILL_CTRL_MASK	OSCTRL
SD43780 $SA_OSCILL_IS_ACTIVE	OS

10710	PROG_SD_RESET_SAVE_TAB			EXP, N01	A3, V1
-	Setting data to be updated			DWORD	PowerOn
-					
802d-cu3	30	0,0,0,

--> PROG_SD_RESET_SAVE_TAB[1] = 43430

See also: 'REDEF: change attributes of NC language elements', setting data/ PRLOC

10711	NC_LANGUAGE_CONFIGURATION			EXP, N01	K1
-	NC language commands of inactive options / functions			DWORD	PowerOn
-					
802d-cu3	-	0	0	4	0/0
802d-ng2	-	1	0	4	0/0
802d-ng3	-	1	0	4	0/0
802d-tm1	-	2	0	4	0/0
802d-tm2	-	1	0	4	0/0
802d-tm3	-	1	0	4	0/0

Description: Manner of handling language commands whose associated option or function has not been activated.

All programmable commands in an NC program or cycle program are language commands. Detailed information is available in the description of the language command STRINGIS.

ValueMeaning

0: All language commands are known - especially those whose function has not been activated. That means that all language commands are programmable. Whether the required function is active is not detected until execution. If not, then a specific alarm is generated.

Option approved / not approved (for functions without options "Option approved" applies implicitly):

1: All language commands are known. Language commands with options that have not been approved, are recognized at the beginning of the program interpretation and rejected with alarm 12553 "Option/function inactive".

Example:

If the option data for cylinder transformation has not been set, programming of TRACYL will be rejected with alarm 12553.

2: Only those language commands are known that correspond to the current scope of approved NCK software options. This means that options that are not approved are rejected with 12550 "Name not defined or option/function not available". In this case it is not possible to decide whether the relevant command is not known in Siemens NC language in general or whether it is simply not available on this system.

Example:

If the option data for cylinder transformation has not been set, programming of TRACYL will be rejected with alarm 12550.

Function active/inactive:

3: All language commands are known. Language commands with inactive functions are recognized at the beginning of the program interpretation and rejected with alarm 12553 "Option/function inactive".

Example:

If the option data for cylinder transformation has been set, but transformation has not been activated with MD24100 $MC_TRAFO_TYPE_1, programming of TRACYL will be rejected with alarm 12553.

4: Only those language commands are known that correspond to the current scope of active NCK software functions. This means that any command regarding inactive functions are rejected with alarm 12550 "Name not defined or option/ function not available". In this case it cannot be decided whether the relevant command is not known in the Siemens NC language in general or whether it is simply not available on this system.

Example:

If the option data for cylinder transformation has been set, but transformation has not been activated with MD24100 $MC_TRAFO_TYPE_1, programming of TRACYL will be rejected with alarm 12550.

Example:

See description for the STRINGIS language command.

10712	NC_USER_CODE_CONF_NAME_TAB			EXP, N01, N12	TE1,B1
-	List of reconfigured NC codes			STRING	PowerOn
-					
-	60	G58,G59,G505,G58,G506...	-	-	0/0

Description: List of identifiers of the NC codes reconfigured by the user.
The list is to be structured as follows:
Even address: Identifier to be changed
Subsequent odd address: New identifier
The following three types of NC codes can reconfigured:
1. G codes e.g.: G02, G64, ASPLINE...
2. NC addresses e.g.: RND, CHF, ...
3. Pre-defined subprograms e.g.: CONTPRON, ...

10713	M_NO_FCT_STOPRE			EXP, N12, N07	H2
-	M function with preprocessing stop			DWORD	PowerOn
-					
-	15	-1,-1,-1,-1,-1,-1,-1,-1,-1,-1,-1,-1,-1,-1,-1...	-	-	2/2

Description: The M functions defined by MD10713 $MN_M_NO_FCT_STOPRE perform an implicit preprocessing stop.
That is, the interpretation of the next part program line will be stopped until the block with the M function defined in that way has been processed completely
(PLC acknowledgement, motion, etc.).

10714	M_NO_FCT_EOP			EXP, N07	K1,H2
-	M function for spindle active after reset			DWORD	PowerOn
-					
-	-	-1	-	-	2/2

Description: For spindles where a '2' is configured in MD35040 $MA_SPIND_ACTIVE_AFTER_RESET, no spindle reset is enabled with this M function when the part program is terminated. The spindle therefore remains active after the end of the part program.
Proposal: M32
Restrictions: see MD10715 $MN_M_NO_FCT_CYCLE

Related to:
MD35040 $MA_SPIND_ACTIVE_AFTER_RESET
MD10714 $MN_M_NO_FCT_EOP,
MD10715 $MN_M_NO_FCT_CYCLE,
MD20094 $MC_SPIND_RIGID_TAPPING_M_NR,
MD22254 $MC_AUXFU_ASSOC_M0_VALUE
For external language mode:
MD10814 $MN_EXTERN_M_NO_MAC_CYCLE,
MD10804 $MN_EXTERN_M_NO_SET_INT
MD10806 $MN_EXTERN_M_NO_DISABLE_INT,
MD10800 $MN_EXTERN_CHAN_SYNC_M_NO_MIN,
MD10802 $MN_EXTERN_CHAN_SYNC_M_NO_MAX
MD20095 $MC_EXTERN_RIGID_TAPPING_M_NR
For nibbling:
MD26008 $MC_NIBBLE_PUNCH_CODE

10715	M_NO_FCT_CYCLE			EXP, N12, N07	H2,K1
-	M function to be replaced by a subroutine			DWORD	PowerOn
-					
-	10	-1,-1,-1,-1,-1,-1,-1,-1,-1,-1	-	-	2/2

Description: M number with which a subprogram is called.
The name of the subprogram is stated in MD10716 $MN_M_NO_FCT_CYCLE_NAME[n]. If the M function defined with MD10715 $MN_M_NO_FCT_CYCLE[n] is programmed in a part program block, the subprogram defined in MD10716 $MNM_NO_FCT_CYCLE_NAME[n] is started at the end of the block. If the M function is programmed again in the subprogram, there is no longer substitution by a subprogram call. MD10715 $MN_M_NO_FCT_CYCLE[n] acts both in Siemens mode G290 and in external language mode G291.
The subprograms configured with MD10716 $MN_M_NO_FCT_CYCLE_NAME[n] and MD10717 $MN_T_NO_FCT_CYCLE_NAME must not be active simultaneously in one block (line of a part program). This means that no more than one M/T function replacement can be active in any one block. Neither an M98 nor a modal subprogram call can be programmed in a block with the M function replacement. Subprogram return and end of part program are also not permitted. Alarm 14016 is output in the event of a conflict.
Restrictions:
M functions with a fixed meaning and configurable M functions are checked for conflicting settings. A conflict is reported with an alarm.
The following M functions are checked:

- M0 to M5,
- M17, M30,
- M19,
- M40 to M45,
- M function for spindle/axis mode switchover according to MD20094 $MC_SPIND_RIGID_TAPPING_M_NR (default: M70),
- M functions for nibbling/punching as configured in MD26008 $MC_NIBBLE_PUNCH_CODE if activated by MD26012 $MC_PUNCHNIB_ACTIVATION.
- M19, M96-M99 for applied external language (MD18800 $MN_MM_EXTERN_LANGUAGE).

Exception: The M function for the tool change defined by MD22560 $MC_TOOL_CHANGE_M_CODE.

10716	M_NO_FCT_CYCLE_NAME			EXP, N12, N07	K1
-	Subroutine name for M function replacement			STRING	PowerOn
-					
-	10		-	-	2/2

Description: The machine data contains the name of the cycle. This cycle is called if the M function has been programmed from MD10715 $MN_M_NO_FCT_CYCLE.
If the M function is programmed in a motion block, the cycle is executed after the motion.
MD10715 $MN_M_NO_FCT_CYCLE is active in both Siemens mode G290 and in external language mode G291.
If a T number is programmed in the call block, then the programmed T number can be polled in the cycle under the variable $P_TOOL.
M and T function replacements must not be programmed simultaneously in one block. This means that not more than one M or T function replacement may be active in any one block.
Neither an M98 nor a modal subprogram call may be programmed in a block with M function replacement.
Moreover, neither subprogram return nor part program end are allowed.
Alarm 14016 is issued if there is a conflict.
Related to:
MD10715 $MN_M_NO_FCT_CYCLE,
MD10717 $MN_T_NO_FCT_CYCLE_NAME

10717	T_NO_FCT_CYCLE_NAME			EXP, N12, N07	K1
-	Name of tool-changing cycle for T function replacement			STRING	PowerOn
-					
-	-		-	-	2/2

Description: Cycle name for tool change routine on call-up with a T function.
If a T function is programmed in a part program block, the subprogram defined in T_NO_FCT_CYCLE_NAME is called at the end of the block.
The T number programmed can be polled in the cycle via system variables $C_T / $C_T_PROG as a decimal value and via $C_TS / $C_TS_PROG as a string (only with tool management). MD10717 $MN_T_NO_FCT_CYCLE_NAME is active both in Siemens mode G290 and in external language mode G291.
MD10716 $MN_M_NO_FCT_CYCLE_NAME and MD10717 $MN_T_NO_FCT_CYCLE_NAME must not be active in one block at the same time, i.e. no more than one M/T function replacement can be active per block. Neither an M98 nor a modal subprogram call can be programmed in a block with a T function replacement. Furthermore, neither subprogram return nor part program end are allowed.
Alarm 14016 is output in the event of a conflict.
Related to:
MD10715 $MN_M_NO_FCT_CYCLE,
MD10716 $MN_M_NO_FCT_CYCLE_NAME

10718	M_NO_FCT_CYCLE_PAR			EXP, N12, N07	K1
-	M function replacement with parameters			DWORD	PowerOn
-					
-	-	-1	-	-	2/2

Description: If an M function replacement was configured with MD10715 $MN_M_NO_FCT_CYCLE[n] / MD10716 $MN_M_NO_FCT_CYCLE_NAME[n], a parameter transfer via system variable can be specified for one of these M functions using MD10718 $MN_M_NO_FCT_CYCLE_PAR, in the same way as T function replacement. The parameters stored in the system variables always refer to the part program line where the M function to be replaced was programmed.
The following system variables are available:
$C_ME : Address extension of the replaced M function
$C_T_PROG : TRUE if address T was programmed
$C_T : Value of address T (Integer)
$C_TE : Address extension of address T
$C_TS_PROG : TRUE if address TS was programmed
$C_TS : Value of address TS (string, only with tool management)
$C_D_PROG : TRUE if address D was programmed
$C_D : Value of address D
$C_DL_PROG : TRUE if address DL was programmed
$C_DL : Value of address DL

10719	T_NO_FCT_CYCLE_MODE			EXP, N12, N07	K1
-	Setting of T function substitution			DWORD	PowerOn
-					
-	-	0	0	7	2/2

Description: This machine data parameterizes the execution of the replacement subprogram for the tool and tool offset selection.
Bit 0 = 0:
D or DL number is transferred to the replacement subprogram (default value)
Bit 0 = 1:
The D or DL number is not transferred to the replacement subprogram if the following conditions are fulfilled: $MC_TOOL_CHANGE_MODE = 1 Programming D/DL with T or M function with which the tool change cycle is called, in a part program line.
Bit 1 = 0
Execution of the replacement subprogram at end of block (default value)
Bit 1 = 1
Execution of the replacement subprogram at block start
Bit 2 = 0:
Execution of the replacement subprogram according to the settin of bit 1
Bit 2 = 1:
Execution of the replacement subprogram at block start and at end of block.

10720	OPERATING_MODE_DEFAULT			N01	H2
-	Setting of mode after power ON			BYTE	PowerOn
-					
-	1	7,7,7,7,7,7,7,7,7,7	0	12	1/1

Description:

Default modes of the mode groups after power ON.
If no mode is selected by the PLC, all the channels associated with mode group n are in the mode preset by OPERATING_MODE_DEFAULT[n -1] after power ON:
0 = Automatic mode
1 = Automatic mode, submode REPOS
2 = MDI mode
3 = MDI mode, submode REPOS
4 = MDI mode, submode Teach In
5 = MDI mode, submode Reference point approach
6 = JOG mode
7 = JOG mode, submode Reference point approach
8 = AUTO mode, submode Teach In
9 = AUTO mode, submode Teach In, submode Reference point approach
10 = AUTO mode, submode Teach In, submode Repos
11 = MDI mode, submode Teach In, submode Reference point approach
12 = MDI mode, submode Teach In, submode Repos

10722	AXCHANGE_MASK			EXP, N01	K5
-	Paramameters for axis replacement behavior			DWORD	PowerOn
-					
-	-	0x08	0	0xFFFF	0/0

Description:

The axis replacement behavior can be changed with this machine data.
Bit0 = 1
Means that there is an automatic axis replacement via channels even if the axis has been brought into a neutral state by Waitp.
Bit1 = 1
Means that an AXCTSWE fetches all the axis container axes that can be assigned to the channel by means of implicit GET or GETD, and an axis replacement is not permitted again until after the axis container rotation.
Bit2 = 1
Means that, in the case of a GET, an intermediate block without preprocessing stop is generated, and whether a reorganization is needed is not checked until main run.
Bit3 = 1 means, that the NC carries out an axis replacement request for the VDI interface only for:
- an axis exclusively controlled by the PLC ($MA_BASE_FUNCTION_MASK Bit 4 == 1)
- a permanently assigned PLC axis ($MA_BASE_FUNCTION_MASK Bit 5 == 1)

For such axes, the VDI interface signal 'Axis replacement possible' is always 1.
For all other axes, the VDI interface signal 'Axis replacement possible' is always 0.
For permanently assigned PLC axes, an axis replacement is possible only from neutral axis to PLC axis or from PLC axis to neutral axis.

Bit3 = 0 means that an axis replacement can be requested by the PLC for each axis.
For permanently assigned PLC axes, an axis replacement is only possible from neutral axis to PLC axis
or from PLC axis to neutral axis.

10731	JOG_MODE_KEYS_EDGETRIGGRD			EXP, N01	IAF
-	Functioning of the JOG keys			BOOLEAN	PowerOn
-					
-	-	TRUE	-	-	0/0

Description: This data determines whether the signals of the VDI interface, which set the JOG mode (progressive INC10000, ... INC1), work as switches (level triggered) or as push buttons (edge triggered). In the latter case, a setting is made in the NCK to retain the function of the key last pressed.

10735	JOG_MODE_MASK			EXP, N01	K1
-	Settings for JOG mode			DWORD	PowerOn
-					
-	-	0	0	0xff	2/2

Description: Bit 0:

Enables JOG in automatic.

JOG is enabled in automatic when all channels in the mode group are in the RESET state and no channel of the DRF mode group has been selected. The mode group changes internally to JOG with the +/- key and the handwheel, and the axis moves. After the JOG motion has ended, a change back to AUTO is also made internally.

Bit 1:

Position with AxFrame.

The function 'JOG to position' considers all axial frames and, in the case of an axis configured as geometry axis, the tool length offset.

Bit 2:

Travel in opposite direction.

The functions 'JOG to position' and 'Approach machine fixed point manually' allow travel in opposite direction, i.e. away from the specified position.

Bit 3:

Tool radius offset.

MD21020 $MC_WORKAREA_WITH_TOOL_RADIUS is active with JOG motions of the geometry axes.

Bit 4:

Alarm suppression operating range limit in the basic coordinate system in JOG.

Alarms that would be output in JOG when an operating range limit is reached in the basic coordinate system, are suppressed.

Bit 5:

Alarm suppression operating range limit in the workpiece coordinate system in JOG.

Alarms that would be output in JOG when an operating range limit is reached in the workpiece coordinate system, are suppressed.

Bit 6, 7:

JOG of circles:

Bit 7 and bit 6 = 0: traversing the 2nd geometry axis of the active plane to PLUS for radius increase, traversing to MINUS for radius decrease independently of inner or outer machining being active.

Bit 7 = 1 and bit 6 = 0: traversing the 2nd geometry axis of the active plane to PLUS always travels in the direction of the limiting circle. This means that the radius is increased on inner machining and decreased on outer machining.

Bit 7 = 1 and bit 6 = 1: traversing the 2nd geometry axis of the active plane to MINUS always travels in the direction of the limiting circle. This means that the radius is increased on inner machining and decreased on outer machining.

Bits 8-31:

Currently unassigned.

10760	G53_TOOLCORR			N12	FBFA
-	Method of operation of G53, G153 and SUPA			DWORD	NEW CONF
-					
-	-	0	0	3	2/2

Description:

With this MD you define whether tool length offset and tool radius offset are also to be suppressed with language commands G53, G153 and SUPA

The machine data is bit-coded.

Bit 0 = 0: G53, G153 and SUPA cause block-by-block suppression of work offsets. The active tool length offset and tool radius offset remain active.

Bit 0 = 1: G53, G153 and SUPA cause block-by-block suppression of work offsets, active tool length offset and tool radius offset. The tool length behavior can be modified with bit 1.

Bit 1 is only evaluated, if the value of bit 0 is 1.

Bit1 = 0: with bit 0 set, the tool length is always suppressed with G53, G153 and SUPA.

Bit1 = 1: with bit 0 set the tool length is only suppressed with G53, G153 and SUPA, if a cutting edge is not selected in the same block (this can also be the cutting edge that is already active).

10780	UNLOCK_EDIT_MODESWITCH			EXP, N01	-
-	Cancel start disable when editing a part program			BOOLEAN	PowerOn
-					
-	-	TRUE	-	-	0/0

Description:

To avoid inconsistent states, a start disable is forced in Teach In mode when a part program is edited.

This start disable during editing can be canceled together with the operating algorithms of the individual MMCs by an NC reset or a mode group change.

0: Start disable when editing is also canceled with NC Reset

1: Start disable when editing is also canceled on a mode group change.

10800	EXTERN_CHAN_SYNC_M_NO_MIN			EXP, N12	H2
-	1st M function for channel synchronization			DWORD	PowerOn
-					
-	-	-1	-	-	0/0

Description: M number of the first M function which can be used to perform a channel (program) synchronization in ISO2/3 mode.
To avoid conflicts with standard M functions the lowest permissible value is 100. If you enter a value between 0 and 99, alarm 4170 will be issued.

10802	EXTERN_CHAN_SYNC_M_NO_MAX			EXP, N12	H2
-	Last M function for channel synchronization			DWORD	PowerOn
-					
-	-	-1	-	-	0/0

Description: M number of the last M function which can be used to perform a channel (program) synchronization in ISO2/3 mode.
In combination with MD10800 $MN_EXTERN_CHAN_SYNC_M_NO_MIN, the machine data defines an M number range reserved for channel synchronization. This range may be a maximum of 10 times the number of channels as only 10 WAIT marks may be set for each channel.
Alarm 4170 is output if a value is entered between 0 and 99 or less than MD10800 $MN_EXTERN_CHAN_SYNC_M_NO_MIN.

10804	EXTERN_M_NO_SET_INT			EXP, N12	H2,K1
-	M function to activate ASUB			DWORD	PowerOn
-					
802d-cu3	-	96	-	-	1/1
802d-ng2	-	96	-	-	-1/2
802d-ng3	-	96	-	-	-1/2
802d-tm1	-	96	-	-	1/1
802d-tm2	-	96	-	-	1/1
802d-tm3	-	96	-	-	1/1

Description: M function number used to activate an interrupt program (ASUB) in ISO2/3 mode. The interrupt program is always started by the 1st high-speed input of the numerical control.
The M number defined in the machine data replaces M96 in external language mode.
Restrictions: Refer to MD10715 $MN_M_NO_FCT_CYCLE
Related to:
MD10714 $MN_M_NO_FCT_EOP,
MD10715 $MN_M_NO_FCT_CYCLE,
MD20094 $MC_SPIND_RIGID_TAPPING_M_NR,
MD22254 $MC_AUXFU_ASSOC_M0_VALUE
For external language mode:
MD10814 $MN_EXTERN_M_NO_MAC_CYCLE,
MD10804 $MN_EXTERN_M_NO_SET_INT
MD10806 $MN_EXTERN_M_NO_DISABLE_INT,
MD10800 $MN_EXTERN_CHAN_SYNC_M_NO_MIN,
MD10802 $MN_EXTERN_CHAN_SYNC_M_NO_MAX
MD20095 $MC_EXTERN_RIGID_TAPPING_M_NR

For nibbling:
$MC_NIBBLE_PUNCH_CODE

10806	EXTERN_M_NO_DISABLE_INT			EXP, N12	H2,K1
-	M function to deactivate ASUB			DWORD	PowerOn
-					
802d-cu3	-	97	-	-	1/1
802d-ng2	-	97	-	-	-1/2
802d-ng3	-	97	-	-	-1/2
802d-tm1	-	97	-	-	1/1
802d-tm2	-	97	-	-	1/1
802d-tm3	-	97	-	-	1/1

Description: M function number used to deactivate an interrupt program (ASUB) in ISO2/3 mode.
The M number defined in the machine data replaces M97 in external language mode.
Restrictions: refer to MD10715 $MN_M_NO_FCT_CYCLE
MD10714 $MN_M_NO_FCT_EOP,
MD10715 $MN_M_NO_FCT_CYCLE,
MD20094 $MC_SPIND_RIGID_TAPPING_M_NR,
MD22254 $MC_AUXFU_ASSOC_M0_VALUE
For external language mode:
MD10814 $MN_EXTERN_M_NO_MAC_CYCLE,
MD10804 $MN_EXTERN_M_NO_SET_INT
MD10806 $MN_EXTERN_M_NO_DISABLE_INT,
MD10800 $MN_EXTERN_CHAN_SYNC_M_NO_MIN,
MD10802 $MN_EXTERN_CHAN_SYNC_M_NO_MAX
MD20095 $MC_EXTERN_RIGID_TAPPING_M_NR
For nibbling:
MD26008 $MC_NIBBLE_PUNCH_CODE

10808	EXTERN_INTERRUPT_BITS_M96			EXP, N12	FBFA
-	Activate interrupt program (ASUB)			DWORD	PowerOn
-					
802d-cu3	-	0	-	-	1/1
802d-ng2	-	0	-	-	-1/2
802d-ng3	-	0	-	-	-1/2
802d-tm1	-	0	-	-	1/1
802d-tm2	-	0	-	-	1/1
802d-tm3	-	0	-	-	1/1

Description: Setting the various bits can influence the processing of the interrupt routine activated by M96 P...
Bit 0 = 0,
No interrupt program possible, M96/M97 are normal M functions
Bit 0 = 1,
Using M96/M97 to activate an interrupt program is allowed

Bit 1 = 0,
Continue processing part program at the final position of the next block after the interrupt block
Bit 1 = 1,
Continue processing part program from interrupt position
Bit 2 = 0,
The interrupt signal immediately interrupts the current block and starts the interrupt routine
Bit 2 = 1,
The interrupt routine will not be started until the end of the block
Bit 3 = 0,
Interrupt machining cycle at an interupt signal
Bit 3 = 1,
Do not start interrupt program until the end of a machining cycle.

10810	EXTERN_MEAS_G31_P_SIGNAL			EXP, N12	FBFA
-	Config. of measuring inputs for G31 P..			BYTE	PowerOn
-					
802d-cu3	4	1,1,1,1	0	3	2/2
802d-ng2	4	1,1,1,1	0	3	-1/2
802d-ng3	4	1,1,1,1	0	3	-1/2
802d-tm1	4	1,1,1,1	0	3	2/2
802d-tm2	4	1,1,1,1	0	3	2/2
802d-tm3	4	1,1,1,1	0	3	2/2

Description: This machine data defines the assignment of measurement inputs 1 and 2 to the P numbers programmed with G31 P1 (- P4). The machine data is bit-coded. Only bits 0 and 1 are evaluated. For example, if bit 0 = 1 in MD10810 $MN_EXTERN_MEAS_G31_P_SIGNAL[1], the 1st measurement input is activated with G31 P2. If MD10810 $MN_EXTERN_MEAS_G31_P_SIGNAL[3]=2, the 2nd measurement input is activated with G31 P4.
Bit 0: = 0, Do not evaluate measurement input 1 with G31 P1 (- P4)
Bit 0: = 1, Activate measurement input 1 with G31 P1 (- P4)
Bit 1: = 0, Do not evaluate measurement input 2 with G31 P1 (- P4)
Bit 1: = 1, Activate measurement input 2 with G31 P1 (- P4)

10812	EXTERN_DOUBLE_TURRET_ON			EXP, N12	FBFA
-	Double turret with G68			BOOLEAN	PowerOn
-					
802d-cu3	-	FALSE	-	-	2/2
802d-ng2	-	FALSE	-	-	-1/2
802d-ng3	-	FALSE	-	-	-1/2
802d-tm1	-	FALSE	-	-	2/2
802d-tm2	-	FALSE	-	-	2/2
802d-tm3	-	FALSE	-	-	2/2

Description: This machine data is used to determine whether double-slide machining (channel synchronization for 1st and 2nd channel) is to be started using G68 or whether the second tool of a double turret (= two closely-linked tools at a distance defined in the MD42162 SC_EXTERN_DOUBLE_TURRET_DIST) is to be activated.
FALSE:
Channel synchronization for double-slide machining

TRUE:
Load 2nd tool of a double turret (that is, activate $SC_EXTERN_DOUBLE_TURRET_DISTANCE as additive zero offset and mirroring around Z axis)

10814	EXTERN_M_NO_MAC_CYCLE			EXP, N12	H2,K1
-	Macro call via M function			DWORD	PowerOn
-					
802d-cu3	10	-1,-1,-1,-1,-1,-1,-1,-1,-1,-1	-	-	2/2
802d-ng2	10	-1,-1,-1,-1,-1,-1,-1,-1,-1,-1	-	-	-1/2
802d-ng3	10	-1,-1,-1,-1,-1,-1,-1,-1,-1,-1	-	-	-1/2
802d-tm1	10	-1,-1,-1,-1,-1,-1,-1,-1,-1,-1	-	-	2/2
802d-tm2	10	-1,-1,-1,-1,-1,-1,-1,-1,-1,-1	-	-	2/2
802d-tm3	10	-1,-1,-1,-1,-1,-1,-1,-1,-1,-1	-	-	2/2

Description: A macro is called with this M number.
The name of the subprogram is stated in MD10815 $MN_EXTERN_M_NO_MAC_CYCLE_NAME[n].
If the M function specified with MD10814 $MN_EXTERN_M_NO_MAC_CYCLE[n] is programmed in a part program block, the subprogram defined in MD10815 $MN_EXTERN_M_NO_MAC_CYCLE_NAME[n] is started. All addresses programmed in the block are written into the corresponding variables.
If the M function is programmed again in the subprogram, there is no longer a replacement by a subprogram call.
MD10814 $MN_EXTERN_M_NO_MAC_CYCLE[n] is only active in the external language mode G291.
The subprograms configured with MD10815 $MN_EXTERN_M_NO_MAC_CYCLE_NAME[n] must not be active simultaneously in a block (part program line), i.e. only one M function replacement can become active in any one block. Neither an M98 nor a modal subprogram call may be programmed in the block with the M function replacement.
Subprogram return and the part program end are also not permitted. Alarm 14016 is issued in case of a conflict. Restrictions: see MD10715 $MN_M_NO_FCT_CYCLE
Related to:
MD10714 $MN_M_NO_FCT_EOP,
MD10715 $MN_M_NO_FCT_CYCLE,
MD20094 $MC_SPIND_RIGID_TAPPING_M_NR,
MD22254 $MC_AUXFU_ASSOC_M0_VALUE
For external language mode:
MD10814 $MN_EXTERN_M_NO_MAC_CYCLE,
MD10804 $MN_EXTERN_M_NO_SET_INT
MD10806 $MN_EXTERN_M_NO_DISABLE_INT,
MD10800 $MN_EXTERN_CHAN_SYNC_M_NO_MIN,
MD10802 $MN_EXTERN_CHAN_SYNC_M_NO_MAX
MD20095 $MC_EXTERN_RIGID_TAPPING_M_NR
For nibbling:
MD26008 $MC_NIBBLE_PUNCH_CODE

10815	EXTERN_M_NO_MAC_CYCLE_NAME			EXP, N12	H2
-	Name of subroutine for M function macro call			STRING	PowerOn
-					
802d-cu3	10		-	-	2/2
802d-ng2	10		-	-	-1/2
802d-ng3	10		-	-	-1/2
802d-tm1	10		-	-	2/2
802d-tm2	10		-	-	2/2
802d-tm3	10		-	-	2/2

Description: Name of the subprogram started by a call via the M function defined by MD10814 $MN_EXTERN_M_NO_MAC_CYCLE[n].

10816	EXTERN_G_NO_MAC_CYCLE			EXP, N12	FBFA
-	Macro call via G function			DOUBLE	PowerOn
-					
802d-cu3	50	-1.,-1.,-1.,-1.,-1.,-1.,-1.,-1.,-1....	-	-	2/2
802d-ng2	50	-1.,-1.,-1.,-1.,-1.,-1.,-1.,-1.,-1....	-	-	-1/2
802d-ng3	50	-1.,-1.,-1.,-1.,-1.,-1.,-1.,-1.,-1....	-	-	-1/2
802d-tm1	50	-1.,-1.,-1.,-1.,-1.,-1.,-1.,-1.,-1....	-	-	2/2
802d-tm2	50	-1.,-1.,-1.,-1.,-1.,-1.,-1.,-1.,-1....	-	-	2/2
802d-tm3	50	-1.,-1.,-1.,-1.,-1.,-1.,-1.,-1.,-1....	-	-	2/2

Description: G number for calling a macro.
The name of the subprogram is stated in MD10817 $MN_EXTERN_G_NO_MAC_CYCLE_NAME[n].
If the G function specified with MD10816 $MN_EXTERN_G_NO_MAC_CYCLE[n] is programmed in a part program block, the subprogram defined in MD10817 $MN_EXTERN_M_NO_MAC_CYCLE_NAME[n] is started. All addresses programmed in the block are written in the corresponding $C_xx variables.
No subprogram call is executed if a subprogram call is already active via an M/G macro or an M replacement. If a standard G function is programmed in this case, this code is executed. Otherwise, alarm 12470 is issued.
MD10816 $MN_EXTERN_G_NO_MAC_CYCLE[n] is only active in the external language mode G291.
Only a single subprogram call may be included in any one block. This means that only a single M/G function replacement may be programmed in a block, and no additional subprogram (M98) or cycle call may be included in the block.
Furthermore, a subprogram return and a part program end are not permitted in the same block.
Alarm 14016 is issued in case of a conflict.

10817	EXTERN_G_NO_MAC_CYCLE_NAME			EXP, N12	FBFA
-	Name of subroutine for G function macro call			STRING	PowerOn
-					
802d-cu3	50		-	-	2/2
802d-ng2	50		-	-	-1/2
802d-ng3	50		-	-	-1/2
802d-tm1	50		-	-	2/2
802d-tm2	50		-	-	2/2
802d-tm3	50		-	-	2/2

Description: Name of the subprogram started by call via the G function defined by MD10816 $MN_EXTERN_G_NO_MAC_CYCLE[n].

10818	EXTERN_INTERRUPT_NUM_ASUP			EXP, N12	FBFA
-	Interrupt number for ASUB start (M96)			BYTE	PowerOn
-					
802d-cu3	-	1	1	8	1/1
802d-ng2	-	1	1	8	-1/2
802d-ng3	-	1	1	8	-1/2
802d-tm1	-	1	1	8	1/1
802d-tm2	-	1	1	8	1/1
802d-tm3	-	1	1	8	1/1

Description: Number of the interrupt input starting an asynchronous subprogram activated in ISO mode. (M96 <program number>)

10820	EXTERN_INTERRUPT_NUM_RETRAC			EXP, N12	FBFA
-	Interrupt number for rapid retraction (G10.6)			BYTE	PowerOn
-					
802d-cu3	-	2	1	8	2/2
802d-ng2	-	2	1	8	-1/2
802d-ng3	-	2	1	8	-1/2
802d-tm1	-	2	1	8	2/2
802d-tm2	-	2	1	8	2/2
802d-tm3	-	2	1	8	2/2

Description: Number of the interrupt input triggering rapid retraction to the position programmed with G10.6 in ISO mode.

10880	MM_EXTERN_CNC_SYSTEM			N01, N12	FBFA
-	Definition of the control system to be adapted			DWORD	PowerOn
-					
802d-cu3	-	1	1	5	2/2
802d-ng2	-	1	1	5	-1/2
802d-ng3	-	1	1	5	-1/2
802d-tm1	-	1	1	5	2/2
802d-tm2	-	1	1	5	2/2
802d-tm3	-	1	1	5	2/2

Description: Definition of the external CNC system whose part programs are to be executed on the SINUMERIK control in addition to SINUMERIK code (ISO_1):
1: ISO_21: System Fanuc0 milling (5.1 and higher)

2: ISO_31: System Fanuc0 turning (P5.2 and higher)
3: External language via OEM application (P6.2 and higher)
4: ISO_22: System Fanuc0 Milling (P7 and higher)
5: ISO_32: System Fanuc0 Turning (P7 and higher)

10881	MM_EXTERN_GCODE_SYSTEM			N01, N12	FBFA
-	ISO_3 Mode: GCodeSystem			DWORD	PowerOn
-					
802d-cu3	-	0	0	2	2/2
802d-ng2	-	0	0	2	-1/2
802d-ng3	-	0	0	2	-1/2
802d-tm1	-	0	0	2	2/2
802d-tm2	-	0	0	2	2/2
802d-tm3	-	0	0	2	2/2

Description: Definition of the GCodeSystem to be actively executed in ISO_3 Mod (turning):
Value = 0 : ISO_3: Code system B
Value = 1 : ISO_3: Code system A
Value = 2 : ISO_3: Code system C

10882	NC_USER_EXTERN_GCODES_TAB			N12	FBFA
-	List of user-specific G commands of an external NC language			STRING	PowerOn
-					
802d-cu3	60		-	-	2/2
802d-ng2	60		-	-	-1/2
802d-ng3	60		-	-	-1/2
802d-tm1	60		-	-	2/2
802d-tm2	60		-	-	2/2
802d-tm3	60		-	-	2/2

Description: List of G commands of external NC languages which have been reconfigured by the user.
The implemented G commands are to be taken from the current Siemens documentation for this programming language.
The list is structured as follows:
Even address: G command to be changed
Subsequent odd address: New G command
Only G codes can be reconfigured, e.g.: G20, G71.

10884	EXTERN_FLOATINGPOINT_PROG			N12	FBFA
-	Evaluation of programmed values without decimal point			BOOLEAN	PowerOn
-					
802d-cu3	-	TRUE	-	-	2/2
802d-ng2	-	TRUE	-	-	-1/2
802d-ng3	-	TRUE	-	-	-1/2
802d-tm1	-	TRUE	-	-	2/2
802d-tm2	-	TRUE	-	-	2/2
802d-tm3	-	TRUE	-	-	2/2

Description: This MD defines how programmed values without a decimal point are evaluated:
0: Values without a decimal point are interpreted in internal units. For example, X1000 = 1 mm (for 0.001 mm input resolution) X1000.0 = 1000 mm

1: Values without decimal point are interpreted as mm, inch or degrees. For example, X1000 = 1000 mm X1000.0 = 1000 mm
Related to:
MD10886 $MN_EXTERN_INCREMENT_SYSTEM

10886	EXTERN_INCREMENT_SYSTEM			N12	FBFA
-	Incremental system in external language mode			BOOLEAN	PowerOn
-					
802d-cu3	-	FALSE	-	-	2/2
802d-ng2	-	FALSE	-	-	-1/2
802d-ng3	-	FALSE	-	-	-1/2
802d-tm1	-	FALSE	-	-	2/2
802d-tm2	-	FALSE	-	-	2/2
802d-tm3	-	FALSE	-	-	2/2

Description: This machine data is active for external programming languages, that is if MD18800 $MN_MM_EXTERN_LANGUAGE = 1.
This machine data specifies which incremental system is active:
0: Incremental system IS-B = 0.001 mm/degree
= 0.0001 inch
1: Incremental system IS-C = 0.0001 mm/degree
= 0.00001 inch
Related to:
MD10884 $MN_EXTERN_FLOATINGPOINT_PROG

10888	EXTERN_DIGITS_TOOL_NO			N12	FBFA
-	Digits for T number in ISO mode			BYTE	PowerOn
-					
802d-cu3	-	2	0	8	2/2
802d-ng2	-	2	0	8	-1/2
802d-ng3	-	2	0	8	-1/2
802d-tm1	-	2	0	8	2/2
802d-tm2	-	2	0	8	2/2
802d-tm3	-	2	0	8	2/2

Description: This machine data is only active when MD10880 $MN_MM_EXTERN_CNC_SYSTEM == 2.
Number of digits of the tool number in the programmed T word.
From the programmed T word, the number of leading digits specified in MD10888 $MN_EXTERN_DIGITS_TOOL_NO are interpreted as the tool number.
The following digits address the offset memory.

10890	EXTERN_TOOLPROG_MODE			N12	FBFA
-	Tool change programming for external language			DWORD	PowerOn
-					
802d-cu3	-	0x0	-	-	2/2
802d-ng2	-	0x0	-	-	-1/2
802d-ng3	-	0x0	-	-	-1/2
802d-tm1	-	0x0	-	-	2/2
802d-tm2	-	0x0	-	-	2/2
802d-tm3	-	0x0	-	-	2/2

Description: Configuration for programming the tool change in an external programming language:

Bit0=0:

Only active if MD10880 $MN_MM_EXTERN_CNC_SYSTEM =2: The tool number and offset number are programmed in the T word. $MN_DIGITS_TOOLNO defines the number of leading digits that form the tool number.

Example:

```
$MN_DIGITS_TOOLNO = 2
T=1234    ; Tool number 12,
          ; Offset number 34
```

Bit0=1:

Only active if MD10880 $MN_MM_EXTERN_CNC_SYSTEM =2: Only the tool number is programmed in the T word. Offset number = Tool number. $MN_DIGITS_TOOLNO is irrelevant.

Example:

```
T=12      ; Tool number 12
          ; Offset number 12
```

Bit1=0:

Only active if MD10880 $MN_MM_EXTERN_CNC_SYSTEM =2: A leading 0 is added if the number of digits programmed in the T word is the same as that in MD10888 $MN_EXTERN_DIGITS_TOOL_NO.

Bit1=1:

Only active if MD10880 $MN_MM_EXTERN_CNC_SYSTEM =2: If the number of digits programmed in the T word is equal to the number of digits defined in MD10888 $MN_EXTERN_DIGITS_TOOL_NO, the programmed number is both the offset number and the tool number

Bit2=0:

Only active if $MN_MM_EXTERN_CNC_LANGUAGE =2: ISO T offset selection only with D (Siemens cutting edge number)

Bit2=1:

Only active if $MN_MM_EXTERN_CNC_LANGUAGE =2: ISO T offset selection only with H ($TC_DPH[t,d])

Bit6=0:

The offset memories for the tool length and tool radius are linked so that tool length and tool radius are always selected when either H or D is programmed.

Bit6=1:

The offset memories for the tool length and tool radius are not linked, so that the number of the tool length value is selected when H is programmed, and the number of the tool radius value is selected when D is programmed.

10900	INDEX_AX_LENGTH_POS_TAB_1			N09	T1
-	Number of positions for indexing axis table 1			DWORD	Reset
-					
802d-cu3	-	0	0	60	2/2
802d-ng2	-	0	0	60	2/2
802d-ng3	-	0	0	60	2/2
802d-tm1	-	0	0	60	0/0
802d-tm2	-	0	0	60	2/2
802d-tm3	-	0	0	60	2/2

Description: The indexing position table is used to assign the axis positions in the valid unit of measurement (mm, inches or degrees) to the indexing positions [n] on the indexing axis. The number of indexing positions used in table 1 is defined by MD10900 $MN_INDEX_AX_LENGTH_POS_TAB_1.
These indexing positions must be assigned valid values in table 1. Any indexing positions in the table above the number specified in the machine data are ignored. Up to 60 indexing positions (0 to 59) can be entered in the table.
Table length = 0 means that the table is not evaluated. If the length is not equal to 0, then the table must be assigned to an axis with MD30500 $MA_INDEX_AX_ASSIGN_POS_TAB.
If the indexing axis is defined as a rotary axis (MD30300 $MA_IS_ROT_AX = "1") with modulo 360° (MD30310 $MA_ROT_IS_MODULO = "1"), the machine data defines the last indexing position after which, with a further traversing movement in the positive direction, the indexing positions begin again at 1.
Special cases:

Alarm 17090 "Value violates upper limit" if values over 60 are entered in MD10900 $MN_INDEX_AX_LENGTH_POS_TAB_1.

Related to:

MD30500 $MA_INDEX_AX_ASSIGN_POS_TAB (axis is an indexing axis)
MD10910 $MN_INDEX_AX_POS_TAB_1 (indexing position table 1)
MD30300 $MA_IS_ROT_AX(rotary axis)
MD30310 $MA_ROT_IS_MODULO (modulo conversion for rotary axis)

10910	INDEX_AX_POS_TAB_1			N09	T1
mm/inch, degrees	Indexing position table 1			DOUBLE	Reset
-					
802d-cu3	60	0.,0.,0.,0.,0.,0.,0.,0.,0.,0.,0.,0.,0.,0.,0.,0....	-	-	2/2
802d-ng2	60	0.,0.,0.,0.,0.,0.,0.,0.,0.,0.,0.,0.,0.,0.,0.,0....	-	-	2/2
802d-ng3	60	0.,0.,0.,0.,0.,0.,0.,0.,0.,0.,0.,0.,0.,0.,0.,0....	-	-	2/2
802d-tm1	1	0.,0.,0.,0.,0.,0.,0.,0.,0.,0.,0.,0.,0.,0.,0.,0....	-	-	0/0
802d-tm2	60	0.,0.,0.,0.,0.,0.,0.,0.,0.,0.,0.,0.,0.,0.,0.,0....	-	-	2/2
802d-tm3	60	0.,0.,0.,0.,0.,0.,0.,0.,0.,0.,0.,0.,0.,0.,0.,0....	-	-	2/2

Description: The indexing position table is used to assign the axis positions in the valid unit of measurement (mm, inches or degrees) to the indexing positions [n] on the indexing axis.

[n] = indexing for the entry of the indexing positions in the indexing position table.
Range: 0 y n x 59, where 0 corresponds to the 1st indexing position and 59 to the 60th indexing position.
Note.
Programming with the absolute indexing position (e.g. CAC) starts with indexing position 1. This corresponds to the indexing position with indexing n = 0 in the indexing position table.
The following should be noted when entering the indexing positions:
- Up to 60 different indexing positions can be stored in the table.
- The 1st entry in the table corresponds to indexing position 1; the nth entry corresponds to indexing position n.
- The indexing positions must be entered in the table in ascending order (starting with the negative and going to the positive traversing range) with no gaps between the entries. Consecutive position values must not be identical.
- If the indexing axis is defined as a rotary axis (MD30300 $MA_IS_ROT_AX = "1") with modulo 360° (MD30310 $MA_ROT_IS_MODULO = "1"), then the position values are limited to a range of 0° x pos. < 360°.

The number of indexing positions used in the table is defined by MD10900 $MN_INDEX_AX_LENGTH_POS_TAB_1.
Entering the value 1 in axial MD30500 $MA_INDEX_AX_ASSIGN_POS_TAB assigns indexing position table 1 to the current axis.
Special cases:
Alarm 17020 "Illegal array index" if over 60 positions are entered in the table.
Related to:
MD30500 $MA_INDEX_AX_ASSIGN_POS_TAB (axis is an indexing axis)
MD10900 $MN_INDEX_AX_LENGTH_POS_TAB_1 (number of indexing positions used in table 1)
MD30300 $MA_IS_ROT_AX(rotary axis)
MD30310 $MA_ROT_IS_MODULO (modulo conversion for rotary axis)

10920	INDEX_AX_LENGTH_POS_TAB_2			N09	T1
-	Number of positions for indexing axis table 2			DWORD	Reset
-					
802d-cu3	-	0	0	60	2/2
802d-ng2	-	0	0	60	2/2
802d-ng3	-	0	0	60	2/2
802d-tm1	-	0	0	60	0/0
802d-tm2	-	0	0	60	2/2
802d-tm3	-	0	0	60	2/2

Description: The indexing position table is used to assign the axis positions in the valid unit of measurement (mm, inches or degrees) to the indexing positions [n] on the indexing axis. The number of indexing positions used in table 2 is defined by MD10920 $MN_INDEX_AX_LENGTH_POS_TAB_2.
These indexing positions in table 2 must be assigned valid values. Any indexing positions in the table above the number specified in the machine data are ignored.
Up to 60 indexing positions (0 to 59) can be entered in the table.
Table length = 0 means that the table is not evaluated. If the length is not equal to 0, the table must be assigned to an axis with MD30500 $MA_INDEX_AX_ASSIGN_POS_TAB.

If the indexing axis is defined as a rotary axis (MD30300 $MA_IS_ROT_AX = "1") with modulo 360° (MD30310 $MA_ROT_IS_MODULO = "1"), the machine data defines the last indexing position after which, with a further traversing movement in the positive direction, the indexing positions begin again at 1.
Not relevant for tool magazines (revolvers, chain magazines)
Special cases:

Alarm 17090 "Value violates upper limit" if a value over 60 is entered in MD10920 $MN_INDEX_AX_LENGTH_POS_TAB_2.

Related to:

MD30500 $MA_INDEX_AX_ASSIGN_POS_TAB (axis is an indexing axis)
MD10930 $MN_INDEX_AX_POS_TAB_2 (indexing position table 2)
MD30300 $MA_IS_ROT_AX(rotary axis)
MD30310 $MA_ROT_IS_MODULO (modulo conversion for rotary axis)

10930	INDEX_AX_POS_TAB_2			N09	T1
mm/inch, degrees	Indexing position table 2			DOUBLE	Reset
-					
802d-cu3	60	0.,0.,0.,0.,0.,0.,0.,0., 0.,0.,0.,0....	-	-	2/2
802d-ng2	60	0.,0.,0.,0.,0.,0.,0.,0., 0.,0.,0.,0....	-	-	2/2
802d-ng3	60	0.,0.,0.,0.,0.,0.,0.,0., 0.,0.,0.,0....	-	-	2/2
802d-tm1	1	0.,0.,0.,0.,0.,0.,0.,0., 0.,0.,0.,0....	-	-	0/0
802d-tm2	60	0.,0.,0.,0.,0.,0.,0.,0., 0.,0.,0.,0....	-	-	2/2
802d-tm3	60	0.,0.,0.,0.,0.,0.,0.,0., 0.,0.,0.,0....	-	-	2/2

Description:

The indexing position table is used to assign the axis positions in the valid unit of measurement (mm, inches or degrees) to the indexing positions [n] on the indexing axis.
[n] = indexing for the entry of the indexing positions in the indexing position table.
Range: 0 y n x 59, where 0 corresponds to the 1st indexing position and 59 to the 60th indexing position.
Note:

Programming with the absolute indexing position (e.g. CAC) starts with indexing position 1. This corresponds to the indexing position with indexing n = 0 in the table.

The following should be noted when entering the indexing positions:

- Up to 60 different indexing positions can be stored in the table.
- The 1st entry in the table corresponds to indexing position 1; the nth entry corresponds to indexing position n.
- The indexing positions should be entered in the table in ascending order (starting with the negative and going to the positive traversing range) with no gaps between the entries. Consecutive position values must not be identical.
- If the indexing axis is defined as a rotary axis (MD30300 $MA_IS_ROT_AX = "1") with modulo 360° (MD30310 $MA_ROT_IS_MODULO = "1"), then the position values are limited to a range of 0° x pos. < 360°.

The number of indexing positions used in the table is defined by MD10920 $MN_INDEX_AX_LENGTH_POS_TAB_2.
Entering the value 1 in axial MD30500 $MA_INDEX_AX_ASSIGN_POS_TAB assigns indexing position table 1 to the current axis.
Special cases:

Alarm 17020 "Illegal array index" if over 60 positions are entered in the table.

Related to:

MD30500 $MA_INDEX_AX_ASSIGN_POS_TAB (axis is an indexing axis)
MD10920 $MN_INDEX_AX_LENGTH_POS_TAB_2 (num ber of indexing positions used in table 2)
MD30300 $MA_IS_ROT_AX(rotary axis)
MD30310 $MA_ROT_IS_MODULO (modulo conversion for rotary axis)

10940	INDEX_AX_MODE			EXP	T1
-	Settings for indexing position			DWORD	PowerOn
-					
802d-cu3	-	1	0	1	1/1
802d-ng2	-	1	0	1	1/1
802d-ng3	-	1	0	1	1/1
802d-tm1	-	1	0	1	0/0
802d-tm2	-	1	0	1	1/1
802d-tm3	-	1	0	1	1/1

Description: Affects the display of indexing positions (AA_ACT_INDEX_AX_POS_NO and aaActIndexAxPosNo).
Bit 0 = 0:

Indexing position display changes on reaching/passing the indexing position (indexing range lies between the indexing positions, compatible behavior).

Bit 0 = 1:

Indexing position display changes on passing the half indexing axis position (indexing range lies quasi symmetrically round the indexing position)

11100	AUXFU_MAXNUM_GROUP_ASSIGN			N01, N07, N02	H2
-	Number of auxiliary functions distr. amongst aux. fct. groups			DWORD	PowerOn
-					
-	-	1	1	255	2/2

Description: The maximum number of auxiliary functions that can be assigned to a group by
AUXFU_ASSIGN_TYPE,
AUXFU_ASSIGN_EXTENTION,
AUXFU_ASSIGN_VALUE and
AUXFU_ASSIGN_GROUP.
This number includes only the user-defined auxiliary functions, not the predefined auxiliary functions.
Related to:

MD22010 $MC_AUXFU_ASSIGN_TYPE[n].

11110	AUXFU_GROUP_SPEC			N07	H2
-	Auxiliary function group specification			DWORD	PowerOn
-					
-	128	0x81,0x21,0x41,0x41, 0x41,0x41,0x41,0x41...	-	-	1/1

Description: Defines the output options for the auxiliary functions belonging to a group.
However, the output option of an auxiliary function configured by MD22080 $MC_AUXFU_PREDEF_SPEC[preIndex] or MD22035 $MC_AUXFU_ASSIGN_SPEC[auxIndex] has a higher priority.
Bit 0=1"Normal" acknowledgement after an OB1 cycle
Bit 1=1"Quick" acknowledgement with OB40
Bit 2=1No predefined auxiliary function
Bit 3=1No output to PLC
Bit 4=1Spindle response after acknowledgement by the PLC
Bit 5=1Output prior to motion
Bit 6=1Output during motion
Bit 7=1Output at end of block
Bit 8=1No output after block search types 1, 2, 4
Bit 9=1Collection during block search type 5 (SERUPRO)
Bit 10 = 1 No output during block search type 5 (SERUPRO)
Bit 11 = 1Cross-channel auxiliary function (SERUPRO)
Bit 12 = 1Output via synchronized action
Bit 13 = 1 Implicit auxiliary function
Bit 14 = 1 Active M01
Bit 15 = 1 No output during running-in test
Bit 16 = 1 Nibbling off
Bit 17 = 1 Nibbling on
Bit 18 = 1 Nibbling
The MD must be defined for each existing auxiliary function group.
The index [n] corresponds to the auxiliary function group: 0...63
The assignment of individual auxiliary functions to specific groups is defined in channel-specific machine data (AUXFU_PREDEF_TYPE, AUXFU_PREDEF_EXTENTION, AUXFU_PREDEF_VALUE, AUXFU_PREDEF_GROUP, AUXFU_ASSIGN_TYPE, AUXFU_ASSIGN_EXTENTION, AUXFU_ASSIGN_VALUE, AUXFU_ASSIGN_GROUP).
M0, M1, M2, M17 and M30 are assigned to group 1 by default.
The specification of this group (0x81: output duration 1 OB1 pass, output at end of block) must not be changed.
All spindle-specific auxiliary functions (M3, M4, M5, M19, M70) are assigned to group 2 by default.
If several auxiliary functions with different output types (before / during / at end of motion) are programmed in one motion block, then the output of the individual auxiliary functions occurs in accordance with their output types.
All auxiliary functions are output simultaneously in a block without motion.
Default setting:

```
   AUXFU_GROUP_SPEC[0]=81H
   AUXFU_GROUP_SPEC[1]=21H
   AUXFU_GROUP_SPEC[2]=41H
...
   AUXFU_GROUP_SPEC[n]=41H
```

11120	LUD_EXTENDED_SCOPE			N01	PG
-	Function "program global user data (PUD)" is active			BOOLEAN	PowerOn
-					
-	-	FALSE	-	-	0/0

Description: Activate function "Program-global user data (PUD)":
MD = 0: User data of the main program level are only active on this level.
MD = 1: User data of the main program level are also visible in the subprogram levels.

11140	GUD_AREA_SAVE_TAB			N01	-
-	Additional saving for GUD modules			DWORD	Immediately
-					
-	9	0,0,0,0,0,0,0,0	-	-	0/0

Description: This data indicates in which area the contents of the GUD module are also saved.
MD11140 $MN_GUD_AREA_SAVE_TAB[0] : SGUD_DEF
MD11140 $MN_GUD_AREA_SAVE_TAB[1] : MGUD_DEF
MD11140 $MN_GUD_AREA_SAVE_TAB[2] : UGUD_DEF
MD11140 $MN_GUD_AREA_SAVE_TAB[3] : GUD4_DEF
MD11140 $MN_GUD_AREA_SAVE_TAB[4] : GUD5_DEF
MD11140 $MN_GUD_AREA_SAVE_TAB[5] : GUD6_DEF
MD11140 $MN_GUD_AREA_SAVE_TAB[6] : GUD7_DEF
MD11140 $MN_GUD_AREA_SAVE_TAB[7] : GUD8_DEF
MD11140 $MN_GUD_AREA_SAVE_TAB[8] : GUD9_DEF
BitNo. Hexadec. Meaning when bit is set
Value
0 (LSB) 0x00000001 TOA area

11160	ACCESS_EXEC_CST			N01	-
-	Execution right for /_N_CST_DIR			BYTE	PowerOn
-					
-	-	7	-	-	2/2

Description: Execution right assigned to the program stored in directory /_N_CST_DIR :
Value 0: Siemens password
Value 1: Machine OEM password
Value 2: Password of startup engineer, service
Value 3: End user password
Value 4: Keyswitch position 3
Value 5: Keyswitch position 2
Value 6: Keyswitch position 1
Value 7: Keyswitch position 0
Machine data can only be written with values 0 and 1, and with the corresponding password also active.

11161	ACCESS_EXEC_CMA			N01	-
-	Execution right for /_N_CMA_DIR			BYTE	PowerOn
-					
-	-	7	-	-	2/2

Description:

Execution right assigned to the programs stored in directory /_N_CMA_DIR :
Value 0: Siemens password
Value 1: Machine OEM password
Value 2: Password of startup engineer, service
Value 3: End user password
Value 4: Keyswitch position 3
Value 5: Keyswitch position 2
Value 6: Keyswitch position 1
Value 7: Keyswitch position 0
Machine data can only be written with values 0 and 1, and with the corresponding password also active.

11162	ACCESS_EXEC_CUS			N01	-
-	Execution right for /_N_CUS_DIR			BYTE	PowerOn
-					
-	-	7	-	-	3/3

Description:

Execution right assigned to the programs stored in directory /_N_CUS_DIR :
Value 0: Siemens password
Value 1: Machine OEM password
Value 2: Password of startup engineer, service
Value 3: End user password
Value 4: Keyswitch position 3
Value 5: Keyswitch position 2
Value 6: Keyswitch position 1
Value 7: Keyswitch position 0
Machine data can only be written with values 0, 1 and 2, and with the corresponding password also active.

11165	ACCESS_WRITE_CST			N01	-
-	Write protection for directory /_N_CST_DIR			DWORD	PowerOn
-					
-	-	-1	-	-	2/2

Description:

Set write protection for cycle directory /_N_CST_DIR:
Assigned to the programs:
Value -1: Keep the value currently set
Value 0: Siemens password
Value 1: Machine OEM password
Value 2: Password of startup engineer, service
Value 3: End user password
Value 4: Keyswitch position 3
Value 5: Keyswitch position 2
Value 6: Keyswitch position 1
Value 7: Keyswitch position 0
The machine data can only be written with values 0 and 1, and with the corresponding password also active.

11166	ACCESS_WRITE_CMA			N01	-
-	Write protection for directory /_N_CMA_DIR			DWORD	PowerOn
-					
-	-	-1	-	-	2/2

Description:

Set write protection for cycle directory /_N_CMA_DIR:
Assigned to the programs:
Value -1: Keep the value currently set
Value 0: Siemens password
Value 1: Machine OEM password
Value 2: Password of startup engineer, service
Value 3: End user password
Value 4: Keyswitch position 3
Value 5: Keyswitch position 2
Value 6: Keyswitch position 1
Value 7: Keyswitch position 0
The machine data can only be written with values 0 and 1, and with the corresponding password also active.

11167	ACCESS_WRITE_CUS			N01	-
-	Write protection for directory /_N_CUS_DIR			DWORD	PowerOn
-					
802d-cu3	-	-1	-	-	2/2
802d-ng2	-	-1	-	-	2/2
802d-ng3	-	-1	-	-	2/2
802d-tm1	-	-1	-	-	3/3
802d-tm2	-	-1	-	-	3/3
802d-tm3	-	-1	-	-	3/3

Description:

Set write protection for cycle directory /_N_CUS_DIR:
Assigned to the programs:
Value -1: Keep the value currently set
Value 0: Siemens password
Value 1: Machine OEM password
Value 2: Password of startup engineer, service
Value 3: End user password
Value 4: Keyswitch position 3
Value 5: Keyswitch position 2
Value 6: Keyswitch position 1
Value 7: Keyswitch position 0
The machine data can only be written with values 0, 1 and 2, and with the corresponding password also active.

11170	ACCESS_WRITE_SACCESS			N01	-
-	Write protection for _N_SACCESS_DEF			BYTE	PowerOn
-					
-	-	7	-	-	2/2

Description: Set write protection for definition file /_N_DEF_DIR/_N_SACCESS_DEF:
Value 0: Siemens password
Value 1: Machine OEM password
Value 2: Password of startup engineer, service
Value 3: End user password
Value 4: Keyswitch position 3
Value 5: Keyswitch position 2
Value 6: Keyswitch position 1
Value 7: Keyswitch position 0
The machine data can only be written with values 0 and 1, and with the corresponding password also active.

11171	ACCESS_WRITE_MACCESS			N01	-
-	Write protection for _N_MACCESS_DEF			BYTE	PowerOn
-					
-	-	7	-	-	2/2

Description: Set write protection for definition file /_N_DEF_DIR/_N_SACCESS_DEF:
Value 0: Siemens password
Value 1: Machine OEM password
Value 2: Password of startup engineer, service
Value 3: End user password
Value 4: Keyswitch position 3
Value 5: Keyswitch position 2
Value 6: Keyswitch position 1
Value 7: Keyswitch position 0
The machine data can only be written with values 0 and 1, and with the corresponding password also active.

11172	ACCESS_WRITE_UACCESS			N01	-
-	Write protection for _N_UACCESS_DEF			BYTE	PowerOn
-					
-	-	7	-	-	3/3

Description: Set write protection for definition file /_N_DEF_DIR/_N_UACCESS_DEF:
Value 0: Siemens password
Value 1: Machine OEM password
Value 2: Password of startup engineer, service
Value 3: End user password
Value 4: Keyswitch position 3
Value 5: Keyswitch position 2
Value 6: Keyswitch position 1
Value 7: Keyswitch position 0
The machine data can only be written with values 0, 1 and 2, and with the corresponding password also active.

11200	INIT_MD			EXP, N01	IAF,IAD,IA
-	Standard machine data loaded at next Power On			BYTE	PowerOn
-					
-	-	0	-	-	0/0

Description:

A power on must be triggered after setting MD11200 $MN_INIT_MD. The function is executed and the MD reset to "0" at power on.

Meaning of the input:

Bit 0 set:

All machine data (with the exception of the memory-configuring data) will be overwritten with the compiled values at the next NCK power on.

Bit 1 set:

All memory-configuring machine data will be overwritten with the compiled values at the next NCK power on.

Bit 2 set:

The OEM machine data brought in by compile cycles will be deleted from the buffered memory at the next power on.

Bit 3 set:

All setting data will be overwritten with the compiled values at the next power on.

Bit 4 set: All option data will be overwritten with the compiled values at the next power on.

INIT_MD is automatically set to 0 at power on.

Memory configuring MDs are described in:

References: /IAD/, Installation and Startup Guide, Memory Configuration

- MD10010 $MN_ASSIGN_CHAN_TO_MODE_GROUP
- All machine data starting with "MM_"

  MD 18000 - 18999 (general MD)

  MD 28000 - 28999 (channel-specific MD)

  MD 38000 - 38999 (axis-specific MD)

11210	UPLOAD_MD_CHANGES_ONLY			N01, N05	IAD
-	Machine data backup of changed machine data only			BYTE	Immediately
-					
-	-	0x0F	-	-	2/2

Description:

Select differential MD upload:

Bit0(LSB) Effectiveness of the differential upload with TEA files (machine files)

0: All data are output

1: Only those MDs which have changed in comparison to the compiled values are output

Bit1 efficiency of differential upload for INI files

0: all data are output

1: only MDs changed from the value compiled in are output

Bit2 Change to an array element

0: Complete array is output

1: Only those elements of an array which have changed are output

Bit3 R parameters (only for INI files)

0: All R parameters are output

1: Only those R parameters not equal to '0' are output

Bit4 Frames (only for INI files)
0: All frames are output
1: Only those frames which are not zero frames are output.
Bit5 Tool data (cutting edge parameters) (only for INI files)
0: All tool data are output
1: Only those tool data not equal to '0' are output.

11220	INI_FILE_MODE			N01, N05	G2
-	Error response to INI file errors			BYTE	Reset
-					
-	-	1	0	2	0/0

Description:

If, while reading machine data files (INI files) into controls, data are read in

- that are faulty or
- do not agree with the check sum

then alarms are generated and the reading in may be aborted. The following control behaviors can be selected via machine data settings:
0: Output of an alarm, abort on detection of 1st error. (As SW versions 1 and 2).
1: Output of an alarm, continuation of execution. An alarm with the number of errors is output at the end of execution.
2: Execution continues despite possible errors. An alarm with the number of errors is output at the end of execution.

11230	MD_FILE_STYLE			N01, N05	IAD
-	Structure of machine data backup files			BYTE	Immediately
-					
-	-	3	-	-	0/0

Description:

Appearance of a machine data file at 'upload'
Bit 0 (LSB): Line check sum is generated
Bit 1:
MD numbers are generated
Bit 2:
Channel axis name as field index with axis-MD in the TEA file
Bit 3:
With an NCU-link, the MDs of the LINK axes are also output.
Bit 4:
All local axes are output (even when they are not activated by MD20070 $MC_AXCONF_MACHAX_USED)
Active:
The change in the data becomes active on the start of the upload for the next area.
Default setting:
The line check sums and MD numbers are generated, but not channel names as field index with axis-MD.

11240	PROFIBUS_SDB_NUMBER			N01, N05	K4,FBU
-	SDB number			DWORD	PowerOn
-					
-	4	0,-1,0	-1	7	2/2

Description: Only for PROFIBUS/PROFINET with selection option of autonomous SDB data management (802d, 828d):
Number of the system data block (SDB) used for configuring the I/Os.

11241	PROFIBUS_SDB_SELECT			N01, N05	-
-	SDB source selection			DWORD	PowerOn
-					
-	-	0	0	3	2/2

Description: Only for PROFIBUS/PROFINET with selection option of autonomous SDB data management (802d, 828d):
If MD11240 $MN_PROFIBUS_SDB_NUMBER > 0, SDBs are loaded directly from the directory:
MD11241 $MN_PROFIBUS_SDB_SELECT = 0: /siemens/sinumerik/sdb/...
MD11241 $MN_PROFIBUS_SDB_SELECT = 1: /addon/sinumerik/sdb/...
MD11241 $MN_PROFIBUS_SDB_SELECT = 2: /oem/sinumerik/sdb/...
MD11241 $MN_PROFIBUS_SDB_SELECT = 3: /user/sinumerik/sdb/...

11250	PROFIBUS_SHUTDOWN_TYPE			EXP, N01	G3,FBU
-	PROFIBUS/PROFINET shutdown handling			BYTE	PowerOn
-					
-	-	0	0	2	2/2

Description: For PROFIBUS/PROFINET only:
Handling of PROFIBUS/PROFINET when shutting down NCK (NCK reset)
Value 0:
The bus is shut down directly from cyclic operation, without 'prewarning'
Value 1:
When shutting down NCK, the bus is changed to the CLEAR state for at least 20 cycles. Then, it is shut down. If this is not possible on the hardware side, the procedure described for value 2 is used instead.
Value 2:
When shutting down NCK, the bus is changed to a state where all drives are sent a zero word as control word1 and control word2 (pseudoclear) for at least 20 cycles. The bus itself remains in the Operate status.

11270	DEFAULT_VALUES_MEM_MASK			N01	A2
-	Activation of default values for NC language elements			DWORD	PowerOn
-					
-	-	1	-	-	7/2

Description: Activation of the function 'Memory for initialization values of NC language elements'
Bit Hex. Meaning
value

0: (LSB) 0x1 default values GUD
Meaning of the individual bits:
Bit 0 = 0:
The default values stated for the definition are not stored

Bit 0 = 1:

The default values stated for the definition are stored persistently. The memory reserved via MD18150 $MN_MM_GUD_VALUES_MEM is used for this purpose.

The memory reserved via MD18150 $MN_MM_GUD_VALUES_MEM should be increased by the size required for default values.

If this size cannot be determined, the memory should be doubled and adaptations should be made later if required.

The stored default values can be restored, provided that the corresponding programming (REDEF) has been performed.

11280	WPD_INI_MODE			N01	IAD
-	Handling of INI files in workpiece directory			BYTE	PowerOn
-					
-	-	0	0	1	0/0

Description:

Processing mode of INI files in the workpiece directory:

Value = 0:

An INI file, _N_werkstück_INI, stored in the workpiece directory is executed on the first NC start after workpiece selection.

Value = 1:

INI files with the names of the selected part program and extensions are executed on the first NC start after workpiece selection

SEA,
GUD,
RPA,
UFR,
PRO,
TOA,
TMA and
CEC
.

11290	DRAM_FILESYSTEM_MASK			N01	S7
-	Select directories in DRAM			DWORD	PowerOn
-					
-	-	0x3f	-	-	0/0

Description:

Bit0-n = 0:

The files of the corresponding directory should be stored in SRAM

1:

The files of the corresponding directory should be stored in DRAM.

Bit0 CST directory (Siemens cycles)
Bit1 CMA directory (machine manufacturer's cycles)
Bit2 CUS directory (user cycles)
Bit3 MPF directory (main programs)
Bit4 SPF directory (subprograms)
Bit5 WPD directory (workpieces)

11291	DRAM_FILESYST_SAVE_MASK			N01	S7
-	Back up of directories in DRAM			DWORD	PowerOn
-					
-	-	0x3f	-	-	0/0

Description:

Bit0-n = 0:

No backup is performed. The files stored on NCK are lost if the control is switched off.

1:

Backup in the FFS of the NC card takes place if the files are located in DRAM.

Bit0 CST directory (Siemens cycles)
Bit1 CMA directory (machine manufacturer cycles)
Bit2 CUS directory (user cycles)
Bit3 MPF directory (main programs)
Bit4 SPF directory (subprograms)
Bit5 WPD directory (workpieces)

11292	DRAM_FILESYST_CONFIG			EXP	-
-	Configuration of the DRAM file system			BYTE	PowerOn
-					
-	-	0x22	-	-	0/0

Description:

Configuration of the DRAM file system.
It is not permitted to change the default value!
Bit0/1:

Background memory for the DRAM file system

Bit4/5:

Memory for a fast backup during editing of DRAM files.

11294	SIEM_TRACEFILES_CONFIG			EXP	-
-	Configuration of the SIEM* trace file			DWORD	PowerOn
-					
-	-	0	-	-	1/1

Description:

Configuration of the tracefiles SIEM*

Bit0:

Additional information about the PDUs sent is to be entered in _N_SIEMDOMAINSEQ_MPF for download

Bit1:

Additional information about the PDUs received is to be entered in _N_SIEMDOMAINSEQ_MPF for download

11297	PROTOC_IPOCYCLE_CONTROL			N01	-
-	Prevent overrun of IPO time level			BYTE	PowerOn
-					
-	10	1,1,1,1,1,1,1,1,1,1	0	1	1/1

Description:

Setting whether an overflow of the time level is to be prevented during the recording of data in the time level of the IPO.
If applicable, data sets are discarded when the function is active, and are not entered in the log file in order to prevent an impending overflow of the IPO time level.
This may mean that data sets are also then lost if a level overflow would not yet have occurred with the function inactive.

11298	PROTOC_PREPTIME_CONTROL			N01	-
-	Interruption time prep time level in seconds.			DOUBLE	PowerOn
-					
-	10	1.0,1.0,1.0,1.0,1.0,1.0, 1.0,1.0,1.0...	-	-	0/0

Description: Time in seconds, for which the prep time level may be blocked. If the PREP does not manage to pass through within the set time, the cyclic events are not logged. It is thus ensured that operation cannot be completely blocked by data recording.

11300	JOG_INC_MODE_LEVELTRIGGRD			N01	H1,R1
-	INC and REF in jog mode			BOOLEAN	PowerOn
-					
-	-	TRUE	-	-	1/1

Description: 1: Jog mode for JOG-INC and reference point approach

JOG-INC:

When the traversing key is pressed in the required direction (e.g. +), the axis begins to traverse the set increment. If the key is released before the increment has been completely the traversed, the movement is interrupted and the axis stops. If the same key is pressed again, the axis completes the remaining distance-to-go until this is 0.

0: Continuous operation for JOG-INC and reference point approach

JOG-INC:

When the traversing key is pressed (first rising edge) the axis travels the whole set increment. If the same key is pressed again (second rising edge) before the axis has completed traversing the increment, the movement is aborted, i.e. not completed.

The differences in axis travel behavior between the jog mode and continuous operation in incremental traversing are described in detail in the relevant chapters.

For travel behavior in reference point approach see

References: /FB/, R1, "Reference Point Approach"

MD irrelevant for:

Continuous traversing (JOG continuous)

11310	HANDWH_REVERSE			N09	H1
-	Threshold for direction change handwheel			BYTE	PowerOn
-					
-	-	2	-	-	2/2

Description: Handwheel travel:

Value = 0: no immediate traversing in the opposite direction

Value > 0: immediate traversing in the opposite direction if the handwheel is turned in the opposite direction by at least the indicated number of pulses

11320	HANDWH_IMP_PER_LATCH			N09	H1
-	Handwheel pulses per detent position			DOUBLE	PowerOn
-					
-	6	1.,1.,1.,1.,1.,1.	-	-	2/2

Description: The connected handwheels are adapted to the control in MD11320 $MN_HANDWH_IMP_PER_LATCH.
The number of pulses generated by the handwheel for each handwheel detent position has to be entered. The handwheel pulse weighting must be defined separately for each connected handwheel (1 to 3). With this adaptation, each handwheel detent position has the same effect as one press of the traversing key in incremental traversal.
Entering a negative value reverses the direction of rotation of the handwheel.

11322	CONTOURHANDWH_IMP_PER_LATCH			N09	H1
-	Contour handwheel pulses per detent position			DOUBLE	PowerOn
-					
802d-cu3	6	1.,1.,1.,1.,1.,1.	-	-	2/2
802d-ng2	6	1.,1.,1.,1.,1.,1.	-	-	0/0
802d-ng3	6	1.,1.,1.,1.,1.,1.	-	-	0/0
802d-tm1	6	1.,1.,1.,1.,1.,1.	-	-	0/0
802d-tm2	6	1.,1.,1.,1.,1.,1.	-	-	0/0
802d-tm3	6	1.,1.,1.,1.,1.,1.	-	-	0/0

Description: Adaptation factor to the hardware of the contour handwheel:
Enter the number of pulses issued per detent position by the contour handwheel.
Because of this normalization, a detent position of the contour handwheel corresponds to one press of a key with incremental jog processes.
Sign reversal reverses the direction of evaluation.

11324	HANDWH_VDI_REPRESENTATION			N01	OEM
-	Display of handwheel number in VDI Interface			DWORD	PowerOn
-					
-	-	0	0	1	0/0

Description: The number of the handwheel is displayed in the channel/axis-specific signals of the
VDI interface:
Value = 0 :
Bit coded (1 of 3, only 3 handwheels can be displayed)
Value = 1 :
Binary coded (6 handwheels can be displayed)

11330	JOG_INCR_SIZE_TAB			EXP, N09	H1
-	Increment size for INC/handwheel			DOUBLE	PowerOn
-					
-	5	1.,10.,100.,1000.,10000.	-	-	1/1

Description: In incremental traversal or handwheel travel, the number of increments to be traversed by the axis can be defined by the user, e.g. via the machine control panel.
In addition to the variable increment size (INCvar), 5 fixed increment sizes (INC...) can also be set.
The increment size for each of these 5 fixed increments is defined collectively for all axes by entering values in JOG_INCR_SIZE_TAB [n]. The default setting is INC1, INC10, INC100, INC1000 and INC10000.
The entered increment sizes are also active for DRF.
The size of the variable increment is defined in SD41010 $SN_JOG_VAR_INCR_SIZE.
Related to:
MD31090 $MA_JOG_INCR_WEIGHT (weighting of an increment for INC/manual)
NC/PLC interface signal V3300 1001.0-4,1005.0-4,1009.0-4
(geometry axis 1-3 active machine function: INC1; ...; INC10000)
NC/PLC interface signal V390x 0005.0 - .5
(active machine function: INC1; ...; INC10000).

11346	HANDWH_TRUE_DISTANCE			N01	H1,P1,W1
-	Handwheel default path or velocity			BYTE	PowerOn
-					
-	-	0	0	7	2/2

Description: 0: The default settings of the handwheel are velocity defaults. Braking during handwheel standstill is executed on the shortest travel path.
1: The default settings of the handwheel are path defaults.
No pulses are lost. Due to limiting to a maximum permitted speed, axes may be trailing.
2: Effects as with value=0, but with longer deceleration path during handwheel standstill.
3: Effects as with value=1, but with longer deceleration path during handwheel standstill.

11350	HANDWHEEL_SEGMENT			N09	H1
-	Handwheel segment			BYTE	PowerOn
-					
802d-cu3	3	2,2,0,0,0,0	-	-	1/1
802d-ng2	2	2,2,0,0,0,0	-	-	1/1
802d-ng3	2	2,2,0,0,0,0	-	-	1/1
802d-tm1	2	2,2,0,0,0,0	-	-	1/1
802d-tm2	2	2,2,0,0,0,0	-	-	1/1
802d-tm3	2	2,2,0,0,0,0	-	-	1/1

Description: Machine data defines which
hardware segment the handwheel is connected to:
0 = SEGMENT_EMPTY ;no handwheel
1 = SEGMENT_840D_HW ;handwheel at 840D HW
2 = SEGMENT_802DSL_HW ;handwheel at 802DSL HW
5 = SEGMENT_PROFIBUS ;handwheel at PROFIBUS
7 = SEGMENT_ETHERNET ;handwheel at Ethernet

11351	HANDWHEEL_MODULE			N09	H1
-	Handwheel module			BYTE	PowerOn
-					
802d-cu3	3	1,1,0,0,0,0	0	6	1/1
802d-ng2	2	1,1,0,0,0,0	0	6	1/1
802d-ng3	2	1,1,0,0,0,0	0	6	1/1
802d-tm1	2	1,1,0,0,0,0	0	6	1/1
802d-tm2	2	1,1,0,0,0,0	0	6	1/1
802d-tm3	2	1,1,0,0,0,0	0	6	1/1

Description: Machine data specifies the hardware module to which
the handwheel is connected.
(Content dependent on MD11350 $MN_HANDWHEEL_SEGMENT):
0 = no handwheel configured
$MN_HANDWHEEL_MODUL =
1 ;SEGMENT_840D_HW
1 ;SEGMENT_802DSL_HW
1..6 ;SEGMENT_PROFIBUS/PROFINET ;index for MD11353
$MN_HANDWHEEL_LOGIC_ADDRESS[(x-1)]
1 ;SEGMENT_ETHERNET

11352	HANDWHEEL_INPUT			N09	H1
-	Handwheel connection			BYTE	PowerOn
-					
802d-cu3	3	1,2,0,0,0,0	0	6	1/1
802d-ng2	2	1,2,0,0,0,0	0	6	1/1
802d-ng3	2	1,2,0,0,0,0	0	6	1/1
802d-tm1	2	1,2,0,0,0,0	0	6	1/1
802d-tm2	2	1,2,0,0,0,0	0	6	1/1
802d-tm3	2	1,2,0,0,0,0	0	6	1/1

Description: Machine data which is intended to select
the handwheels connected to
a hardware module:
0 = No handwheel configured
1..6 = Handwheel connection to HW module/Ethernet interface

11353	HANDWHEEL_LOGIC_ADDRESS			N04, N10	H1
-	Logical handwheel slot addresses			DWORD	PowerOn
-					
-	6	0,0,0,0,0,0	0	8191	1/1

Description: For PROFIBUS/PROFINET only:
Logical start address of the hand wheel slots if handwheels are connected by
PROFIBUS/PROFINET ($MN_HANDWHEEL_SEGMENT = 5)

11380	MONITOR_ADDRESS			EXP, N06	STZ
-	Test MD for changing the NCK code or data for Safety Integrated			DWORD	Immediately
NBUP, NDLD					
-	-	0	-	-	0/0

Description: Address of an NCU memory location whose content is displayed in the MD11382 $MN_MONITOR_DISPLAY_INT and 11384 $MN_MONITOR_DISPLAY_REAL.
There are no protective measures incorporated to prevent unauthorized access. That is the input address points to a memory area protected by the system or unoccupied, so refreshing the MD values MONITOR_DISPLAY_INT and MONITOR_DISPLAY_REAL causes a time-out and the NCU remains at a standstill (watchdog LED lights up)!
There is a list of permisible addresses for the test, which depends on the software version.
A restart resets the address to its starting value.
It then points to any writable and readable memory location that is not used by any other system function.

11382	MONITOR_DISPLAY_INT			EXP, N06	STZ
-	INTEGER display of the addressed location			DWORD	Immediately
NBUP, NDLD					
-	-	0	-	-	0/0

Description: INTEGER display of the addressed location SW3.2
This MD displays the content of the NCU memory location that is defined in MD11380 $MN_MONITOR_ADDRESS. The displayed values contains the four consecutive bytes from the stated address, whereby the first byte is on the extreme right and the fourth on the extreme left.
This MD is a display MD whose content is read anew on every display refresh. Writing to this MD is ignored (without alarm).

11384	MONITOR_DISPLAY_REAL			EXP, N06	STZ
-	REAL display of the addressed location			DOUBLE	Immediately
NBUP, NDLD					
-	-	0.0	-	-	0/0

Description: REAL display of the addressed location SW3.2
This MD displays the content of the NCU memory location that is defined in MDMD11380 $MN_MONITOR_ADDRESS. The displayed value interprets the eight consecutive memory locations from the stated address as a floating point number with double accuracy (64 bit IEEE format). 0.0 is displayed if this value does not correspond to a valid floating point number.
This MD is a display MD whose content is read anew on every display refresh. Writing to this MD is ignored (without alarm).

11386	MONITOR_INPUT_INT			EXP, N06	STZ
-	INTEGER input for the addressed location			DWORD	Immediately
NBUP, NDLD					
-	-	0	-	-	0/0

Description: INTEGER input for addressed location, SW3.2
The value is written with the aid of MD11390 $MN_MONITOR_INPUT_STROBE into the address selected with MD11380 $MN_MONITOR_ADDRESS. The 4 bytes from the stated address are taken over by writing the value 1 in the MD11390 $MN_MONITOR_INPUT_STROBE.
In so doing, the byte moves to the extreme right of the memory location MONITOR_ADDRESS, the byte to its left into the memory location MONITOR_ADDRESS+1, etc.

11388	MONITOR_INPUT_REAL			EXP, N06	STZ
-	REAL input for addressed location			DOUBLE	Immediately
NBUP, NDLD					
-	-	0.0	-	-	0/0

Description: REAL input for addressed location, SW3.2
The value is written with the aid of MD11390 $MN_MONITOR_INPUT_STROBE into the address selected with MD11380 $MN_MONITOR_ADDRESS. The 8 bytes from the stated address are taken over by writing the value 2 in the MD11390 $MN_MONITOR_INPUT_STROBE.
In so doing, the input floating point number is converted into 64 bit IEEE format.

11390	MONITOR_INPUT_STROBE			EXP, N06	STZ
-	Overwrite the addressed location with MONITOR_INT/ REAL			BYTE	Immediately
NBUP, NDLD					
-	-	0	0	2	0/0

Description: Overwriting the addressed location with MD11386 $MN_MONITOR_INPUT_INT/REAL or MD11388$MN_MONITOR_INPUT_REAL SW3.2
An input into this MD takes over the content of the MD11386 $MN_MONITOR_INPUT_INT or the MD11388 $MN_MONITOR_INPUT_REAL. The input value decides which data is taken over:
0: No action
1: Content of MD11386 $MN_MONITOR_INPUT_INT is written in four NCU bytes from MD11380 $MN_MONITOR_ADDRESS.
2: Content of MD11388 $MN_MONITOR_INPUT_REAL is written in eight NCU bytes from MD11380 $MN_MONITOR_ADDRESS.
The content of MONITOR_INPUT_STROBE is reset to 0 after the takeover (no action). A new input can therefore be made immediately.
In order to familiarize oneself with this function, one should first leave MD11380 $MN_MONITOR_ADDRESS at its default value. One can then write data without causing damage.
Examples:

```
MONITOR_INPUT_INT = 55AA
MONITOR_INPUT_STROBE = 1
=> in MONITOR_DISPLAY_INT appears 55AA
MONITOR_INPUT_REAL = 1.234
MONITOR_INPUT_STROBE = 2
=> in MONITOR_DISPLAY_REAL appears 1.234
```

Caution!!!

Writing data to unknown addresses can even destroy the NCK system program! That may have unforeseen consequences (danger to machine and people!). If the machine and those present survive such an action undamaged, the system program can usually be restored by power off/on.

11398	AXIS_VAR_SERVER_SENSITIVE			EXP	B3
-	Axis-Var server response			BYTE	PowerOn
-					
-	-	0	-	-	0/0

Description: The axis-variable server supplies the data for the OPI blocks SMA/SEMA, SGA/SEGA and SSP.

If no value can be supplied for an axis (e.g. because the axis is a link axis) then a default value (usually 0) is returned.

For debugging purposes, this machine data can be used to set the axis-var-server to sensitive so that an error message is returned instead of a default value.

0: default value

1: error message

11400	TRACE_SELECT			EXP	-
-	Activation of internal trace functions			DWORD	PowerOn
-					
-	-	0	-	-	0/0

Description: Bit string for activating internal trace functions for NCK time measurements, analog output of variables etc.

11405	TCI_TRACE_ACTIVE			EXP	-
-	Activation of internal task trace function			BOOLEAN	PowerOn
-					
-	-	FALSE	-	-	0/0

Description: Control the activation of the TCI interface for the NRKpro. It will activate the tci and kernel task traces modules.

11410	SUPPRESS_ALARM_MASK			EXP, N06	D1,M3,K3,S1,V1,W1
-	Mask for support of special alarm outputs			DWORD	PowerOn
-					
-	-	0x108003	0	0xFFFFFFFF	0/0

Description: Mask for suppressing special alarm outputs

Bit set: The corresponding alarm (warning) is NOT generated.

Bit 0:

Alarm 15110 "Channel %1 block %2 REORG not possible"

Bit 1:

Alarm 10763 "Channel %1 block %2. The path component of the block in the contour plane is zero"

Bit 2:

Alarm 16924 "Channel %1 Caution: program testing can modify tool/magazine data"

--> Note: The alarm is only a message alarm

Bit 3:
Alarm 22010 "Channel %1 spindle %2 block %3. Actual gear stage does not correspond to the set gear stage"
Bit 4:
Alarm 17188 "Channel %1 D number %2 with tool T nos. %3 and %4 defined"
Alarm 17189 "Channel %1 D number %2 of the tools at magazine/ magazine locations %3 and %4 defined". The two alarms are of equal status and only message alarms.
Bit 5:
Alarm 22071 "TO unit %1 tool %2 duplo no. %3 is active but not in the active wear grouping." The alarm is only a message alarm.
Bit 6:
Alarm 4027 "NOTICE! MD %1 was also changed for the other axes of the axis container %2 "
Alarm 4028 "NOTICE! The axial MDs in the axis container will be aligned on the next runup "
Bit 7:
Alarm 22070 "TO unit %1 please change tool T= %2 into magazine. Repeat data backup". The alarm is only a message alarm.
Bit 8:
Alarm 6411 "Channel %1 tool %2 with duplo no. %3 has reached tool prewarning limit"
Alarm 6413 "Channel %1 tool %2 with duplo no. %3 has reached tool monitoring limit."
The two alarms are only message alarms. They occur during the program execution.
Bit 9:
Alarm 6410 "TO unit %1 tool %2 with duplo no. %3 has reached tool prewarning limit ."
Alarm 6412 "TO unit %1 tool %2 with duplo no. %3 has reached tool monitoring limit ".
The two alarms are only message alarms. They occur as a result of an operator action.
Bit10:
Alarm 10604 "channel %1 block %2 "Thread lead increase too high"
Alarm 10605 "channel %1 block %2 "Thread lead decrease too high"
Bit 11:
Alarm 14088 "Channel 51 block %2 axis %3 doubtful position".
Bit 12:
Alarm 10607 "Channel %1 block %2 tapping cannot be executed with frame."
Bit13:
Alarm 10704 " channel %1 block %2 Protection area monitoring is not guaranteed."
Bit14:
Alarm 21701 "Measuring reactivated too soon (<2 IPO cycles)"
Bit15:
Alarm 5000 "Communication order cannot be executed"
Bit16:
Alarm 21600 "Monitoring active for ESR"
Bit17:
Alarm 16945 "Channel %1 action %2<ALNX> is delayed until block end"

Note: The alarm is only a message alarm.

Bit18:

Alarm 10750 "Channel %1 block %2 Activation of the tool radius compensation without tool number"

Bit19: Alarm 17193 "Channel %1 block %2 The active tool ist no longer at tool holder no./spindle no. %3, program %4"

Bit20:

Alarm 2900 "Reboot is delayed"

Bit21:

Alarm 22012 "Channel %1 block %2. Leading axis %3 is in simulation mode"

Alarm 22013 "Channel %1 block %2. Following axis %3 is in simulation mode"

Alarm 22014 "Channel %1 block %2. The dynamics of leading axis %3 and following axis %4 are very different"

Alarm 22040 "Channel%1 Block %3 Spindle %2 not referenced with zero mark" is no longer checked (cyclically) with

Bit21 set after power ON of the closed loop position control.

Bit22:

Alarm 26080 "Channel %1 retraction position of axis %2 not programmed or invalid"

Alarm 26081 "Channel %1 single axis trigger axis %2 is triggered, but axis is not PLC controlled"

Bit23:

Alarm 16949 "Correspondence between marks of channel %1 and channel %2 is invalid"

Bit24:

Alarm 16950 "Channel %1 search run with holding block"

Bit25:

Alarm 22016 "Channel %1 block %2 following spindle %3 in range of reduced acceleration capacity"

Bit26:

Alarm 22015 "Channel %1 block %2 following spindle %3 no dynamic for additional motion"

Bit27:

Alarms 16112 and 22030 "Channel %1 block %2 following spindle %3 impermissible programming"

Bit28:

Alarm 26083 "Channel %1 ESR for PLC controlled axis %2 was triggered"

Bit29:

Alarm 16772 "Channel %1 block %2 axis %3 is following axis, coupling is opened"

Bit30:

Alarm 16600 "Channel %1 block %2 spindle %3 gear stage change not possible"

Bit31:

Alarm 16774 "Channel %1 axis %2 synchronizsation aborted"

11411	ENABLE_ALARM_MASK			EXP	D1,K1
-	Activation of warnings			DWORD	Reset
-					
-	-	0	-	-	0/0

Description:

Mask for generating alarms that are normally suppressed.
Bit set:Alarms of this alarm group are output.
Bit not set:Alarms of this alarm group are not output.

Bit	Hex.Meaning value
0:	0x1Alarms that have SHOWALARMAUTO as the alarm response are output.
1:	0x2Alarms that have SHOWWARNING as the alarm response are output.
2:	0x4Alarm 22280 "Thread power up path too short" is output.
3:	0x8Alarms that are triggered by the NCU LINK MODULE are switched on.
4:	0x10Alarm 10883 "Chamfer or rounding must be shortened" allowed.
5:	0x20Alarm 20096 "Brake test aborted" is output.
6:	0x40Alarm 16956 "Program cannot be started because of global start disable" is output. Alarm14005 "Program cannot be started because of program-specific start disable" is output. Alarm can only be switched on in channel status RESET, in all other channel states it is output without conditions.
7:	0x80Alarm 16957 "Stop delay range is suppressed" is output.
8:	0x100Alarm 1011 fine coding150019 or 150020 "Incorrect axis number in the LINK".
9:	0x200Alarm 22033 Diagnostics 1 to 6 for "Track synchronism" (linkages).
10:	0x400Alarm 15122 "PowerOn after Powerfail: %1 data were restored, thereof %2 machine data, %3 errors" is output.
11:	0x800Alarms 10722, 10723, 10732 or 10733 are output instead of alarms 10720, 10721, 10730 or 10731.
12:	0x1000Alarm 22033 diagnostics greater than or equal to 7 for "Track synchronism" (linkages)

11412	ALARM_REACTION_CHAN_NOREADY			EXP, N01	D1
-	Alarm response CHAN_NOREADY permitted			BOOLEAN	PowerOn
-					
-	-	FALSE	-	-	0/0

Description:

This MD is used for compatibility with the PLC systems older than SW4.1.
If this MD is not set, the behavior implemented before SW4.1 (configured alarm reaction) is set
With SW 4.1 and higher, it is possible to set signal CHANNEL_NOREADY on the PLC in response to alarms.
If this MD is not set, then the alarm handler internally re-configures BAG_NOREADY into CHAN_NOREADY.

11413	ALARM_PAR_DISPLAY_TEXT			EXP, N01	D1
-	Alarm parameter as text output			BOOLEAN	PowerOn
-					
-	-	FALSE	-	-	0/0

Description:

If the MD is set, texts can be output as alarm parameters instead of numbers.

11414	ALARM_CLR_NCSTART_W_CANCEL			EXP, N01	D1
-	Clear NCSTART alarms with CANCEL			BOOLEAN	PowerOn
-					
-	-	FALSE	-	-	0/0

Description: If this MD is set, then alarms that have ClearInfo=NCSTART are cleared by the Alarm Cancel button as well as by NC-Start.
If this MD is not set, then NCSTART alarms are not cleared by Cancel.
The purpose of this MD is to provide compatibility with system behavior.

11415	SUPPRESS_ALARM_MASK_2			EXP, N06	-
-	Masking of alarm outputs			DWORD	PowerOn
-					
-	-	0xE	-	-	0/0

Description: Mask for suppressing special alarm outputs
Bit set:Corresponding alarm (warning) is NOT triggered.
Bit Hex. Meaning
value
==========
0: 0x116773 "Channel %1 axis %3 is following axis. The axis/spindle disables of the leading axes are different."
1: 0x22100 "NCK battery warning level reached"
2101 "NCK battery alarm"
2102 "NCK battery alarm"
2: 0x42120 "NCK fan alarm" (no effect on modules with a design requiring a fan)
3: 0x815120 "PowerFail: Display buffer overflow"
4: 0x1015187 "Error during execution of PROGEVENT file"
5: 0x2015188 "Error during execution of ASUB file"
6: 0x4026120 "$AA_ESR_ENABLE = 1 and axis is to become neutral"
26121 "Axis is neutral and $AA_ESR_ENABLE =1 is to be set"
26123 "$AA_ESR_ENABLE = 1 is to be set, but $MA_ESR_REACTION is not set"
26124 "$AC_TRIGGER triggered, but axis is neutral, ESR ignores this axis"
7: 0x80:10724 "Software limit violated at block start"
10734 "Operating range limit violated at block start"
10737 "WCS operating range limit violated at block start"
8: 0x10014008 "WRITE command in /_N_EXT_DIR"
10734 "Operating range limit violated at block start"
10737 "WCS operating range limit violated at block start"
9: 0x20014006 "Invalid program name"
10: 0x4004006 "Maximum number of activatable axes exceeded"
11: 0x80016017 "LIFTFAST ignores this axis, as it is not applicable to this type of axis."

11450	SEARCH_RUN_MODE			EXP, N01	K1,TE3,N4,H2,Z1
-	Parameterization for search run			DWORD	PowerOn
-					
-	-	0	0	0x3F	1/1

Description: The behavior during the action blocks after search run can be affected by the following bits:

Bit 0 = 0:

Machining is stopped after loading of the last action block after search run, the NC/PLC interface signal V3300 0000.6 (last action block active) and alarm 10208 is output.

Bit 0 = 1:

Machining is stopped with the loading of the last action block after search run, and the NC/PLC interface signal V3300 0000.6 (last action block active) is set. Alarm 10208 is not output until the PLC requests it by setting the NC/PLC interface signal V3200 0001.6 (PLC action finished).

Usage:

Starting an ASUB from the PLC after search run.

The message to the operator that another NC start is required in order to continue with the program is not to be displayed until after the end of the ASUB.

Bit1 = 1

Automatic ASUB start after output of the action blocks (see also MD11620 $MN_PROG_EVENT_NAME). Alarm 10208 is not output until the ASUB has finished.

Bit2 = 0:

Spindle: The auxiliary functions are output in the action blocks

Bit2 = 1:

The output of the auxiliary functions in the action blocks is suppressed. The spindle programming collected by search run can be output at a later point in time (e.g. in an ASUB).

The program data for this are stored in the following system variables:

$P_SEARCH_S,

$P_SEARCH_SDIR,

$P_SEARCH_SGEAR,

$P_SEARCH_SPOS,

$P_SEARCH_SPOSMODE.

Bit 3 = 1:

The cascaded search run is disabled (default setting: release).

Cascaded search run means that the search run is restarted immediately after finding a search target.

Bit 4:Reserved

Bit 5 = 0:

During block search on a nibbling block the 1st nibbling stroke is not executed.

Bit 5 = 1:

During block search on a nibbling block a punching stroke is triggered at block start (1st nibbling stroke).

11460	OSCILL_MODE_MASK			N09	P5
-	Mode mask for asynchronous oscillation			DWORD	PowerOn
-					
-	-	0x0	0	0xFFFF	0/0

Description:

Bit 0

Value 1

In the case of block search, the oscillation movement is started immediately after NC start, i.e. during approach to approach position, provided it has been activated in the program section being processed.

Value 0

(default value)

The oscillation movement is not started until the approach position is reached.

11470	REPOS_MODE_MASK			EXP, N01	K1
-	Repositioning properties			DWORD	PowerOn
-					
-	-	0x8	0	0xFFFF	1/1

Description:

This bit mask can be used to set the behavior of the control during repositioning.

Bit no. Meaning when bit set

---

0 (LSB)

The dwell time is continued in the residual block from where it was interrupted. (If the bit is not set, the dwell time is repeated completely).

1 Reserved

2 When the bit is set, the repositioning of individual axes can be prevented or delayed via the VDI interface.

3 When the bit is set, positioning axes are repositioned in the approach block during search run via program test.

4 As 3, but after every Repos, not only during search run.

5 When the bit is set, changed feeds and spindle speeds already become valid in the residual block, otherwise not until the following block.

6 When the bit is set, neutral axes and positioning spindles are repositioned after SERUPRO as command axes in the approach block.

7 The bit changes the behavior of the VDI-AXIN interface signal "Repos Delay". The level of "Repos Delay" is read if REPOSA is interpreted. Axes that are neither geo nor orientation axes are then excluded from the REPOS, that is REPOS does NOT move these axes.

11480	PLC_OB1_TRACE_DEPTH			EXP, N03, N09	-
-	Buffer depth of PLC trace data at OB1			DWORD	PowerOn
-					
-	-	2	2	8	0/0

Description: Buffer depth of PLC trace data at OB1.
Multiple values of PLC data are buffered, between the time of collection in the PLC and the time of inspection in NCK. Variables traced at "OB1" are collected once per complete PLC scan, but can only be inspected once per IPO cycle.
The buffer size must accomodate at least one more value than the total number of buffered values to be inspected. This is to prevent NCK from inspecting a value that the PLC is in the process of collecting.
A good value to start with is one more than MD10074 $MN_PLC_IPO_TIME_RATIO.
The larger the buffer depth, the fewer PLC variables that can be traced, because there is a single, small, fixed pool of data slots for sending data samples from the PLC to NCK (64 data slots). Every PLC variable being traced is allocated as many data slots from the pool as the value of the buffer depth.
This single pool of data slots is shared by data collected at OB1, OB35, and OB40 (even though the buffer depths of OB1, OB35, and OB40 can be configured to be different from one another). It is also shared by all concurrent users of trace, even though the users might have no knowledge of one another.

11481	PLC_OB35_TRACE_DEPTH			EXP, N03, N09	-
-	Buffer depth of PLC trace data at OB35			DWORD	PowerOn
-					
-	-	2	2	8	0/0

Description: Buffer depth of PLC trace data at OB35.
Multiple values of PLC data are buffered, between the time of collection in the PLC and the time of inspection in NCK. Variables traced at "OB35" are collected every time the PLC timer interrupts, but can only be inspected once per IPO cycle.
The buffer size must accomodate at least one more value than the number of buffered values to be inspected. This is to prevent NCK from inspecting a value that the PLC is in the process of collecting.
A good value to start with is one more than the number of PLC timer interrupts expected to occur every IPO cycle.
The larger the buffer depth, the fewer PLC variables that can be traced, because there is a single, small, fixed pool of data slots for sending data samples from the PLC to NCK (64 data slots). Every PLC variable being traced is allocated as many data slots from the pool as the value of the buffer depth.
The single pool of data slots is shared by data collected at OB1, OB35, and OB40 (even though the buffer depths of OB1, OB35, and OB40 can be configured to be different from each other). It is also shared by all concurrent users of trace, even though the users might have no knowledge of one another.

11482	PLC_OB40_TRACE_DEPTH			EXP, N03, N09	-
-	Buffer depth of PLC trace data at OB40			DWORD	PowerOn
-					
-	-	2	2	8	0/0

Description: Buffer depth of PLC trace data at OB40.
Multiple values of PLC data are buffered, between the time of collection in the PLC and the time of inspection in NCK. Variables traced at "OB40" are collected just when the PLC receives the special, programmably initiated OB40 interrupt from NCK, but can only be inspected once per IPO cycle.
The buffer size must accomodate at least one more value than the number of buffered values to be inspected. This is to prevent NCK from inspecting a value that the PLC is in the process of collecting.
If the OB40 interrupt is issued less frequently than once per IPO cycle, then the OB40 buffer depth should be 2. Otherwise it should be one more than the largest number of interrupts expected during any one IPO cycle.
The larger the buffer depth, the fewer PLC variables that can be traced, because there is a single, small, fixed pool of data slots for sending data samples from the PLC to NCK (64 data slots). Every PLC variable being traced is allocated as many data slots from the pool as the value of the buffer depth.
The single pool of data slots is shared by data collected at OB1, OB35, and OB40 (even though the buffer depths of OB1, OB35, and OB40 can be configured to be different from each other). It is also shared by all concurrent users of trace, even though the users might have no knowledge of one another.

11550	STOP_MODE_MASK			N01	V1
-	Defines the stop behavior.			DWORD	PowerOn
-					
-	-	0	0	0x1	0/0

Description: This MD describes the stop behavior of the NCK under certain conditions:
Bit no. Meaning
Bit 0 == 0 :=
No stop if G codes G331/G332 are active and a path motion or G4 has also been programmed.
Bit 0 == 1 :=
Same behavior as until SW version 6.4, i.e. a stop is possible during G331/G332.
Bits 1.....15
Not assigned

11600	BAG_MASK			N01	K1,Z1
-	Defines the mode group behavior			DWORD	PowerOn
-					
-	-	0	0	0x3	0/0

Description: This MD describes the effect of the VDI signals on the channels of a mode group in respect of ASUBs and interrupt routines.
Bit no. Hexadec. Meaning when bit set
value
Bit0: 0x0 Normal response to mode group signals in all channels of the mode group (as SW 3. All channels switch into a program operating mode on interrupt.

Bit0: 0x1 No response to other mode group VDI signale in the channel in which an interrupt handling (ASUB) is running. BAG-RESET, BAG-STOP. individual types A and B, mode selection)

Bit1: 0x1 There is an operating mode changeover only in those channels which have received an interrupt request. (Only when bit 0 is set!)

11602	ASUP_START_MASK			N01, -	K1,M3,TE3,TE7
-	Ignore stop conditions for ASUB			DWORD	PowerOn
-					
-	-	0	0	0xf	2/2

Description: This machine data defines which stop reasons are to be ignored at an ASUB start. The ASUB is started, or the following stop reasons are ignored:

Bit 0 :

STOP reason: STOP key , M0 or M01

An ASUB is started immediately if NCK is in RESET state (or JOG mode)(no ASUB can be started in RESET/JOG without this bit).

NOTICE:

- This bit is set implicitly if MD20108 $MC_PROG_EVENT_MASK deviates from zero in a channel!

- This bit is set implicitly if BIT 1 is set in MD11450 $MN_SEARCH_RUN_MODE!

Bit 1 :

Start allowed even if not all axes have yet been referenced.

Bit 2:

Start allowed even if a read-in disable is active,that is the blocks of the ASUB program are loaded and executed immediately. This disables machine data IGNORE_INHIBIT_ASUP. The NCK behavior corresponds to the machine data contents of IGNORE_INHIBIT_ASUP== FFFFFFFF.

If the bit is not set:

then the ASUB is internally selected, but not processed until the read-in disable is canceled.

The assignment of the machine data IGNORE_INHIBIT_ASUP is evaluated.

If IGNORE_INHIBIT_ASUP = 0 also applies, then an ASUB is triggered immediately internally, but the blocks of the ASUB program are not loaded until the read-in disable is canceled.

The path is immediately decelerated when the ASUB is triggered (except with option BLSYNC).

The read-in disable is set once more in the ASUB program.

Bit 3:

Notice:

The following function can always be activated in single-channel systems. Multi-channel system require bit1 in MD11600 $MN_BAG_MASK in addition. The function is active o_n_l_y for those ASUBs that were activated from program status Abort (channel status Reset). The function is not active in multi-channel systems without MD11600 $MN_BAG_MASK Bit1.

If an ASUB is started automatically from JOG, the user may stop in the middle of the ASUB program. The JOG mode is continuously displayed for the user. With bit 3 set, the user may jog in this situation. This is not possible without bit 3. In this case mode change is locked with alarm 16927. By pressing the Start key, the user can continue the ASUB program. As long as the ASUB program is running, the user is naturally not able to jog. After ASUB program end the user may jog again.

Bits 4 to 15:Reserved
Related to:
MD11604 $MN_ASUP_START_PRIO_LEVEL

11604	ASUP_START_PRIO_LEVEL			N01, -	K1,TE3,TE7
-	Priorities from which 'ASUP_START_MASK' is effective			DWORD	PowerOn
-					
-	-	0	0	128	2/2

Description: This machine data defines the ASUB priority from which MD11602 $MN_ASUP_START_MASK is to be applied. MD11602 $MN_ASUP_START_MASK is applied from the level specified here up to the highest ASUB priority level 1.
Related to:
MD11602 $MN_ASUP_START_MASK

11610	ASUP_EDITABLE			N01	K1
-	Activation of a user-specific ASUB program			DWORD	PowerOn
-					
-	-	0	0	0x7	2/2

Description: This MD determines whether user-specific routine: _N_ASUP_SPF stored in directory _N_CUS_DIR/ _N_CMA_DIR is to be used to process RET and REPOS. The user ASUB is searched for first in _N_CUS_DIR.
Value: Meaning:
0 Routine _N_ASUP_SPF is not activated for either RET or REPOS.
Bit0 = 1User-specific routine _N_ASUP_SPF is executed for RET, the routine supplied by the system is executed for REPOS.
Bit1 = 1User-specific routine _N_ASUP_SPF is executed for REPOS, the routine supplied by the system is executed for RET
Bit0= + bit1 = 3User-specific routine _N_ASUP_SPF is executed for both RET and REPOS
Bit2 = 1User ASUB _N_ASUP_SPF is searched for first in _N_CMA_DIR
Related to:
MD11612 $MN_ASUP_EDIT_PROTECTION_LEVEL
References:
/IAD/ "Installation and Start-Up Guide"

11612	ASUP_EDIT_PROTECTION_LEVEL			N01	K1
-	Protection level of the user-specific ASUB program			DWORD	PowerOn
-					
-	-	2	0	7	2/2

Description: Protection level of the user-specific ASUB program for RET and/or REPOS
The data is active only if MD11610 $MN_ASUP_EDITABLE is set to a value other than 0.
This machine data defines the protection level of the program _N_ASU_CUS.
MD irrelevant for:
MD11610 $MN_ASUP_EDITABLE set to 0
Related to:
MD11610 $MN_ASUP_EDITABLE

11620	PROG_EVENT_NAME			EXP, N12	K1
-	Program name for PROG_EVENT			STRING	PowerOn
-					
-	-		-	-	2/2

Description: Name of the user program called by the functions "Event-controlled program calls" and "Automatic ASUB start after block search" (MD11450 $MN_SEARCH_RUN_MODE Bit1). _N_PROG_EVENT_SPF is preset.
The presetting becomes active if MD11620 $MN_PROG_EVENT_NAME includes a blank string.
If the machine data does not contain a blank string, then the syntax of the string is checked as in the case of a subprogram identifier. This means that the first two characters must be letters or underscores (not numbers). If this is not the case, alarm 4010 is output during power on.
The program must be located in a cycle directory. The following search path is run through when it is called:

1. /_N_CUS_DIR/_N_PROG_EVENT_SPF
2. /_N_CMA_DIR/_N_PROG_EVENT_SPF
3. /_N_CST_DIR/_N_PROG_EVENT_SPF

The prefix (_N_) and the suffix (_SPF) of the program name are added automatically if they have not been declared.

11640	ENABLE_CHAN_AX_GAP			N01, N11	K2
-	Allow channel axis gaps in AXCONF_MACHAX_USED			DWORD	PowerOn
-					
-	-	0x0	0	0x1	0/0

Description: Bit0 = 1
Machine data allows configuration of channel axis gaps in the MD20070 $MC_AXCONF_MACHAX_USED.
Permits following MD assignment:

```
$AXCONF_MACHAX_USED[0] = 1     ; 1st  MA is 1st axis in channel
$AXCONF_MACHAX_USED[1] = 2     ; 2nd MA is 2nd axis in channel
$AXCONF_MACHAX_USED[2] = 0     ; Channel axis gap
$AXCONF_MACHAX_USED[3] = 3     ; 3rd MA is 3rd axis in channel
$AXCONF_MACHAX_USED[4] = 0
```

C A U T I O N:
(BIT0 set with MD20070 $MC_AXCONF_MACHAX_USED):
If a geo axis is placed in a channel axis gap with MD20050 $MC_AXCONF_GEOAX_ASSIGN_TAB[1]= 3, the control responds as with MD20050 $MC_AXCONF_GEOAX_ASSIGN_TAB[1]= 0. This eliminates the geo axis!
Transformation machine data must not be assigned a channel axis number specified as a gap.
BIT1 - BIT31: not used.
Related to:
MD20080 $MC_AXCONF_CHANAX_NAME_TAB,
MD20050 $MC_AXCONF_GEOAX_ASSIGN_TAB,
MD20060 $MC_AXCONF_GEOAX_NAME_TAB
MD20070 $MC_AXCONF_MACHAX_USED
MD24... $MC_TRAFO_AXES_IN_...
MD24... $MC_TRAFO_GEOAX_ASSIGN_TAB_...

11700	PERMISSIVE_FLASH_TAB			EXP, N01	IAD
-	Codes for NC card			DWORD	PowerOn
-					
-	6	0,0,0,0,0,0,0,0	-	-	1/1

Description: Normally, the NCK knows the program algorithms for writing on the flash of the PCMCIA card, however, if "new" cards with another ManufactorCode and/or DeviceCode are used, then these values can be entered here. Whereby, the ManufactorCode must be entered in the first line, and the DeviceCode in the following line.

11717	D_NO_FCT_CYCLE_NAME			EXP, N12, N07	K1
-	Subroutine name for D function replacement			STRING	PowerOn
-					
-	-		-	-	2/2

Description: Cycle name for replacement routine of the D function.
If a D function is programmed in a part program block, then, depending on machine data MD10717 $MN_T_NO_FCT_CYCLE_NAME, MD10719 $MN_T_NO_FCT_CYCLE_MODE and MD10718 $MN_M_NO_FCT_CYCLE_PAR, the MD subprogram defined in MD11717 $MN_D_NO_FCT_CYCLE_NAME is called.
The programmed D number can be polled in the cycle via system variable $C_D / $C_D_PROG.
MD11717 $MN_D_NO_FCT_CYCLE_NAME is only active in Siemens mode (G290).
No more than one M/T/D function replacement can be active per part program line.
A modal subprogram call must not be programmed in the block with the D function replacement. Furthermore, neither subprogram return nor part program end are allowed.
In the event of a conflict alarm 14016 is output.

11750	NCK_LEAD_FUNCTION_MASK			N09	-
-	Functions for master value coupling			DWORD	NEW CONF
-					
-	-	0x00	0	0x10	1/1

Description: Special functions of the master value coupling are set with this MD.
The MD is bit-coded, the following bits are assigned:
Bits 0-3:
reserved
Bit 4 == 0:
the following axis of a master value coupling decelerates independently on NC or mode group stop or channel-specific feed disable
Bit 4 == 1:
the following axis of a master value coupling does not decelerate independently on NC or mode group stop or channel-specific feed disable
Bits 5-31:
reserved

11752	NCK_TRAIL_FUNCTION_MASK			N09	-
-	Functions for coupled motion			DWORD	NEW CONF
-					
-	-	0x200	0	0x210	1/1

Description: Special functions for coupled motions are set with this MD.
The MD is bit-coded; the following bits are assigned:
Bits 0-3:
reserved
Bit 4 = 0:
the following axis of a coupled axis grouping activated by a synchronized action decelerates independently on NC or mode group stop or channel-specific feed disable
Bit 4 = 1:
the following axis of a coupled axis grouping activated by a synchronized action does not decelerate independently on NC or mode group stop or channel-specific feed disable
Bit 5-31:
reserved

11754	COUPLE_CYCLE_MASK			EXP, N09	-
-	Replacement of coupling language commands by machining cycles			DWORD	PowerOn
-					
-	-	0x0	0	0x3F	1/1

Description: This machine data defines which predefined procedures for axis-spindle coupling are replaced by machining cycles.
This MD is bit-coded; the following bits have been assigned:
Bit 0 == 0:
The predefined procedures EGDEL, EGOFC, EGOFS, EGON, EGONSYN and EGONSYNE are executed
Bit 0 == 1:
The predefined procedures EGDEL, EGOFC, EGOFS, EGON, EGONSYN and EGONSYNE are replaced by calling machining cycles
Bit 1 == 0:
The predefined procedures LEADON and LEADOF are executed
Bit 1 == 1:
The predefined procedures LEADON and LEADOF are replaced by calling machining cycles
Bit 2 == 0:
The predefined procedures TRAILON and TRAILOF are executed
Bit 2 == 1:
The predefined procedures TRAILON and TRAILOF are replaced by calling machining cycles
Bit 3 == 0:
The predefined procedures COUPDEF, COUPDEL, COUPOF, COUPOFS, COUPON, COUPONC and COUPRES are executed
Bit 3 ==1:
The predefined procedures COUPDEF, COUPDEL, COUPOF, COUPOFS, COUPON, COUPONC and COUPRES are replaced by calling machining cycles

Bit 4 == 0:
The predefined procedures LEADON and LEADOF are executed in synchronized actions
Bit 4 == 1:
The predefined procedures LEADON and LEADOF are replaced in synchronized actions by calling machining cycles as technology cycles
Bit 5 == 0:
The predefined procedures TRAILON and TRAILOF are executed in synchronized actions
Bit 5 == 1:
The predefined procedures TRAILON and TRAILOF are replaced in synchronized actions by calling machining cycles as technology cycles

11756	NCK_EG_FUNCTION_MASK			N09	-
-	Functions for Electronic Gear			DWORD	NEW CONF
-					
-	-	0x0	0	0x2F	1/1

Description: This MD is used to set special functions of Electronic Gear (EG).
The MD is bit-coded, the following bits are occupied:
Bit 0 - 4:
reserved
Bit 5 = 0:
Positions indicated in EGONSYN and EGONSYNE are evaluated according to setting G700 or G710 inch or metric that is valid in the currently machined part program block.
Bit 5 = 1
Positions indicated in EGONSYN and EGONSYNE are evaluated in the basic system involved.
Bit 6 - 31:
reserved

2.2.2 Override switch settings

12000	OVR_AX_IS_GRAY_CODE			EXP, N10	V1,Z1
-	Axis feedrate override switch Gray-coded			BOOLEAN	PowerOn
-					
-	-	TRUE	-	-	1/1

Description: lThis machine data is used to adapt the axis feed override switch to the interface coding of the PLC interface.
1: The 5 low-order bits of the PLC interface signal V380x 0000 (Feed override A-H) are interpreted as a Gray code. The value which is read corresponds to a switch setting. It is used as an index for selecting the correct override factor from the table of MD12010 $MN_OVR_FACTOR_AX_SPEED [n].

0: The feed override byte of the PLC interface is interpreted as a binary representation of the override value in percent (limit 200 percent).
Related to:
NC/PLC interface signal V380x 0000 (Feed override A-H), (axis-specific)
MD12010 $MN_OVR_FACTOR_AX_SPEED [n]
(Evaluation of the axis feed override switch)

12010	OVR_FACTOR_AX_SPEED			EXP, N10	V1,Z1
-	Evaluation of axis feedrate override switch			DOUBLE	PowerOn
-					
-	31	0.00,0.01,0.02,0.04,0.06,0.08,0.10...	0.00	2.00	1/1

Description: Evaluation of the axis velocity override switch with gray-coded interface.
Not relevant with:
MD12000 $MN_OVR_AX_IS_GRAY_CODE = 0
Related to:
NC/PLC interface signal V380x 0000 (Feed override A-H), (axis-specific)

12020	OVR_FEED_IS_GRAY_CODE			EXP, N10	V1,Z1
-	Path feedrate override switch Gray-coded			BOOLEAN	PowerOn
-					
-	-	TRUE	-	-	1/1

Description: This machine data is used to adapt the path feed override switch to the interface coding of the PLC interface.
1: The 5 low-order bits of the NC/PLC interface signal V380x 0000 (Feed override A-H) are interpreted as a Gray code. The value which is read corresponds to a switch setting. It is used as an index for selecting the correct override factor from the table of MD12030 $MN_OVR_FACTOR_FEEDRATE [n].

0: The feed override byte of the PLC interface is interpreted as a binary representation of the override value in percent (limit 200 percent).
Related to:
NC/PLC interface signal V380x 0000 (Feed override A-H)
MD12030 $MN_OVR_FACTOR_FEEDRATE [n]
(Evaluation of the path feed override switch)

12030	OVR_FACTOR_FEEDRATE			EXP, N10	V1,B1,Z1
-	Evaluation of path feedrate override switch			DOUBLE	PowerOn
-					
-	31	0.00,0.01,0.02,0.04,0.06,0.08,0.10...	0.00	2.00	1/1

Description: Evaluation of the feedrate override switch with gray-coded interface.
Special function of the 31st value for the velocity control:
The setting of the 31st override value defines the dynamic reserves which take the velocity control to be an excessive increase in the path feed. The setting should correspond to the highest override factor actually used.
The function of the 31st value is thus identical to the effect of MD12100 $MN_OVR_FACTOR_LIMIT_BIN when using the binary-coded interface.
Not relevant with:
MD12020 $MN_OVR_FEED_IS_GRAY_CODE = 0
Related to:
NC/PLC interface signal V380x 0000 (Feed override A-H)

12040	OVR_RAPID_IS_GRAY_CODE			EXP, N10	V1,Z1
-	Rapid traverse override switch Gray-coded			BOOLEAN	PowerOn
-					
-	-	TRUE	-	-	1/1

Description: This machine data is used to adapt the rapid traverse override switch to the interface coding of the PLC interface.
1: The 5 low-order bits of the PLC interface signal V3200 0005 (Rapid traverse override A-H) are interpreted as a Gray code. The value which is read corresponds to a switch setting.
It is used as an index for selecting the correct override factor from the table of MD12050 $MN_OVR_FACTOR_RAPID_TRA[n].
0: The rapid traverse override byte of the PLC interface is interpreted as a binary representation of the override value in percent (limit 200 percent).
Related to:
NC/PLC interface signal V3200 0005 (Rapid traverse override A-H)
MD12050 $MN_OVR_FACTOR_RAPID_TRA[n]
(Evaluation of the rapid traverse override switch)

12050	OVR_FACTOR_RAPID_TRA			EXP, N10	V1,Z1
-	Evaluation of rapid traverse override switch			DOUBLE	PowerOn
-					
-	31	0.00,0.01,0.02,0.04,0.06,0.08,0.10...	0.00	1.00	1/1

Description: Evaluation of the rapid traverse override switch with gray-coded interface.
Not relevant with:
MD12040 $MN_OVR_RAPID_IS_GRAY_CODE = 0
Related to:
NC/PLC interface signal V3200 0005 (Rapid traverse override A-H)

12060	OVR_SPIND_IS_GRAY_CODE			EXP, N10	V1,Z1
-	Spindle override switch Gray-coded			BOOLEAN	PowerOn
-					
-	-	TRUE	-	-	1/1

Description: This machine data is used to adapt the spindle speed override switch to the interface coding of the PLC interface.
1: The 5 low-order bits of the "spindle speed override" PLC interface signal are interpreted as a Gray code. The value which is read corresponds to a switch setting. It is used as an index for selecting the correct override factor from the table of MD12070 $MN_OVR_FACTOR_SPIND_ SPEED [n].
0: The spindle speed override byte of the PLC interface is interpreted as a binary representation of the override value in percent (limit 200 percent).
Related to:
NC/PLC interface signal V380x 2003 (Spindle speed override)
MD12070 $MN_OVR_FACTOR_SPIND_SPEED[n]
(Evaluation of the spindle speed override switch)

12070	OVR_FACTOR_SPIND_SPEED			EXP, N10	V1,Z1
-	Evaluation of spindle override switch			DOUBLE	PowerOn
-					
-	31	0.5,0.55,0.60,0.65,0.70,0.75,0.80...	0.00	2.00	1/1

Description: Evaluation of the spindle-specific override switch with Gray-coded interface.
Special function of the 31st value for the velocity control:
The setting of the 31st override value defines the dynamic reserves which take the velocity control to be an excessive increase in the spindle feed. The setting should correspond to the highest override factor actually used. The function of the 31st value is thus identical to the effect of MD12100 $MN_OVR_FACTOR_LIMIT_BIN when using the binary-coded interface.
Not relevant for:
MD12060 $MN_OVR_SPIND_IS_GRAY_CODE = 0
Related to:
NC/PLC interface signal V380x 2003 (Spindle speed override)

12080	OVR_REFERENCE_IS_PROG_FEED			N10, N09	V1
-	Override reference speed			BOOLEAN	PowerOn
-					
-	-	TRUE	-	-	0/0

Description: The entry in this MD specifies whether the spindle override given by the IS refers to the speed limited by MD/SD or to the programmed speed.
1: Spindle override acts with reference to the programmed speed
(programmed speed _ spindle override 100%)
0: Spindle override acts on the speed limited by MD or SD
(speed limited by MD/SD _ spindle override 100%)
Related machine data:
A speed limitation is effected by the following MDs or SDs:
MD35100 $MA_SPIND_VELO_LIMIT Maximum spindle speed
MD35130 $MA_GEAR_STEP_MAX_VELO_LIMIT Maximum speed of gear stage
MD35160 $MA_SPIND_EXTERN_VELO_LIMIT Spindle speed limitation by PLC
SD43220 $SA_SPIND_MAX_VELO_G26 Maximum spindle speed

SD43230 $SA_SPIND_MAX_VELO_LIMS Spindle speed limitation with G96

12082	OVR_REFERENCE_IS_MIN_FEED			N10, N09	V1
-	Specification of the reference of the path override			BOOLEAN	PowerOn
-					
-	-	FALSE	-	-	0/0

Description: The reference speed for the path feed override specified via the machine control panel can be set differently from the standard.

0: Standard:

The override is relative to the programmed feed.

1: Special case:

The override is relative to the programmed feed or to the path feed limit, depending on which resulting value is lower. In this way, even for a great feed reduction (due to the permissible axis dynamics), the effect of the override value (in the range 0 to 100%) is always visible.

12090	OVR_FUNCTION_MASK			N01, N10, N09	-
-	Selection of override specifications			DWORD	Reset
-					
-	-	0	0	0x01	0/0

Description: The functionality of the override switches can be affected by the bits.

Bit 0: = 0,

Standard: Spindle override active with G331/G332

= 1,

Path override is active instead of spindle override with G331/G332

(Tapping without compensating chuck)

12100	OVR_FACTOR_LIMIT_BIN			EXP, N10	V1,B1,Z1
-	Limitation for binary-coded override switch			DOUBLE	PowerOn
-					
-	-	2.0	0.0	2.0	0/0

Description: This machine data can be used as an additional limit for the override factor when using the binary-coded interface for path, axis and spindle feeds.

In this case, the maximum values

- 200% for channel-specific feed override
- 100% for channel-specific rapid traverse override
- 200% for axis-specific feed override
- 200% for spindle override

are replaced with the limit value entered in MD: OVR_FACTOR_LIMIT_BIN when this value is lower.

Example: OVR_FACTOR_LIMIT_BIN = 1.20

--> maximum override factor for

- channel-specific feed override =120%
- channel-specific rapid traverse override =100%
- axis-specific feed override =120%
- spindle override =120%

This value also defines the dynamic reserves maintained by the speed control for increasing the path and spindle feedrates.

References:

/FB/, B1, "Continuous Path Mode, Exact Stop and Look Ahead"

12200	RUN_OVERRIDE_0			N01, N09	FBMA,V1,Z1
-	Traversing response with override 0			BOOLEAN	PowerOn
-					
-	-	FALSE	-	-	0/0

Description:

= 0

Override 0 is active and means deceleration (JOG mode, safety function).

Bits 0 and 1 in MD32084 $MA_HANDWH_STOP_COND for hand wheels and in MD20624 $MC_HANDWH_CHAN_STOP_COND for machine axes define whether the pulses are collected for geometry axes and contour handwheel.

= 1

Traversing with handwheels and in JOG mode with fixed feedrates is also possible with a 0 % override.

Related to:

MD32084 $MA_HANDWH_STOP_COND

MD20624 $MC_HANDWH_CHAN_STOP_COND

12202	PERMANENT_FEED			N01, N09	Z1,V1
mm/min	Fixed feedrates for linear axes			DOUBLE	Reset
-					
-	4	0.,0.,0.,0.	-	-	0/0

Description:

In AUTOMATIC mode:

After activating a fixed feedrate via an interface signal, traversing is done with a fixed feedrate instead of the programmed feedrate.

Note:

The fixed feedrate is also evaluated in continuous-path mode in order to optimize the overhead for the Look Ahead calculation. Unnecessarily high values should therefore be avoided. Enter zero if a fixed feedrate is not wanted

In JOG mode:

After activating a fixed feedrate via an interface signal, and traversing the linear axis with a traversing key, traversing proceeds in the selected direction with the fixed feedrate.

n = 0, 1, 2, 3 mean fixed feedrates 1, 2, 3, 4. The values must be entered in ascending order.

Special cases, errors, ...

The maximum velocity defined by MD32000 $MA_MAX_AX_VELO is active. An override setting of 100 % is assumed. MD12200 $MN_RUN_OVERRIDE_0 is active if the override is 0.

Related to:

MD12200 $MN_RUN_OVERRIDE_0

12204	PERMANENT_ROT_AX_FEED			N01, N09	V1
rev/min	Fixed feedrates for rotary axes			DOUBLE	Reset
-					
-	4	0.,0.,0.,0.	-	-	0/0

Description:

Fixed feedrate values:

In AUTOMATIC mode:

After activating a fixed feedrate via an interface signal, traversing is done with a fixed feedrate instead of the programmed feedrate.

Note: PERMANENT_ROT_AX_FEED is used instead of PERMANENT_FEED for the path motion if all synchronously traversed axes in the current block are rotary axes. PERMANENT_FEED applies if linear and rotary axes are to be synchronously traversed together.
The fixed feedrate is also evaluated in continuous-path mode in order to optimize the overhead for the Look Ahead calculation. Unnecessarily high values should therefore be avoided. Enter zero if a fixed feedrate is not wanted
In JOG mode:
After activating a fixed feedrate via an interface signal, and traversing the rotary axis with a traversing key, traversing proceeds in the selected direction with the fixed feedrate.
n = 0, 1, 2, 3 mean fixed feedrates 1, 2, 3, 4.
Special cases, errors, ...
The maximum velocity defined by MD32000 $MA_MAX_AX_VELO is active. An override setting of 100 % is assumed. MD12200 $MN_RUN_OVERRIDE_0 is active if the override is 0.
Related to:
MD12200 $MN_RUN_OVERRIDE_0

12205	PERMANENT_SPINDLE_FEED			N01, N09	FBMA
rev/min	Fixed feedrates for spindles			DOUBLE	Reset
-					
-	4	0.,0.,0.,0.	-	-	0/0

Description: Fixed feedrate values:
JOG: A spindle is traversed with a fixed feedrate by activating the traversing keys and activating the appropriate signals in the PLC interface.
The override is not active.
Depending upon MD12200 $MN_RUN_OVERRIDE_0, traversing also takes place with override 0.
The value defined by MD32000 $MA_MAX_AX_VELO is taken as the upper limit. If the fixed feedrate has a larger value, the aforementioned limiting value applies.

12300	CENTRAL_LUBRICATION			N01, N09	-
-	Central lubrication active			BOOLEAN	PowerOn
-					
-	-	FALSE	-	-	0/0

Description: When a settable axial path has been exceeded, the axial VDI signals request a lubrication pulse from the PLC (compare MD33050 $MA_LUBRICATION_DIST). These axial pulses act (by default) independently of each other.
If the machine construction requires a central lubrication, i.e. the lubrication pulse of any axis is acting on all axes, the corresponding path monitoring of all axes must be restarted after lubrication pulse output. This start synchronization of the monitoring is executed via MD12300 $MN_CENTRAL_LUBRICATION=TRUE.

12970	PLC_DIG_IN_LOGIC_ADDRESS			N10	-
-	Logical start address of the digital PLC input address			DWORD	PowerOn
-					
-	-	0	0	1023	0/0

Description: Logical start address of the digital input addresses of the PLC
Related to:
MD12971 $MN_PLC_DIG_IN_NUM

12971	PLC_DIG_IN_NUM			N10	-
-	Number of digital input addresses			DWORD	PowerOn
-					
-	-	256	1	256	0/0

Description: Number of digital input addresses as from the start address
Related to:
MD12970 $MN_PLC_DIG_IN_LOGIC_ADDRESS

12974	PLC_DIG_OUT_LOGIC_ADDRESS			N10	-
-	Logical start address of the digital PLC output addresses			DWORD	PowerOn
-					
-	-	0	0	1023	0/0

Description: Logical start address of the digital output addresses of the PLC
Related to:
MD12975 $MN_PLC_DIG_OUT_NUM

12975	PLC_DIG_OUT_NUM			N10	-
-	Number of digital output addresses			DWORD	PowerOn
-					
-	-	256	1	256	0/0

Description: Number of digital output addresses as from the start address

12978	PLC_ANA_IN_LOGIC_ADDRESS			N10	-
-	Logical start address of the analog PLC input addresses			DWORD	PowerOn
-					
-	-	0	0	1023	0/0

Description: Logical start address of the analog input addresses of the PLC
Related to:
MD12979 $MN_PLC_ANA_IN_NUM

12979	PLC_ANA_IN_NUM			N10	-
-	Number of analog input addresses			DWORD	PowerOn
-					
-	-	0	0	1023	0/0

Description: Number of analog input addresses as from the start address
Related to:
MD12978 $MN_PLC_ANA_IN_LOGIC_ADDRESS

12982	PLC_ANA_OUT_LOGIC_ADDRESS			N10	-
-	Logical start address of the analog PLC output addresses			DWORD	PowerOn
-					
-	-	0	0	1023	0/0

Description: Logical start address of the analog output addresses of the PLC
Related to:
MD12983 $MN_PLC_ANA_OUT_NUM

12983	PLC_ANA_OUT_NUM			N10	-
-	Number of analog output addresses			DWORD	PowerOn
-					
-	-	0	0	1023	0/0

Description: Number of analog output addresses as from the start address
Related to:
MD12982 $MN_PLC_ANA_OUT_LOGIC_ADDRESS

12986	PLC_DEACT_IMAGE_LADDR_IN			N10	-
-	Deactivation of I/O connection to the PLC image			DWORD	PowerOn
-					
-	8	0,9,18,27,36,96,112,-1	-1	255	1/1

Description: The PLC input/output image of the stations with these logical addresses is not connected to the real I/Os

12987	PLC_DEACT_IMAGE_LADDR_OUT			N10	-
-	Deactivation of I/O connection to the PLC image			DWORD	PowerOn
-					
-	8	-1,-1,-1,-1,-1,-1,-1,-1	-1	255	1/1

Description: The PLC input/output image of the stations with these logical addresses is not connected to the real I/Os

13050	DRIVE_LOGIC_ADDRESS			N04, N10	G2
-	Logical drive addresses			DWORD	PowerOn
-					
-	31	4100,4140,4180,4220, 4260,4300,450...	258	8191	0/0

Description: For PROFIdrive only:
Logical I/O addresses of the PROFIdrive drives on the PROFIBUS/PROFINET. An address is assigned to a drive.
This MD is the link to the description of the PROFIBUS/PROFINET configuration in SDB.
The MD value is the address index of the logical I/O drive address assigned with HW-Config (SIMATIC Manager S7).
Example:
DRIVE_LOGIC_ADDRESS[1] = 272 (The start address 272 is assigned to drive 1.)
The SDB defines the logical I/O address of the drives on the PROFIBUS/PROFI-NET. An address is assigned to a drive or to a slave.
The address index is used for actual-value and setpoint-value assignment (MD30220 $MA_ENC_MODULE_NR[n], MD30110 $MA_CTRLOUT_MODULE_NR[n]).
Note:
The same drive (I/O address) must be assigned to the MD30220 $MA_ENC_MODULE_NR[0] and MD30110 $MA_CTRLOUT_MODULE_NR[0] of a machine axis.
Each drive or slave must be assigned to a single logical address index.
The index [n] of the machine data has the following coding: [Drive index]:
Drive 1 -->n-=0
Drive 2 -->n-=1,

13060	DRIVE_TELEGRAM_TYPE			N04, N10	G2
-	Standard message frame type for PROFIdrive			DWORD	PowerOn
-					
-	31	116,116,116,116,116,116,102,102,102...	-	-	2/2

Description: Telegram type has to be indicated for every drive:
102:
10: - spindle with direct measuring system
Machine date index [n] has the following coding: [drive index]:
n=0: drive number 1
n=1: drive number 2 etc.

13070	DRIVE_FUNCTION_MASK			N04, N10	G2
-	PROFIdrive expansion functions			DWORD	PowerOn
-					
-	31	2,2,2,2,2,2,0,0,0,0,0,0	-	-	2/2

Description: For PROFIdrive only:
Bit-coded mask for skipping the scope of available functions for PROFIdrive axes expected by the NCK.
Meaning of set bits:
Bit 0:Deactivation of axial drive alarm display
Note: the effect of this bit may be hidden, depending on the value in MD13140 $MN_PROFIBUS_ALARM_ACCESS.
Bit 1:Deactivation of 611U description file intermediate storage in the NCK
Bit 2:Deactivation of axial encoder driver parameter accesses
Bit 3:Deactivation of axial output driver parameter accesses
Bit 4:Reserved, free (previously activation of DSC bits)
Bit 5:Deactivation of the 611U-specific drive parking (STW2.7/STA2.7)
Bit 6:Deactivation of the 611U-specific travel to fixed stop (STW2.8/STA2.8)
Bit 7:Deactivation of the 611U-specific motor switching int. (STW2.9 to 2.11)
Bit 8:Deactivation of the 611U-specific ramp block (STW1.11+13)
Bit 9:Deactivation of the 611U-specific function generator bits (STW1.8/STA1.13)
Bit 10:Deactivation of the control of the holding brake (STW1.12 / STA2.5)
Bit 11:Deactivation of the effect of OFF2/OFF3 on V390x 4001.5 (Drive Ready)
Bit 12:Deactivation of the error/warning class SINAMICS (STA1.11 to STA1.12)
Bit 13:Drive parking simulation (STA2.7 = STW2.7)
Bit 14:Selection of non-cyclical communication 0 = DPT 1 = DPV1
Bit 15: Deactivation of the consistency check of the PROFIdrive message frame configuration
Configuration of bits 5 - 10, which is new for SW 6.3 and higher, allows adaptation of certain control or status bits that are not standardized in the PROFIdrive profile. The bits may have a different significance and effect in the default setting of third-party drives.

13080	DRIVE_TYPE_DP			EXP	G2
-	PROFIBUS/PROFINET drive type			BYTE	PowerOn
-					
-	31	0,0,0,

13113	PROFIBUS_TRACE_START			EXP	-
-	Activation of PROFIBUS/PROFINET trace			DWORD	Immediately
-					
-	-	0	0	1	1/1

Description: For PROFIBUS/PROFINET only:
0: Trace off
1: Trace on
MD13112 $MN_PROFIBUS_TRACE_FILE_SIZE > 0: Trace is automatically disabled when the file size is reached.

13114	PROFIBUS_TRACE_START_EVENT			EXP	-
-	Trigger conditions for PROFIBUS/PROFINET trace			DWORD	NEW CONF
-					
-	14	0,0,0,0,0,0,0,0,0,0,0,0,0,0	0x00000000	0x111fffff	1/1

Description: For PROFIBUS/PROFINET only:
The trigger frequency is configured bit-by-bit
Bits 0-15: 0x0001-0xffff: bit mask
Bits 16-23: 0x01-0x14: process data number (a maximum of 20 words are permissible)
Bits 24-27:0x01: status change 0->1
0x00: status change 1->0
Bits 28-31:0x10: send slot
0x00: receive slot
When MD13113=1 and MD13114=0x0 Recording starts immediately
When MD13113=1 and MD13114=0x1 Recording starts on control power on
When MD13113=1 and MD13114=0x2 Recording starts on loss of the sign of life

13120	CONTROL_UNIT_LOGIC_ADDRESS			N04, N10	-
-	Logical address of SINAMICS CU			DWORD	PowerOn
-					
-	7	6500,0,0,0,0,0,0	0	8191	2/2

Description: For PROFIBUS/PROFINET, SINAMICS:
Logical I/O address of a SINAMICS-CU (Control Unit) on the PROFIBUS/PROFINET. The cyclic DP communication with SINAMICS-CU is activated by taking over the associated slot address from the STEP7 project. The onboard I/Os cannot be accessed until after configuration.

13140	PROFIBUS_ALARM_ACCESS			N04, N10	-
-	Alarm response of PROFIBUS/PROFINET drives on power up			DWORD	Immediately
-					
-	-	1	0	2	1/7

Description: For PROFIBUS/PROFINET only:
Specifies the time of activation for evaluation/transmission of PROFIBUS/PROFINET node alarms or warnings
(fine diagnostics messages) on the NCK.
Affects drive alarms or warnings 380500, 380501
(or alarms 200000ff etc. created from these in the HMI)
as well as drive safety alarms 27900.

```
Meaning of the MD values:
0 = alarms/warnings are evaluated immediately
1 = alarms/warnings are not evaluated
2 = alarms are evaluated only after power up, i.e.
    as soon as HMI has set value 2 active again (NCK automatically
    resets the MD value to 1 at every power up; HMI must
    explicitely articulate its readiness for message processing
    by setting value 2)
Note: the MD restricts the range or effectiveness
         of MD13150 $MN_SINAMICS_ALARM_MASK
Default: the display default behavior of the mentioned drive
         alarms changes with the introduction of this MD.
         Now the alarms are not transported and displayed
         by default.
         The previous default behavior can be restored
         with MD13140 $MN_PROFIBUS_ALARM_ACCESS=0.
```

13150	SINAMICS_ALARM_MASK			N04, N05	-
-	Activate fault and warning buffer output for Sinamics			DWORD	Immediately
-					
-	-	0x0909	-	-	1/1

Description:

```
For PROFIBUS/PROFINET only, especially SINAMICS:
Relevant to SINAMICS diagnostics:
Note: the effect of this MD may be hidden independently of
         the value of $MN_PROFIBUS_ALARM_ACCESS.
Mask for displaying the SINAMICS DOS fault and warning buffers
Bit set:Alarms in this DO group are output
Bit not set:Alarms in this DO group are not output
Bit  Hex. Meaning
   value
================================================================================
========
0:   0x1 Output faults of the Control Units
1:   0x2 Reserved
2:   0x4 Output faults of the Drive Controls
3:   0x8 Output faults of the Line Modules
4:   0x10 Output faults of the Terminal Boards
5:   0x20 Output faults of the Terminal Modules
8:   0x100 Output warnings of the Control Units
9:   0x200 Output warnings of the Communication Objects
10:  0x400 Output warnings of the Drive Controls
11:  0x800 Output warnings of the Line Modules
12:  0x1000 Ouptut warnings of the Terminal Boards
13:  0x2000 Output warnings of the Terminal Modules
```

13200	MEAS_PROBE_LOW_ACTIVE			N10, N09	M5
-	Polarity reversal of sensor			BOOLEAN	PowerOn
-					
-	2	FALSE,FALSE	-	-	3/3

Description:

```
0: Non-deflected state        0 V
   Deflected state           24 V
1: Non-deflected state       24 V
   Deflected state            0 V
```

13210	MEAS_TYPE			N10, N09	M5
-	Meas. type with decentralized drives			BYTE	PowerOn
-					
-	-	1	0	1	0/0

Description:

```
For PROFIdrive only:
This MD sets the measuring function of decentralized drives.
The MD currently only functions for PROFIdrive drives.
MEAS_TYPE = 0 defines:
A probe is used that is connected centrally to the NC.
However, as the encoders only provide actual position values in cycles, the
actual measuring position is found by interpolation.
MEAS_TYPE = 1 defines:
The probe must be wired decentralized to ALL drives.
The measuring functionality of the drive is then used,
saving the actual encoder values in the hardware at the time of the measuring
edge.
This method is more accurate than that with MEAS_TYPE = 0, but it requires a
more complex wiring and drives that support this measuring functionality
(e.g. 611U).
```

13211	MEAS_CENTRAL_SOURCE			N10, N09	-
-	Data source central measurement with PROFIBUS/ PROFINET drives			BYTE	PowerOn
-					
-	-	3	1	3	0/0

Description:

```
For PROFIBUS/PROFINET only:
This MD is used to set the method used to obtain the time stamps for central
measurement with PROFIdrive drives.
The following applies if MEAS_CENTRAL_SOURCE = 1:
  NRK accesses are used to access the onboard measuring registers.
  For this purpose, the appropriate hardware which allows this must be
  available, e.g. 840Di with MCI extension board.
The following applies if MEAS_CENTRAL_SOURCE = 2:
  The SINAMICS DO1 telegram is used (telegram type 391),
  variant "Cyclic measurement" without
  handshake.
  For this purpose, an integrated SINAMICS must be available, e.g. NCU 710.
  (Not available until supported by SINAMICS).
```

The following applies if MEAS_CENTRAL_SOURCE = 3:
The SINAMICS DO1 telegram is used (telegram type 391),
in the variant with handshake. This procedure is
fault-tolerant, however, allows a measuring edge only every 4 PROFIBUS/PROFINET
cycles, i.e. it is considerably slower.
For this purpose, an integrated SINAMICS must be available, e.g. NCU 710.
This MD is only relevant, if MD13210 $MN_MEAS_TYPE == 0.

13220	MEAS_PROBE_DELAY_TIME			N10, N09	FBA/IAD
s	Delay time between probe deflection and recognition			DOUBLE	PowerOn
-					
-	2	0.0,0.0	0	0.1	3/3

Description: For probes with e.g. radio transmission, the probe deflection can be detected in the NC only with delay.
With this MD, the transmission link delay between the probe deflection and its detection is set in the control.
The measured value is corrected internally by the control by the distance that corresponds to the traversing motion during this time before measuring (modeling).
It is practicable to set values only up to a maximum of 15 position controller cycles.
Anyhow, the modeling could not work with the expected accuracy with values greater than that. In this case, the input value is therefore limited internally by the software to 15 position controller cycles (without any further feedback).

13230	MEAS_PROBE_SOURCE			N10, N09	-
-	Probe simulation			BYTE	PowerOn
-					
-	-	0	0	8	7/2

Description: Simulation of the probe only works when all axes are simulated.
Value = 0: the probe is triggered on the programmed end position.
Value > 0: the probe is triggered via digital output with the number=value.

13231	MEAS_PROBE_OFFSET			N10, N09	-
mm/inch, degrees	Probe offset			DOUBLE	Immediately
-					
-	-	0.1	-	-	7/7

Description: The switching position of the probe is offset by the value.
The offset is only active with the simulated probes and MD 13230=0.

14504	MAXNUM_USER_DATA_INT			N03	P3
-	Number of user data (INT)			DWORD	PowerOn
-					
-	-	32	0	256	0/0

Description: Number of NC/PLC user data of type INT

14506	MAXNUM_USER_DATA_HEX			N03	P3
-	Number of user data (HEX)			DWORD	PowerOn
-					
-	-	32	0	256	0/0

Description: Number of NC/PLC user data (HEX)

14508	MAXNUM_USER_DATA_FLOAT			N03	P3
-	Number of user data (FLOAT)			DWORD	PowerOn
-					
-	-	8	0	32	0/0

Description: Number of NC/PLC user data of type FLOAT

14510	USER_DATA_INT			N03	P3
-	User data (INT)			DWORD	PowerOn
-					
-	32	0,0,0,

15700	LANG_SUB_NAME			N01	K1
-	Name for substitution subroutine			STRING	PowerOn
-					
-	-		-	-	2/2

Description: Name of the user program called on the basis of a substitution configured by MD30465 $MA_AXIS_LANG_SUB_MASK.
The user program is called with the path configured by MD15702 $MN_LANG_SUB_PATH.

15702	LANG_SUB_PATH			N01	K1
-	Call path for substitution subroutine			BYTE	PowerOn
-					
-	-	0	0	2	2/2

Description: Path with which the user program set by MD15700 $MN_LANG_SUB_NAME is called on the basis of a substitution configured by MD30465 $MA_AXIS_LANG_SUB_MASK:
0: /_N_CMA_DIR (default)
1: /_N_CUS_DIR
2: /_N_CST_DIR

17200	GMMC_INFO_NO_UNIT			EXP	K1
-	Global HMI information (without physical unit)			DOUBLE	PowerOn
-					
-	16	3.,4.,3.,1.,0.,0.,0.,0.,0., 0.,0.,0.,0....	-	-	0/0

Description: The HMI stores the global display machine data
- $MM_DISPLAY_RESOLTION
- $MM_DISPLAY_RESOLTION_INCH
- $MM_SPIND_DISPLAY_RESOLUTION
- $MM_MA_COORDINATE_SYSTEM

in the NCK machine data from MD17200 $MN_GMMC_INFO_NO_UNIT[0] to MD17200 $MN_GMMC_INFO_NO_UNIT[3]. This enables these display machine data to be accessed from the NCK.

17201	GMMC_INFO_NO_UNIT_STATUS			EXP	K1
-	Global HMI status info (without physical unit)			BYTE	PowerOn
-					
-	16	1,1,1,1,0,0,0,0,0,0,0,0, 0,0,0,0	-	-	0/0

Description: Value 0: input not assigned
Value 1: input assigned

17400	OEM_GLOBAL_INFO			A01, A11	-
-	OEM version information			STRING	PowerOn
-					
-	5		-	-	2/2

Description: A version information freely available to the user
(is indicated in the version screen)

17500	MAXNUM_REPLACEMENT_TOOLS			N09	FBW
-	Maximal number of replacement tools.			DWORD	PowerOn
-					
-	-	1	0	32	0/0

Description: Only relevant if the tool management function is active.
Only relevant if the tool management (TMMA) function or the tool monitoring function (TMMO) is active.
0: The number of replacement tools is not monitored.
1: Exactly one replacement tool may be assigned to an identifier.
The data does not influence the memory requirement. It is solely for monitoring purposes.
Related to:
MD18080 $MN_MM_TOOL_MANAGEMENT_MASK,
MD20310 $MC_TOOL_MANAGEMENT_MASK

17515	TOOL_RESETMON_MASK			N09	-
-	Tool data behavior with RESETMON			DWORD	PowerOn
-					
-	-	0x14	0	0x49F	0/0

Description: The 5th parameter of the RESETMON command defines which tool status is to be reset. If the 5th parameter is omitted, it is replaced by the value in this MD. With the PI service "_N_TRESMON", work is always done with this value. In that case, the bits are always assigned as the bits in the tool status $TC_TP8[x].
Bit no.: 0 Bit value: 0 hex value: -
Meaning: Tool status "active" remains unchanged
Bit no.: 0 Bit value: 1 hex value: 'H1'
Meaning: Tool status "active" is deleted
Bit no.: 1 Bit value: 0 hex value: -
Meaning: Tool status "released" remains unchanged
Bit no.: 1 Bit value: 1 hex value: 'H2'
Meaning: Tool status "released" is set
Bit no.: 2 Bit value: 0 hex value: -
Meaning: Tool status "locked" remains unchanged
Bit no.: 2 Bit value: 1 hex value: 'H4'
Meaning: Tool status "locked" is deleted, if this is permitted by the monitoring data and the 4th parameter is set correspondingly.
Bit no.: 3 Bit value: 0 hex value: -
Meaning: Tool status "measure" remains unchanged
Bit no.: 3 Bit value: 1 hex value: 'H8'
Meaning: Tool status "measure" is set.
Bit no.: 4 Bit value: 0 hex value: -
Meaning: Tool status "prewarning limit" remains unchanged
Bit no.: 4 Bit value: 1 hex value: 'H10'
Meaning: Tool status "prewarning limit" is deleted, if this is permitted by the monitoring data and the 4th parameter is set.
Bit no.: 5 Not permitted (tool status "tool is being changed")
Bit no.: 6 Not permitted (tool status "tool is fixed-location-coded")
Bit no.: 7 Bit value: 0 hex value: -
Meaning: Tool status "was in use" remains unchanged
Bit no.: 7 Bit value: 1 hex value: 'H80'
Meaning: Tool status "was in use" is deleted

Bit no.: 8 Bit value: 0 Not permitted (tool status "is in retract")
Bit no.: 9 Bit value: 0 hex value: -
Meaning: Tool status "locked is ignored" remains unchanged
Bit no.: 9 Bit value: 1 hex value: 'H200'
Meaning: Tool status "locked is ignored" is deleted
Bit no.: 10 Bit value: 0 hex value: -
Meaning: Tool status "to unload" remains unchanged
Bit no.: 10 Bit value: 1 hex value: 'H400'
Meaning: Tool status "to unload" is deleted
Bit no.: 11 Not permitted (tool status "to load")
Bit no.: 12 Bit value: 0 Not permitted (tool status "master tool")
Bit no.: 13 Not permitted (reserved)
The default setting corresponds to the previous behavior.
Impermissible bits are filtered and not displayed in the limit mask.
Bits not defined here are ignored when writing the machine data.

17520	TOOL_DEFAULT_DATA_MASK			N09	FBW
-	Create new tool: default settings			DWORD	PowerOn
-					
-	-	0x5	0	0x1F	1/1

Description:

When defining a tool for the first time, certain data of the tool can be set to fixed default values. This can prevent simple applications from dealing with data which do not necessarily have to be assigned individual values.
Bit no.: 0 Bit value: 0 Hex value: -
Meaning: Default value of tool status ($TC_TP8), bit1=0 = 'not released'
Bit no.: 0 Bit value: 1 Hex value: 'H1'
Meaning: Default value of tool status ($TC_TP8), bit1=1 = 'released'
Bit no.: 1 Bit value: 0 Hex value: -
Meaning: Default value of tool status ($TC_TP8), bit6=0 = 'not fixed-location-coded'
Bit no.: 1 Bit value: 1 Hex value: 'H2'
Meaning: Default value of tool status ($TC_TP8), bit6=1 = 'fixed-location-coded'
Bit no.: 2 Bit value: 0 Hex value: -
Meaning: The tool is only accepted in the tool group when the explicit write command is used for the tool name. Only then can it be loaded via programming.
Bit no.: 2 Bit value: 1 Hex value: 'H4'
Meaning: The tool is automatically accepted in the tool group corresponding to the tool name when it is defined for the first time. The tool can then be changed using the default name ("t" = t-No.).
The term 'tool name' ($TC_TP2) can be hidden from the user. (This only makes sense if you do not use replacement tools or if the tool name is not written explicitly, as this may give rise to data consistency problems.)
Bit no.: 3 Bit value: 0 Only with TMMG: Default value of location type ($TC_TP7) = 9999 =not defined
Bit no.: 3 Bit value: 1 Hex value: 'H8'
Meaning: Only with TMMG: Default value of location type ($TC_TP7) = 1 and consequently the default value of magazine location type ($TC_MPP2) = 1. This means that all magazine locations can accept all tools.
Bit no.: 4 Bit value: 0 Hex value: -
Meaning: Only with TMMG + active consider adjacent location: With SET/RESET of the magazine location status 'disabled', the magazine location status 'Overlapping allowed' remains unchanged.

Bit no.: 4 Bit value: 1 Hex value: 'H10'
Meaning: Only with TMMG + active consider adjacent location: With SET/RESET of the magazine location status 'disabled' the magazine location status 'Overlapping allowed' occurs automatically with SET/RESET.

17530	TOOL_DATA_CHANGE_COUNTER			EXP, N01	FBW
-	Mark tool data change for HMI			DWORD	PowerOn
-					
-	-	0	0	0x1F	2/2

Description: HMI display support. This data enables individual data to be explicitly taken into account or not taken into account in the OPI variables (block C/S) tool-Counter, toolCounterC, toolCounterM.
Bit no.: 0 Bit value: 0 Hex value: -
Meaning: Changes to the values of the tool status ($TC_TP8) are not taken into account in toolCounterC
Bit no.: 0 Bit value: 1 Hex value: 'H1'
Meaning: Changes to the values of the tool status ($TC_TP8) are taken into account in toolCounterC
Bit no.: 1 Bit value: 0 Hex value: -
Meaning: Changes to the values of the remaining number of tools ($TC_MOP4) are not taken into account in toolCounterC
Bit no.: 1 Bit value: 1 Hex value: 'H2'
Meaning: Changes to the values of the remaining number of tools ($TC_MOP4) are taken into account in toolCounterC
Bit no.: 2 Bit value: 0 Hex value: -
Meaning: Changes to the values of the tool data are not taken into account in the tool data update service
Bit no.: 2 Bit value: 1 Hex value: 'H4'
Meaning: Changes to the values of the tool data are taken into account in the tool data update service
Bit no.: 3 Bit value: 0 Hex value: -
Meaning: Changes to the values of the magazine data are not taken into account in the tool data update service
Bit no.: 3 Bit value: 1 Hex value: 'H8'
Meaning: Changes to the values of the magazine data are taken into account in the tool data update service.
Bit no.: 4 Bit value: 0 Hex value: -
Meaning: Changes to the values of the ISO tool offset data are not taken into account in the tool data update service
Bit no.: 4 Bit value: 1 Hex value: 'H10' Meaning: Changes to the values of the ISO tool offset data are taken into account in the tool data update service
The statements "Changes to the values of the tool status" and "Changes to the values of the remaining number of tools" refer not only to value changes effected by internal processes in the NC but also to value changes produced by writing the corresponding system variables.

17540	TOOLTYPES_ALLOWED			N09	-
-	Permitted tool types			DWORD	PowerOn
-					
-	-	0x3FF	0	0x3FF	0/0

Description: Definition of the tool types permitted in NCK (see $TC_DP1) with the tool offset selection. That is, tools of any type may be loaded in the NCK; but only the tools types defined here may be defined in the offset defining tool. A bit value = 1 means that the named tool type range is permitted for the offset selection. A bit value = 0 means that the named tool type range is rejected with an offset-capable alarm in the case of an attempted offset selection of a cutting edge of this type. The special value = 0, 9999 for the tool type means "undefined". Tool offsets with this tool type value generally cannot be selected.

Bit no.: 0 value 0x1 means: Tool types 1 to 99 permitted
Bit no.: 1 value 0x2 means: Tool types 100 to 199 permitted (milling tools)
Bit no.: 2 value 0x4 means: Tool types 200 to 299 permitted (drilling tools)
Bit no.: 3 value 0x8 means: Tool types 300 to 399 permitted
Bit no.: 4 value 0x10 means: Tool types 400 to 499 permitted (grinding tools)
Bit no.: 5 value 0x20 means: Tool types 500 to 599 permitted (turning tools)
Bit no.: 6 value 0x40 means: Tool types 600 to 699 permitted
Bit no.: 7 value 0x80 means: Tool types 700 to 799 permitte
Bit no.: 8 value 0x100 means: Tool types 800 to 899 permitted
Bit no.: 9 value 0x200 means: Tool types 900 to 999 permitted
Related to:
MD18100 $MN_MM_NUM_CUTTING_EDGES_IN_TOA

17600	DEPTH_OF_LOGFILE_OPT			EXP, N01	-
-	Depth of log memory optimization in REORG			DWORD	Reset
-					
-	-	5	0	300	0/0

Description: The depth of memory optimization in the REORG log file
(=search depth to determine if a parameter to be written is already included in the REORG log file).
The value of the machine data can be increased if alarm 15110 occurs during program execution and if this alarm is to be avoided.
(Alternatively, the size of the REORG log file can be increased with MD28000 $MC_MM_REORG_LOG_FILE_MEM, provided that the operator has the access rights required. This procedure should generally be preferred.)
Value

0 = No optimization,

That is each write operation creates an input into the REORG log file. Writing a variable value is therefore very time-efficient, but requires more memory.

0< n <= Maximum value

When a new variable value is written, the n previously entered write operations (but maximally up to the previous indicatable block) are checked to determine if the parameter now to be written has already been written in the past. If this is the case, a new entry is not made in the REORG log file.

If this is not the case, an entry is made. A variable value can therefore be written in a very memory-efficient way, but requires more time.

```
Example:
MD17600 $MN_DEPTH_OF_LOGFILE_OPT is assumed to be 5 and the following would
be a typical program sequence:
x10     ; Executable NC block
r1=1    ; The first write command since x10
        ; -> Save old value in log file. 1st entry
r2=1    ; Determine that r2 is not yet included
        ; -> Save old value in log file. 2nd entry
r3=1    ; Determine that r3 is not yet included
        ; -> Save old value in log file. 3rd entry
r4=1    ; Determine that r4 is not yet included
        ; -> Save old value in log file. 4th entry
r5=1    ; Determine that r5 is not yet included
        ; -> Save old value in log file. 5th entry
r6=1    ; Determine that r6 is not yet included
        ; -> Save old value in log file. 6th entry
r2=1    ; Determine that r2 is already included
        ; (5th oldest entry) -> no renewed saving
r3=1    ; Determine that r3 is already included
        ; (4th oldest entry) -> no renewed saving
r1=2    ; As MD17600 $MN_DEPTH_OF_LOGFILE_OPT = 5 it is not detected that
        ; r1 is already included
        ; (6th oldest entry) -> save old value in log file.
        ; 7th entry
x20     ; Executable NC block
r1=3    ; The first write command since x20
        ; -> Save old value in log file. 1st entry
r1=4    ; Determine that r1 is already included
        ; (Only one entry) -> no renewed saving
The setting of the MD is particularly useful if a small number of verious
parameters are written frequently (e.g. in a loop) and if alarm 15110 occurs
for this reason.
```

17610	DEPTH_OF_LOGFILE_OPT_PF			EXP, N01	-
-	Depth of the PowerFail log memory optimization			DWORD	Reset
-					
-	3	10,0,0	0	300	1/1

Description:

```
Depth of the memory optimization in the PowerFail log file (=search depth, to
find out
whether a parameter to be written is already included in the PowerFail log
file).
It is possible to increase the value of the machine data if
alarm 15120 occurs during program processing and if you wish to avoid it.
(Alternatively, you can increase the size of the PowerFail log file itself
by means of MD18232 $MN_MM_ACTFILESYS_LOG_FILE_MEM, if you have the necessary
access right
and if the required memory is available.
Value
0  = same effect as value 1.
      Writing of a variable value is therefore very time-efficient at the
      cost of the required memory.
      0< n <= Maximum value
```

= Writing of a new variable value leads, prior to saving of the new variable value in the PowerFail log file, to the last n write operations which have been being checked to see whether the new parameter to be written has already been written once.
If yes, the new value is not entered again in the PowerFail log file, but the old value is overwritten with the new one.
If no, the new value is entered.
At the cost of the required time, writing of a variable value can therefore be designed very memory-efficiently.

Changing of the data can shorten/increase the time requirement of the present application.
Changing of the data can fill the available log buffers faster/more slowly.
Frequent occuring of alarm 15120 -> Increase values for index=0,1,2.
The value indicating the index to be changed can be deducted from the parameter of alarm 15120:
if it is the value for MD18232 $MN_MM_ACTFILESYS_LOG_FILE_MEM[0], then increase the value for index 0;
or increase MD18232 $MN_MM_ACTFILESYS_LOG_FILE_MEM[0] itself.
Index Meaning
0 Search depth in preprocessing buffer
1 Search depth in buffer for data changes within the range of tool change
2 Search depth in buffer for data changes of main processing (especially synchronized actions)

17900	VDI_FUNCTION_MASK			EXP, N09	H1
-	Setting to VDI signals			DWORD	PowerOn
-					
-	-	0x0	0	0x1	0/0

Description:

Settings for VDI signals:
Bit 0 == 0:
The VDI signals motion command + / motion command - are already issued if there is a travel request (default).
Bit 0 == 1:
The VDI signals motion command + / motion command - are issued only if the axis actually moves.

2.2.3 System specific memory settings

18000	VDI_UPDATE_IN_ONE_IPO_CYCLE			EXP, N01	P3
-	PLC interface update			BOOLEAN	PowerOn
-					
-	-	TRUE	-	-	0/0

Description: 1: Complete reading/writing of the VDI interface in one IPO cycle
0: Complete reading/writing of the VDI interface in two IPO cycles

18030	HW_SERIAL_NUMBER			N05	-
-	Hardware series number			STRING	PowerOn
-					
-	1		-	-	2/RO

Description: During power on of the control, a unique hardware serial number is stored in this MD:
- For Powerline series modules this is the serial number of the NCU module
- For Solutionline series modules this is the serial number of the CF card, or the unique number of the MCI module in the case of PC-based systems

This data cannot be written.

18040	VERSION_INFO	N05	IAD
-	Version and possibly data of the PCMCIA card, not FM-NC	STRING	PowerOn
-			

Description: Version identifiers of the system software
The identifiers of the PCMCIA card (assigned by the configuration management) and the 'system_date_time' from the NCK are stored in this MD during control power on. A unique assignment can always be made with this data from the MD block (startup file or INITIAL_INI) to a software release.

18050	INFO_FREE_MEM_DYNAMIC			N01, N02, N05	S7
-	Display data of free dynamic memory			DWORD	PowerOn
-					
-	-	1572864	-	-	1/1

Description: The data is used for
a) the manufacturer's presetting of the memory size [bytes] available to the user for each channel after cold restart.
b) Displaying the available dynamic memory [bytes]
The data cannot be written.
The contents of the data state how much unbuffered memory is available per channel for increasing the unbuffered user data storage area via MD.
One should check whether the available memory is sufficient before increasing, for example, the number of LUDs, number of functional parameters, or the size of the IPO buffer.
If necessary, proceed step by step:
- increase by 1, note (old) value
- NCK startup (= 'warm start' or NCK reset), read off new value
- memory requirement = new value - old value

On the first NCK startup or cold restart of the control (=deletion of user data), MD18210 $MN_MM_USER_MEM_DYNAMIC is set by the NCK software so that at least the preset value results for MD18050 $MN_INFO_FREE_MEM_DYNAMIC.
That is, the value is automatically increased if the initial value of MD18210 $MN_MM_USER_MEM_DYNAMIC is too low.

The following also applies to multichannel systems:

- The preset value applies to each possible channel. That is, if there are ten possible channels, MD18210 $MN_MM_USER_MEM_DYNAMIC is set by the NCK SW so that at least the 'preset value* ten' results for MD18050 $MN_INFO_FREE_MEM_DYNAMIC.
- On activation of a channel, MD18210 $MN_MM_USER_MEM_DYNAMIC is increased if necessary so that the memory free at the time of activation continues to be free (provided that the memory structure permits this) after the channel has become active.
- The activation of the maximum possible number of axes is ensured by increasing the data MD18210 $MN_MM_USER_MEM_DYNAMIC if necessary so that memory free at the time of activation continues to be free (provided that the memory structure permits this) after the axis has become active.

'If necessary' in the previous sentences means that the adjustment is automatic if the channel/axis could not be activated with the current values of MD18210 $MN_MM_USER_MEM_DYNAMIC/$MN_INFO_FREE_MEM_DYNAMIC.

18060	INFO_FREE_MEM_STATIC			N01, N02, N05	S7
-	Display data of free static memory			DWORD	PowerOn
-					
-	-	524288	-	-	1/1

Description:

The following applies to powerline control models:
Output of the buffered memory available in the passive file system [bytes].
The data cannot be written.
The preset value states the minimum number of bytes available to the user when the NCK starts up with a cold restart.
The contents of the data state how much battery-backed memory is available for the passive file system at the time of startup.
After a non-buffered startup, the maximum memory available in the file system can be read.
If MDs that affect the requirement for buffered memory (e.g. MM_NUM_GUD_VALUES_MEM, MD38000 $MA_MM_ENC_COMP_MAX_POINTS) are changed then this changes the amount of memory available for the passive file system, as the amount of memory allocated to the passive file system consists of MD18230 $MN_MM_USER_MEM_BUFFERED minus all other buffered user data.
(See also the document on MD18350 $MN_MM_USER_FILE_MEM_MINIMUM)
At the first NCK startup or cold restart of the control (=deletion of user data) MD18230 $MN_MM_USER_MEM_BUFFERED is set by the NCK software so that at least the default value results for MD18060 $MN_INFO_FREE_MEM_STATIC.
That is MD18230 $MN_MM_USER_MEM_BUFFERED is automatically increased if its initial value is too low.
The following applies to solution line control models:
The data reserves the available memory for the data that are not the passive file system.
(MD18350 $MN_MM_USER_FILE_MEM_MINIMUM[0] dimensions the passive file system.)
Machine data for setting the active file system (tools, GUDs, ...) can be increased until this memory has all been allocated.

18070	INFO_FREE_MEM_DPR			EXP, N01, N02, N05	S7
-	Display data of free memory in DUAL PORT RAM			DWORD	PowerOn
-					
-	-	0	-	-	-1/RO

Description: Output of the available memory in the Dual Port RAM (Bytes).
The data cannot be written.

18075	MM_NUM_TOOLHOLDERS			N02, N09	/FBW/, "Description of Functions, Tool Management"
-	Max. number of tool holders per TOA			DWORD	PowerOn
-					
802d-cu3	-	3	1	5	-1/1
802d-ng2	-	3	1	5	-1/1
802d-ng3	-	3	1	5	-1/1
802d-tm1	-	1	1	4	-1/1
802d-tm2	-	2	1	5	-1/1
802d-tm3	-	2	1	5	-1/1

Description: Max. number of definable tool holders per TO range.
The address extension e of commands Te=t, Me=6 (*) is the number of the tool holder.
t=T number/tool name - depending on the function activated in the NCK.
(*) if: MD22550 $MC_TOOL_CHANGE_MODE=1 and MD22560 $MC_TOOL_CHANGE_M_CODE=6 applies
Normally the tool holder of milling machines is a spindle.
Also see MD20090 $MC_SPIND_DEF_MASTER_SPIND.
For turning machines the tool holder normally is not a spindle axis.
Also see MD20124 $MC_TOOL_MANAGEMENT_TOOLHOLDER.
In this case it should reasonably apply that MD18075 $MN_MM_NUM_TOOLHOLDERS is larger or equal to MD20090 $MC_SPIND_DEF_MASTER_SPIND/MD20124 $MC_TOOL_MANAGEMENT_TOOLHOLDER.
If bit 0 = 1 in MD18080 $MN_MM_TOOL_MANAGEMENT_MASK and MD20310 $MC_TOOL_MANAGEMENT_MASK is set (=magazine management (TOOLMAN))
it will apply for reasonable values that MD18075 $MN_MM_NUM_TOOLHOLDERS is smaller or equal to MD18076 $MN_MM_NUM_LOCS_WITH_DISTANCE.
A maximum of MD18075 $MN_MM_NUM_TOOLHOLDERS intermediate memory locations of the type spindle
($TC_MPP1[9998,x]=2) can then be defined.
Example: TOOLMAN inactive
MD20090 $MC_SPIND_DEF_MASTER_SPIND shall be =3, MD18075 $MN_MM_NUM_TOOLHOLDERS shall be =3.
Then T1=t, T2=t, T3=t, T=t can be programmed.
Example: TOOLMAN active, milling machine with Me=6 as tool change command
MD18075 $MN_MM_NUM_TOOLHOLDERS shall be = 14, MD18076 $MN_MM_NUM_LOCS_WITH_DISTANCE=20,
10 channels shall be active, all channels have TOOLMAN active and have the same tool and magazine data
(=one TO range for all channels). MD20090 $MC_SPIND_DEF_MASTER_SPIND=1,.....10 for the channels.
Then up to 14 locations of the kind 'tool holder'/'spindle' can be defined in the intermediate magazine memory.

Additional 6 grippers or others can be defined.
These 20 locations max. can be linked to magazines.
In the channels T1=t, ... T14=t and Tt, or M1=6,....M14=6 and M6 can be programmed.
The PLC version used can limit the maximum number of tool holders.

18080	MM_TOOL_MANAGEMENT_MASK			N02, N09	FBW
-	Reserved memory for the tool management (SRAM)			DWORD	POWER ON
802d-cu3	-	0x0	0	0xFFFF	2/2
802d-ng2	-	0x0	0	0xFFFF	2/2
802d-ng3	-	0x0	0	0xFFFF	2/2
802d-tm1	-	0x0	0	0xFFFF	0/0
802d-tm2	-	0x0	0	0xFFFF	2/2
802d-tm3	-	0x0	0	0xFFFF	2/2

Description:

Value = 0: no memory reserved, no tool monitoring possible
Value = 0x2: monitoring data / memory available
(only possible if option "Tool monitoring" is available)
Related to: MD20310 $MC_TOOL_MANAGEMENT_MASK

18082	MM_NUM_TOOL			N02, N09	FBW,S7
-	Number of tools the NCK can manage (SRAM)			DWORD	PowerOn
-					
802d-cu3	-	128	0	200	0/0
802d-ng2	-	64	0	200	0/0
802d-ng3	-	128	0	200	0/0
802d-tm1	-	32	0	64	0/0
802d-tm2	-	64	0	200	0/0
802d-tm3	-	128	0	200	0/0

Description:

The NC cannot manage more tools than the number entered in the MD. A tool has at least one cutting edge.
Buffered user memory is used.
The maximum possible number of tools is equal to the number of cutting edges.
The MD must also be set when TOOLMAN is not used.
The buffered data are lost when the machine data is changed.
Related to:
MD18100 $MN_MM_NUM_CUTTING_EDGES_IN_TOA

18088	MM_NUM_TOOL_CARRIER			N02, N09	W1
-	Maximum number of definable tool holders			DWORD	PowerOn
-					
-	-	0	0	600	0/0

Description:

Maximum number of definable toolholders for orientable tools in the TO area. The value is divided by the number of active TO units. The integer result states how many toolholders can be defined for each TO unit. The data for defining a toolholder are set with the system variables $TC_CARR1, ... $TC_CARR14.
The data are stored in battery-backed memory.
Application example(s):
-

18094	MM_NUM_CC_TDA_PARAM			N02, N09	H2
-	Number of OEM tool data (SRAM)			DWORD	PowerOn
-					
802d-cu3	-	10	0	10	1/1
802d-ng2	-	10	0	10	1/1
802d-ng3	-	10	0	10	1/1
802d-tm1	-	0	0	10	0/0
802d-tm2	-	0	0	10	0/0
802d-tm3	-	0	0	10	0/0

Description: Number of tool-specific data (of type Integer) which can be created per tool, and which are available to the user or the compile cycle.
This machine data increases the buffered memory requirement by sizeof(double)*max. number of tools.
Related to:
MD18080 $MN_MM_TOOL_MANAGEMENT_MASK
MD18082 $MN_MM_NUM_TOOL

18095	MM_TYPE_CC_TDA_PARAM			N02, N09	-
-	Type of OEM tool data (SRAM)			DWORD	PowerOn
-					
802d-cu3	10	4,4,4,4,4,4,4,4,4,4	1	6	1/1
802d-ng2	10	4,4,4,4,4,4,4,4,4,4	1	6	1/1
802d-ng3	10	4,4,4,4,4,4,4,4,4,4	1	6	1/1
802d-tm1	10	4,4,4,4,4,4,4,4,4,4	1	6	-1/2
802d-tm2	10	4,4,4,4,4,4,4,4,4,4	1	6	-1/2
802d-tm3	10	4,4,4,4,4,4,4,4,4,4	1	6	-1/2

Description: Work may only be done with the default setting.
Individual types can be assigned to the parameters in this way. The array index n can accept values from 0 to the value of MD18094 $MN_MM_NUM_CC_TDA_PARAM.
The possible values of the MD = 1, 2, 3, 4, 5 and 6 represent the NC language types
1 BOOL,
2 CHAR,
3 INT,
4 REAL,
5 STRING and
6 AXIS.
The type FRAME cannot be defined here. The type STRING can be up to 31 characters long.
Example:
MD18094 $MN_MM_NUM_CC_TDA_PARAM=1
MD18095 $MN_MM_TYPE_CC_TDA_PARAM=5
"UserCuttingEdge" can then be programmed for parameter $TC_TPC1.
Buffered working memory is used. A value change can - but need not - lead to reconfiguration of the buffered memory.
Related to:
MD18094 $MN_MM_NUM_CC_TDA_PARAM
MD18082 $MN_MM_NUM_TOOL

18096	MM_NUM_CC_TOA_PARAM			N02, N09	G2
-	Number of data per tool edge for compile cycles (SRAM)			DWORD	PowerOn
-					
802d-cu3	-	10	0	10	1/1
802d-ng2	-	10	0	10	1/1
802d-ng3	-	10	0	10	1/1
802d-tm1	-	0	0	10	0/0
802d-tm2	-	0	0	10	0/0
802d-tm3	-	0	0	10	0/0

Description: Number of TOA data (of type Real) which can be created per tool, and which are available to the user or the compile cycle.
This MD increases the buffered memory requirement by sizeof(double)*max. number of cutting edges.
Related to:
MD18080 $MN_MM_TOOL_MANAGEMENT_MASK
MD18100 $MN_MM_NUM_CUTTING_EDGES_IN_TOA

18097	MM_TYPE_CC_TOA_PARAM			N02, N09	-
-	Type of OEM data per cutting edge (SRAM)			DWORD	PowerOn
-					
802d-cu3	10	4,4,4,4,4,4,4,4,4,4	1	6	1/1
802d-ng2	10	4,4,4,4,4,4,4,4,4,4	1	6	1/1
802d-ng3	10	4,4,4,4,4,4,4,4,4,4	1	6	1/1
802d-tm1	10	4,4,4,4,4,4,4,4,4,4	1	6	-1/2
802d-tm2	10	4,4,4,4,4,4,4,4,4,4	1	6	-1/2
802d-tm3	10	4,4,4,4,4,4,4,4,4,4	1	6	-1/2

Description: Work may only be done with the default setting.
Individual types can be assigned to the parameters in this way. The array index n can accept values from 0 to the value of MD18096 $MN_MM_NUM_CC_TOA_PARAM.
The possible values of the MD = 1, 2, 3, 4 and 6 represent the NC language types
1 BOOL,
2 CHAR,
3 INT,
4 REAL and
6 AXIS.
The type STRING is explicitly not possible here. The value 5 is treated like value 2).
The type FRAME cannot be defined here.
Example:
MD18096 $MN_MM_NUM_CC_TOA_PARAM=1
MD18097 $MN_MM_TYPE_CC_TOA_PARAM=2
"A" can then be programmed for parameter $TC_DPC1.
Buffered working memory is used. A value change can - but need not - lead to reconfiguration of the buffered memory.
Related to:
MD18096 $MN_MM_NUM_CC_TOA_PARAM
MD18100 $MN_MM_NUM_CUTTING_EDGES_IN_TOA

18098	MM_NUM_CC_MON_PARAM			N02, N09	FBW
-	Number of monitoring data per tool for compile cycles			DWORD	PowerOn
-					
-	-	0	0	10	0/0

Description: Number of monitoring data (of type Integer) which can be created per tool, and which are available to the user or the compile cycle.
This MD increases the buffered memory requirement by sizeof(int)*max. number of cutting edges.
Related to:
MD18080 $MN_MM_TOOL_MANAGEMENT_MASK
MD18100 $MN_MM_NUM_CUTTING_EDGES_IN_TOA

18099	MM_TYPE_CC_MON_PARAM			N02, N09	FBW
-	Type of OEM monitor data (SRAM)			DWORD	PowerOn
-					
-	10	3,3,3,3,3,3,3,3,3,3	1	6	-1/2

Description: Work may only be done with the default setting.
Individual types can be assigned to the parameters in this way. The array index n can accept values from 0 to the value of MD18098 $MN_MM_NUM_CC_MON_PARAM.
Possible values of the MD = 1, 2, 3, 4 and 6 represent the NC language types
1 BOOL,
2 CHAR,
3 INT,
4 REAL and
6 AXIS.
The FRAME type cannot be defined here.
(The type STRING is explicitly not possible here. The value 5 is treated like value 2.)
Example:
MD18098 $MN_MM_NUM_CC_MON_PARAM=1
MD18099 $MN_MM_TYPE_CC_MON_PARAM=2
"UserCuttingEdge" can then be programmed for the parameter $TC_MOPC1.
Buffered working memory is used. A value change can - but need not - lead to reconfiguration of the buffered memory.
Related to:
MD18100 $MN_MM_NUM_CUTTING_EDGES_IN_TOA
MD18098 $MN_MM_NUM_CC_MON_PARAM

18100	MM_NUM_CUTTING_EDGES_IN_TOA			N02, N09	W1
-	Tool offsets in the TO range (SRAM)			DWORD	PowerOn
-					
802d-cu3	-	144	0	288	0/0
802d-ng2	-	144	0	288	0/0
802d-ng3	-	144	0	288	0/0
802d-tm1	-	32	0	64	0/0
802d-tm2	-	64	0	128	0/0
802d-tm3	-	128	0	200	0/0

Description:

Defines the number of tool cutting edges in a TO area. This machine data reserves approximately 250 bytes of battery-backed memory per TOA block for each tool cutting edge, irrespective of the tool type.
Tools with cutting edges of type 400-499 (= grinding tools) also occupy the location of a cutting edge.
Example:
Defining 10 grinding tools each of which has one cutting edge. Then at least:
MD18082 $MN_MM_NUM_TOOL = 10
MD18100 $MN_MM_NUM_CUTTING_EDGES_IN_TOA = 20 must apply.
See also MD18082 $MN_MM_NUM_TOOL
Buffered user memory is used.
Special cases:
The battery-backed data are lost if this machine data is altered.

18102	MM_TYPE_OF_CUTTING_EDGE			N02, N09	W1
-	Type of D No. programming (SRAM)			DWORD	PowerOn
-					
-	-	0	0	1	2/2

Description:

This MD activates the 'flat D number management'.
The type of D programming can be determined by individual values:

- direct or
- indirect programming.

The default value is zero. This means that the NCK manages the T and D numbers.
The NCK only accepts a value > 0 if bit 0 is not set in MD18080 $MN_MM_TOOL_MANAGEMENT_MASK. That means the tool managment function cannot be active at the same time.

```
Value:   Meaning
--------------------------------------------------------------------------------
0:   No 'flat D number management' active
1:   D numbers are programmed directly and absolutely
     Values 2, 3 have not yet been released
```

18105	MM_MAX_CUTTING_EDGE_NO			N02, N09	W1
-	maximum value of D number			DWORD	PowerOn
-					
-	-	9	1	32000	0/0

Description: Maximum value of the D number.
This does not affect the maximum number of D numbers per cutting edge.
The monitoring of the D number assignment associated with this value is only active when the D numbers are redefined. This means that existing data blocks are not subsequently checked if the MD is changed.
The following settings are advantageus:
MD18105 $MN_MM_MAX_CUTTING_EDGE_NO is equal to
MD18106 $MN_MM_MAX_CUTTING_EDGE_PER_TOOL.
If MD18105 $MN_MM_MAX_CUTTING_EDGE_NO is selected > MD18106 $MN_MM_MAX_CUTTING_EDGE_PER_TOOL, then the difference between offset number D and cutting-edge number CE should be known.
See also language commands CHKDNO, CHKDM, GETDNO, SETDNO, DZERO.
The machine data is not evaluated with the function "flat D number", and therefore has no significance there.
The MD can affect the memory requirement:
If the relation between the two, above-mentioned MDs changes from "less than or equal to" to "greater than" or vice versa, then this affects the non-buffered memory requirement.
Related to:
MD18106 $MN_MM_MAX_CUTTING_EDGE_PER_TOOL

18106	MM_MAX_CUTTING_EDGE_PERTOOL			N02, N09	W1
-	maximum number of D numbers per tool			DWORD	PowerOn
-					
-	-	9	1	12	0/0

Description: Maximum number of cutting edges (D offsets) per tool (per T number).
This enables more safety to be achieved in the data definition. The value can be set to 1 if only tools with one cutting edge are used. This prevents more than one cutting edge being assigned to a tool in the data definition.
The following settings are advantageus: MD18105 $MN_MM_MAX_CUTTING_EDGE_NO is equal to MD18106 $MN_MM_MAX_CUTTING_EDGE_PER_TOOL. If MD18105 $MN_MM_MAX_CUTTING_EDGE_NO is selected > MD18106 $MN_MM_MAX_CUTTING_EDGE_PER_TOOL, then the difference between offset number D and cutting-edge number CE should be known.
See also language commands CHKDNO, CHKDM, GETDNO, SETDNO, DZERO.
The machine data is not evaluated with the function "flat D number", and therefore has no significance there.
The data can affect the memory requirement.
The MD can affect the memory requirement.
If the relation between the two, above-mentioned MDs changes from "less than or equal to" to "greater than" or vice versa, then this affects the non-buffered memory requirement.
Related to:
MD19105 $MN_MM_MAX_CUTTING_EDGE_NO

18108	MM_NUM_SUMCORR			N02, N09	W1
-	Resulting offsets in TO area (SRAM)			DWORD	PowerOn
-					
-	-	-1	-1	9000	0/0

Description: Total number of resulting offsets in the NCK.
The value = -1 means that the number of resulting offsets is equal to the number of cutting edges multiplied by the number of resulting offsets per cutting edge.
A value > 0 and < "number of cutting edges multiplied by the number of resulting offsets per cutting edge" means that a maximum "number of resulting offsets per cutting edge" can be defined per cutting edge but do not have to be. This means that buffered memory can be used economically. Only those cutting edges for which expliicit data have been defined have a resulting offset data block.
Buffered memory is reserved. The memory requirement for a resulting offset doubles if "setup offset active" has also been configured, see MD18112 $MN_MM_KIND_OF_SUMCORR.
See also:
MD18100 $MN_MM_NUM_CUTTING_EDGES_IN_TOA,
MD18110 $MN_MM_MAX_SUMCORR_PER_CUTTEDGE

18110	MM_MAX_SUMCORR_PER_CUTTEDGE			N02, N09	S7
-	Max. number of additive offsets per edge (SRAM)			DWORD	PowerOn
-					
-	-	1	1	6	0/0

Description: Maximum number of resulting offsets per cutting edge.
If MD18108 $MN_MM_NUM_SUMCORR > 0 then:
The data is not memory defining, but is only used for monitoring.
If MD18108 $MN_MM_NUM_SUMCORR = -1 then:
The data is memory defining.
See also
MD18108 $MN_MM_NUM_SUMCORR,
MD18100 $MN_MM_NUM_CUTTING_EDGES_IN_TOA.

18112	MM_KIND_OF_SUMCORR			N02, N09	W1
-	Properties of resulting offsets in TO area (SRAM)			DWORD	PowerOn
-					
-	-	0	0	0x1F	0/0

Description: Properties of the resulting offsets in NCK.
Bit 0=0 "Resulting offsets fine" are backed up when the tool data are backed up.
Bit 0=1 "Resulting offsets fine" are backed up when the tool data are backed up.
Bit 1=0 Set-up offsets are backed up when the tool data are backed up.
Bit 1=1 Set-up offsets are not backed up when the tool data are backed up.
Bit 2=0 If work is done with the function tool management (TOOLMAN) and/or tool monitoring (TMMO), existing "resulting offsets fine/setup offsets" are not affected when the tool status is set to "active".
Bit 2 =1 Existing resulting offsets are set to zero when the tool status is set to "active".

Bit 3=0 If work is done with the function "TOOLMAN" +"adapter", the "resulting offsets fine"/setup offsets are transformed.
Bit 3=1 No transformation of the "resulting offsets fine"/setup offsets
Bit 4=0 No set-up offset data blocks
Bit 4=1 Set-up offset data blocks are additionally created. Whereby the resulting offset is composed of the sum of the set-up offset + "resulting offset fine"
Changing the status of bits 0, 1, 2, 3 does not change the memory structure.
Changing the status of bit 4 triggers restructuring of the buffered memory after the next PowerOn.
See also
MD18100 $MN_MM_NUM_CUTTING_EDGES_IN_TOA
MD18108 $MN_MM_NUM_SUMCORR
MD18110 $MN_MM_MAX_SUMCORR_PER_CUTTEDGE
MD18080 $MN_MM_TOOL_MANAGEMENT_MASK,
MD20310 $MC_TOOL_MANAGEMENT_MASK,
MD18086 $MN_MM_NUM_MAGAZINE_LOCATION,
MD18104 $MN_MM_NUM_TOOL_ADAPTER

18114	MM_ENABLE_TOOL_ORIENT			N02, N09	W1, F2
-	Assign tool cutting edge orientation			DWORD	PowerOn
-					
-	-	0	0	3	0/0

Description: The function allows an orientation deviating from the default value to be assigned to each tool cutting edge.
Value = 0:
The tool orientation function is inactive.
Value = 1:
The system parameter $TC_DPV[n, m] is assigned to each tool cutting edge D=m of the tool T=n, with the aid of which one of 6 possible tool orientations in positive or negative coordinate direction can be defined.
Value = 2:
Not only the system parameter $TC_DPV[n, m] but also the additional three system parameters $TC_DPV3[n, m], $TC_DPV4[n, m] and $TC_DPV5[n, m] are assigned to each tool cutting edge D=m of the tool T=n, with the aid of which any spatial tool orientation can be defined
T, D are the NC addresses T and D with which the tool change or the tool selection and the offset selection are programmed.
Value = 3:
Not only the system parameters $TC_DPV[n, m] and $TC_DPV3 - $TC_DPV5 but also the additional three system parameters $TC_DPVN3[n, m], $TC_DPVN4[n, m] and $TC_DPVN5[n, m] are assigned to each tool cutting edge D=m of the tool T=n, with the aid of which a vector (normal vector) can be defined that is preferably perpendicular to the tool orientation. The normal vector may be modified so that it lies in the plane formed by the orientation and the programmed normal vector but perpendicular to the orientation
The orientation and the possibly modified normal vector together define a complete orientation coordinate system. The machine data affects the requirement for battery-backed memory.

18116	MM_NUM_TOOL_ENV			N02, N09	W1
-	Number of tool environments in the TO area (SRAM)			DWORD	PowerOn
-					
-	-	0	0	600	0/0

Description: Total number of tool environments in the NCK.
Battery-backed memory is reserved.

18118	MM_NUM_GUD_MODULES			N02	S7
-	Number of GUD files in active file system (SRAM)			DWORD	PowerOn
-					
-	-	7	1	9	0/0

Description: A GUD block corresponds to a file in which user-defined data can be stored. 9 GUD blocks are available of which 3 are already assigned to specific users/ applications.
UGUD_DEF_USER (block for user)
SGUD_DEF_USER (block for SIEMENS)
MGUD_DEF_USER (block for machine manufacturer)
Special cases:

The number of GUD modules is determined by the GUD module with the highest number entered.

Example:

If the following GUD modules are defined,

UGUD
MGUD
GUD5
GUD8

then the machine data must be set to a value of 8, signifying a memory requirement of 8 x 120 bytes = 960 bytes.

It is therefore advisable to selected the "lowest" possible GUD module. If GUD modules UGUD and MGUD have not been assigned elsewhere, then they may be used for this purpose.
Related to:

MD18150 $MN_MM_GUD_VALUES_MEM
(Memory space for user variables)

18120	MM_NUM_GUD_NAMES_NCK			N02	S7
-	Number of global user variable names (SRAM)			DWORD	PowerOn
-					
-	-	50	0	32000	2/2

Description: Defines the number of user variables for NCK global user data (GUD). Approximately 80 bytes of memory per variable are reserved in the SRAM for the names of the variables. The additional memory required for the value of the variable depends on the data type of the variable. The number of available NCK global user data is exhausted on reaching the limit value set in MD18120 $MN_MM_NUM_GUD_NAMES_NCK or MD18150 $MN_MM_GUD_VALUES_MEM (memory space for user variables).
Buffered user memory is used.
Special cases:

The battery-backed data are lost if this machine data is altered.

Related to:
MD18150 $MN_MM_GUD_VALUES_MEM
(Memory space for user variables)

18130	MM_NUM_GUD_NAMES_CHAN			N02	S7
-	Number of channel-specific user variable names (SRAM)			DWORD	PowerOn
-					
-	-	150	0	32000	2/2

Description: Defines the number of user variable names for channel-specific global user data (GUD). Approximately 80 bytes of memory are reserved in the SRAM for each variable name. The additional memory required for the value of the variable is equal to the size of the data type of the variable multiplied by the number of channels. This means that each channel has its own memory available for the variable values. The number of available channel-specific global user data is exhausted on reaching the limit value set in MD18130 $MN_MM_NUM_GUD_NAMES_CHAN or MD18150 $MN_MM_GUD_VALUES_MEM (memory space for user variables).
The name created with the DEF statement is valid for all channels.
The memory requirement for the variable value is equal to the size of the data type multiplied by the number of channels.
Buffered user memory is used.
Special cases:
The battery-backed data are lost if this machine data is altered.
Related to:
MD18150 $MN_MM_GUD_VALUES_MEM
(Memory space for user variables)

18150	MM_GUD_VALUES_MEM			N02	A2
-	Memory location for global user variable values (SRAM)			DWORD	PowerOn
-					
802d-cu3	-	48	0	32000	2/2
802d-ng2	-	48	0	32000	2/2
802d-ng3	-	48	0	32000	2/2
802d-tm1	-	32	0	32000	2/2
802d-tm2	-	32	0	32000	2/2
802d-tm3	-	32	0	32000	2/2

Description: The specified value reserves memory space for the variable values of the global user data (GUD). The dimensioning of the memory depends to a large extent on the data types used for the variables.
Overview of the memory requirements of the data types:

Data type	Memory requirement
REAL	8 bytes
INT	4 bytes
BOOL	1 byte
CHAR	1 byte
STRING	1 byte per character, 100 characters permitted per string
AXIS	4 bytes
FRAME	up to 1KB depending on control model

The total memory required by a channel or axis-specific global user variable is the memory requirement of the variables multiplied by the number of channels or axes. The number of global user variables available is given when the limit defined in MD18120 $MN_MM_NUM_GUD_NAMES_NCK, MD18130 $MN_MM_NUM_GUD_NAMES_CHAN, MD18140 $MN_MM_NUM_GUD_NAMES_AXIS or MD18150 $MN_MM_GUD_VALUES_MEM is reached.
Buffered user memory is used.
Special cases:
The buffered data are lost if this machine data is altered!
Related to:
MD18118 $MN_MM_NUM_GUD_MODULES
(Number of GUD blocks)
MD18120 $MN_MM_NUM_GUD_NAMES_NCK
(Number of global user variables)
MD18130 $MN_MM_NUM_GUD_NAMES_CHAN
(Number of channel-specific user variables)

18160	MM_NUM_USER_MACROS			N02	S7
-	Number of macros (DRAM)			DWORD	PowerOn
-					
802d-cu3	-	70	0	32000	1/1
802d-ng2	-	70	0	32000	1/1
802d-ng3	-	70	0	32000	1/1
802d-tm1	-	50	0	32000	1/1
802d-tm2	-	50	0	32000	1/1
802d-tm3	-	50	0	32000	1/1

Description: Defines the number of macros that can be stored in the files _N_SMAC_DEF, _N_MMAC_DEF und _N_UMAC_DEF. Each of these files which is opened occupies at least one kbyte memory space for the file code in the part program memory. Another kbyte of memory is reserved for the file when the one kbyte file code limit is exceeded.
The dynamic user memory is used. For the stated number of macros, approximately 375 bytes are reserved per macro for management tasks.

18170	MM_NUM_MAX_FUNC_NAMES			N02	V2,A2
-	Number of miscellaneous functions (cycles, DRAM)			DWORD	PowerOn
-					
-	-	100	0	32000	0/0

Description: The data limits the maximum number of special functions over and above the predefined functions (such as sine, cosine, etc.) which can be used in
- cycle programs
- compile cycle software.

The function names are entered in the global NCK dictionary and must not conflict with the names that already exist.
The SIEMENS cycle package contains special functions that are taken into account by the default setting of the MD.
The data are stored in unbuffered memory. Approximately 150 bytes are required for each special function for management purposes.
Related to:
MD18180 $MN_MM_NUM_MAX_FUNC_PARAM
(Number. of additional parameters)

18180	MM_NUM_MAX_FUNC_PARAM			N02	V2
-	Number of additional parameters for cycles according to MD 18170			DWORD	PowerOn
-					
-	-	1000	0	32000	0/0

Description: Defines the maximum number of parameters required for the special functions in

- cycle programs
- compile cycle software.

50 parameters are required for the special functions of the SIEMENS cycle package, software version 1.
The data are stored in unbuffered memory. 72 bytes of memory are reserved for each parameter.
Related to:
MD18170 $MN_MM_NUM_MAX_FUNC_NAMES
(Number of special functions)

18190	MM_NUM_PROTECT_AREA_NCK			N12, N02, N06, N09	A3
-	Number of files for machine-related protection zones (SRAM)			DWORD	PowerOn
-					
802d-cu3	-	0	0	10	1/1
802d-ng2	-	0	0	10	1/1
802d-ng3	-	0	0	10	1/1
802d-tm1	-	0	0	10	-1/2
802d-tm2	-	0	0	10	-1/2
802d-tm3	-	0	0	10	-1/2

Description: This machine data defines how many blocks are created for the protection zones available in the NCK.
Buffered memory is used.
Special cases:
The battery-backed data are lost if this machine data is altered.
References:
/FB/, A3, "Axis Monitoring, Protection Zones"

18204	MM_NUM_CCS_TDA_PARAM			N02, N09	FBW
-	Number of Siemens OEM tool data (SRAM)			DWORD	PowerOn
-					
-	-	0	0	10	0/0

Description: Only when MD18080 $MN_MM_TOOL_MANAGEMENT_MASK, bit 2=1 ('H4'), is set:
User or OEM data of the tools.
Number of Siemens OEM TDA (=tool-specific) data (standard format Int).
See also: MD18094 $MN_MM_NUM_CC_TDA_PARAM, MD18082 $MN_MM_NUM_TOOL
Buffered user memory is used

18205	MM_TYPE_CCS_TDA_PARAM			N02, N09	FBW
-	Type of Siemens OEM tool data (SRAM)			DWORD	PowerOn
-					
-	10	4,4,4,4,4,4,4,4,4,4	1	6	0/0

Description:

Only when MD18080 $MN_MM_TOOL_MANAGEMENT_MASK, bit 2=1 ('H4'), is set:
User or OEM data in the tool management.
Type of tool-specific Siemens user data configured by MD18204 $MN_MM_NUM_CCS_TDA_PARAM.
Each parameter can be assigned its own type. The permissible types are

Type (See types of the NC language)	Value of the machine data
BOOL	1
CHAR	2
INT	3
REAL	4
STRING	5 (permits identifiers up to 31 characters long)
AXIS	6
FRAME	not defined

See also: MD18204 $MN_MM_NUM_CCS_TDA_PARAM, MD18082 $MN_MM_NUM_TOOL
Buffered user memory is used

18206	MM_NUM_CCS_TOA_PARAM			N02, N09	FBW
-	No. of Siemens OEM data per cutting edge (SRAM)			DWORD	PowerOn
-					
-	-	0	0	10	0/0

Description:

Only when MD18080 $MN_MM_TOOL_MANAGEMENT_MASK, bit 2=1 ('H4'), is set:
User or OEM data of the tools.
Number of Siemens OEM TOA data (standard format IN_Real).
See also: MD18096 $MN_MM_NUM_CC_TOA_PARAM, MD18100 $MN_MM_NUM_CUTTING_EDGES_IN_TOA
Buffered user memory is used

18207	MM_TYPE_CCS_TOA_PARAM			N02, N09	FBW
-	Type of Siemens OEM data per cutting edge (SRAM)			DWORD	PowerOn
-					
-	10	4,4,4,4,4,4,4,4,4,4	1	6	0/0

Description:

Only when MD18080 $MN_MM_TOOL_MANAGEMENT_MASK, bit 2=1 ('H4'), is set:
User or OEM data in the tool management.
Type of cutting-edge-specific Siemens user data configured by MD18206 $MN_MM_NUM_CCS_TOA_PARAM.

Each parameter can be assigned its own type. The permissible types are

Type	Value of the machine data
(See types of the NC language)	
BOOL	1
CHAR	2
INT	3
REAL	4
• (STRING is explicitly impossible here; value 5 is treated like value 2)	
AXIS	6
FRAME	not defined

See also: MD18206 $MN_MM_NUM_CCS_TOA_PARAM, MD18100 $MN_MM_NUM_CUTTING_EDGES_IN_TOA
Buffered user memory is used

18208	MM_NUM_CCS_MON_PARAM			N02, N09	FBW
-	No. of Siemens OEM monitor data (SRAM)			DWORD	PowerOn
-					
-	-	0	0	10	0/0

Description: Only when MD18080 $MN_MM_TOOL_MANAGEMENT_MASK, bit 0 = 1 or bit 1 = 1 and bit 2=1 ('H4'), is set:
User or OEM data in the tool management.
Number of Siemens OEM monitoring data; standard format IN_Int).
See also: MD18098 $MN_MM_NUM_CC_MON_PARAM, MD18100 $MN_MM_NUM_CUTTING_EDGES_IN_TOA
Buffered user memory is used

18209	MM_TYPE_CCS_MON_PARAM			N02, N09	FBW
-	Type of Siemens OEM monitor data (SRAM)			DWORD	PowerOn
-					
-	10	3,3,3,3,3,3,3,3,3,3	1	6	-1/2

Description: Only when MD18080 $MN_MM_TOOL_MANAGEMENT_MASK, bit 0 = 1 or bit 1 = 1 and bit 2=1 ('H4'), is set:
User or OEM data in the tool management.
Type of monitoring-specific Siemens user data configured by MD18208 $MN_MM_NUM_CCS_MON_PARAM.
Each parameter can be assigned its own type. The permissible types are

Type	Value of the machine data
(See types of the NC language)	
BOOL	1
CHAR	2
INT	3
REAL	4
(STRING is explicitly impossible here; value 5 is treated like value 2)	
AXIS	6
FRAME	not defined

See also: MD18208 $MN_MM_NUM_CCS_MON_PARAM, MD18100 $MN_MM_NUM_CUTTING_EDGES_IN_TOA
Buffered user memory is used

18210	MM_USER_MEM_DYNAMIC			EXP, N02	S7
-	User memory in DRAM [KB]			DWORD	PowerOn
-					
802d-cu3	-	3000	0	17920	0/0
802d-ng2	-	3000	0	15360	0/0
802d-ng3	-	3000	0	16384	0/0
802d-tm1	-	3000	0	13312	0/0
802d-tm2	-	3000	0	15360	0/0
802d-tm3	-	3000	0	16384	0/0

Description: The DRAM in the NC is used jointly by the system and the user.
MD18210 $MN_MM_USER_MEM_DYNAMIC defines the size of the DRAM available to the user. The input limits depend upon the hardware and software configurations of the CNC.
There are various types of user data in this memory area, for example.

- Local user data
- IPO block buffers
- User macros
- Diagnostics functions such as trace recording of times,.....
- Tool management trace
- Communication with 1-n HMIs; Value of n: See MD10134 $MN_MM_NUM_MMC_UNITS.
- Reorg Log file (required for internal purposes of the NC program sequence)
- ...

Each additionally active channel occupies a substantial amount of memory here.
Each activated axis requires part of this memory.
Exactly how much that is depends largely on the control model and the software version.
The settable values depend on the hardware and software configurations.
The value of NCK is automatically set after unbuffered startup of the NCK or deletion of the memory. The value is then such that the free memory defined in MD18050 $MN_INFO_FREE_MEM_DYNAMIC is available to the user.
(See the description of MD18050 $MN_INFO_FREE_MEM_DYNAMIC).
If the value is set too high (in the sense that the memory required is more than that available on the memory module), the NCK responds at the next NCK reset/power on by automatically reducing the machine data value to the maximum possible value that the hardware permits.
Message alarm 6030 advises of this process. This corresponds to a legal response of the NCK and is not an incorrect response.
The essential significance of the machine data is not to release the entire memory to the user because the memory is shared between the system and the user. A part of the physically existing memory is reserved for future developments of the NCK.
The maximum amount of memory available on the hardware can be found by selecting a value for the data that is so large that, after the subsequent restart, message alarm 6030 indicates the maximum available memory. Applications that use the maximum available memory will in all probability have memory problems with a software conversion to a newer NCK version.
Upper and lower limits are not necessary. The software rejects values outside the permissible range and then automatically sets suitable values.
(See also message alarm 6030.)
The data in the dynamic memory are not battery-backed.

Note:

During power on, the system software compares the sum of all requests for dynamic memory with the value in MD18210 $MN_MM_USER_MEM_DYNAMIC. Alarm 6000 "Memory allocated with standard machine data" is output if the memory required exceeds the memory capacity set with the MD. Alarm 6030 "User memory limit has been adapted" is output if the control detects during the power on that the memory capacity required by MD18210 $MN_MM_USER_MEM_DYNAMIC is larger than the physical memory.

Related to:

The available dynamic memory can be taken from MD18050 $MN_INFO_FREE_MEM_DYNAMIC (display data of the free dynamic memory).

18220	MM_USER_MEM_DPR			EXP, N02	-
-	User memory in DUAL PORT RAM (DPR)			DWORD	PowerOn
-					
-	-	0	-	-	-1/0

Description: The functionality is not available in previous software versions.

18230	MM_USER_MEM_BUFFERED			N02	S7
-	User memory in SRAM			DWORD	PowerOn
-					
802d-cu3	-	0	0	10240	0/0
802d-ng2	-	0	0	9216	0/0
802d-ng3	-	0	0	10240	0/0
802d-tm1	-	0	0	6144	0/0
802d-tm2	-	0	0	9216	0/0
802d-tm3	-	0	0	10240	0/0

Description: Battery-backed user memory (in kbyte).

Various types of user data are stored in this memory area.

For example:

- NC part programs
- R parameters
- Global user data (GUD)
- Definitions of the protection zones
- Correction tables EEC, CEC, QEC
- Tool / magazine data

...

This data is retained after control power off.

(Provided the data backup (battery,...) is in good working order and the Init switch is correctly set on the control).

This means that they are available unchanged after restart.

In the case of control models without a backup battery (e.g. 802S,...) there is, as a rule, an option of , specifically backing up the data by operation, so that they are available again after the next power on process.

The settable values depend on the hardware and software configurations.

The set values are designed for the minimum memory configuration of the particular control model.

256, 512 and 2000, 4000KB of battery-backed memory are available on the hardware.

Approximately 30KB of this physically present memory is used for internal purposes. This means that approximately 226, 482, 1970, 3970KB of user memory can be set.
After all the NCK functions have taken 'their' memory corresponding to the relevant machine data values, the rest of the memory is added to the part program memory. As a rule, the user will thus have more part program memory available than that guaranteed in the sales brochure. This 'more' may however vary from version to version.
If there are various memory configuration options for a control model then the data may have to be increased correspondingly when using the larger memory variants.
In this respect, see the meaning of MD18060 $MN_INFO_FREE_MEM_STATIC
Special cases:

The battery-backed data are lost if this machine data is altered.

18231	MM_USER_MEM_BUFFERED_TYPEOF			N02	-
-	Technology for data buffering			DWORD	PowerOn
-					
-	3	1,1,1	0	1	0/0

Description:

Type of technology used for data back-up
Value = 0 SRAM memory only
Value = 1 SRAM and flash/disk memory
If the value = 1 then see also MD18232 $MN_MM_ACTFILESYS_LOG_FILE_MEM
Index 0 = Reserved
Index 1 = Definition for the battery-backed data of the active file system (incl. machine data).
Index 2 = Definition for the battery-backed data of the passive file system (part programs, cycles, ...).
This value is in each case automatically derived during power on from MD11292 $MN_DRAM_FILESYST_CONFIG.

18232	MM_ACTFILESYS_LOG_FILE_MEM			N02	-
-	System: logfile size in SRAM [KB]			DWORD	PowerOn
-					
-	3	200,5,30	0	32000	0/0

Description:

Buffered log file for buffered data of the active file system (in kbytes)
Systems with slow data buffer media store changed buffered data in the internal system SRAM. When the buffer is full, all data of the active file system are made persistent. The buffer backs up the data persistence of the last persistence operation until the next power fail. After a power fail (power failure or power OFF), data that had not yet been made persistent at the time of the power fail can be restored from this buffer.
The log file serves to minimize or totally avoid data loss in the event of power fail.
1000 entries require approximately 70 kB.
A value greater than 0 is only practicable if MD18231 $MN_MM_USER_MEM_BUFFERED_TYPEOF[1] = 1.
A value equal to 0 means that the buffered data are not voltage loss safe if MD18231 $MN_MM_USER_MEM_BUFFERED_TYPEOF[1] = 1 (typical for SINUMERIK solution line)

Example:
With MD18232 $MN_MM_ACTFILESYS_LOG_FILE_MEM[2] = 0, data changes from synchronized actions can be excluded from the power fail data backup.
An improved time response of the synchronized actions would be advantageous. This should only be set if the buffered data that are changed by the synchronized action are not safety-relevant.
Index Meaning
0 Preprocessing buffer
1 Buffer for data changes within the range of the tool change
2 Buffer for data changes of the main processing (especially synchronized actions)
See also MD17610 $MN_DEPTH_OF_LOGFILE_OPT_PF, which can be used to optimize the behavior.

18233	IS_CONTINOUS_DATA_SAVE_ON			EXP, N02	-
-	System: Automatic saving of persistent data			BOOLEAN	PowerOn
-					
-	3	TRUE,TRUE,TRUE	-	-	0/0

Description: The machine data is relevant only if MD18231 $MN_MM_USER_MEM_BUFFERED_TYPEOF = 1.
The default value should be changed only if the system is operated in an environment,
Value = 0 : Continuous saving of persistent data on disk/flash/etc. is deactivated.
The dynamic response of the software on systems of the SolutionLine range can thus be improved.
Value = 1 : Continuous automatic saving of persistent data on disk/flash/etc. is active.
Index 0 = Reserved
Index 1 = Definition for the buffered data of the active file system (incl. machine data).
Index 2 = Definition for the buffered data of the passive file system (part programs, cycles, ...).
The default value should be changed only for diagnostic purposes or for optimizing the dynamic response.
The default value should be changed only if the system is operated in an environment,
where no spontaneous shutdown of the system / spontaneous power failure occurs.
Otherwise, persistent data can be lost.

18235	MM_INCOA_MEM_SIZE			EXP	-
-	Size of the DRAM memory for INCOA applications [Kbyte]			DWORD	PowerOn
-					
-	-	0	0	25600	-1/2

Description: On cold restart of the control system, the default value of MD18235 $MN_MM_INCOA_MEM_SIZE specifies
the DRAM memory range that is available for INCOA applications in total.
This MD can only be read. With the diagnostics function "Read current actual value" the
memory space actually occupied by the INCOA applications can be determined.

18237	MM_CYC_DATA_MEM_SIZE			EXP, N02	-
-	Cycle/display setting data in SRAM [kB]			DWORD	PowerOn
-					
-	-	0	0	96	1/RO

Description: Size of the buffered memory for 'Setting data for cycles and display' [kB]

18240	MM_LUD_HASH_TABLE_SIZE			EXP, N02	S7
-	Hash table size for LUD (DRAM)			DWORD	PowerOn
-					
-	-	37	11	107	0/0

Description: Defines the size of the hash table for local user data (LUD). The value entered must be a primary number. The setting allows the optimization of

- the interpreter execution time (low value = longer execution time) and
- memory requirements (low value = less memory).

A larger table requires a smaller number of decoding operations for internally decoding the variables and consequently a shorter interpreter execution time. The value of this machine data affects the amount of dynamic memory required for managing the blocks for local user variables with REORG, see MD28010 $MC_MM_NUM_REORG_LUD_MODULES (Number of blocks for local user variables with REORG (DRAM)).

Note:

This machine data is assigned internally by the control and must not be altered by the user.

18242	MM_MAX_SIZE_OF_LUD_VALUE			N02	V2
-	Maximum memory block size for LUD/GUD values			DWORD	PowerOn
-					
-	-	920	920	SLMAXVARBYTES	0/0

Description: Defines the net memory array size for LUD/GUD variables. Each NC program that defines at least one LUD/GUD variable or has call parameters then occupies at least one memory array of this size.

The LUD/GUD variables of a program may occupy the complete LUD/GUD value memory set for the channel. However, then there is no memory available for other programms.

The memory for the LUD/GUD variables (that is defined for LUD by the channel-specific MD28040 $MC_MM_LUD_VALUES_MEM and for GUD by the NCK-specific MD18150 $MN_MM_GUD_VALUES_MEM) is divided into equally sized arrays of the size MD18242 $MN_MM_MAX_SIZE_OF_LUD_VALUE.

Example:

```
MM_LUD_VALUES_MEM = 12 (kbytes gross)
MM_MAX_SIZE_OF_LUD_VALUE = 660 (bytes net)
                         + 16 (bytes management data per array)
                         ---------------------------------------
                          676 (bytes gross)
```

One then obtains 12*1024 / 676 = 18 memory arrays each of 660 bytes.

This means that 12 NC programs can either each occupy one array or one NC program can define, for example, 18 variables of type Frame (whose size is approximately 660 bytes.

Data type	Memory requirement
REAL	8 bytes
INT	4 bytes
BOOL	1 byte
CHAR	1 byte
STRING	1 byte per character, 100 characters are possible per string
AXIS	4 bytes
FRAME	up to 1 kbyte (depending on control model)

Related to:

MD28040 $MC_MM_LUD_VALUES_MEM

(Memory size for local user variables (DRAM))

Warning:

The battery-backed data are lost when this machine data is changed!

The size of the NC language type Frame depends on the maximum number of channel axes generated by the NCK.

There are NCK systems with a maximum number of channel axes from 4 to 20. In the case of 20 axes, the type Frame then has a size of 660 bytes.

18250	MM_CHAN_HASH_TABLE_SIZE			EXP, N02	S7
-	Hash table size for channel-specific data (DRAM)			DWORD	PowerOn
-					
-	-	23	3	193	0/0

Description: Defines the size of the hash table for channel-specific names. The value entered must be a primary number. The setting allows the optimization of

- the interpreter execution time (low value = longer execution time) and
- memory requirements (low value = less dynamic memory).

A larger table requires a smaller number of decoding operations for internally decoding the variables and consequently a shorter interpreter execution time. The value of this machine data affects the amount of dynamic memory required.

The memory required per channel in bytes is equal to the value entered multiplied by 68.

Note:

This machine data is assigned internally by the control and must not be altered by the user.

Warning:

The battery-backed data are lost if this machine data is altered!

18260	MM_NCK_HASH_TABLE_SIZE			EXP, N02	S7
-	Hash table size for global data (DRAM)			DWORD	PowerOn
-					
-	-	4001	537	4327	0/0

Description: Defines the size of the NCK-specific names. The value entered must be a primary number. The setting allows the optimization of

- the interpreter execution time (low value = longer execution time) and
- memory requirements (low value = less dynamic memory).

A larger table requires a smaller number of decoding operations for internally decoding the variables and consequently a shorter interpreter execution time. The value of this machine data affects the amount of dynamic memory required. The memory required in bytes is equal to the value entered multiplied by 68.

Note:
This machine data is assigned internally by the control and must not be altered by the user.

18270	MM_NUM_SUBDIR_PER_DIR			N02	S7
-	Number of subdirectories (DRAM)			DWORD	PowerOn
-					
-	-	MD_MAXNUM_DIR_IN_FILESYSTEM	-	-	0/RO

Description: Defines the maximum number of subdirectories that can be created in a directory or subdirectory of the passive file system.
This value is for information only, and cannot be changed.
See also MD18280 $MN_MM_NUM_FILES_PER_DIR (number of files per directory).

18280	MM_NUM_FILES_PER_DIR			N02	S7
-	Number of files per directory (DRAM)			DWORD	PowerOn
-					
-	-	MD_MAXNUM_FILES_PER_DIR	-	-	0/RO

Description: Defines the maximum number of files that can be created in a directory or subdirectory of the passive file system.
This value is for information only, and cannot be changed.
See also MMD18270 $MN_MM_NUM_SUBDIR_PER_DIR (number of subdirectories per directory).

18290	MM_FILE_HASH_TABLE_SIZE			EXP, N02	S7
-	Hash table size for files of a directory (SRAM)			DWORD	PowerOn
-					
-	-	47	3	299	0/0

Description: Defines the size for the files of a directory. The value entered must be a primary number. The setting allows the optimization of
- the interpreter execution time (low value = longer execution time) and
- memory requirements (low value = less memory).

The value of this machine data affects the amount of static memory required for the management of directories, see MD18310 $MN_MM_NUM_DIR_IN_FILESYSTEM (number of directories in the passive file system)
Buffered user memory is used.
Note:
This machine data is assigned internally by the control and must not be altered by the user.
Special cases:
The battery-backed data are lost if this machine data is altered!

18300	MM_DIR_HASH_TABLE_SIZE			EXP, N02	S7
-	Hash table size for subdirectories (SRAM)			DWORD	PowerOn
-					
-	-	11	3	349	0/0

Description: Defines the size of the subdirectories of a directory. The value entered must be a primary number. The setting allows the optimization of
- the interpreter execution time (low value = longer execution time) and
- memory requirement (low value = less memory).

The value of this machine data affects the amount of static memory required for the management of directories, see MD18310 $MN_MM_NUM_DIR_IN_FILESYSTEM (number of directories in the passive file system).

Buffered user memory is used.

Note:

This machine data is assigned internally by the control and must not be altered by the user.

Special cases:

The battery-backed data are lost if this machine data is altered!

18310	MM_NUM_DIR_IN_FILESYSTEM			N02	S7
-	Number of directories in passive file system (SRAM)			DWORD	PowerOn
-					
802d-cu3	-	30	30	256	0/0
802d-ng2	-	30	30	256	0/0
802d-ng3	-	30	30	256	0/0
802d-tm1	-	30	30	50	0/0
802d-tm2	-	30	30	256	0/0
802d-tm3	-	30	30	256	0/0

Description: This machine data limits the number of directories in the passive file system.

It can be used to reserve memory in the SRAM for the management of the directories. The directories and subdirectories of the passive file system set up by the system are included in this machine data. The memory required for the management of the directories can be calculated as follows:

Memory required = a (440+28 (b+c)) bytes

a = Input value of MD18310 $MN_MM_NUM_DIR_IN_FILESYSTEM
(no. of directories in passive file system)

b = Input value of MD19300 $MN_MM_DIR_HASH_TABLE_SIZE
(HASH table size for subdirectories)

c = Input value of MD18290 $MN_MM_FILE_HASH_TABLE_SIZE
(hash table size for the files of a directory)

Buffered user memory is used.

Special cases:

The battery-backed data are lost if this machine data is altered.

Related to:

MD18270 $MN_MM_NUM_SUBDIR_PER_DIR
(Number of subdirectories)

18320	MM_NUM_FILES_IN_FILESYSTEM			N02	S7
-	Number of files in passive file system (SRAM)			DWORD	PowerOn
-					
802d-cu3	-	512	64	768	0/0
802d-ng2	-	512	64	768	0/0
802d-ng3	-	512	64	768	0/0
802d-tm1	-	150	64	768	0/0
802d-tm2	-	512	64	768	0/0
802d-tm3	-	512	64	768	0/0

Description: Defines the number of files available in the part program memory. This machine data is used to reserve memory in SRAM - approximately 320 bytes per file - for managing the file memory. Each file created requires a minimum of one kbyte of memory for the file code. If the one kbyte limit for the file code is exceeded another kbyte is reserved for the file.
Buffered user memory is used.
Special cases:
The battery-backed data are lost if this machine data is altered.
Related to:
MD18280 $MN_MM_NUM_FILES_PER_DIR
(Number of files in directories)

18321	MM_NUM_SYSTEM_FILES_IN_FS			N02	-
-	Number of system files			DWORD	PowerOn
-					
802d-cu3	-	300	100	512	1/1
802d-ng2	-	300	100	512	1/1
802d-ng3	-	300	100	512	1/1
802d-tm1	-	100	100	512	1/1
802d-tm2	-	300	100	512	1/1
802d-tm3	-	300	100	512	1/1

Description: Number of temporary system files in the passive file system (see also MD18355 $MN_MM_T_FILE_MEM_SIZE);
For example: Compilations of cycles (preprocessing), system traces

18331	MM_FLASHFILESYS_MEM			N01, N02	-
-	Reserved for FFS (DRAM)			BYTE	PowerOn
-					
-	8	0,0,0,0,0,0,0,0	-	-	0/0

Description: Reserved for FFS

18332	MM_FLASH_FILE_SYSTEM_SIZE			N01, N02	IAD
-	Size of FFS			DWORD	PowerOn
-					
-	-	0	0	4096	0/0

Description: Size of the flash file system on the PCNC (in kbyte)
Entries have to be made in steps of 128KB. Apart from 0, the smallest possible value is 512KB.

If the flash file system is used as a backup memory for the DRAM file system, then MD18332 $MN_MM_FLASH_FILE_SYSTEM_SIZE must be at least 3 times the size of the largest file in the DRAM file system larger than MD18351 $MN_MM_DRAM_FILE_MEM_SIZE.
Additional memory space is needed in the DRAM file system for log files if this has been configured by MD11295 $PROTOC_FILE_MEM.

18342	MM_CEC_MAX_POINTS			N01, N02	K3
-	max. number of interpolation points on sag compensation (SRAM)			DWORD	PowerOn
-					
802d-cu3	2	0,0,0,

18350	MM_USER_FILE_MEM_MINIMUM			EXP, N02	S7
-	minimum part program memory (SRAM)			DWORD	PowerOn
-					
-	-	0	0	0	0/0

Description: Valid only for PowerLine control models.
Minimum user memory for files in the passive file system (in kbyte)
There are various types of user data in this memory area.
Defines the minimum remaining battery-backed memory area for the files of the passive file system (in kbyte). The settable value depends on the hardware and software configurations (memory allocation SRAM) and on MD18230 $MN_MM_USER_MEM_BUFFERED (user memory in the SRAM). During the memory allocation of the SRAM, the files of the passive file system are assigned to the end of the remaining memory.
The remaining memory must have at least the memory space stated in MD18350 $MN_MM_USER_FILE_MEM_MINIMUM available for the file system to be able to work. If this is not ensured, the control assigns the pre-assigned data to the memory during power on, as a consequence of which all the battery-backed data entered by the user is lost. Alarm 6000 "Memory allocation with standard machine data" is also output.
The available part program memory can be taken from the MD18060 $MN_INFO_FREE_MEM_STATIC (display data of the free static memory).
Special cases:
The battery-backed data are lost if this machine data is changed and the remaining memory is less than the value of MD18350 $MN_MM_USER_FILE_MEM_MINIMUM.

18351	MM_DRAM_FILE_MEM_SIZE			EXP, N02	TE7,V2,M5,S7
-	Size of part program memory (DRAM)			DWORD	PowerOn
-					
-	-	0	0	32768	0/0

Description: Size of memory for files in the DRAM of the passive file system (in kbyte).
If the flash file system is used as a background memory for the DRAM file system then MD18332 $MN_MM_FLASH_FILE_SYSTEM_SIZE must be at least 3 times the size of the largest file in the DRAM file system and be larger than MD18351 $MN_MM_DRAM_FILE_MEM_SIZE.

18352	MM_U_FILE_MEM_SIZE			EXP, N02	S7
-	End user memory for part programs/cycles/files			DWORD	PowerOn
-					
802d-cu3	3	3136,0,0	0	3200	0/0
802d-ng2	3	1088,0,0	0	1152	0/0
802d-ng3	3	3136,0,0	0	3200	0/0
802d-tm1	3	576,0,0	0	640	0/0
802d-tm2	3	1088,0,0	0	1152	0/0
802d-tm3	3	3136,0,0	0	3200	0/0

Description: The machine data is not available or not defined for PowerLine control models.
End user memory for files in the passive file system (in kbyte).
There are various types of user data in this memory area.
E.g.: NC part programs, cycle programs of the end user, diagnostic files, ...
The settable values depend on the hardware and software configurations.
The settable size of the part program memory is, apart from the upper limit value,
determined by the MD18230 $MN_MM_USER_MEM_BUFFERED and can also
be determined by a software option.
Index 0 = Size of the battery-backed part program / cycle program memory
Index 1 = Reserved
Index 2 = Reserved

18353	MM_M_FILE_MEM_SIZE			EXP, N02	S7
-	Memory capacity for machine manufacturer's cycles/files			DWORD	PowerOn
-					
802d-cu3	3	0,0,0	0	512	0/0
802d-ng2	3	0,0,0	0	512	0/0
802d-ng3	3	0,0,0	0	512	0/0
802d-tm1	3	0,0,0	0	256	0/0
802d-tm2	3	0,0,0	0	512	0/0
802d-tm3	3	0,0,0	0	512	0/0

Description: The machine data is not available or not defined for PowerLine control models.
Memory for machine manufacturer files in the passive file system (in kbyte).
The machine manufacturer's files are in this memory area of the passive file system.
E.g.: cycle programs
The settable values depend on the hardware and software configurations.
The settable size of the memory is, apart from the upper limit value,
determined by the MD18230 $MN_MM_USER_MEM_BUFFERED.
Index 0 = Minimum size of the battery-backed (persistent) part program / cycle program memory
Index 1 = Reserved
Index 2 = Reserved

18354	MM_S_FILE_MEM_SIZE			EXP, N02	-
-	Memory capacity for NC manufacturer's cycles/files			DWORD	PowerOn
-					
-	3	384,0,128	0	768	0/0

Description: The machine data is not available or not defined for PowerLine control models.
Memory for the control manufacturer's files in the passive file system (in kbyte).
The control manufacturer's files are in this memory area of the passive file system.
E.g.: cycle programs, system files
The settable values depend on the hardware and software configurations.
The settable size of the memory is, apart from the upper limit value,
for index = 0 determined by MD18230 $MN_MM_USER_MEM_BUFFERED.
For index 1 = Reserved.
For index 2 = limited by the size of the internally availble battery-backed memory (SRAM).
Index 0 = Size of the battery-backed cycle program memory
Index 1 = Reserved
Index 2 = Size of the battery-backed memory for system files

18355	MM_T_FILE_MEM_SIZE			EXP, N02	-
-	Memory size for temporary files			DWORD	PowerOn
-					
-	-	1000	0	-	0/0

Description: The machine data is not available or not defined for PowerLine control models.
Memory for temporary files in the passive file system (in kbyte)
For example: Compilate of cycles (preprocessing), system traces

18356	MM_E_FILE_MEM_SIZE			EXP, N02	-
-	Memory size for the clipboard of external files			DWORD	PowerOn
-					
802d-cu3	3	512,0,0	0	3200	0/0
802d-ng2	3	512,0,0	0	1152	0/0
802d-ng3	3	512,0,0	0	3200	0/0
802d-tm1	3	256,0,0	0	640	0/0
802d-tm2	3	512,0,0	0	1152	0/0
802d-tm3	3	512,0,0	0	3200	0/0

Description: For PowerLine control models the machine data is not available or has not been defined.
Memory for the clipboard of external files in the passive file system (in kB)
The settable values depend on the hardware and software configuration.
The settable memory size is limited, except for the upper limit value,
for index = 0 by MD18230 $MN_MM_USER_MEM_BUFFERED.
for index = 1 reserved
for index = 2 reserved
Index 0 = size of the buffered clipboard
Index 1 = reserved
Index 2 = reserved

18390	MM_COM_COMPRESS_METHOD			EXP, N01, N02	-
-	Supported compression methods.			DWORD	PowerOn
-					
-	-	0x01	-	-	0/0

Description: Setting for the compression methods to be supported.

18400	MM_NUM_CURVE_TABS			N02, N09	M3
-	Number of curve tables (SRAM)			DWORD	PowerOn
-					
-	-	0	0	INT_MAX	-1/1

Description: Defines the maximum number of curve tables that can be stored in the SRAM of the entire system. A curve table consists of a number of curve segments.
Related to:
MD18402 $MN_MM_NUM_CURVE_SEGMENTS

18402	MM_NUM_CURVE_SEGMENTS			N02, N09	M3,B3
-	Number of curve segments (SRAM)			DWORD	PowerOn
-					
-	-	0	0	INT_MAX	-1/1

Description: Defines the maximum number of curve segments that can be stored in the SRAM of the entire system. The curve segments are a component of a curve table.
Related to
MD18400 $MN_MM_NUM_CURVE_TABS

18403	MM_NUM_CURVE_SEG_LIN			N02, N09	M3
-	Number of linear curve segments (SRAM)			DWORD	PowerOn
-					
-	-	0	0	INT_MAX	-1/1

Description: Number of linear curve segments in the SRAM available throughout the NCK.
A curve table may consist of "normal" curve segments and linear segments. The number of "normal" curve segments in the SRAM is defined by MD18402 $MN_MM_NUM_CURVE_SEGMENTS, these curve segments can accommodate polynomials.
Linear curve segments can only accommodate straight lines.
These linear curve segments are stored in battery-backed memory.

18404	MM_NUM_CURVE_POLYNOMS			N02, N09	M3,B3
-	Number of curve table polynomials (SRAM)			DWORD	PowerOn
-					
-	-	0	0	INT_MAX	-1/1

Description: Defines the maximum total number of polynomials for curve tables that can be stored in the SRAM of the entire system. The polynomials are a component of a curve segment. A maximum of 3 polynomials are required for a curve segment. As a rule, only 2 polynomials are used for each curve segment.
Related to
MD18400 $MN_MM_NUM_CURVE_TABS
MD18402 $MN_MM_NUM_CURVE_SEGMENTS

18406	MM_NUM_CURVE_TABS_DRAM			N02, N09	M3
-	Number of curve tables (DRAM)			DWORD	PowerOn
-					
-	-	0	0	INT_MAX	-1/1

Description: Number of curve tables in the DRAM available throughout the NCK.
The curve tables are stored either in the buffer memory or in the dynamic memory.
This MD is used to set the number of curve tables in the dynamic memory (DRAM).

18408	MM_NUM_CURVE_SEGMENTS_DRAM			N02, N09	M3
-	Number of curve segments (DRAM)			DWORD	PowerOn
-					
-	-	0	0	INT_MAX	-1/1

Description: Number of polynomial curve segments in the DRAM available throughout the NCK.
The curve segments are stored either in the buffer memory or in the dynamic memory.
This MD is used to set the number of segments in the dynamic memory (DRAM).

18409	MM_NUM_CURVE_SEG_LIN_DRAM			N02, N09	M3
-	Number of linear curve segments (DRAM)			DWORD	PowerOn
-					
-	-	0	0	INT_MAX	-1/1

Description: Number of linear curve segments in the DRAM available throughout the NCK.
A curve table may consist of "normal" curve segments and linear segments. The number of "normal" curve segments in the DRAM is defined by MD18408 $MN_MM_NUM_CURVE_SEGMENTS_DRAM, these curve segments can accommodate polynomials. Linear curve segments can only accommodate straight lines.
The curve segments are stored either in the buffer memory or in the dynamic memory. This MD defines the number of curve segments in the dynamic memory (DRAM).

18410	MM_NUM_CURVE_POLYNOMS_DRAM			N02, N09	M3
-	Number of curve table polynomials (DRAM)			DWORD	PowerOn
-					
-	-	0	0	INT_MAX	-1/1

Description: Number of polynomials for curve tables in the DRAM available throughout the NCK.
The polynomials for curve tables are stored in the buffer memory or in the dynamic memory.
This MD is used to set the number of polynomials for curve tables in the dynamic memory (DRAM).

18450	MM_NUM_CP_MODULES			N02, N09	-
-	Max. number of CP modules			DWORD	PowerOn
-					
-	-	4	0	48	-1/1

Description: Number of CP coupling modules available within the NCK
The MD defines the max. permissible number of CP couplings and reserves the required dynamic memory (DRAM).

18452	MM_NUM_CP_MODUL_LEAD			N02, N09	-
-	Maximum number of CP master values			DWORD	PowerOn
-					
-	-	4	0	99	-1/1

Description: Number of NCK-wide available CP master values.
This MD defines the max. permissible number of CP master values and reserves the required dynamic memory (DRAM).

18500	MM_EXTCOM_TASK_STACK_SIZE			EXP, N02	S7
-	Stack size for external communications task (DRAM)			DWORD	PowerOn
-					
-	-	30	30	60	0/0

Description: Defines the size (KB) of the stack for external communication. The dynamic memory area is used.
Note:
This machine data is assigned internally by the control and must not be altered by the user.

18510	MM_SERVO_TASK_STACK_SIZE			EXP, N02	S7
-	Stack size of servo task (DRAM)			DWORD	PowerOn
-					
-	-	20	20	40	0/0

Description: Defines the stack size for the SERVO task. The dynamic memory is used for this purpose.
Note:
This machine data is assigned internally by the control and must not be altered by the user.

18512	MM_IPO_TASK_STACK_SIZE			EXP, C02	-
-	Stack size of IPO task (DRAM)			DWORD	PowerOn
-					
-	-	30	30	40	0/0

Description: Size of the IPO task stack in kbyte.
The dynamic memory is used.

18540	MM_PLC_TASK_STACK_SIZE			EXP, N02	-
-	Stack size of the PLC task (DRAM)			DWORD	PowerOn
-					
-	-	30	30	60	0/0

Description: Size of the stack of the PLC task in kbyte.
Dynamic memory is used.

18541	MM_PLCBG_TASK_STACK_SIZE			EXP, N02	-
-	Stack size of the PLC background task (DRAM)			DWORD	PowerOn
-					
-	-	30	30	60	0/0

Description: Size of the stacks for the PLC background task in Kbyte.
The dynamic memory is used.

18542	MM_PLCINT_TASK_STACK_SIZE			EXP, N02	-
-	Stack size of the servosynch. PLC task (DRAM)			DWORD	PowerOn
-					
-	-	30	30	60	0/0

Description: Size of the stack of the servosynchronous PLC task in KB.
Dynamic memory is used.

18660	MM_NUM_SYNACT_GUD_REAL			N02	-
-	Number of configurable GUD variables of type REAL			DWORD	PowerOn
-					
-	9	0,0,0,0,0,0,0,0,0	0	32767	0/0

Description: The MD18660 $MN_MM_NUM_SYNACT_GUD_REAL[ ] can be used to extend individual GUD blocks by additional channel-specific parameter areas of type REAL. The GUD blocks are differentiated by the field index:
$MN_MM_NUM_SYNACT_GUD_REAL[0] = <value> -> extension of the SGUD block
$MN_MM_NUM_SYNACT_GUD_REAL[1] = <value> -> extension of the MGUD block
$MN_MM_NUM_SYNACT_GUD_REAL[2] = <value> -> extension of the UGUD block
$MN_MM_NUM_SYNACT_GUD_REAL[3] = <value> -> extension of the GUD4 block
$MN_MM_NUM_SYNACT_GUD_REAL[8] = <value> -> extension of the GUD9 block
In each case, fields with the following properties are created:
Data type REAL
Field size corresponding to <value> of the relevant machine data
Predefined names:
SYG_RS[ ] -> Synact parameter of type REAL in the SGUD block
SYG_RM[ ] -> Synact parameter of type REAL in the MGUD block
SYG_RU[ ] -> Synact parameter of type REAL in the UGUD block
SYG_R4[ ] -> Synact parameter of type REAL in the GUD4 block
....
SYG_R9[ ] -> Synact parameter of type REAL in the GUD9 block
The parameters can be read and written both by the part program and also via synchronous actions.

18661	MM_NUM_SYNACT_GUD_INT			N02	-
-	Number of configurable GUD variables of type integer			DWORD	PowerOn
-					
-	9	0,0,0,0,0,0,0,0,0	0	32767	0/0

Description: The MD18661 $MN_MM_NUM_SYNACT_GUD_INT[ ] can be used to extend individual GUD blocks by additional channel-specific parameter areas of type INTEGER. The GUD blocks are differentiated by the field index:
$MN_MM_NUM_SYNACT_GUD_INT[0] = <value> -> extension of the SGUD block
$MN_MM_NUM_SYNACT_GUD_INT[1] = <value> -> extension of the MGUD block
$MN_MM_NUM_SYNACT_GUD_INT[2] = <value> -> extension of the UGUD block
$MN_MM_NUM_SYNACT_GUD_INT[3] = <value> -> extension of the GUD4 block
$MN_MM_NUM_SYNACT_GUD_INT[8] = <value> -> extension of the GUD9 block
In each case, fields with the following properties are created:
Data type BOOL

Field size corresponding to <value> of the relevant machine data
Predefined names:
SYG_IS[ ] -> Synact parameter of type INT in the SGUD block
SYG_IM[ ] -> Synact parameter of type INT in the MGUD block
SYG_IU[ ] -> Synact parameter of type INT in the UGUD block
SYG_I4[ ] -> Synact parameter of type INT in the GUD4 block
....
SYG_I9[ ] -> Synact parameter of type INT in the GUD9 block
The parameters can be read and written both by the part program and also via synchronous actions.

18662	MM_NUM_SYNACT_GUD_BOOL			N02	-
-	Number of configurable GUD variables of type Boolean			DWORD	PowerOn
-					
-	9	0,0,0,0,0,0,0,0,0	0	32767	0/0

Description:

The MD18662 $MN_MM_NUM_SYNACT_GUD_BOOL[ ] can be used to extend individual GUD blocks by additional channel-specific parameter areas of type Boolean. The GUD blocks are differentiated by the field index:
$MN_MM_NUM_SYNACT_GUD_BOOL[0] = <value> -> extension of the SGUD block
$MN_MM_NUM_SYNACT_GUD_BOOL[1] = <value> -> extension of the MGUD block
$MN_MM_NUM_SYNACT_GUD_BOOL[2] = <value> -> extension of the UGUD block
$MN_MM_NUM_SYNACT_GUD_BOOL[3] = <value> -> extension of the GUD4 block
$MN_MM_NUM_SYNACT_GUD_BOOL[8] = <value> -> extension of the GUD9 block
In each case, fields with the following properties are created:
Data type BOOL
Field size corresponding to <value> of the relevant machine data
Predefined names:
SYG_BS[ ] -> Synact parameter of type Boolean in the SGUD block
SYG_BM[ ] -> Synact parameter of type Boolean in the MGUD block
SYG_BU[ ] -> Synact parameter of type Boolean in the UGUD block
SYG_B4[ ] -> Synact parameter of type Boolean in the GUD4 block
....
SYG_B9[ ] -> Synact parameter of type Boolean in the GUD9 block
The parameters can be read and written both by the part program and also via synchronous actions.

18663	MM_NUM_SYNACT_GUD_AXIS			N02	-
-	Number of configurable GUD variables of type Axis			DWORD	PowerOn
-					
-	9	0,0,0,0,0,0,0,0,0	0	32767	0/0

Description:

The MD18663 $MN_MM_NUM_SYNACT_GUD_AXIS[ ] can be used to extend individual GUD blocks by additional channel-specific parameter areas of type AXIS. The GUD blocks are differentiated by the field index:
$MN_MM_NUM_SYNACT_GUD_AXIS[0] = <value> -> extension of the SGUD block
$MN_MM_NUM_SYNACT_GUD_AXIS[1] = <value> -> extension of the MGUD block
$MN_MM_NUM_SYNACT_GUD_AXIS[2] = <value> -> extension of the UGUD block
$MN_MM_NUM_SYNACT_GUD_AXIS[3] = <value> -> extension of the GUD4 block
$MN_MM_NUM_SYNACT_GUD_AXIS[8] = <value> -> extension of the GUD9 block
In each case, fields with the following properties are created:
Data type AXIS

Field size corresponding to <value> of the relevant machine data
Predefined names:
SYG_AS[ ] -> Synact parameter of type AXIS in the SGUD block
SYG_AM[ ] -> Synact parameter of type AXIS in the MGUD block
SYG_AU[ ] -> Synact parameter of type AXIS in the UGUD block
SYG_A4[ ] -> Synact parameter of type AXIS in the GUD4 block
....
SYG_A9[ ] -> Synact parameter of type AXIS in the GUD9 block
The parameters can be read and written both by the part program and also via synchronous actions.

18664	MM_NUM_SYNACT_GUD_CHAR			N02	-
-	Configurable GUD variable of type Char			DWORD	PowerOn
-					
-	9	0,0,0,0,0,0,0,0,0	0	32767	0/0

Description:

The MD18664 $MN_MM_NUM_SYNACT_GUD_CHAR[ ]
can be used to extend individual GUD blocks by additional channel-specific parameter areas of type CHAR.
The GUD blocks are differentiated by the field index:
$MN_MM_NUM_SYNACT_GUD_CHAR[0] = <value> -> extension of the SGUD block
$MN_MM_NUM_SYNACT_GUD_CHAR[1] = <value> -> extension of the MGUD block
$MN_MM_NUM_SYNACT_GUD_CHAR[2] = <value> -> extension of the UGUD block
$MN_MM_NUM_SYNACT_GUD_CHAR[3] = <value> -> extension of the GUD4 block
$MN_MM_NUM_SYNACT_GUD_CHAR[8] = <value> -> extension of the GUD9 block
In each case, fields with the following properties are created:
Data type CHAR
Field size corresponding to <value> of the relevant machine data
Predefined names:
SYG_CS[ ] -> Synact parameter of type CHAR in the SGUD block
SYG_CM[ ] -> Synact parameter of type CHAR in the MGUD block
SYG_CU[ ] -> Synact parameter of type CHAR in the UGUD block
SYG_C4[ ] -> Synact parameter of type CHAR in the GUD4 block
....
SYG_C9[ ] -> Synact parameter of type CHAR in the GUD9 block
The parameters can be read and written both by the part program and also via synchronous actions.

18665	MM_NUM_SYNACT_GUD_STRING			N02	-
-	Configurable GUD variable of type STRING			DWORD	PowerOn
-					
-	9	0,0,0,0,0,0,0,0,0	0	25	0/0

Description:

The MD18665 $MN_MM_NUM_SYNACT_GUD_STRING[ ] can be used to extend individual GUD blocks by additional channel-specific parameter areas of type STRING.
The GUD blocks are differentiated by the field index:
$MN_MM_NUM_SYNACT_GUD_STRING[0] = <value> -> extension of the SGUD block
$MN_MM_NUM_SYNACT_GUD_STRING[1] = <value> -> extension of the MGUD block
$MN_MM_NUM_SYNACT_GUD_STRING[2] = <value> -> extension of the UGUD block
$MN_MM_NUM_SYNACT_GUD_STRING[3] = <value> -> extension of the GUD4 block
$MN_MM_NUM_SYNACT_GUD_STRING[8] = <value> -> extension of the GUD9 block

In each case, fields with the following properties are created:
Data type STRING
Field size corresponding to <value> of the relevant machine data
The maximum length of a string is 31 characters.
Predefined names:
SYG_SS[ ] -> Synact parameter of type STRING in the SGUD block
SYG_SM[ ] -> Synact parameter of type STRING in the MGUD block
SYG_SU[ ] -> Synact parameter of type STRING in the UGUD block
SYG_S4[ ] -> Synact parameter of type STRING in the GUD4 block
....
SYG_S9[ ] -> Synact parameter of type STRING in the GUD9 block
The parameters can be read and written both by the part program and also via synchronous actions.

18710	MM_NUM_AN_TIMER			N02	-
-	Number of global time variable for synchronized actions			DWORD	PowerOn
-					
802d-cu3	-	0	0	10000	2/2
802d-ng2	-	0	0	10000	0/0
802d-ng3	-	0	0	10000	0/0
802d-tm1	-	0	0	10000	0/0
802d-tm2	-	0	0	10000	0/0
802d-tm3	-	0	0	10000	0/0

Description: Number of global time variables for motion-synchronous actions (DRAM)

18720	MM_SERVO_FIFO_SIZE			EXP, N01	B3
-	Setpoint value for buffer size between IPO and position control			DWORD	PowerOn
-					
-	-	2	2	35	0/0

Description: The machine data determines the size of the setpoint value buffer between interpolator and position control, and has a direct effect on the dynamic user memory requirement.
That is normally 2. If several NCUs are connected via NCU link for e.g. rotary indexing machines, the value should be set to 3 on all NCUs. This will balance the transmission rates of the setpoint values via the link.
In a master value application (e.g. line shaft), the value should be set to 4, but only on the NCU that generates the master value. For all the other NCUs, the preset value should be maintained at 2.
Note:
In control loops that are connected via interpolator, every increase of the value generates a further dead-time.
When the IPO cycles of the NCUs within an NCU group are set to different values, the link communication will only run in the slowest IPO cycle. The MD must be increased in the ratio of the NCU IPO cycle to the slowest IPO cycle in the NCU group, in order to achieve a synchronized output of the setpoint values on the drive interface. The formula for this is as follows:
MM_SERVO_FIFO_SIZE = 2 * IPO cycle ratio + 1
Example:
In an IPO cycle ratio of 4:1, the value on the fast NCU should be set to 9 instead of 3. On the slow NCU, the value must be set to 3.

18730	MM_MAXNUM_ALARM_ACTIONS			N02	-
-	Length of the alarm action list			DWORD	PowerOn
-					
-	-	500	100	2000	1/1

Description: Maximum number of alarm actions that are retained. This is the length of the alarm action list.

18800	MM_EXTERN_LANGUAGE			N01, N12	K1
-	Activation of external NC languages			DWORD	PowerOn
-					
802d-cu3	-	0x0001	0x0000	0x0001	1/1
802d-ng2	-	0x0000	0x0000	0x0001	-1/2
802d-ng3	-	0x0000	0x0000	0x0001	-1/2
802d-tm1	-	0x0001	0x0000	0x0001	1/1
802d-tm2	-	0x0001	0x0000	0x0001	1/1
802d-tm3	-	0x0001	0x0000	0x0001	1/1

Description: The corresponding NC language must be activated to execute part programs of other control manufacturers. Only one external NC language can be selected. The range of instructions which is made available in each case is to be taken from the current documentation.
Bit 0 (LSB):
Execution of part programs ISO_2 or ISO_3.
See MD10880 $MN_MM_EXTERN_CNC_SYSTEM for coding.

18840	MM_EPSPARAM_DIMENSION			EXP, N01, N02	ePS Dokumentation
-	Dimension of ePS-specific variables $EPS_*			DWORD	PowerOn
-					
-	-	0	0	100	0/0

Description: Dimension of ePS-specific parameters $EPS_R[i], $EPS_I[i], $EPS_B[i], $EPS_A[i], $EPS_C[i], #EPS_S[i]; i = 0-Value of the machine data - 1. MD data value zero indicates that the functionality is not available.

18860	MM_MAINTENANCE_MON			EXP, N01	W6
-	Activation of maintenance data recording			BOOLEAN	PowerOn
-					
-	-	FALSE	-	-	1/1

Description: Maintenance data is recorded when this MD has the value TRUE.
The axial MD33060 $MA_MAINTENANCE_DATA sets which data are to be recorded.
Details are to be found in the service documentation.

18864	MM_NUM_TRAFO_DATA_SETS			N02, N09	W1
-	Maximum number of definable transformation data blocks.			DWORD	PowerOn
-					
-	-	0	0	100	0/0

Description: Maximum number of definable transformation data blocks. The data for defining a transformation data block are set by the system variables $NT_XXX.
The data are stored in the buffered memory.

18866	MM_NUM_KIN_TRAFOS			N02, N09	W1
-	Maximum number of transformation objects in NCK			DWORD	PowerOn
-					
-	-	0	0	200	0/0

Description: Maximum number of transformation objects in NCK.
This machine data defines the maximum number of transformation objects in NCK which can be created by transformations that are defined by kinematic chains.

18900	FPU_ERROR_MODE			EXP	-
-	System reaction to FPU calculation error			DWORD	PowerOn
NBUP, NDLD					
-	-	0x1	-	-	0/0

Description: System response to floating point unit arithmetic errors
Bit 0 = 0: (LSB)
The response to an FPU arithmetic error takes place during a station change by the station controller polling the FPU status word. (For CPUs without exception handling)
Bit 0 = 1:
There is an immediate branch into an exception when an FPU arithmetic error occurs:
The address at which the arithmetic error occurred can be exactly localized in the alarm output

18910	FPU_CTRLWORD_INIT			EXP	-
-	Basic initialization of FPU control word			DWORD	PowerOn
NBUP, NDLD					
-	-	0x37F	-	-	0/0

Description: The basic initialization of the FPU control word enables the FPU mode of operation (e.g. rounding mode) to be changed.
Significance of the bit: see manual of the FPU used.

18920	FPU_EXEPTION_MASK			EXP	-
-	Exception mask for FPU calculation errors			DWORD	PowerOn
NBUP, NDLD					
-	-	0xD	-	-	0/0

Description: The exception mask for FPU calculation errors enables selection of the FPU error for which an exception was issued.
Significance of the bits for Intel 486:
Bit 0 (LSB):
invalid operation
Bit 1:
denormalized operand: | operand | < as the smallest 2nd power
Bit 2:
zero divide
Bit 3:
overflow: result is larger than the largest displayable number
Bit 4:
underflow: result is smaller than the smallest displayable number

```
Bit 5:
   precision: result cannot be displayed exactly (e.g. 1/3)
Significance of the bits for Intel 960:
Bit 12:
   integer overflow
Bit 24:
   floating overflow
Bit 25:
   floating underflow
Bit 26:
   invalid operation
Bit 27:
   zero divide
Bit 28:
   floating inexact (precision): result cannot be displayed exactly
Bit 29:
   denormalized operand
```

18930	COREFILE_NAME			EXP	-
-	Path for core file creation			STRING	PowerOn
-					
-	-		-	-	0/0

Description: File name with path name under which a core file is created in the case of a control crash.
The core file is used for problem analysis by NCK development.
A core file will be created, if a valid file name is entered in this MD.

2.3 Channel-specific machine data

Number	Identifier			Display filters	Reference
Unit	Name			Data type	Active
Attributes					
System	Dimension	Default value	Minimum value	Maximum value	Protection

Description: Description

2.3.1 Basic channel machine data

20000	CHAN_NAME			C01, C10	B3,K1
-	Channel name			STRING	PowerOn
-					
-	-	CHAN1,CHAN2,CHAN3,CHAN4...	-	-	0/0

Description: The channel name can be defined in this MD. The channel name is only used for the display on the HMI.

20050	AXCONF_GEOAX_ASSIGN_TAB			C01, C10	TE7,TE8,M1,R2,K1,K2
-	Assignment of geometry axis to channel axis			BYTE	PowerOn
-					
802d-cu3	3	1, 2, 3,0, 0, 0,0, 0, 0,0, 0, 0...	0	20	2/2
802d-ng2	3	1, 0, 2	0	20	2/2
802d-ng3	3	1, 0, 2	0	20	2/2
802d-tm1	3	1, 2, 3,0, 0, 0,0, 0, 0,0, 0, 0...	0	20	2/2
802d-tm2	3	1, 2, 3,0, 0, 0,0, 0, 0,0, 0, 0...	0	20	2/2
802d-tm3	3	1, 2, 3,0, 0, 0,0, 0, 0,0, 0, 0...	0	20	2/2

Description: This MD assigns a geometry axis to a channel axis.
The assignment has to apply to all three geometry axes (X, Y, Z). If no assignment has been made for one geometry axis, then enter value 0. The geometry axis is thus not available and cannot be programmed. For example, in the case of the "Turning" technology the second geometry axis Y -> entry: value 0 (see default setting for turning) is missing.

20060	AXCONF_GEOAX_NAME_TAB			C01, C11, C10	F2,V2,M1,K2
-	Geometry axis name in channel			STRING	PowerOn
-					
802d-cu3	3	X, Y, Z,X, Y, Z...	-	-	1/1
802d-ng2	3	X, , Z	-	-	1/1
802d-ng3	3	X, , Z	-	-	1/1
802d-tm1	3	X, Y, Z,X, Y, Z...	-	-	1/1
802d-tm2	3	X, Y, Z,X, Y, Z...	-	-	1/1
802d-tm3	3	X, Y, Z,X, Y, Z...	-	-	1/1

Description: This MD is used to enter the names of the geometry axes separately for each channel. Geometry axes can be programmed in the part program using the names specified here.

Special cases:

- The geometry axis name entered must not conflict with the designations and assignments of the machine and channel axis names.
- The machine axis names entered must not be the same as the names entered for Euler angles (MD10620 $MN_EULER_ANGLE_NAME_TAB), names specified for directional vectors (MD10640 $MN_DIR_VECTOR_NAME_TAB), names given to intermediate point coordinates in the case of CIP (MD10660 $MN_INTERMEDIATE_POINT_NAME_TAB) or the names of interpolation parameters (MD10650 $MN_IPO_PARAM_NAME_TAB).
- The geometry axis name entered must not include any of the following reserved address letters:
  - D Tool offset (D function) - E Reserved
  - F Feedrate (F function) - G Preparatory function
  - H Auxiliary function (H function) - L Subroutine call
  - M Miscellaneous function (M function) - N Subblock
  - P Subroutine number of passes - R Arithmetic parameters
  - S Spindle speed (S function) - T Tool (T function)
- The name must not include any keywords (e.g. DEF, SPOS etc.) or pre-defined identifiers (e.g. ASPLINE, SOFT).
- The use of an axis identifier consisting of a valid address letter (A, B, C, I, J, K, Q, U, V, W, X, Y, Z) followed by an optional numerical extension (1-99) gives slightly better block cycle times than a general identifier.
- Identical names may be given to geometry axes assigned to different channels.

Related to:

MD10000 $MN_AXCONF_MACHAX_NAME_TAB
(machine axis name [axis no.])
MD20080 $MC_AXCONF_CHANAX_NAME_TAB
(channel axis name in the channel [channel axis no.])

20070	AXCONF_MACHAX_USED			C01, C10	TE3,B3,K5,M1,K1 ,K2,P3 pl,P3 sl,S1
-	Machine axis number valid in channel			BYTE	PowerOn
-					
802d-cu3	6	1, 2, 3, 4, 5, 0	0	31	2/2
802d-ng2	6	1, 2, 3, 4, 5, 0	0	31	2/2
802d-ng3	6	1, 2, 3, 4, 5, 0	0	31	2/2
802d-tm1	4	1, 2, 3, 4	0	31	2/2
802d-tm2	6	1, 2, 3, 4, 5, 0	0	31	2/2
802d-tm3	6	1, 2, 3, 4, 5, 0	0	31	2/2

Description: This MD assigns a channel axis to a machine axis.
The SINUMERIK 802D has five channel axes.
For the axes activated in the channel, the channel axis identifiers must be set by default in MD20080 $MC_AXCONF_CHANAX_NAME_TAB. These axes can be programmed.

A machine axis not assigned to a channel axis is not active, i.e. no axis control, no display on the screen.

20080	AXCONF_CHANAX_NAME_TAB			C01, C11, C10	F2,V2,M1,K2,V1
-	Channel axis name in channel			STRING	PowerOn
-					
802d-cu3	6	X, Y, Z, SP, A, PLCX	-	-	2/2
802d-ng2	6	X, Z, C, A, B, PLCX	-	-	2/2
802d-ng3	6	X, Z, C, A, B, PLCX	-	-	2/2
802d-tm1	4	X, Y, Z, SP	-	-	2/2
802d-tm2	6	X, Y, Z, SP, A, PLCX	-	-	2/2
802d-tm3	6	X, Y, Z, SP, A, PLCX	-	-	2/2

Description: This MD is used to set the name of the channel axis. The channel axis in the work (workpiece coordinate system) is displayed under this name. The same name is also written in the program.
Generally, the first two or three channel axes are used as geometry axes (see also MD20050 $MC_AXCONF_GEOAX_ASSIGN_TAB). The remaining channel axes are called additional axes.
The SINUMERIK 802D has five channel axes.

20082	AXCONF_CHANAX_DEFAULT_NAME			C01, C11, C10	-
-	Default axis name for axis variables in the channel			STRING	PowerOn
-					
-	-		-	-	0/0

Description: Variables or parameters of type Axis which have not been initialized are initialized with a default axis identifier. The identifier can be configured via the machine data MD20082 $MC_AXCONF_CHANAX_DEFAULT_NAME. If this machine data is set with an empty string, the 1st geometry axis is used, as previously.
MD20082 $MC_AXCONF_CHANAX_DEFAULT_NAME can be set by default with all available, valid axis identifiers. The value of this machine data should generally always correspond to a value of $MD20060 $MC_AXCONF_GEOAX_NAME_TAB, MD20080 $MC_AXCONF_CHANAX_NAME_TAB or MD10000 $MN_AXCONF_MACHAX_NAME_TAB.
If an invalid axis name is entered as a value or if this name has been changed, for example, in MD20080 $MC_AXCONF_CHANAX_NAME_TAB but not in MD20082 $MC_AXCONF_CHANAX_DEFAULT_NAME, then this is indicated with alarm 4041 channel %1 block %2 axis identifier %3 is invalid".
Only valid axis identifiers, empty string and "NO_AXIS" may be entered in MD20082 $MC_AXCONF_CHANAX_DEFAULT_NAME. "NO_AXIS" is used to indicate a non-initialized axis variable, empty string means previous behavior, i.e. each variable is initialized with the 1st geometry axis.

20090	SPIND_DEF_MASTER_SPIND			C01, C03	H2,K1,K2,P3 pl,P3 sl,S1,W1
-	Initial setting of master spindle in channel			BYTE	PowerOn
-					
802d-cu3	-	1,1,1,1,1,1,1,1,1,1,1,1,1,1,1,1	1	2	2/2
802d-ng2	-	1,1,1,1,1,1,1,1,1,1,1,1,1,1,1,1	1	2	1/1
802d-ng3	-	1,1,1,1,1,1,1,1,1,1,1,1,1,1,1,1	1	2	1/1
802d-tm1	-	1,1,1,1,1,1,1,1,1,1,1,1,1,1,1,1	1	1	1/1
802d-tm2	-	1,1,1,1,1,1,1,1,1,1,1,1,1,1,1,1	1	2	2/2
802d-tm3	-	1,1,1,1,1,1,1,1,1,1,1,1,1,1,1,1	1	2	2/2

Description: Definition of the default setting for the master spindle (in the channel).
The number of the spindle is entered.
A number of functions are linked to the master spindle, which are not possible with any other spindle.
Note:
The language command SETMS(n) can declare the spindle number as the master spindle.
The spindle defined in this MD is declared once again as the master spindle with SETMS.
The spindle defined in this MD is also declared as the master spindle at program end and program abort.

20094	SPIND_RIGID_TAPPING_M_NR			C01, C03, C10	H2,K1,S1
-	M function for switching into controlled axis mode			DWORD	PowerOn
-					
802d-cu3	-	70,70,70,70,70,70,70,70,70,70,70,70,70...	-	-	2/2
802d-ng2	-	70,70,70,70,70,70,70,70,70,70,70,70,70...	-	-	1/1
802d-ng3	-	70,70,70,70,70,70,70,70,70,70,70,70,70...	-	-	1/1
802d-tm1	-	70,70,70,70,70,70,70,70,70,70,70,70,70...	-	-	0/0
802d-tm2	-	70,70,70,70,70,70,70,70,70,70,70,70,70...	-	-	2/2
802d-tm3	-	70,70,70,70,70,70,70,70,70,70,70,70,70...	-	-	2/2

Description: This machine data defines the M auxiliary function number with which the spindle is switched into axis mode.
The M number defined in the machine data replaces M70 in Siemens language mode.
Note:
On the VDI interface, M70 is always output with the corresponding address extension to indicate the switch to axis mode.
Restrictions: Refer to machine data MD10715 $MN_M_NO_FCT_CYCLE
Related to:
MD10714 $MN_M_NO_FCT_EOP,
MD10715 $MN_M_NO_FCT_CYCLE,
MD20094 $MC_SPIND_RIGID_TAPPING_M_NR,
MD22254 $MC_AUXFU_ASSOC_M0_VALUE
For external language mode:
MD10814 $MN_EXTERN_M_NO_MAC_CYCLE,
MD10804 $MN_EXTERN_M_NO_SET_INT
MD10806 $MN_EXTERN_M_NO_DISABLE_INT,
MD10800 $MN_EXTERN_CHAN_SYNC_M_NO_MIN,
MD10802 $MN_EXTERN_CHAN_SYNC_M_NO_MAX
MD20095 $MC_EXTERN_RIGID_TAPPING_M_NR
For nibbling:
$MD26008 $MC_NIBBLE_PUNCH_CODE

20095	EXTERN_RIGID_TAPPING_M_NR			C01, C11, C03, C10	H2,K1
-	M function for switching to controlled axis mode(external mode)			DWORD	PowerOn
-					
802d-cu3	-	29,29,29,29,29,29,29, 29,29,29,29,29,29...	-	-	2/2
802d-ng2	-	29,29,29,29,29,29,29, 29,29,29,29,29,29...	-	-	-1/2
802d-ng3	-	29,29,29,29,29,29,29, 29,29,29,29,29,29...	-	-	-1/2
802d-tm1	-	29,29,29,29,29,29,29, 29,29,29,29,29,29...	-	-	0/0
802d-tm2	-	29,29,29,29,29,29,29, 29,29,29,29,29,29...	-	-	2/2
802d-tm3	-	29,29,29,29,29,29,29, 29,29,29,29,29,29...	-	-	2/2

Description: This machine data defines the M function number with which the switchover to controlled spindle/axis mode is to be carried out.
The M number defined in the machine data replaces M29 in external language mode.
Pre-defined M numbers, such as M00,M1,M2,M3, etc., are not allowed as M numbers.
Restrictions: See machine data MD10715 $MN_M_NO_FCT_CYCLE
Related to:
MD10714 $MN_M_NO_FCT_EOP,
MD10715 $MN_M_NO_FCT_CYCLE,
MD20094 $MC_SPIND_RIGID_TAPPING_M_NR,
MD22254 $MC_AUXFU_ASSOC_M0_VALUE
For external language mode:
MD10814 $MN_EXTERN_M_NO_MAC_CYCLE,
MD10804 $MN_EXTERN_M_NO_SET_INT
MD10806 $MN_EXTERN_M_NO_DISABLE_INT,
MD10800 $MN_EXTERN_CHAN_SYNC_M_NO_MIN,
MD10802 $MN_EXTERN_CHAN_SYNC_M_NO_MAX
MD20095 $MC_EXTERN_RIGID_TAPPING_M_NR
For nibbling:
MD26008 $MC_NIBBLE_PUNCH_CODE

20096	T_M_ADDRESS_EXT_IS_SPINO			C01, C04, C09	H2,W1
-	Meaning of address extension at T, M tool change			BOOLEAN	PowerOn
-					
-	-	FALSE,FALSE,FALSE,FALSE,FALSE,FALSE...	-	-	1/1

Description: This MD is only significant if the functions 'Tool management'/'flat D numbers' are inactive.
FALSE
The contents of the address extensions of the NC addresses T and M 'tool change command number' are not evaluated by the NCK. The PLC decides on the significance of the programmed extension.
TRUE
The address extensions of the NC addresses T and M 'tool change command number' - 'tool change command number'=TOOL_CHANGE_M_CODE with 6 as the default value - are interpreted as spindle numbers.
NCK treats the extension in the same way as the active functions 'tool management' and 'flat D number management'.
That is, the programmed D number always refers to the T number of the programmed main spindle number.
See also:
MD20090 $MC_SPIND_DEF_MASTER_SPIND,
MD22550 $MC_TOOL_CHANGE_MODE,
MD22560 $MC_TOOL_CHANGE_M_CODE

20100	DIAMETER_AX_DEF			C01, C10	P1
-	Geometry axis with transverse axis function			STRING	PowerOn
-					
802d-cu3	-		-	-	1/1
802d-ng2	-	X	-	-	1/1
802d-ng3	-	X	-	-	1/1
802d-tm1	-		-	-	1/1
802d-tm2	-		-	-	1/1
802d-tm3	-		-	-	1/1

Description: This MD is used to define a geometry axis as a transverse axis. Only one transverse axis can be defined here for each channel.
The axis identifier of an active geometry axis that has been defined in the channel-specific MD20050 $MC_AXCONF_GEOAX_ASSIGN_TAB[n] or MD24120 $MC_TRAFO_AX_GEOAX_ASSIGN_TAB_1[n] (from SW 4) and MD20060 $MC_AXCONF_GEOAX_NAME_TAB[n] must be specified.
If space characters are entered or if an axis identifier is specified for an axis which is not defined as a geometry axis, this leads to the following alarms:

- during runup, to alarm 4032 "Channel %1 wrong identifier for transverse axis in %2", if the "Diameter programming" function (DIAMON) or constant cutting velocity G96/G961/G962 is the switch-on setting.
- when the "Diameter programming (DIAMON)" function is activated, to alarm 16510 "Channel %1 block %2 No transverse axis available for diameter programming", if no axis has been permitted via DIAMCHANA[AX] for channel-specific diameter programming.

- when G96/G961/G962 has been programmed, to alarm 10870 "Channel %1 block %2 No transverse axis defined as reference axis for G96/G961/G962", if no geometry axis has been defined as the reference axis for G96/G961/G962 by the instruction SCC[ax].

Related to:

MD20050 $MC_AXCONF_GEOAX_ASSIGN_TAB[n]
(assignment of geometry axis to channel axis)
MD20060 $MC_AXCONF_GEOAX_NAME_TAB[n]
(geometry axis name in the channel)
MD24120 $MC_TRAFO_AX_GEOAX_ASSIGN_TAB_1[n]
(assignment of GEO axis to channel axis for transformation 1)

20106	PROG_EVENT_IGN_SINGLEBLOCK			N01	K1,Z1
-	Prog-Events ignore single block			DWORD	PowerOn
-					
-	-	0x0,0x0,0x0,0x0,0x0,0x0,0x0,0x0,0x0,0x0...	0	0x1F	2/2

Description: Event-controlled programm calls (Prog-Events) can be set regarding their single block behavior.

Bit 0 = 1 :
Prog-Event after part program start causes block change without restart

Bit 1 = 1 :
Prog-Event after part program end causes block change without restart

Bit 2 = 1 :
Prog-Event after OP reset causes block change without restart

Bit 3 = 1 :
Prog-Event after runup causes block change without restart

Bit 4 = 1 :
Prog-Event after 1st start after search run causes block change without restart

20107	PROG_EVENT_IGN_INHIBIT			N01	K1,Z1
-	Prog-Events ignore read-in disable			DWORD	PowerOn
-					
-	-	0x0,0x0,0x0,0x0,0x0,0x0,0x0,0x0,0x0,0x0...	0	0x1F	2/2

Description: Event-controlled programm calls (Prog-Events) can be set regarding their read-in disable behavior.

Bit 0 = 1 :
Prog-Event after part program start causes block change despite read-in disable

Bit 1 = 1 :
Prog-Event after part program end causes block change despite read-in disable

Bit 2 = 1 :
Prog-Event after OP reset causes block change despite read-in disable

Bit 3 = 1 :
Prog-Event after runup causes block change despite read-in disable

Bit 4 = 1 :
Prog-Event after 1st start after search run causes block change despite read-in disable

20108	PROG_EVENT_MASK			N01, -	TE3,K1
-	Setting of event-driven programm calls			DWORD	PowerOn
-					
-	-	0x0,0x0,0x0,0x0,0x0,0x0,0x0,0x0,0x0,0x0...	0	0xF	2/2

Description: Parameterization of the events, at which the user program set with MD11620 $MN_PROG_EVENT_NAME (default: _N_PROG_EVENT_SPF) is called implicitly:
Bit 0 = 1 : Part program start
Bit 1 = 1 : Part program end
Bit 2 = 1 : Operator panel reset
Bit 3 = 1 : Runup
The user program is called via the following search path:
1. /_N_CUS_DIR/_N_PROG_EVENT_SPF
2. /_N_CMA_DIR/_N_PROG_EVENT_SPF
3. /_N_CST_DIR/_N_PROG_EVENT_SPF

20109	PROG_EVENT_MASK_PROPERTIES			N01	K1
-	Properties of Prog-Events			DWORD	PowerOn
-					
-	-	0x0,0x0,0x0,0x0,0x0,0x0,0x0,0x0,0x0,0x0...	0	0x1	2/2

Description: Parameterization of additional properties of the event-controlled program calls (in short, Prog-Event), that is, the MD20108 $MC_PROG_EVENT_MASK is further parameterized.
Bit 0 = 1 :
An ASUB started from channel status RESET does not result in a Prog-Event.

20110	RESET_MODE_MASK			C11, C03	F2,K6,M3,TE4,W5,B3,K5,M1,G2,K1,K2,P1,S1,W1,2.4,2.7
-	Definition of basic control settings after reset/PP end			DWORD	Reset
-					
-	-	0x4045,0x4045,0x4045,0x4045,0x4045...	0	0x7FFFF	1/1

Description: The initial setting of the control after runup and on reset / part program end with regard to the G codes (in particular the active plane and the settable zero offset), tool length compensation and transformation is defined by setting the following bits:
Bit 0: Reset mode
Bit 1: Suppress auxiliary function output on tool selection
Bit 2: Select reset response after POWER ON; e.g. tool offset
Bit 3: Select reset response after end of test mode with reference to active tool offsets. This bit is only relevant when bits 0 and 6 are set.
It defines what "Current setting for active tool length compensation" refers to:
- the program which was active at the end of test mode
- the program which was active before test mode was switched on

Bit 4: Reserved! Setting now via MD20152 $MC_GCODE_RESET_MODE[..]
Bit 5: Reserved! Setting now via MD20152 $MC_GCODE_RESET_MODE[..]
Bit 6: Reset response "Active tool length compensation"

Bit 7: Reset response "Active kinematic transformation"
Bit 8: Reset response "Coupled-motion axes"
Bit 9: Reset response "Tangential follow-up"
Bit 10: Reset response "Synchronous spindle"
Bit 11: Reset response "Revolutional feedrate"
Bit 12: Reset response "Geo-axis replacement"
Bit 13: Reset response "Master value coupling"
Bit 14: Reset response "Basic frame"
Bits 4 to 11 are only evaluated when bit 0 = 1.
Bit 15: Function for "electronic gearbox", not relevant for tool management.
Bit 16=0: The spindle number defined by MD20090 $MC_SPIND_DEF_MASTER_SPIND is the number of the master spindle after programm end/reset.
Bit 16=1: The programmed value of SETMS is retained after programm end/reset.
Bit 17=0: The tool holder number defined by MD20124 $MC_TOOL_MANAGEMENT_TOOLHOLDER is the number of the master tool holder after programm end/reset.
Bit 17=1 The programmed value of SETMS is retained after programm end/reset.
These two bits are only relevant if bit 0=1 is also set. The bit value=0 is selected so that the previous response with bit 0=1 is retained. (Retention of the programmed values of SETMTH/SETMS after programm end already applied to bit 0=0.)
Bit 18=0 Reference axis for G96/G961/G962 according to MD20100 $MC_DIAMETER_AX_DEF. Bit 18 = 1 is recommended when using SCC with its own spindle reset (see also MD20112 $MC_START_MODE_MASK, Bit 18).
Bit 18=1 Reference axis for G96/G961/G962 is retained.
Related to:
MD20120 $MC_TOOL_RESET_VALUE
MD20130 $MC_CUTTING_EDGE_RESET_VALUE
MD20150 $MC_GCODE_RESET_VALUES
MD20152 $MC_GCODE_RESET_MODE
MD20140 $MC_TRAFO_RESET_VALUE
MD20112 $MC_START_MODE_MASK
MD20121 $MC_TOOL_PRESEL_RESET_VALUE
MD20118 $MC_GEOAX_CHANGE_RESET

20112	START_MODE_MASK			C03	K6,M3,K5,M1,K1, K2,P1,S1,W1
-	Definition of basic setting of control after part program start			DWORD	Reset
-					
-	-	0x400,0x400,0x400,0 x400,0x400,0x400...	0	0x7FFFF	1/1

Description:

The initial setting of the control at the start of the part program with respect to G codes (in particular, current plane and active settable zero offset), active tool length compensation, transformation and axis couplings is defined by setting the following bits:
Bit 0: Not assigned: MD20112 $MC_START_MODE_MASK is evaluated every time a part program is started.
Bit 1: Suppression of auxiliary function output on tool selection.
Bit 4: Start response for G code "Current plane"
Bit 5: Start response for G code "Settable zero offset"
Bit 6: Start response for "Active tool length compensation"

Bit 7: Start response for "Active kinematic transformation"
Bit 8: Start response for "Coupled-motion axes"
Bit 9: Start response for "Tangential follow-up"
Bit 10: Start response for "Synchronous spindle"
Bit 11: Reserved
Bit 12: Start response for "Geometry axis replacement"
Bit 13: Start response for "Master value coupling"
Bit 14: Start response for "Basic frame".
Bit 15: Function for electronic gearboxes (irrelevant to tool management)
Bit 16=0: The current value of SETMS is retained (it is a function of the settings in MD20110 $MC_RESET_MODE_MASK).
Bit 16=1: At program start, the spindle defined by MD20090 $MC_SPIND_DEF_MASTER_SPIND is the master spindle.
Bit 17=0: The current value of SETMH is retained (it is a function of the settings in MD20110 $MC_RESET_MODE_MASK).
Bit 17=1: At program start, the number allocated by MD20124 $MC_TOOL_MANAGEMENT_TOOLHOLDER is the number of the master tool holder.
Bit 18=0: Reference axis for G96/G961/G962 according to MD20100 $MC_DIAMETER_AX_DEF. Bit 18=1 is recommended when using SCC with its own spindle reset (see also MD20110 $MC_RESET_MODE_MASK, bit 18).
Bit 18=1: Reference axis for G96/G961/G962 is retained.
Related to:
MD20120 $MC_TOOL_RESET_VALUE
MD20130 $MC_CUTTING_EDGE_RESET_VALUE
MD20150 $MC_GCODE_RESET_VALUES
MD20152 $MC_GCODE_RESET_MODE
MD20140 $MC_TRAFO_RESET_VALUE
MD20110 $MC_RESET_MODE_MASK
MD20121 $MC_TOOL_PRESEL_RESET_VALUE
MD20118 $MC_GEOAX_CHANGE_RESET

20114	MODESWITCH_MASK			C03	K1
-	Interruption MDA by mode change			DWORD	Reset
-					
-	-	0x0,0x0,0x0,0x0,0x0,0x0,0x0,0x0,0x0,0x0...	0	0xFFFF	1/1

Description: After program interruption in MDI mode (e.g. in order to carry out a measurement on the workpiece and to correct the tool wear values or after tool breakage) the tool can be manually withdrawn from the contour by changing into JOG mode.
In this case, the control stores the coordinates of the position of the interruption and indicates the path differences traversed by the axes in JOG mode as "Repos offset". When MDI mode is selected again, the axis is repositioned on the contour. This response can be canceled by means of this machine data.
Bit 0 (LSB)= 0:
When MDI (JOG, JOGREF, JOGREPOS, MDIREF and MDIREPOS) are deselected in stopped status, the system ASUB Repos is selected.
Bit 0 (LSB) = 1:
When MDI (JOG, JOGREF, JOGREPOS, MDIREF and MDIREPOS) are deselected in stopped status, the system ASUB Repos is not selected.

Bit 1 (LSB) = 0:
If the NCK stops at a part program block in the program execution in which repositioning is not possible, alarm 16916 is generated if an attempt is made to switch to manual mode.
Bit 1 (LSB) = 1:
If the NCK stops at a part program block in the program execution in which repositioning is not possible, no alarm is generated if an attempt is made to switch to manual mode.

20116	IGNORE_INHIBIT_ASUP			C01	K1,Z1
-	Execuite interrupt program despite read-in disable			DWORD	NEW CONF
-					
-	-	0,0,0,0,0,0,0,0,0,0,0,0,0,0,0,0	-	-	2/2

Description: In spite of the set read-in disable, an assigned user ASUB is completely executed for the interrupt channel with the set bit.
Bit 0 is assigned to interrupt channel 1.
Bit 1 is assigned to interrupt channel 2, etc.
Related to:
MD20117 $MC_IGNORE_SINGLEBLOCK_ASUP

20117	IGNORE_SINGLEBLOCK_ASUP			C01	K1,Z1
-	Execute interrupt program completely despite single block			DWORD	NEW CONF
-					
-	-	0,0,0,0,0,0,0,0,0,0,0,0,0,0,0,0	-	-	2/2

Description: In spite of the set single-block processing mode, an assigned user ASUB is completely executed for the relevant channel with the set bit.
Bit 0 is assigned to interrupt channel 1.
Bit 1 is assigned to interrupt channel 2, etc.
The MD is only active with single block type 1.
Related to:
MD20116 $MC_IGNORE_INHIBIT_ASUP

20118	GEOAX_CHANGE_RESET			C03	M1,K1,Z1
-	Enable automatic geometry axis change			BOOLEAN	Reset
-					
-	-	FALSE,FALSE,FALSE,FALSE,FALSE,FALSE...	-	-	0/0

Description: 0: The current configuration of the geometry axes remains unchanged on reset and part program start. With this setting, the response is identical to that with older software versions without geometry axis replacement.
1: The configuration of the geometry axes remains unchanged on reset or part program end, depending on MD20110 $MC_RESET_MODE_MASK and, on part program start, depending on MD20112 $MC_START_MODE_MASK, or is switched to the initial state defined by MD20050 $MC_AXCONF_GEOAX_ASSIGN_TAB.
Related to:
MD20050 $MC_AXCONF_GEOAX_ASSIGN_TAB
MD20110 $MC_RESET_MODE_MASK
MD20112 $MC_START_MODE_MASK

20120	TOOL_RESET_VALUE			C03	K1,W1
-	Tool with length compens. during runup (reset/part program end).			DWORD	Reset
-					
-	-	0,0,0,0,0,0,0,0,0,0,0,0,0,0,0,0	0	32000	1/1

Description: Definition of the tool for which tool length compensation is selected during runup or on reset or part program end as a function of MD20110 $MC_RESET_MODE_MASK, and on part program start as a function of MD20112 $MC_START_MODE_MASK
Related to:
MD20110 $MC_RESET_MODE_MASK
MD20112 $MC_START_MODE_MASK

20121	TOOL_PRESEL_RESET_VALUE			C03	K1,W1
-	Preselected tool on RESET			DWORD	Reset
-					
-	-	0,0,0,0,0,0,0,0,0,0,0,0,0,0,0,0	0	32000	1/1

Description: Definition of the preselected tool in MD20310 $MC_TOOL_MANAGEMENT_MASK=1. A tool is selected after runup, or on reset or part program end as a function of MD20110 $MC_RESET_MODE_MASK, and on part program start as a function of MD20112 $MC_START_MODE_MASK.
This MD is valid only without tool management.
Related to:
MD20110 $MC_RESET_MODE_MASK
MD20112 $MC_START_MODE_MASK

20123	USEKT_RESET_VALUE			C03	-
-	Preselected value of $P_USEKT on RESET			DWORD	Reset
-					
-	-	0,0,0,0,0,0,0,0,0,0,0,0,0,0,0,0	0	0xF	0/0

Description: The system variable $P_USEKT is set with the value of this MD:
- after run-up:

As a function of MD20112 $MC_START_MODE_MASK
- after RESET or part program end:

As a function of MD20110 $MC_RESET_MODE_MASK
Related to:
MD20110 $MC_RESET_MODE_MASK
MD20112 $MC_START_MODE_MASK

20126	TOOL_CARRIER_RESET_VALUE			C03	W1
-	Active tool holder on RESET			DWORD	Reset
-					
-	-	0,0,0,0,0,0,0,0,0,0,0,0,0,0,0,0	-	-	0/0

Description: Definition of the tool holder for which tool length compensation is selected during runup or on reset or part program end as a function of MD20110 $MC_RESET_MODE_MASK and as a function of MD20112 $MC_START_MODE_MASK on part program start.
This data is valid without tool management.
Related to:
MD20110 $MC_RESET_MODE_MASK
MD20112 $MC_START_MODE_MASK

20127	CUTMOD_INIT			C08	K1,W1
-	Initialize CUTMOD after power ON			DWORD	PowerOn
-					
-	-	0,0,0,0,0,0,0,0,0,0,0,0,0,0,0,0	-2	999999999	0/0

Description: The value programmable with NC command CUTMOD is initialized automatically on power ON with the value stored in this machine data. If the value of the machine data equals -2, CUTMOD will be set to the value included in MD20126 $MC_TOOL_CARRIER_VALUE.

20130	CUTTING_EDGE_RESET_VALUE			C03	-
-	Tool edge with length compens. during runup (reset/end of pp)			DWORD	Reset
-					
-	-	1,1,1,1,1,1,1,1,1,1	0	32000	1/1

Description: Definition of the cutting edge for which tool length compensation is selected during runup or on reset or part program end as a function of MD20110 $MC_RESET_MODE_MASK, and as a function of MD20112 $MC_START_MODE_MASK on part program start.
With active tool management and with bit 0 and bit 6 set in MD20110 $MC_RESET_MODE_MASK at selection, the last offset of the tool active at power OFF - as a rule the tool on the spindle - is effective after runup.
Related to:
MD20110 $MC_RESET_MODE_MASK
MD20112 $MC_START_MODE_MASK

20132	SUMCORR_RESET_VALUE			C03	-
-	Effective resulting offset on RESET			DWORD	Reset
-					
-	-	0,0,0,0,0,0,0,0,0,0,0,0,0,0,0,0	0	6	0/0

Description: Definition of the total offset with which the tool length compensation is selected in the runup and on reset or part program end as a function of MD20110 $MC_RESET_MODE_MASK and as a function of MD20112 $MC_START_MODE_MASK on part program start.
MD18110 $MN_MM_MAX_SUMCORR_PER_CUTTEDGE determines the maximum useful value which can be entered.

20140	TRAFO_RESET_VALUE			C03	F2,TE4,M1
-	Transformation data block selected during runup (reset/pp end)			BYTE	Reset
-					
802d-cu3	-	0,0,0,0,0,0,0,0,0,0,0,0,0,0,0,0	0	20	2/2
802d-ng2	-	0,0,0,0,0,0,0,0,0,0,0,0,0,0,0,0	0	20	2/2
802d-ng3	-	0,0,0,0,0,0,0,0,0,0,0,0,0,0,0,0	0	20	2/2
802d-tm1	-	0,0,0,0,0,0,0,0,0,0,0,0,0,0,0,0	0	20	0/0
802d-tm2	-	0,0,0,0,0,0,0,0,0,0,0,0,0,0,0,0	0	20	2/2
802d-tm3	-	0,0,0,0,0,0,0,0,0,0,0,0,0,0,0,0	0	20	2/2

Description: Definition of the transformation data block which is selected during runup and on reset or part program end as a function of
MD20110 $MC_RESET_MODE_MASK, and as a function of
MD20112 $MC_START_MODE_MASK on part program start.
Number of the transformation data block (1...n) corresponding with MD24100 $MC_TRAFO_TYPE_1 bis TRAFO_TYPE_n.
Not relevant MD20110 $MC_RESET_MODE_MASK:
MD20110 $MC_RESET_MODE_MASK, Bit 0 = 0
MD20112 $MC_START_MODE_MASK

20142	TRAFO_RESET_NAME			C03	K1
-	Transformation during power up (reset/part program end)			STRING	Reset
-					
802d-cu3	-		-	-	2/2
802d-ng2	-		-	-	2/2
802d-ng3	-		-	-	2/2
802d-tm1	-		-	-	0/0
802d-tm2	-		-	-	2/2
802d-tm3	-		-	-	2/2

Description: Specifies the name of a transformation ($NT_NAME[n]) defined with the aid of kinematic chains, which is selected during power on or on reset or part program end as a function of MD20110 $MC_RESET_MODE_MASK and, on part program start, as a function of MD20112 $MC_START_MODE_MASK.
If this machine data is not empty, machine data 20140: TRAFO_RESET_VALUE is ignored. This means that TRAFO_RESET_NAME has priority over TRAFO_RESET_VALUE
MD irrelevant:
MD20110 $MC_RESET_MODE_MASK, bit 0 = 0

20144	TRAFO_MODE_MASK			C07	M1
-	Function selection of kinematic transformation			BYTE	Reset
-					
802d-cu3	-	0x0,0x0,0x0,0x0,0x0,0x0,0x0,0x0,0x0,0x0...	0	0x03	1/1
802d-ng2	-	0x0,0x0,0x0,0x0,0x0,0x0,0x0,0x0,0x0,0x0...	0	0x03	7/2
802d-ng3	-	0x0,0x0,0x0,0x0,0x0,0x0,0x0,0x0,0x0,0x0...	0	0x03	7/2
802d-tm1	-	0x0,0x0,0x0,0x0,0x0,0x0,0x0,0x0,0x0,0x0...	0	0x03	7/2
802d-tm2	-	0x0,0x0,0x0,0x0,0x0,0x0,0x0,0x0,0x0,0x0...	0	0x03	7/2
802d-tm3	-	0x0,0x0,0x0,0x0,0x0,0x0,0x0,0x0,0x0,0x0...	0	0x03	7/2

Description: The specific functionality of the kinematic transformation is selected by setting the following bits:

Bit 0 = 0:

Default behavior.

Bit 0 = 1:

The transformation as defined in MD20140 $MC_TRAFO_RESET_VALUE is persistent. That is, it is also selected with TRAFOOF and not shown in the display. This requires that the transformation defined in MD20140 $MC_TRAFO_RESET_VALUE is selected automatically after RESET and START via MD20110 $MC_RESET_MODE_MASK and MD20112 $MC_START_MODE_MASK. This means that:

MD20110 $MC_RESET_MODE_MASK bit 0 = 1 and bit 7 = 0,

MD20112 $MC_START_MODE_MASK bit 7 = 1

MD20118 $MC_GEOAX_CHANGE_RESET = TRUE

Bit 1 = 0:

Default behavior.

Bit 1 = 1:

The last active transformation is selected again after control power on.

MD20110 $MC_RESET_MODE_MASK Bit 0 = 1 and Bit 7 = 1 also have to be set.

20150	GCODE_RESET_VALUES			C11, C03	F2,TE4,K3,M1,M5,K1,K2,P1,V1
-	Initial setting of G groups			BYTE	Reset
-					
802d-cu3	70	2, 0, 0, 1, 0, 1, 1, 1, 0, 1, 0, 1, 2, 1, 2, 1, 1, 1, 1, 1, 1...	-	-	1/1
802d-ng2	70	2, 0, 0, 1, 0, 2, 1, 2, 0, 1, 0, 1, 2, 1...	-	-	1/1
802d-ng3	70	2, 0, 0, 1, 0, 2, 1, 2, 0, 1, 0, 1, 2, 1...	-	-	1/1
802d-tm1	70	2, 0, 0, 1, 0, 1, 1, 1, 0, 1, 0, 1, 2, 1, 2, 1, 1, 1, 1, 1, 1...	-	-	1/1
802d-tm2	70	2, 0, 0, 1, 0, 1, 1, 1, 0, 1, 0, 1, 2, 1, 2, 1, 1, 1, 1, 1, 1...	-	-	1/1
802d-tm3	70	2, 0, 0, 1, 0, 1, 1, 1, 0, 1, 0, 1, 2, 1, 2, 1, 1, 1, 1, 1, 1...	-	-	1/1

Description: Definition of the G codes which become active on runup and reset or at part program end depending on MD20110 $MC_RESET_MODE_MASK (up to software version 4) and MD20152 $MC_GCODE_RESET_MODE (from software version 5) and at part program start depending on MD20112 $MC_START_MODE_MASK.
The index of the G codes in the respective groups must be programmed as the default value.
For a list of the G groups and their G functions, please refer to References: Programming Manual, Fundamentals
TitleGroupDefault setting on 840D/810D

```
GCODE_RESET_VALUES[0]    12 (G1)
GCODE_RESET_VALUES[1]    20 (inactive)
GCODE_RESET_VALUES[2]    30 (inactive)
GCODE_RESET_VALUES[3]    42 (STARTFIFO)
GCODE_RESET_VALUES[4]    50 (inactive)
GCODE_RESET_VALUES[5]    61 (G17)
GCODE_RESET_VALUES[6]    71 (G40)
GCODE_RESET_VALUES[7]    81 (G500)
GCODE_RESET_VALUES[8]    90 (inactive)
GCODE_RESET_VALUES[9]   101 (G60)
GCODE_RESET_VALUES[10]   110 (inactive)
GCODE_RESET_VALUES[11]   121 (G601)
GCODE_RESET_VALUES[12]   132 (G71)
GCODE_RESET_VALUES[13]   141 (G90)
GCODE_RESET_VALUES[14]   151 (G94)
GCODE_RESET_VALUES[15]   161 (CFC)
GCODE_RESET_VALUES[16]   171 (NORM)
GCODE_RESET_VALUES[17]   181 (G450)
GCODE_RESET_VALUES[18]   191 (BNAT)
GCODE_RESET_VALUES[19]   101 (ENAT)
GCODE_RESET_VALUES[20]   211 (BRISK)
GCODE_RESET_VALUES[21]   221 (CUT2D)
GCODE_RESET_VALUES[22]   231 (CDOF)
```

```
GCODE_RESET_VALUES[23]   241 (FFWOF)
GCODE_RESET_VALUES[24]   251 (ORIWKS)
GCODE_RESET_VALUES[25]   262 (RMI)
GCODE_RESET_VALUES[26]   271 (ORIC)
GCODE_RESET_VALUES[27]   281 (WALIMON)
GCODE_RESET_VALUES[28]   291 (DIAMOF)
GCODE_RESET_VALUES[29]   301 (COMPOF)
GCODE_RESET_VALUES[30]   311 (inactive)
GCODE_RESET_VALUES[31]   321 (inactive)
GCODE_RESET_VALUES[32]   331 (FTOCOF)
GCODE_RESET_VALUES[33]   341 (OSOF)
GCODE_RESET_VALUES[34]   351 (SPOF)
GCODE_RESET_VALUES[35]   361 (PDELAYON)
GCODE_RESET_VALUES[36]   371 (FNORM)
)GCODE_RESET_VALUES[37]   381 (SPIF1)
GCODE_RESET_VALUES[38]   391 (CPRECOF)
GCODE_RESET_VALUES[39]   401 (CUTCONOF)
GCODE_RESET_VALUES[40]   411 (LFOF)
GCODE_RESET_VALUES[41]   421 (TCOABS)
GCODE_RESET_VALUES[42]   431 (G140)
GCODE_RESET_VALUES[43]   441 (G340)
GCODE_RESET_VALUES[44]   451 (SPATH)
GCODE_RESET_VALUES[45]   461 (LFTXT)
GCODE_RESET_VALUES[46]   471 (G290  SINUMERIK mode)
GCODE_RESET_VALUES[47]   483 (G460)
GCODE_RESET_VALUES[48]   491 (CP)
GCODE_RESET_VALUES[49]   501 (ORIEULER)
GCODE_RESET_VALUES[50]   511 (ORIVECT)
GCODE_RESET_VALUES[51]   521 (PAROTOF)
GCODE_RESET_VALUES[52]   531 (TOROTOF)
GCODE_RESET_VALUES[53]   541 (ORIROTA)
GCODE_RESET_VALUES[54]   551 (RTLION)
GCODE_RESET_VALUES[55]   561 (TOWSTD)
GCODE_RESET_VALUES[56]   571 (FENDNORM)
GCODE_RESET_VALUES[57]   581 (RELIEVEON)
GCODE_RESET_VALUES[58]   591 (DYNNORM)
GCODE_RESET_VALUES[59]   601 (WALCS0)
GCODE_RESET_VALUES[60]   611 (ORISOF)
:       ::
GCODE_RESET_VALUES[69]   701 (not defined)
```

20152	GCODE_RESET_MODE			C03	M1,K1,K2,P1
-	Reset response of G groups			BYTE	Reset
-					
-	70	0, 0, 0, 0, 0, 0, 0, 0, 0, 0, 0, 0, 0, 0, 0, 0, 0, 0, 0, 0...	0	1	1/1

Description: This MD is only evaluated if bit 0 is set in MD20110 $MC_RESET_MODE_MASK.
For each entry in MD20150 $MC_GCODE_RESET_VALUES (that is for each G group), this MD is used to determine whether, on reset/part program end, the setting in MD20150 $MC_GCODE_RESET_VALUES is used again (MD = 0) or the current setting is retained (MD = 1).
Example:
Here, the basic setting for the 6th G group (current plane) is read from MD20150 $MC_GCODE_RESET_VALUES at each reset / part program end:
$MC_GCODE_RESET_VALUES[5]=1 ; reset value of the 6th G group is M17
$MC_GCODE_RESET_MODE[5]=0 ; basic setting for 6th G group corresponds, after
;reset / part program end
;to MD20150 $MC_GCODE_RESET_VALUES[5]
However, if the current setting for the 6th G group (current plane) is to be retained after reset / part program end, then the following setting results:
$MC_GCODE_RESET_VALUES[5]=1 ; reset value of the 6th G group is M17
$MC_GCODE_RESET_MODE[5]=1 ; current setting for 6th G group
;is retained even after reset / part program end.
Related to:
MD20110 $MC_RESET_MODE_MASK
MD20112 $MC_START_MODE_MASK

20154	EXTERN_GCODE_RESET_VALUES			C11, C03	-
-	Initial setting of G groups in ISO mode			BYTE	Reset
-					
802d-cu3	31	1, 1, 1, 2, 1, 1, 1, 3, 4, 1, 1, 2, 2, 1, 3, 2, 1, 0, 1, 1, 1...	-	-	1/1
802d-ng2	31	1, 1, 1, 2, 1, 1, 1, 3, 4, 1, 1, 2, 2, 1, 3, 2, 1, 0, 1, 1, 1...	-	-	-1/2
802d-ng3	31	1, 1, 1, 2, 1, 1, 1, 3, 4, 1, 1, 2, 2, 1, 3, 2, 1, 0, 1, 1, 1...	-	-	-1/2
802d-tm1	31	1, 1, 1, 2, 1, 1, 1, 3, 4, 1, 1, 2, 2, 1, 3, 2, 1, 0, 1, 1, 1...	-	-	1/1
802d-tm2	31	1, 1, 1, 2, 1, 1, 1, 3, 4, 1, 1, 2, 2, 1, 3, 2, 1, 0, 1, 1, 1...	-	-	1/1
802d-tm3	31	1, 1, 1, 2, 1, 1, 1, 3, 4, 1, 1, 2, 2, 1, 3, 2, 1, 0, 1, 1, 1...	-	-	1/1

Description: When an external NC programming language is used, the G codes which become active on runup and reset or at part program end are defined as a function of MD20110 $MC_RESET_MODE_MASK and at part program start as a function of MD20112 $MC_START_MODE_MASK.

The following external programming languages are possible:
ISO2 dialect Milling
ISO3 dialect Turning
The G group division that is to be used is stated in the current SINUMERIK documentation.
The following groups within MD20154 $MC_EXTERN_GCODE_RESET_VALUES can be written:
ISO2 dialect M:
G group 2: G17/G18/G19
G group 3: G90/G91
G group 5: G94/G95
G group 6: G20/G21
G group 13: G96/G97
G group 14: G54-G59
ISO3 dialect T:
G group 2: G96/G97
G group 3: G90/G91
G group 5: G94/G95
G group 6: G20/G21
G group 16: G17/G18/G19

20156	EXTERN_GCODE_RESET_MODE			C03	-
-	Reset response of external G groups			BYTE	Reset
-					
802d-cu3	31	0, 0, 0, 0, 0, 0, 0, 0, 0, 0, 0, 0, 0, 0, 0, 0, 0, 0, 0, 0, 0...	0	1	1/1
802d-ng2	31	0, 0, 0, 0, 0, 0, 0, 0, 0, 0, 0, 0, 0, 0, 0, 0, 0, 0, 0, 0, 0...	0	1	-1/2
802d-ng3	31	0, 0, 0, 0, 0, 0, 0, 0, 0, 0, 0, 0, 0, 0, 0, 0, 0, 0, 0, 0, 0...	0	1	-1/2
802d-tm1	31	0, 0, 0, 0, 0, 0, 0, 0, 0, 0, 0, 0, 0, 0, 0, 0, 0, 0, 0, 0, 0...	0	1	1/1
802d-tm2	31	0, 0, 0, 0, 0, 0, 0, 0, 0, 0, 0, 0, 0, 0, 0, 0, 0, 0, 0, 0, 0...	0	1	1/1
802d-tm3	31	0, 0, 0, 0, 0, 0, 0, 0, 0, 0, 0, 0, 0, 0, 0, 0, 0, 0, 0, 0, 0...	0	1	1/1

Description: This MD is evaluated only if bit0 is set in MD20110 $MC_RESET_MODE_MASK (see there).
For each entry in MD20154 $MC_EXTERN_GCODE_RESET_VALUES (that is for each G group), this MD is used to determine whether, on reset/part program end, the setting in MD20154 $MC_EXTERN_GCODE_RESET_VALUES is used again (MD = 0) or the current setting is retained (MD = 1).

```
Example for ISO dialect M:
Here, the basic setting for the 14th G group (settable zero offset) is read
from MD20154 $MC_EXTERN_GCODE_RESET_VALUES at each reset / part program end:
MD20154 $MC_EXTERN_GCODE_RESET_VALUES[13]=1 ; the reset value for the 14th G
group
                                            ;is G54
MD20156 $MC_EXTERN_GCODE_RESET_MODE[13]=0 ; the basic setting for the 14th G
group
                                            ;after reset / part program end
is defined by
                                            ;MD20154
$MC_EXTERN_GCODE_RESET_VALUES[13]
                                            ;
However, if the current setting for the 14th G group is to be retained beyond
reset / part program end, this results in the following setting:
MD20154 $MC_EXTERN_GCODE_RESET_VALUES[13]=1 ;reset value for the 14th G group
                                            ;is G54
MD20156 $MC_EXTERN_GCODE_RESET_MODE[13]=1 ;current setting for the 14th
                                            ;G group is retained even after
                                            ;reset / part program end
```

20180	TOCARR_ROT_ANGLE_INCR			C08	W1
-	Rotary axis increment of orientable tool holder			DOUBLE	NEW CONF
-					
-	2	0.0, 0.0,0.0, 0.0,0.0, 0.0,0.0, 0.0...	-	-	0/0

Description:

For orientable tool carriers, this machine data defines the size of the minimum increment (in degrees) by which the first or second orientation axis can be changed (e.g. for Hirth tooth systems).
A programmed or calculated angle is rounded to the nearest value resulting from
phi = s + n * d
with integer n.
In which:
s = MD20180 $MC_TOCARR_ROT_ANGLE_INCR[i]
d = MD20182 $MC_TOCARR_ROT_ANGLE_OFFSET[i]
and i is 0 for the 1st and 1 for the 2nd axis.
There is no rounding if this machine data is equal to zero.

20182	TOCARR_ROT_ANGLE_OFFSET			C08	-
-	Rotary axis offset of orientable tool holder			DOUBLE	NEW CONF
-					
-	2	0.0, 0.0,0.0, 0.0,0.0, 0.0,0.0, 0.0...	-	-	0/0

Description:

This machine data defines the offset of the rotary axis for an orientable tool holder if its position cannot be continuously changed.
It is only evaluated if MD20180 $MC_TOCARR_ROT_ANGLE_INCR is not equal to zero.
For the precise meaning of this machine data, see the description of MD20180 $MC_TOCARR_ROT_ANGLE_INCR.

20184	TOCARR_BASE_FRAME_NUMBER			C08	K2,W1
-	Base frame number for holding machine table offset			DWORD	NEW CONF
-					
-	-	-1,-1,-1,-1,-1,-1,-1,-1,-1,-1,-1,-1,-1...	-1	15	0/0

Description: This machine data indicates into which channel-specific base frame the table offset of an orientable tool holder with a rotary table is written.
This machine data must refer to a valid base frame.
If its content is less than 0 or greater than or equal to the maximum number of base frames set in MD28081 $MC_MM_NUM_BASE_FRAMES, selection of a corresponding tool holder causes an alarm.

20188	TOCARR_FINE_LIM_LIN			C07	W1
mm	Limit of linear fine offset TCARR			DOUBLE	Immediately
-					
-	-	1.0,1.0,1.0,1.0,1.0,1.0,1.0,1.0,1.0,1.0...	-	-	0/0

Description: Indicates for each channel the input limit for the linear fine offset values of an orientable tool holder.

20190	TOCARR_FINE_LIM_ROT			C07	W1
degrees	Limit of rotary fine offset TCARR			DOUBLE	Immediately
-					
-	-	1.0,1.0,1.0,1.0,1.0,1.0,1.0,1.0,1.0,1.0...	-	-	0/0

Description: Indicates for each channel the input limit for the rotary fine offset values of an orientable tool holder.

20191	IGN_PROG_STATE_ASUP			EXP	K1
-	Do not display interrupt program execution on OPI			DWORD	NEW CONF
-					
-	-	0,0,0,0,0,0,0,0,0,0,0,0,0,0,0,0	-	-	0/0

Description: If the ASUB is started, OPI variables
progStatus and chanStatus do not change, i.e. the HMI does not see this normally short program execution.
Bit 0 is assigned to interrupt channel 1.
Bit 1 is assigned to interrupt channel 2, etc.
Korrespondiert mit:
MD20192 $MC_PROG_EVENT_IGN_PROG_STATE

20192	PROG_EVENT_IGN_PROG_STATE			EXP	-
-	Do not display the Prog-Event on OPI			DWORD	PowerOn
-					
-	-	0x0,0x0,0x0,0x0,0x0,0x0,0x0,0x0,0x0,0x0...	0	0xF	2/2

Description: Event-controlled program calls (Prog-Events) can be influenced with regard to their behavior on the OPI interface.
In this case, the progStatus and chanStatus variables are not influenced despite active Prog-Event execution and remain in the old value. Thus, the Prog-Event execution can be hidden from the HMI.
Bit 0 = 1 :
Reserved bit without effect
Bit 1 = 1 :
Prog-Event after part program end does not change progStatus and chanStatus
Bit 2 = 1 :
Prog-Event after operator panel reset does not change progStatus and chanStatus.
Bit 3 = 1 :
Prog-Event after power up does not change progStatus and chanStatus.

20193	PROG_EVENT_IGN_STOP			EXP	-
-	Prog-Events ignore the stop key			DWORD	PowerOn
-					
-	-	0x0,0x0,0x0,0x0,0x0,0x0,0x0,0x0,0x0,0x0...	0	0xF	2/2

Description: Event-controlled program calls (Prog-Events) can be influenced with regard to their behavior after pressing of the stop key.
The Stop, StopAll and StopAtEnd key of the PLC is ignored, if required.
Bit 0 = 1 :
Prog-Event after part program start delays the stop until the part program starts, i.e. the stop only becomes active in the part program, not before its start. If the part program starts with a traversing block, it is possible that it starts briefly, i.e. a short motion occurs, although Stop has already been pressed in the Start-Prog-Event.
Bit 1 = 1 :
Prog-Event after part program end ignores the stop
Bit 2 = 1 :
Prog-Event after operator panel reset ignores the stop
Bit 3 = 1 :
Prog-Event after power up ignores the stop

20196	TOCARR_ROTAX_MODE			C07	W1
-	ToolCarrier: rotary axis setting with axis positions not defined			DWORD	Immediately
-					
-	-	2,2,2,2,2,2,2,2,2,2,2,2,2,2,2	0	3	0/0

Description: The MD is bit-coded. Bit 0 applies to orientable tool holders with one axis, bit 1 for those with 2 axes.
When the axis positions of an orientable tool holder are determined from a specified frame, it might happen that the required orientation is achieved at any position of a rotary axis.
This MD specifies how the rotary axis position is defined in these cases:
If the relevant bit is 0, the position of the rotary axis will be 0; a possibly necessary rotation is performed through the specified frame.
If the relevant bit is 1, the rotation is performed by means of the rotary axis of the orientable tool holder. The resulting frame will no longer include a rotation.
Example:
A tool in its basic position points into the Z direction, and an axis of the orientable tool holder rotates the workpiece around Z (C_Axis). If the tool shall be oriented in parallel with the Z axis of a rotating frame, and if the frame only rotates around the Z axis, the tool orientation will not be changed, if the C axis is rotated. The condition saying that the tool is to point in the direction of the Z axis defined by the frame is therefore fulfilled for any position of the Z axis.

20200	CHFRND_MAXNUM_DUMMY_BLOCKS			EXP, C02, C06, C09	V1
-	Empty blocks with chamfer/radii			BYTE	PowerOn
-					
802d-cu3	-	3,3,3,3,3,3,3,3,3,3,3,3,3,3,3,3	0	15	1/1
802d-ng2	-	3,3,3,3,3,3,3,3,3,3,3,3,3,3,3,3	0	15	0/0
802d-ng3	-	3,3,3,3,3,3,3,3,3,3,3,3,3,3,3,3	0	15	0/0
802d-tm1	-	3,3,3,3,3,3,3,3,3,3,3,3,3,3,3,3	0	15	0/0
802d-tm2	-	3,3,3,3,3,3,3,3,3,3,3,3,3,3,3,3	0	15	0/0
802d-tm3	-	3,3,3,3,3,3,3,3,3,3,3,3,3,3,3,3	0	15	1/1

Description: Indicates the maximum number of blocks without traversing information in the compensation plane (dummy blocks) that can be programmed between two blocks with traversing information when chamfer/rounding are active.

20201	CHFRND_MODE_MASK			C09	V1
-	Chamfer/rounding behavior			DWORD	Reset
-					
-	-	0x0,0x0,0x0,0x0,0x0,0x0,0x0,0x0,0x0,0x0...	0	0xFFFF	1/1

Description: Determination of the chamfer/rounding behavior

Bit 0: (LSB) Assignment of the chamfer/rounding to the preceding or following block.

This influences:

- The technology of the chamfer/rounding (feed, type of feed, M commands ...)
- The execution of the blocks without movement in the active plane (e.g. M commands, movement in the applicate) before or after a modal rounding (RNDM)

Bit 1: free

Meaning of the individual bits:

Bit 0 = 0

Chamfer/rounding is derived from the following block (default value).

The technology of the chamfer/rounding is determined by the following block. Blocks without movement (M commands) or movement only in the applicate between two movement blocks in the plane are executed before the modal rounding.

Bit 0 = 1:

Chamfer/rounding is derived from the preceding block.

The technology of the chamfer/rounding is determined by the preceding block. Blocks without movement (M commands) or movement only in the applicate between two movement blocks in the plane are executed after the modal rounding.

20202	WAB_MAXNUM_DUMMY_BLOCKS			C02, C06	W1
-	maximum number of blocks w/o traversing movement with SAR			BYTE	Reset
-					
802d-cu3	-	5,5,5,5,5,5,5,5,5,5,5,5,5,5,5	0	10	1/1
802d-ng2	-	5,5,5,5,5,5,5,5,5,5,5,5,5,5,5	0	10	0/0
802d-ng3	-	5,5,5,5,5,5,5,5,5,5,5,5,5,5,5	0	10	0/0
802d-tm1	-	5,5,5,5,5,5,5,5,5,5,5,5,5,5,5	0	10	0/0
802d-tm2	-	5,5,5,5,5,5,5,5,5,5,5,5,5,5,5	0	10	0/0
802d-tm3	-	5,5,5,5,5,5,5,5,5,5,5,5,5,5,5	0	10	1/1

Description: Maximum number of blocks which can appear between the SAR (soft approach and retraction) block and the traversing block which determines the direction of the approach or retraction tangent.

20204	WAB_CLEARANCE_TOLERANCE			C06	W1
mm	Change of direction with SAR			DOUBLE	PowerOn
-					
-	-	0.01,0.01,0.01,0.01,0.01,0.01,0.01...	-	-	2/2

Description: In the case of smooth approach and retraction, the point defined with DISCL, from which, in the case of infeed from the initial plane, traversing is carried out at lower speed (G341) or the point in which the actual approach movement begins (G 340), must lie between the initial plane and the approach plane.
If this point lies outside this interval and the deviation is less than or equal to this machine data, it is assumed that the point lies in the approach or retraction plane.
If the deviation is greater, then alarm 10741 is output.
Example:
An approach is made from position Z = 20. The SAR plane is at Z = 0. The point defined by DISCL must therefore lie between these two values. If it lies between 20.000 and 20.010 or between 0 and -0.010, it is assumed that the value 20.0 or 0.0 was programmed (under the condition that the MD has the value 0.010). The alarm is output if the position is greater than 20.010 or less than -0.010.

20210	CUTCOM_CORNER_LIMIT			C08, C06	W1
degrees	Maximum angle f. compensation blocks in tool radius compensation			DOUBLE	Reset
-					
802d-cu3	-	100.,100.,100.,100.,100.,100.,100....	0.0	150.	1/1
802d-ng2	-	100.,100.,100.,100.,100.,100.,100....	0.0	150.	0/0
802d-ng3	-	100.,100.,100.,100.,100.,100.,100....	0.0	150.	0/0
802d-tm1	-	100.,100.,100.,100.,100.,100.,100....	0.0	150.	0/0
802d-tm2	-	100.,100.,100.,100.,100.,100.,100....	0.0	150.	0/0
802d-tm3	-	100.,100.,100.,100.,100.,100.,100....	0.0	150.	1/1

Description: Where outer corners are very pointed, G451 can result in long idle paths. The system therefore switches automatically from G451 (intersection) to G450 (transition circle, with DISC where appropriate) when the outer corners are very pointed. The contour angle which can be traversed following this automatic switchover (intersection ---> transition circle) can be defined in CUTCOM_CORNER_LIMIT.

20220	CUTCOM_MAX_DISC			C08, C06	W1
-	Maximum value for DISC			DOUBLE	Reset
-					
802d-cu3	-	0.0,0.0,0.0,0.0,0.0,0.0,0.0,0.0,0.0,0.0...	0.0	75.0	1/1
802d-ng2	-	0.0,0.0,0.0,0.0,0.0,0.0,0.0,0.0,0.0,0.0...	0.0	75.0	0/0
802d-ng3	-	0.0,0.0,0.0,0.0,0.0,0.0,0.0,0.0,0.0,0.0...	0.0	75.0	0/0
802d-tm1	-	0.0,0.0,0.0,0.0,0.0,0.0,0.0,0.0,0.0,0.0...	0.0	75.0	0/0
802d-tm2	-	0.0,0.0,0.0,0.0,0.0,0.0,0.0,0.0,0.0,0.0...	0.0	75.0	0/0
802d-tm3	-	0.0,0.0,0.0,0.0,0.0,0.0,0.0,0.0,0.0,0.0...	0.0	75.0	1/1

Description: The G450 transition circle cannot produce sharp outer contour corners, because the path of the tool center point through the transition circle is controlled so that the cutting edge stops at the outer corner (programmed position).

Where sharp outer corners are to be machined with G450, the DISC instruction can be used in the program to program an overshoot. This transforms the transition circle into a conic section and the cutting edge lifts off from the outer corner.

The value range of the DISC instruction extends from 0 to theoretically 100 in steps of 1.

```
DISC = 0      ...Overshoot disabled, transition circle active
DISC = 100  ...Overshoot large enough to theoretically produce a
               response similar to intersection (G451).
```

Programmed values of DISC which are higher than those stored in CUTCOM_MAX_DISC are limited to this maximum value without output of a message. A severely non-linear alteration in the path speed can thus be avoided.

Special cases:

It is not generally meaningful to enter values higher than 50 in DISC.

It is therefore not possible to enter values > 75.

20230	CUTCOM_CURVE_INSERT_LIMIT			C08, C06	W1
-	Maximum angle for calculation of intersection with TRC			DOUBLE	Reset
-					
802d-cu3	-	10.,10.,10.,10.,10.,10., 10.,10.,10....	0.0	150.	1/1
802d-ng2	-	10.,10.,10.,10.,10.,10., 10.,10.,10....	0.0	150.	0/0
802d-ng3	-	10.,10.,10.,10.,10.,10., 10.,10.,10....	0.0	150.	0/0
802d-tm1	-	10.,10.,10.,10.,10.,10., 10.,10.,10....	0.0	150.	0/0
802d-tm2	-	10.,10.,10.,10.,10.,10., 10.,10.,10....	0.0	150.	0/0
802d-tm3	-	10.,10.,10.,10.,10.,10., 10.,10.,10....	0.0	150.	1/1

Description: Where outer corners are very flat, G450 (transition circle) and G451 (intersection) approximate each other more and more. In such a case, it is no longer useful to insert a transition circle. Especially with 5-axis machining, it is not allowed to insert a transition circle at these outer corners, as this might lead to losses in velocity during continuous-path mode (G64).
That is why the system switches automatically from G450 (transition circle, possibly with DISC) to G451 (intersection) in the case of very flat outer corners. The contour angle (in degrees), as of which the automatic switchover (transition circle ---> intersection) is to be carried out, can be specified in CUTCOM_CURVE_INSERT_LIMIT.

20240	CUTCOM_MAXNUM_CHECK_BLOCKS			C08, C02	W1
-	Blocks for look-ahead contour calculation with TRC			DWORD	PowerOn
-					
802d-cu3	-	4,4,4,4,4,4,4,4,4,4,4,4, 4,4,4,4	2	10000	1/1
802d-ng2	-	4,4,4,4,4,4,4,4,4,4,4,4, 4,4,4,4	2	10000	0/0
802d-ng3	-	4,4,4,4,4,4,4,4,4,4,4,4, 4,4,4,4	2	10000	0/0
802d-tm1	-	4,4,4,4,4,4,4,4,4,4,4,4, 4,4,4,4	2	10000	0/0
802d-tm2	-	4,4,4,4,4,4,4,4,4,4,4,4, 4,4,4,4	2	10000	0/0
802d-tm3	-	4,4,4,4,4,4,4,4,4,4,4,4, 4,4,4,4	2	10000	1/1

Description: Indicates the maximum number of blocks with traversing information at the offset plane that are considered simultaneously for collision detection with active radius compensation.

20250	CUTCOM_MAXNUM_DUMMY_BLOCKS			C08, C02	W1
-	maximum number of blocks without traversing motion in TRC			DWORD	PowerOn
-					
802d-cu3	-	5	0	1000	1/1
802d-ng2	-	5	0	1000	0/0
802d-ng3	-	5	0	1000	0/0
802d-tm1	-	5	0	1000	0/0
802d-tm2	-	5	0	1000	0/0
802d-tm3	-	5	0	1000	1/1

Description: During active TRC only program blocks with movements of geometry axes perpendicular to the current tool orientation are normally programmed. Nevertheless, individual intermediate blocks that do not contain such path information may also be programmed during active TRC. For example:

- Movements in the direction of tool orientation
- Movements in axes that are not geometry axes
- Auxiliary functions
- In general: Blocks that are taken over into the main run and executed there

The maximum number of intermediate blocks is defined with this MD. If the value is exceeded, alarm 10762 "Too many empty blocks between 2 traversing blocks during active tool radius compensation" is output.

Note:

Comment blocks, arithmetic blocks and empty blocks are not intermediate blocks in the sense of this MD and can therefore be programmed in any number (without an alarm being triggered).

20252	CUTCOM_MAXNUM_SUPPR_BLOCKS			EXP, C01, C08, C02	W1
-	Maximum number of blocks with compensation suppression			DWORD	PowerOn
-					
-	-	5,5,5,5,5,5,5,5,5,5,5,5,5,5,5,5	0	1000	0/0

Description: Indicates the maximum number of blocks for active tool radius compensation, in which the function "Keep radius offset constant" (CUTCONON or reprogramming of G41 / G42 during active TRC) may be active.

Note:

The restriction of the number of blocks with active CUTONON is necessary in order to carry out repositioning in this situation too. Increasing this value for the machine data can lead to an increased memory requirement for NC blocks.

20260	PATH_IPO_IS_ON_TCP			EXP, C09, C05	-
-	Velocity control with spline			BOOLEAN	PowerOn
-					
-	-	FALSE,FALSE,FALSE,FALSE,FALSE,FALSE...	-	-	0/0

Description: For SW-internal function optimization.

20262	SPLINE_FEED_PRECISION			EXP, C09, C05	-
-	Permissible rel. error of path velocity for spline			DOUBLE	PowerOn
-					
-	-	0.001,0.001,0.001,0.001,0.001,0.001...	0.000001	1.0	0/0

Description: This machine data is evaluated only if MD28540 $MC_MM_ARCLENGTH_SEGMENTS is greater than 0.
The factor indicates how large the relative error of the path velocity may be for splines, compressor and polynomial interpolation. The smaller the factor the more computing time is required for preprocessing.
Furthermore, more memory is required to display the arc length function (see 28540 $MC_MM_ARCLENGTH_SEGMENTS).
Example:
SPLINE_FEED_PRECISION=0.1, programmed path velocity=1000 mm/min.
The actual path velocity for polynomial and spline interpolations may then vary within the range between 900 and 1100 mm/min.

20270	CUTTING_EDGE_DEFAULT			C11, C03	H2,W1
-	Initial position of tool cutting edge without programming			DWORD	PowerOn
-					
-	-	1,1,1,1,1,1,1,1,1,1,1,1,1,1,1,1	-2	32000	1/1

Description: Default cutting edge after tool change
If no cutting edge has been programmed after a tool change, the default cutting edge number set in MD20270 $MC_CUTTING_EDGE_DEFAULT is used.
Value
:= 0
Initially, no cutting edge is active after a tool change.
The cutting edge is not selected until D programming.
:= 1
MD_SLMAXCUTTINGEDGENUMBER
No. of cutting edge (MD_SLMAXCUTTINGEDGENUMBER=9 is valid up to P4)
:= -1
Cutting edge number of old tool also applies to new tool.
:= -2
Cutting edge (correction) of old tool remains active until D is programmed. This means that the old tool remains the active tool until D is programmed. In other words, the tool on the spindle remains the programmed tool until D is programmed.
Example:
MD20270 $MC_CUTTING_EDGE_DEFAULT = 1;
After a tool change, the first cutting edge is active if no other cutting edge has been programmed.

20272	SUMCORR_DEFAULT			C03	H2,W1
-	Initial position resulting offset without program			DWORD	PowerOn
-					
-	-	0,0,0,0,0,0,0,0,0,0,0,0,0,0,0,0	-1	6	0/0

Description: The number of the total offset of the cutting edge which becomes active when a new cutting edge compensation is activated without a programmed DL value being available.
MD18110 $MN_MM_MAX_SUMCORR_PER_CUTTEDGE
defines the maximum useful value which can be entered.
Value Meaning
> 0 Number of the total offset
= 0 No total offset active with D programming
= 1 The total offset number for the previously programmed D is used.
Related to:
MD20270 $MC_CUTTING_EDGE_DEFAULT.

20310	TOOL_MANAGEMENT_MASK			C09	P3 pl,P3 sl
-	Activation of tool management functions			DWORD	PowerOn
-					
802d-cu3	-	0x0,0x0,0x0,0x0,0x0,0x0,0x0,0x0,0x0,0x0...	0	0xFFFFFFF	2/2
802d-ng2	-	0x0,0x0,0x0,0x0,0x0,0x0,0x0,0x0,0x0,0x0...	0	0xFFFFFFF	2/2
802d-ng3	-	0x0,0x0,0x0,0x0,0x0,0x0,0x0,0x0,0x0,0x0...	0	0xFFFFFFF	2/2
802d-tm1	-	0x0,0x0,0x0,0x0,0x0,0x0,0x0,0x0,0x0,0x0...	0	0xFFFFFFF	0/0
802d-tm2	-	0x0,0x0,0x0,0x0,0x0,0x0,0x0,0x0,0x0,0x0...	0	0xFFFFFFF	2/2
802d-tm3	-	0x0,0x0,0x0,0x0,0x0,0x0,0x0,0x0,0x0,0x0...	0	0xFFFFFFF	2/2

Description: Value = 0: no tool monitoring
Value = 0x2: tool monitoring activated (possible only if "Tool monitoring" option is available)
Related to:
MD18080 $MN_MM_TOOL_MANAGEMENT_MASK

20320	TOOL_TIME_MONITOR_MASK			C06, C09	-
-	Time monitoring for tool in tool holder			DWORD	PowerOn
-					
802d-cu3	-	0x1	-	-	2/2
802d-ng2	-	0x1	-	-	2/2
802d-ng3	-	0x1	-	-	2/2
802d-tm1	-	0x0	-	-	2/2
802d-tm2	-	0x1	-	-	2/2
802d-tm3	-	0x1	-	-	2/2

Description: Activation of the tool time monitoring for the tool holders and spindles 1..x.
As soon as the path axes have been traversed (not with G00, always with G63), the tool time monitoring data of the active D compensation are updated for the tool in the selected tool holder, which is also the master tool holder.
Bit 0...x-1: Monitoring of the tool in tool holder 1...x

20350	TOOL_GRIND_AUTO_TMON			C06, C09	-
-	Activation of tool monitoring. 0/1: Monitoring off/on			BYTE	PowerOn
-					
802d-cu3	-	0,0,0,0,0,0,0,0,0,0,0,0,0,0,0,0	0	1	1/1
802d-ng2	-	0,0,0,0,0,0,0,0,0,0,0,0,0,0,0,0	0	1	1/1
802d-ng3	-	0,0,0,0,0,0,0,0,0,0,0,0,0,0,0,0	0	1	1/1
802d-tm1	-	0,0,0,0,0,0,0,0,0,0,0,0,0,0,0,0	0	1	0/0
802d-tm2	-	0,0,0,0,0,0,0,0,0,0,0,0,0,0,0,0	0	1	0/0
802d-tm3	-	0,0,0,0,0,0,0,0,0,0,0,0,0,0,0,0	0	1	0/0

Description: This MD is used to define whether tool monitoring is switched on automatically if tool length compensation for a grinding tool with monitoring is selected (odd type number types 401 - 499).
TOOL_GRIND_AUTO_TMON = 1 : Automatic monitoring switched on
TOOL_GRIND_AUTO_TMON = 0 : Automatic monitoring switched off

20360	TOOL_PARAMETER_DEF_MASK			C09	M5,P1,W1
-	Definition of tool parameters			DWORD	PowerOn
-					
-	-	0x0,0x0,0x0,0x0,0x0,0x0,0x0,0x0,0x0,0x0...	0	0xFFFF	2/2

Description: Bit 0=0:For turning tools the wear parameter of the transverse axis X is calculated as a radius value.
Bit 0=1:For turning tools the wear parameter of the transverse axis X is calculated as a diameter value.

20370	SHAPED_TOOL_TYPE_NO			C01, C08	-
-	Tool type number for contour tools			DWORD	Immediately
-					
-	4	0, 0, 0, 0,0, 0, 0, 0,0, 0, 0, 0...	-	-	0/0

Description: Indicates for each channel max. two number ranges for tool types that are treated as forming tools. Therefore individual ranges are possible both for grinding and for turning tools.
The first range is specified by the first and the second number, the second range by the third and fourth number.
If the first number is not smaller than the second one (the same applies for the third and fourth number), no range will be defined, but two individual numbers will be specified instead.
The numbers 400 through 599 are permissible (tool type numbers for turning and grinding tools), and also value 0 (no tool type number defined).
Examples:
400 405 590 596 : Tool types 400-405 and 590-596 are contour tools
410 400 590 596 : tool types 400, 410 and 590-596 are contour tools
450   0 420 430 : Tool types 450 and 420-430 are contour tools

20372	SHAPED_TOOL_CHECKSUM			C01, C08	-
-	Checksum test for contour tools			BOOLEAN	Immediately
-					
-	-	FALSE,FALSE,FALSE,FALSE,FALSE,FALSE...	-	-	0/0

Description: Indicates for each channel whether for completion of the contour tool definition an edge must be available that includes the negative sums of tool length components and tool radius of the previous edges.

20380	TOOL_CORR_MODE_G43G44			C01, C08, C11	-
-	Treatment of tool length compensation with G43 / G44			BYTE	Reset
-					
802d-cu3	-	0,0,0,0,0,0,0,0,0,0,0,0,0,0,0,0	0	2	2/2
802d-ng2	-	0,0,0,0,0,0,0,0,0,0,0,0,0,0,0,0	0	2	-1/2
802d-ng3	-	0,0,0,0,0,0,0,0,0,0,0,0,0,0,0,0	0	2	-1/2
802d-tm1	-	0,0,0,0,0,0,0,0,0,0,0,0,0,0,0,0	0	2	2/2
802d-tm2	-	0,0,0,0,0,0,0,0,0,0,0,0,0,0,0,0	0	2	2/2
802d-tm3	-	0,0,0,0,0,0,0,0,0,0,0,0,0,0,0,0	0	2	2/2

Description: This machine data determines in ISO dialect M (G43 / G44) the way in which length compensations programmed with H are processed.
0: Mode A
  Tool length H always acts on the third geometry axis (usually Z)

1: Mode B

Tool length H acts, depending on the active plane, on one of the three geometry axes. This means with

G17 on the 3rd geometry axis (usually Z)

G18 on the 2nd geometry axis (usually Y)

G19 on the 1st geometry axis (usually X)

In this mode, compensations in all three geometry axes can be configured through multiple programming, i.e. through the activation of one component, the length compensation possibly active in another axis is not deleted.

2: Mode C

The tool length acts, independent of the active plane, on the axis that has simultaneously been programmed with H. Otherwise, the response is the same as with mode B.

20382	TOOL_CORR_MOVE_MODE			C01, C08	-
-	Traversing of tool length compensation			BOOLEAN	Reset
-					
-	-	FALSE,FALSE,FALSE,FALSE,FALSE,FALSE...	-	-	1/1

Description: This machine data determines how the tool length compensations are traversed.
0: A tool length compensation is only traversed if the associated axis has been programmed (behavior as in previous software versions)
1: Tool lengths are always traversed independently of whether the associated axes are programmed or not.

20384	TOOL_CORR_MULTIPLE_AXES			C01, C08, C11	-
-	Tool length compensation in several axes simultaneously			BOOLEAN	Reset
-					
802d-cu3	-	TRUE,TRUE,TRUE,TRUE,TRUE,TRUE,TRUE...	-	-	1/1
802d-ng2	-	TRUE,TRUE,TRUE,TRUE,TRUE,TRUE,TRUE...	-	-	-1/2
802d-ng3	-	TRUE,TRUE,TRUE,TRUE,TRUE,TRUE,TRUE...	-	-	-1/2
802d-tm1	-	TRUE,TRUE,TRUE,TRUE,TRUE,TRUE,TRUE...	-	-	1/1
802d-tm2	-	TRUE,TRUE,TRUE,TRUE,TRUE,TRUE,TRUE...	-	-	1/1
802d-tm3	-	TRUE,TRUE,TRUE,TRUE,TRUE,TRUE,TRUE...	-	-	1/1

Description: This machine data determines for tool length compensation in ISO dialect M (ISO2) (G43 / G44), whether the compensation shall be allowed in mode C (selection of the axis on which the compensation is acting by specifying the corresponding axis letter) to act on several axes simultaneously.
If this machine data is 1, this type of programming is allowed; otherwise it is rejected with an alarm.

20390	TOOL_TEMP_COMP_ON			C01, C08	K3,W1
-	Activation of temperature compensation for tool length			BOOLEAN	Reset
-					
-	-	FALSE,FALSE,FALSE,FALSE,FALSE,FALSE...	-	-	1/1

Description: This machine data activates the temperature compensation in tool direction (see also SD42960 $SC_TOOL_TEMP_COMP)

20392	TOOL_TEMP_COMP_LIMIT			C01, C08	W1
mm	Max. temperature compensation for tool length			DOUBLE	Reset
-					
-	3	1.0, 1.0 , 1.0,1.0, 1.0 , 1.0...	-	-	1/1

Description: With temperature compensation, this machine data indicates the maximum permissible value for the tool length for each geometry axis.
If a temperature compensation value larger than this limit value is entered, it will be limited without an alarm.

20396	TOOL_OFFSET_DRF_ON			C01, C08	-
-	Handwheel override in tool direction			BOOLEAN	Reset
-					
-	-	FALSE,FALSE,FALSE,FALSE,FALSE,FALSE...	-	-	-1/2

Description: This machine data activates the handwheel override in tool direction.
When this machine data is set, a handwheel override is active in the axis that is assigned to length L1 of the active tool, in the direction defined by tool orientation.
Example:
G17 is active; the tool is a milling tool; tool length L1 is therefore assigned to the Z axis (the 3rd geometry axis).
When the tool (e.g. with active 5-axis transformation) is turned around the Y axis by 90 degrees, so that it shows in X direction, a handwheel override becomes active in the 3rd axis in the X axis.

20400	LOOKAH_USE_VELO_NEXT_BLOCK			EXP, C05	B1
-	LookAhead following block velocity			BOOLEAN	PowerOn
-					
802d-cu3	-	TRUE,TRUE,TRUE,TRUE,TRUE,TRUE,TRUE...	-	-	1/1
802d-ng2	-	TRUE,TRUE,TRUE,TRUE,TRUE,TRUE,TRUE...	-	-	0/0
802d-ng3	-	TRUE,TRUE,TRUE,TRUE,TRUE,TRUE,TRUE...	-	-	0/0
802d-tm1	-	TRUE,TRUE,TRUE,TRUE,TRUE,TRUE,TRUE...	-	-	0/0
802d-tm2	-	TRUE,TRUE,TRUE,TRUE,TRUE,TRUE,TRUE...	-	-	0/0
802d-tm3	-	TRUE,TRUE,TRUE,TRUE,TRUE,TRUE,TRUE...	-	-	1/1

Description: For SW-internal function optimization.

20430	LOOKAH_NUM_OVR_POINTS			EXP, C02, C05	B1
-	Number of override characteristics for LookAhead			DWORD	PowerOn
-					
802d-cu3	-	1,1,1,1,1,1,1,1,1,1,1,1,1,1,1,1	0	2	1/1
802d-ng2	-	1,1,1,1,1,1,1,1,1,1,1,1,1,1,1,1	0	2	0/0
802d-ng3	-	1,1,1,1,1,1,1,1,1,1,1,1,1,1,1,1	0	2	0/0
802d-tm1	-	1,1,1,1,1,1,1,1,1,1,1,1,1,1,1,1	0	2	0/0
802d-tm2	-	1,1,1,1,1,1,1,1,1,1,1,1,1,1,1,1	0	2	0/0
802d-tm3	-	1,1,1,1,1,1,1,1,1,1,1,1,1,1,1,1	0	2	1/1

Description: For SW-internal function optimization.

20440	LOOKAH_OVR_POINTS			EXP, C05	B1
-	Override switch points for Look Ahead			DOUBLE	PowerOn
-					
802d-cu3	2	1.0, 0.2,1.0, 0.2,1.0, 0.2,1.0, 0.2...	0.2	2.0	1/1
802d-ng2	2	1.0, 0.2,1.0, 0.2,1.0, 0.2,1.0, 0.2...	0.2	2.0	0/0
802d-ng3	2	1.0, 0.2,1.0, 0.2,1.0, 0.2,1.0, 0.2...	0.2	2.0	0/0
802d-tm1	2	1.0, 0.2,1.0, 0.2,1.0, 0.2,1.0, 0.2...	0.2	2.0	0/0
802d-tm2	2	1.0, 0.2,1.0, 0.2,1.0, 0.2,1.0, 0.2...	0.2	2.0	0/0
802d-tm3	2	1.0, 0.2,1.0, 0.2,1.0, 0.2,1.0, 0.2...	0.2	2.0	1/1

Description: For SW-internal function optimization.

20442	LOOKAH_SYSTEM_PARAM			EXP	-
-	System parameter for extended LookAhead			DOUBLE	NEW CONF
-					
-	20	0., 0., 0., 0., 0., 0., 0., 0., 0., 0., 0., 0., 0., 0., 0.,....	-	-	0/0

Description: System parameter for extended LookAhead.

20443	LOOKAH_FFORM			EXP, C05	-
-	Activate extended LookAhead			BYTE	NEW CONF
-					
-	5	0, 0, 0, 0, 0,0, 0, 0, 0, 0...	0	5	0/0

Description: The MD specifies for which technology group the extended LookAhead is active.
Value 0: default LookAhead; value 1: extended LookAhead
e.g. MD20443 $MC_LOOKAH_FFORM[4]=1; i.e. activation for DYNFINISH.
Entry for all dynamic G code groups.
When changing between the default LookAhead and the extended LookAhead or vice versa the continuous-path mode is interrupted by an interpolatory stop.

20450	LOOKAH_RELIEVE_BLOCK_CYCLE			EXP, C05	B1
-	Relief factor for block cycle time			DOUBLE	PowerOn
-					
-	-	0.0,0.0,0.0,0.0,0.0,0.0, 0.0,0.0,0.0...	-	-	2/2

Description: Block cycle problems occur for the following reason:
The traversing length of the NC blocks to be processed is so short that the Look Ahead function must reduce the machine velocity to provide enough time for block preparation. In this situation, constant deceleration and acceleration of the path motion can occur.
This machine data defines the extent to which such velocity fluctuations are to be smoothed.
Special cases:
Values up to approx. 1.0 are appropriate.
The value 0.0 means that the function is deactivated.

20455	LOOKAH_FUNCTION_MASK			EXP, C05	-
-	Look Ahead special functions			BYTE	NEW CONF
-					
-	-	1,1,1,1,1,1,1,1,1,1,1,1,1,1,1,1	0	1	0/0

Description: Look Ahead special functions:
Bit 0 = 1:
The Safety Integrated setpoint limitation is already taken into account in Look Ahead.

20460	LOOKAH_SMOOTH_FACTOR			EXP, C05	B1
%	Smoothing factor for Look Ahead			DOUBLE	NEW CONF
-					
-	-	0.0,0.0,0.0,0.0,0.0,0.0,0.0,0.0,0.0,0.0...	0.	500.0	2/2

Description: A smoothing factor can be defined to give a more stable path velocity control.
It defines the maximum permitted productivity loss.
Acceleration procedures which contribute less than this factor to a shorter program run time are then not executed.
In this case, only those acceleration procedures whose frequency lies above the frequency parameterized in MD32440 $MA_LOOKAH_FREQUENCY are taken into account.
The entry of 0.0 deactivates the function.

20462	LOOKAH_SMOOTH_WITH_FEED			EXP, C05	B1
-	Path velocity smoothing with programmed feed			BOOLEAN	NEW CONF
-					
802d-cu3	-	TRUE,TRUE,TRUE,TRUE,TRUE,TRUE,TRUE,TRUE...	-	-	1/1
802d-ng2	-	TRUE,TRUE,TRUE,TRUE,TRUE,TRUE,TRUE,TRUE...	-	-	0/0
802d-ng3	-	TRUE,TRUE,TRUE,TRUE,TRUE,TRUE,TRUE,TRUE...	-	-	0/0
802d-tm1	-	TRUE,TRUE,TRUE,TRUE,TRUE,TRUE,TRUE,TRUE...	-	-	0/0
802d-tm2	-	TRUE,TRUE,TRUE,TRUE,TRUE,TRUE,TRUE,TRUE...	-	-	0/0
802d-tm3	-	TRUE,TRUE,TRUE,TRUE,TRUE,TRUE,TRUE,TRUE...	-	-	1/1

Description: The MD defines whether the programmed feed is also taken into account for smoothing the path velocity. In these cases, the factor defined in MD20460 $MC_LOOKAH_SMOOTH_FACTOR can be better maintained when the override is set to 100%.
Related to:
MD32440 $MA_LOOKAH_FREQUENCY,
MD20460 $MC_LOOKAH_SMOOTH_FACTOR

20464	PATH_MODE_MASK			EXP, C05	-
-	Path behavior			DWORD	Reset
-					
-	-	0,0,0,0,0,0,0,0,0,0,0,0,0,0,0,0	0	0xffff	0/0

Description: This machine data is used to influence the path action
Bit0:
If only rotary axes are traversed in the block as path axes with active G700, the programmed rotary axis velocity corresponds to
0: [degrees/min]
1: [25.4*degrees/min]

20465	ADAPT_PATH_DYNAMIC			EXP, C05	B1
-	Adaptation of path dynamic response			DOUBLE	NEW CONF
-					
-	2	1.0, 1.0,1.0, 1.0,1.0, 1.0,1.0, 1.0...	1.0	100.0	0/0

Description: This adaptation factor can be used to reduce the dynamics of changes in tool path velocity.
ADAPT_PATH_DYNAMIC[0] is effective with Brisk, reducing the permissible acceleration
ADAPT_PATH_DYNAMIC[1] is effective with Soft, reducing the permissible jerk
Considering only acceleration processes using a frequency above the frequency parameterized in MD32440 $MA_LOOKAH_FREQUENCY.
To disable this function, enter 1.0.

20470	CPREC_WITH_FFW			EXP, C06, C05	K6
-	Programmable contour accuracy			BOOLEAN	PowerOn
-					
-	-	FALSE,FALSE,FALSE,FALSE,FALSE,FALSE...	-	-	0/0

Description: This machine data defines the behavior of the programmable function CPRECON in conjunction with feedforward control.
FALSE: The CPRECON function is inactive when feedforward control is activated simultaneously.
TRUE: CPRECON is also active with feedforward control.
Related to:
SD42450 $SC_CONTPREC, SD42460 $SC_MINFEED

20485	COMPRESS_SMOOTH_FACTOR			EXP, C05	B1
-	Smoothing by compressor			DOUBLE	NEW CONF
-					
-	5	0., 0., 0., 0., 0.,0., 0., 0., 0., 0....	0.	1.	1/1

Description: Smoothing of the programmed block end points with compressor type COMPCAD.
Value 0: no smoothing. Value 1: maximum smoothing.
Entry for all dynamic G code groups.

20486	COMPRESS_SPLINE_DEGREE			EXP, C05	B1
-	Compressor spline degree			BYTE	NEW CONF
-					
-	5	3, 3, 3, 3, 3,3, 3, 3, 3, 3...	3	5	0/0

Description: Spline degree for compressor type COMPCAD. Value 3 is recommended; value 5 may be possible for roughing, if soft and rapid movements are more important than accuracy
Entry for all dynamic G code groups.

20490	IGNORE_OVL_FACTOR_FOR_ADIS			EXP	B1
-	G641/G642 independent of overload factor			BOOLEAN	NEW CONF
-					
802d-cu3	-	FALSE,FALSE,FALSE,FALSE,FALSE,FALSE...	-	-	1/1
802d-ng2	-	FALSE,FALSE,FALSE,FALSE,FALSE,FALSE...	-	-	1/1
802d-ng3	-	FALSE,FALSE,FALSE,FALSE,FALSE,FALSE...	-	-	1/1
802d-tm1	-	FALSE,FALSE,FALSE,FALSE,FALSE,FALSE...	-	-	0/0
802d-tm2	-	FALSE,FALSE,FALSE,FALSE,FALSE,FALSE...	-	-	1/1
802d-tm3	-	FALSE,FALSE,FALSE,FALSE,FALSE,FALSE...	-	-	1/1

Description: A block transition is normally only smoothed with G641 and G642 when the path velocity at block transition is reduced by the overload factor set in MD32310 $MA_MAX_ACCEL_OVL_FACTOR. When SOFT is active, the maximum jerk occurring at block transitions is also limited by MD32432 $MA_PATH_TRANS_JERK_LIM. This means that the effect of smoothing with G641 and G642 depends on the values set for the overload factor and possibly for the maximum jerk.
By setting MD20490 $MC_IGNORE_OVL_FACTOR_FOR_ADIS = TRUE a block transition can be smoothed with G641 and G642, irrespectively of the values set for the overload factor.

20500	CONST_VELO_MIN_TIME			EXP, C05	B2
s	Minimum time with constant velocity			DOUBLE	PowerOn
-					
-	-	0.0,0.0,0.0,0.0,0.0,0.0,0.0,0.0,0.0,0.0...	0.0	0.1	2/2

Description: Defines the minimum time for constant velocity during transition from acceleration to deceleration in short blocks in which the set velocity cannot be reached. Entering a time of at least several IPO cycles prevents a direct transition from the acceleration to the deceleration phase and thus reduces the acceleration jump to half. This acceleration limitation is only active with the acceleration profile BRISK.
MD irrelevant for:
Look Ahead does not take account of this function.

20550	EXACT_POS_MODE			EXP	B1
-	Exact stop conditions on G00/G01.			BYTE	NEW CONF
-					
-	-	0,0,0,0,0,0,0,0,0,0,0,0,0,0,0,0	0	33	2/2

Description: Configuration of the exact stop conditions for G00 and other G codes of the 1st G code group.
The MD is decimal-coded. The units digits define the behavior at G00 (infeed motion) and the tens digits the behavior of all the other G codes of the 1st group ("machining G codes").
x0: At G00, the relevant programmed exact stop conditions become active.
x1: At G00, G601 (fine positioning window) becomes active independent of the programmed exact stop condition.
x2: At G00, G602 (coarse positioning window) becomes active independent of the programmed exact stop condition.
x3: At G00, G603 (setpoint value reached) becomes active independent of the programmed exact stop condition.
0x: At the machining G codes, the relevant programmed exact stop conditions become active.
1x: At the machining G codes, G601 (fine positioning window) becomes active independent of the programmed exact stop condition.
2x: At the machining G codes, G602 (coarse positioning window) becomes active independent of the programmed exact stop condition.
3x: At the machining G codes, G603 (setpoint value reached) becomes active independent of the programmed exact stop condition.
The values of the units digits and tens digits are added.
For example, the value of EXACT_POS_MODE = 2 means that the exact stop condition G602 is always activated automatically at G00, independently of which exact stop condition was programmed. At all other G codes of group 1, the programmed exact stop condition becomes active.

20552	EXACT_POS_MODE_G0_TO_G1			EXP	B1
-	Exact stop condition at G00-G01 transition			BYTE	NEW CONF
-					
-	-	0,0,0,0,0,0,0,0,0,0,0,0,0,0,0,0	0	5	2/2

Description: Configuration of a stop at transition from G00 to a different G code of the 1st G code group, and also vice versa, at transition from non-G00 to G00 in continuous-path mode.
In exact-stop mode, the positioning window programmed or set in MD20550 $MC_EXACT_POS_MODE is used.
The following applies:
0: No additional stop, no control of exact stop
1: Behavior active as with G601 (positioning window, fine).
2: Behavior active as with G602 (positioning window, coarse).
3: Behavior active as with G603 (setpoint reached).
4: As 0,
in addition, the override of the subsequent non-G00 block is taken into account in the G00 block via LookAhead in the case of a change from G00 to non-G00.

5: As 0,
in addition, the override of the subsequent block is taken into account via LookAhead in the case of a change from G00 to non-G00 and non-G00 to G00.

20600	MAX_PATH_JERK			C05	B1,B2
m/s³	Path-related maximum jerk			DOUBLE	NEW CONF
-					
802d-cu3	5	1.e6, 1.e6, 1.e6, 1.e6, 1.e6	1.e-9	-	1/1
802d-ng2	5	1.e6, 1.e6, 1.e6, 1.e6, 1.e6	1.e-9	-	0/0
802d-ng3	5	1.e6, 1.e6, 1.e6, 1.e6, 1.e6	1.e-9	-	1/1
802d-tm1	5	1.e6, 1.e6, 1.e6, 1.e6, 1.e6	1.e-9	-	0/0
802d-tm2	5	1.e6, 1.e6, 1.e6, 1.e6, 1.e6	1.e-9	-	0/0
802d-tm3	5	1.e6, 1.e6, 1.e6, 1.e6, 1.e6	1.e-9	-	1/1

Description: The jerk limitation restricts the path acceleration change in SOFT mode. The path acceleration divided by the jerk limitation value produces a time in which the acceleration change takes place.
The jerk limitation is activated on the path by the NC command SOFT, and deactivated by BRISK.
MD irrelevant for:
Error states that lead to a rapid stop. In addition, the limitation is also inactive for positioning axes.
There is an entry for each dynamic G code group.

20602	CURV_EFFECT_ON_PATH_ACCEL			EXP, C05	B1,B2
-	Effect of path curvature on path dynamic			DOUBLE	NEW CONF
-					
-	5	0., 0., 0., 0., 0.,0., 0., 0., 0., 0....	0.	0.95	1/1

Description: This MD is used to determine whether the reaction of path curvature on path acceleration and path velocity is taken into account.
0:
Not taken into account
> 0:
If required, the path velocity and path acceleration are reduced in order to keep a sufficient reserve on the machine axes for centripetal acceleration.
0.75: Recommended setting.
MD20602 $MC_CURV_EFFECT_ON_PATH_ACCEL defines the proportion of the axis accelerations (see MD32300 $MA_MAX_AX_ACCEL[..]) that can be used for centripetal acceleration. The remainder is used for changing the path velocity.
Centripetal acceleration is not required for linear blocks; the full axis acceleration is therefore available for the path acceleration. On slightly curved contours or with a sufficiently low maximum path feedrate $MC_CURV_EFFECT_ON_PATH_ACCEL has only a partial or no effect. Accordingly, the path acceleration is higher than that specified by (1. - MD20602 $MC_CURV_EFFECT_ON_PATH_ACCEL) * MD32300 $MA_MAX_AX_ACCEL[..].
There is an entry for each dynamic G code group.

20603	CURV_EFFECT_ON_PATH_JERK			EXP, C05	B1
-	Effect of path curvature on path jerk			DOUBLE	NEW CONF
-					
-	5	0., 0., 0., 0., 0.,0., 0., 0., 0., 0....	0.	1000.	1/1

Description: Allows the reaction of the path curvature on the path jerk to be taken into account on especially jerk-sensitive machines.
Entry for each dynamic G code group.

20605	PREPDYN_SMOOTHING_FACTOR			EXP, C05	B1
-	Factor for curve smoothing			DOUBLE	NEW CONF
-					
-	5	1., 1., 1., 1., 1.,1., 1., 1., 1., 1....	-	-	1/1

Description: Factor to determine the degree of smoothing and torsion.
A larger value of this MD causes a stronger smoothing and thus a more homogenous curvature/torsion and resulting path velocity.
With this factor being zero no smoothing is performed.
There is an entry for all dynamic G code groups.

20606	PREPDYN_SMOOTHING_ON			EXP, C05	B1
-	Activation of curve smoothing			BOOLEAN	NEW CONF
-					
-	5	0, 0, 0, 0, 0,0, 0, 0, 0, 0...	-	-	7/7

Description: Switch on of curve and torsion smoothing.
Smoothing of the curve or torsion causes a homogenous path velocity.
Smoothing is only performed, when the relevant factor is MD 20605 $MC_PREPDYN_SMOOTHING_FACTOR > 0.
There is an entry for all dynamic G code groups.

20607	PREPDYN_MAX_FILT_LENGTH_GEO			EXP, C05	B1
mm, degrees	Maximum filter length for geometry axes			DOUBLE	NEW CONF
-					
-	5	2., 2., 2., 2., 2.,2., 2., 2., 2., 2....	-	-	1/1

Description: Maximum filter length for curve and torsion smoothing of the geometry axes.
There is an entry for all dynamic G code groups.

20608	PREPDYN_MAX_FILT_LENGTH_RD			EXP, C05	B1
mm, degrees	Maximum filter length for rotary axes			DOUBLE	NEW CONF
-					
-	5	5., 5., 5., 5., 5.,5., 5., 5., 5., 5....	-	-	1/1

Description: Maximum filter length for curve and torsion smoothing of the rotary axes.
There is an entry for all dynamic G code groups.

20610	ADD_MOVE_ACCEL_RESERVE			C05	F2,B2,K1
-	Acceleration margin for overlaid movements			DOUBLE	PowerOn
-					
802d-cu3	-	.2,.2,.2,.2,.2,.2,.2,.2, .2,.2,.2,.2...	0.	0.9	2/2
802d-ng2	-	.2,.2,.2,.2,.2,.2,.2,.2, .2,.2,.2,.2...	0.	0.9	2/2
802d-ng3	-	.2,.2,.2,.2,.2,.2,.2,.2, .2,.2,.2,.2...	0.	0.9	2/2
802d-tm1	-	.2,.2,.2,.2,.2,.2,.2,.2, .2,.2,.2,.2...	0.	0.9	0/0
802d-tm2	-	.2,.2,.2,.2,.2,.2,.2,.2, .2,.2,.2,.2...	0.	0.9	0/0
802d-tm3	-	.2,.2,.2,.2,.2,.2,.2,.2, .2,.2,.2,.2...	0.	0.9	0/0

Description: This machine data contains the factor which defines the acceleration margin which is not used by a path movement in order to provide sufficient acceleration reserves for an overlaid movement for the velocity control.
A factor of 0.2 means that the path axes utilize 80% of the path acceleration in normal operation. Only when a request for overlaid movement is made, can 100% of the path acceleration be utilized.
MD irrelevant for:
Error states that lead to a rapid stop. In addition, the limitation is also ineffective for positioning axes.
Special cases:
At the moment the machine data is only taken into account if the function "Fast retraction" is first activated.
Related to:
MD32300 $MA_MAX_AX_ACCEL (axis acceleration)

20620	HANDWH_GEOAX_MAX_INCR_SIZE			C08, C06	H1
mm	Limitation handwheel increment for geometry axes			DOUBLE	PowerOn
-					
-	-	0.0,0.0,0.0,0.0,0.0,0.0, 0.0,0.0,0.0...	-	-	1/1

Description: > 0: Limitation of the size of the selected increment for geometry axes
$MN_JOG_INCR_SIZE0[<increment/VDI signal>] or
SD41010 $SN_JOG_VAR_INCR_SIZE for geometry axes
0: No limitation on geometry axes

20622	HANDWH_GEOAX_MAX_INCR_VSIZE			C08, C06, C05	-
mm/min	Path velocity override			DOUBLE	PowerOn
-					
802d-cu3	-	500.,500.,500.,500.,500.,500.,500....	-	-	1/1
802d-ng2	-	500.,500.,500.,500.,500.,500.,500....	-	-	0/0
802d-ng3	-	500.,500.,500.,500.,500.,500.,500....	-	-	1/1
802d-tm1	-	500.,500.,500.,500.,500.,500.,500....	-	-	0/0
802d-tm2	-	500.,500.,500.,500.,500.,500.,500....	-	-	0/0
802d-tm3	-	500.,500.,500.,500.,500.,500.,500....	-	-	1/1

Description: The following applies to the velocity override of the path:
> 0: Limitation of the size of the selected increment
($MN_JOG_INCR_SIZE_[<increment/VDI signal>] or
SD41010 $SN_JOG_VAR_INCR_SIZE) / 1000*IPO sampling time
= 0: No limitation

20624	HANDWH_CHAN_STOP_COND			EXP, C09	H1,P1
-	Definition of response of handwheel travel, channel-specific			DWORD	PowerOn
-					
802d-cu3	-	0x13FF,0x13FF,0x13FF,0x13FF,0x13FF,0x13FF...	0	0xFFFF	2/2
802d-ng2	-	0x13FF,0x13FF,0x13FF,0x13FF,0x13FF,0x13FF...	0	0xFFFF	1/1
802d-ng3	-	0x13FF,0x13FF,0x13FF,0x13FF,0x13FF,0x13FF...	0	0xFFFF	2/2
802d-tm1	-	0x13FF,0x13FF,0x13FF,0x13FF,0x13FF,0x13FF...	0	0xFFFF	0/0
802d-tm2	-	0x13FF,0x13FF,0x13FF,0x13FF,0x13FF,0x13FF...	0	0xFFFF	0/0
802d-tm3	-	0x13FF,0x13FF,0x13FF,0x13FF,0x13FF,0x13FF...	0	0xFFFF	0/0

Description: Definition of the behavior for handwheel travel to channel-specific VDI interface signals (bit 0 to bit 7) or the context-sensitive interpolator stop (bit 7):
Bit = 0:
Interruption or collection of the displacements entered via the handwheel.
Bit = 1:
Traversing aborted and no collecting
Bit assignment:
Bit 0: Mode group stop
Bit 1: Mode group stop, axes plus spindle
Bit 2: NC stop
Bit 3: NC stop, axes plus spindles
Bit 4: Feed disable
Bit 5: Feedrate override

Bit 6: Rapid traverse override
Bit 7: Feed stop, geometry axis or context-sensitive interpolator stop
Bit 8 = 0:
The maximum feedrate for handwheel travel of geometry axes is that specified in machine data JOG_AX_VELO for the corresponding machine axis/axes.
Bit 8 == 1:
The maximum feedrate for handwheel travel of geometry axes is that specified in machine data MAX_AX_VELO for the corresponding machine axis/axes.
Bit 9 = 0:
The override is active during handwheel travel of geometry axes
Bit 9 = 1:
During handwheel travel of geometry axes, the override is assumed to be 100% irrespective of the position of the override switch.
Exception: override 0, which is always active.
Bit 10 = 0:
MD11310 $MN_HANDWH_REVERSE is not active for DRF, i.e. handwheel travel with DRF is carried out as if MD11310 $MN_HANDWH_REVERSE = 0.
Bit 10 = 1:
MD11310 $MN_HANDWH_REVERSE is active for DRF.
Bit 11 = 0:
When the contour handwheel is deselected, program processing is continued automatically.
Bit 11 = 1:
When the contour handwheel is deselected, an NCSTOP is triggered automatically. Program processing is not continued until NCSTART is entered.
Bit 12 = 0
NC start has no effect on handwheel travel.
Bit 12 = 1:
The previously collected paths are rejected at NC start.
Bit 13 = 0:
For DRF, bits 0 - 3 and bit 12: bit = 0 / bit = 1 are active (see above).
Bit 13 = 1:
For DRF, bits 0 - 3 and bit 12 are NOT active: the DRF motion is not interrupted by a stop, and a DRF motion can take place even in "Automatic interrupted" state (achieved by NC Stop).
Note:
If an alarm leads to an axis stop and if such an alarm is pending, no DRF motion can take place.
Bit 14 = 0:
The maximum feedrate for handwheel travel of geometry axes is that specified in SD41120 $SN_JOG_REV_SET_VELO or in MD32050 $MA_JOG_REV_VELO (for revolutional feedrate) or in MD32040 $MA_JOG_REV_VELO_RAPID (for rapid traverse) for the corresponding machine axis, the spindle or rotary axis feedrate is included in the calculation.
Bit 14 = 1:
The maximum rotational feedrate for handwheel travel of geometry axes is the feedrate specified in MD32000 $MA_MAX_AX_VELO for the corresponding machine axis (see also bit 6).
Bit 15 = 0:
If an axis with active diameter programming is traversed in the channel, only half the distance of the specified increment is traveled during handwheel travel ($MN_HANDWH_TRUE_DISTANCE = 1 or 3).

Bit 15 = 1:
If an axis with active diameter programming is traversed in the channel, the specified increment is fully traveled during handwheel travel ($MN_HANDWH_TRUE_DISTANCE = 1 or 3).

20700	REFP_NC_START_LOCK			C01, C03	D1,R1,Z1
-	NC start disable without reference point			BOOLEAN	Reset
-					
-	-	TRUE,TRUE,TRUE,TRUE,TRUE,TRUE,TRUE...	-	-	2/2

Description:

0: The NC/PLC interface signal V3200 0007.1 (NC Start) for starting of part programs or part program blocks (MDI and overstore) is active even if one or all axes of the channel has/have not yet been referenced.
To ensure that the axes nevertheless reach the correct position after NC Start, the workpiece coordinate system (WCS) must be set to the correct value by means of other methods (scratch method, automatic zero offset determination etc.).

1: Those axes, for which the axial MD34110 $MA_REFP_CYCLE_NR specifies that a reference point is obligate (value > -1), must have been referenced before NC Start is allowed.

20730	G0_LINEAR_MODE			C09	P2
-	G0 interpolation mode			BOOLEAN	PowerOn
-					
-	-	TRUE,TRUE,TRUE,TRUE,TRUE,TRUE,TRUE...	-	-	2/2

Description:

This machine data defines the interpolation behavior of G0:
0: Non-linear interpolation (RTLIOF): Each path axis interpolates as an individual axis (positioning axis), independently of the other axes, at the rapid traverse velocity of the axis (MD32000 $MA_MAX_AX_VELO).
1: Linear interpolation (RTLION): The path axes are interpolated jointly.
Related to:
MD20732 $MC_EXTERN_G0_LINEAR_MODE

20732	EXTERN_G0_LINEAR_MODE			N12	P2
-	G00 interpolation mode			BOOLEAN	PowerOn
-					
802d-cu3	-	TRUE,TRUE,TRUE,TRUE,TRUE,TRUE,TRUE...	-	-	2/2
802d-ng2	-	TRUE,TRUE,TRUE,TRUE,TRUE,TRUE,TRUE...	-	-	-1/2
802d-ng3	-	TRUE,TRUE,TRUE,TRUE,TRUE,TRUE,TRUE...	-	-	-1/2
802d-tm1	-	TRUE,TRUE,TRUE,TRUE,TRUE,TRUE,TRUE...	-	-	2/2
802d-tm2	-	TRUE,TRUE,TRUE,TRUE,TRUE,TRUE,TRUE...	-	-	2/2
802d-tm3	-	TRUE,TRUE,TRUE,TRUE,TRUE,TRUE,TRUE...	-	-	2/2

Description: This machine data defines the interpolation behavior of G00:
0: Axes are traversed as positioning axes
1: Axes interpolate with each other
Related to:
MD10886 $MN_EXTERN_INCREMENT_SYSTEM

20734	EXTERN_FUNCTION_MASK			N12	-
-	Function mask for external language			DWORD	Reset
-					
802d-cu3	-	0,0,0,0,0,0,0,0,0,0,0,0,0,0,0,0	0	0xFFFF	2/2
802d-ng2	-	0,0,0,0,0,0,0,0,0,0,0,0,0,0,0,0	0	0xFFFF	-1/2
802d-ng3	-	0,0,0,0,0,0,0,0,0,0,0,0,0,0,0,0	0	0xFFFF	-1/2
802d-tm1	-	0,0,0,0,0,0,0,0,0,0,0,0,0,0,0,0	0	0xFFFF	2/2
802d-tm2	-	0,0,0,0,0,0,0,0,0,0,0,0,0,0,0,0	0	0xFFFF	2/2
802d-tm3	-	0,0,0,0,0,0,0,0,0,0,0,0,0,0,0,0	0	0xFFFF	2/2

Description: This machine data is used to influence functions in ISO mode.
Bit0: 0:
ISO mode T: "A" and "C" are interpreted as axes. If contour definition has been programmed, "A" or "C" must be preceded by a comma.
1:
"A" and "C" in the part program are always interpreted as a contour definition. An axis "A" or "C" is not allowed.

```
Bit1: 0:
   ISO mode T: G10 P < 100 tool geometry
                   P > 100 tool wear
      1:
               G10 P < 10000 tool geometry
                   P > 10000 tool wear
Bit2: 0:
   G04 dwell time: always [s] or [ms]
      1:
   If G95 is active, in spindle revolutions
Bit3: 0:
   Errors in ISO scanner lead to an alarm
      1:
   Errors in ISO scannner are not output, the block is transferred to the
   Siemens translator.
Bit4: 0:
   G00 is traversed with the current exact stop - continuous-path mode G code
      1:
   G00 is always traversed with G09
Bit5: 0:
   Modulo rotary axis is positioned at the shortest possible distance
      1:
   Direction of rotation of modulo rotary axis depends on sign
Bit6: 0:
   Only 4-digit program number allowed.
      1:
   8-digit program number allowed. If the program number has less than 4 dig-
   its, it is expanded to 4 digits with 0.
Bit7: 0:
   Axis programming for geometry axis exchange/parallel axes is compatible
   with ISO mode.
      1:
   Axis programming for geometry axis exchange/parallel axes in ISO mode is
   compatible with Siemens mode.
Bit8: 0:
   With cycles, the F value transferred is always interpreted as a feedrate.
      1:
   With threading cycles, the F value transferred is interpreted as a pitch.
Bit9: 0:
   Multiplication with 0.01mm / 0.0001inch is carried out in ISO mode T for
   G84, G88 and in standard mode F for G95.
      1:
   Multiplication with 0.001mm / 0.00001inch is carried out in ISO mode T for
   G84, G88 and in standard mode F for G95.
Bit10: 0:
   With M96 Pxx, the program programmed with Pxx is always called in the case
   of an interrupt
       1:
   With M96 Pxx, CYCLE396.spf is always called in the case of an interrupt
```

Bit11: 0:
With G54 Pxx, only G54.1 is displayed
1:
With G54 Pxx, the programmed program is displayed after the point, e.g. G54.48
Bit12: 0:
When the subroutine defined with M96 Pxx is called, $P_ISO_STACK is not modified
1:
When the subroutine defined with M96 Pxx is called, $P_ISO_STACK is incremented
Bit13: 0:
G10 is executed without internal STOPRE
1:
G10 is executed with internal STOPRE
Bit14: 0:
ISO_mode T: No alarm if a cutting edge has been programmed in the T command.
1:
ISO mode T: Alarm 14185 if a cutting edge has not been programmed in the T command.

20750	ALLOW_G0_IN_G96			C09, C05	P2,V1
-	G0 logic with G96, G961			BOOLEAN	PowerOn
-					
-	-	TRUE,TRUE,TRUE,TRUE,TRUE,TRUE,TRUE...	-	-	1/1

Description: This machine data defines the speed regulation characteristic of the spindle in G0 blocks with constant cutting rate (G96, G961) selected .
1: In a G0 block, the spindle speed is kept constant at the last value of the previous block that was unequal G0.
Prior to a subsequent block that does not contain G0, the spindle speed is increased to a value that belongs to the transverse axis position of the subsequent block.
0: In a G0 block, the spindle speed changes against the transverse axis position.

20800	SPF_END_TO_VDI			C04, C03	H2,K1
-	End of subroutine to PLC			BYTE	PowerOn
-					
-	-	1,1,1,1,1,1,1,1,1,1,1,1,1,1,1,1	-	-	1/1

Description: Bit 0 = 1:
The M functions for subroutine end (M17 and/or M2/M30) are transferred to the PLC interface.
Bit 0 = 0:
The M functions for subroutine end (M17 and/or M2/M30) are not transferred to the PLC interface.

Note:

To prevent stopping in continuous-path mode, M17 must not be programmed alone in a block.

Example of a subroutine: G64 F2000 G91 Y10 X10
X10 Z10 M17

Bit 1 = 0:

M01:

conditional program stop is always output to PLC, irrespective of whether the M01 signal is active or not.

Fast auxiliary function output M=QU(1) is inactive because M01 is assigned to the 1st M function group and thus is always output at block end.

Bit 1 = 1:

M01:

conditional program stop is only output to PLC, if M01 is also active.

This thus enables optimal run-time processing of the part program.

With fast auxiliary function output M=QU(1), M1 is output during the movement; thus it is possible to traverse blocks in continuous-path mode with programmed M01 as long as M01 is not active.

The request of the M01 signal with M=QU(1) no longer occurs at block end but during the movement.

20850	SPOS_TO_VDI			C04, C03	S1
-	Output of M19 to PLC on SPOS/SPOSA			BYTE	PowerOn
-					
-	-	0,0,0,0,0,0,0,0,0,0,0,0,0,0,0,0	-	-	1/1

Description:

Bit 0 = 0:

When bit 19 is also set to '0' in MD35035 $MA_SPIND_FUNCTION_MASK, auxiliary function M19 is not generated with SPOS and SPOSA. This also eliminates the acknowledgement time for the auxiliary function, which can cause faults wiith very short blocks.

Bit 0 = 1:

When SPOS and SPOSA are programmed in the part program, auxiliary function M19 is generated and output to the PLC. The address extension corresponds to the spindle number.

Related to:

SPIND_FUNCTION_MASK

20900	CTAB_ENABLE_NO_LEADMOTION			EXP	M3
-	Curve tables with jump of slave axis			BYTE	Reset
-					
-	-	0,0,0,0,0,0,0,0,0,0,0,0,0,0,0,0	0	2	0/0

Description:

This MD is used to configure the way jumps of the slave axis are processed in curve tables. A jump of the slave axis results from the presence of a movement of the slave axis in a segment of the curve table with no corresponding movement of the master axis.

The jumps of the slave axis may be programmed directly, or they are created internally in the control.

These segments may be created especially if a curve table with active tool radius compensation is generated.

The following configurations are possible:
0: No curve tables are created that contain a jump of the slave axis. If a jump of the slave axis occurs, alarm 10949 (CTAB_NO_LEADMOTION) is issued and program processing is terminated. This setting is compatible with previous software versions.
1: Curve tables containing a jump of the slave axis may be implemented. If a jump of the slave axis occurs, alarm 10955 (CTAB_NO_LEADMOTIONWARNING) is issued without terminating program processing.
2: Curve tables with jumps of the slave axis are implemented without issuing an alarm or a note.

20905	CTAB_DEFAULT_MEMORY_TYPE			EXP	M3
-	Default memory type for curve tables			BYTE	Reset
-					
-	-	0,0,0,0,0,0,0,0,0,0,0,0,0,0,0,0	0	1	0/0

Description: This machine data defines the memory (SRAM or DRAM) in which the curve tables are created by default.
This MD is only relevant if no memory type was specified when defining a curve table using CTABDEF().
The following settings can be selected:
0: By default, curve tables are created in the SRAM.
1: By default, curve tables are created in the DRAM.

21000	CIRCLE_ERROR_CONST			C06	-
mm	Circle end point monitoring constant			DOUBLE	PowerOn
-					
-	-	0.01,0.01,0.01,0.01,0.01,0.01,0.01,0.01...	-	-	2/2

Description: This machine data is used to specify the permissible absolute circle error [mm].
When a circle is programmed, the radii from the programmed center point to the start and end points are usually not equal (the circle is "overdefined").
The maximum permissible difference between these two radii that is accepted without an alarm is defined by the larger value in the following data:

- MD21000 $MC_CIRCLE_ERROR_CONST
- Start radius multiplied by MD21010 $MC_CIRCLE_ERROR_FACTOR

This means that for small circles the tolerance is a fixed value (MD21000 $MC_CIRCLE_ERROR_CONST), and for large circles it is proportional to the start radius.
Related to:
MD21010 $MC_CIRCLE_ERROR_FACTOR
(circle end point monitoring factor)

21010	CIRCLE_ERROR_FACTOR			C06	-
-	Circle end point monitoring factor			DOUBLE	PowerOn
-					
-	-	0.001,0.001,0.001,0.001,0.001,0.001...	-	-	2/2

Description: Factor for permissible radius difference.
Defines the factor for large circles by which the starting radius and end radius may deviate from each other
(see also MD21000 $MC_CIRCLE_ERROR_CONST (circle end point monitoring constant).

21015	INVOLUTE_RADIUS_DELTA			C06	A2
mm	Involute end point monitoring			DOUBLE	PowerOn
-					
-	-	0.01,0.01,0.01,0.01,0.01,0.01,0.01...	-	-	1/1

Description: Permissible absolute difference of radius at involute interpolation [mm].
At involute interpolation, the radius of the basic circle determined by the end point may differ from the programmed radius.
This data is used to limit the permissible maximum difference between start radius and end radius.

21016	INVOLUTE_AUTO_ANGLE_LIMIT			C06	A2
-	Automatic angle limitation during involute interpolation			BOOLEAN	PowerOn
-					
-	-	FALSE,FALSE,FALSE,FALSE,FALSE,FALSE...	-	-	1/1

Description: If the angle of rotation is programmed for an involute (AR=angle), the maximum angle of rotation is limited in case the involute is travelling towards the basic circle (AR < 0). The maximum angle of rotation is reached when the involute touches the basic circle.
Normally, if an angle larger than the maximum angle is programmed, an alarm is issued and the NC program aborted.
If this MD is set to TRUE any angle is accepted without an alarm for programming. If required, this angle is limited automatically.

21020	WORKAREA_WITH_TOOL_RADIUS			C03, C06	A3
-	Consideration of tool radius for working area limitation			BOOLEAN	Reset
-					
-	-	FALSE,FALSE,FALSE,FALSE,FALSE,FALSE...	-	-	2/2

Description: This machine data indicates whether the tool radius is taken into account in the working area limitation.
0: It is checked whether the tool center lies within the working area limits.
1: The tool radius is taken into account when the working area limitation is checked. This means that the working area is reduced by the tool radius.

21090	MAX_LEAD_ANGLE			C08, C09	M1
degrees	Maximum value of permitted lead angle for orientation progr.			DOUBLE	NEW CONF
-					
-	-	80.,80.,80.,80.,80.,80.,80.,80.,80....	0.	80.	0/0

Description: Maximum permissible value of the lead angle in degrees.

21092	MAX_TILT_ANGLE			C08, C09	M1
degrees	Maximum value of permitted side angle for orientation progr.			DOUBLE	NEW CONF
-					
-	-	180.,180.,180.,180.,180.,180.,180....	-180.	180.	0/0

Description: Maximum permissible value of the tilt angle in degrees.

21100	ORIENTATION_IS_EULER			C01, C09	F2,TE4,M1
-	Angle definition for orientation programming			BOOLEAN	NEW CONF
-					
-	-	TRUE,TRUE,TRUE,TRUE,TRUE,TRUE,TRUE...	-	-	0/0

Description: This data is only active for MD21102 $MC_ORI_DEF_WITH_G_CODE = 0

MD = 0 (FALSE):

The values programmed with A2, B2, C2 during orientation programming are interpreted as an RPY angle (in degrees).

The orientation vector is produced by rotating a vector in direction Z first by C2 around the Z axis, then by B2 around the new Y axis and finally by A2 around the new X axis. In contrast to Euler angle programming, all three values influence the orientation vector in this case.

MD = 1 (TRUE):

The values programmed with A2, B2, C2 during orientation programming are interpreted as Euler angles (in degrees).

The orientation vector is produced by rotating a vector in direction Z first by A2 around the Z axis, then by B2 around the new X axis and finally by C2 around the new Z axis. This means that the value of C2 is meaningless.

21110	X_AXIS_IN_OLD_X_Z_PLANE			EXP, C01, C09	M1,K2
-	Coordinate system for automatic frame definition			BOOLEAN	PowerOn
-					
-	-	TRUE,TRUE,TRUE,TRUE,TRUE,TRUE,TRUE...	-	-	1/1

Description: 1 = With automatic definition of a frame (TOFRAME), the Z direction of which equals the current tool orientation, the new coordinate system is additionally rotated around the new Z axis so that the new X axis is in the old Z-X plane.

0 = With automatic definition of a frame (TOFRAME), the Z direction of which equals the current tool orientation, the new coordinate system is maintained as it results from the kinematics of the machine, i.e. it is assumed that the coordinate system is fixed to the tool and rotates with the tool (orientation).

From SW 5.3:

This machine data is only effective when the three lowest value decimal positions (units, tens, hundreds) of SD42980 $SC_TOFRAME_MODE) equal zero. Otherwise the frame definition is specified by SD42980 $SC_TOFRAME_MODE.

MD irrelevant for:
No orientation programming
Related to:
MD21100 $MC_ORIENTATION_IS_EULER
Further references:
/PG/, Programming Guide, Fundamentals

21160	JOG_VELO_RAPID_GEO			C07	F2
mm/min	JOG rapid traverse for geometry axes			DOUBLE	Reset
-					
802d-cu3	3	10000., 10000.0, 10000.,10000., 10000.0, 10000....	-	-	1/1
802d-ng2	3	10000., 10000.0, 10000.,10000., 10000.0, 10000....	-	-	0/0
802d-ng3	3	10000., 10000.0, 10000.,10000., 10000.0, 10000....	-	-	0/0
802d-tm1	3	10000., 10000.0, 10000.,10000., 10000.0, 10000....	-	-	0/0
802d-tm2	3	10000., 10000.0, 10000.,10000., 10000.0, 10000....	-	-	0/0
802d-tm3	3	10000., 10000.0, 10000.,10000., 10000.0, 10000....	-	-	0/0

Description: Velocity in JOG mode with rapid traverse override for geometry axes in the channel (mm/min)

21165	JOG_VELO_GEO			C07	F2
mm/min	Jog feedrate for geometry axes			DOUBLE	Reset
-					
802d-cu3	3	1000., 1000., 1000.,1000., 1000., 1000....	-	-	1/1
802d-ng2	3	1000., 1000., 1000.,1000., 1000., 1000....	-	-	0/0
802d-ng3	3	1000., 1000., 1000.,1000., 1000., 1000....	-	-	0/0
802d-tm1	3	1000., 1000., 1000.,1000., 1000., 1000....	-	-	0/0
802d-tm2	3	1000., 1000., 1000.,1000., 1000., 1000....	-	-	0/0
802d-tm3	3	1000., 1000., 1000.,1000., 1000., 1000....	-	-	0/0

Description: JOG velocity for geometry axes in the channel (mm/min)

21186	TOCARR_ROT_OFFSET_FROM_FR			C01, C07	F2
-	Offset of TOCARR rotary axes from WO			BOOLEAN	Immediately
-					
-	-	FALSE,FALSE,FALSE,FALSE,FALSE,FALSE...	-	-	0/0

Description: Rotary axes offset for the orientable tool holder is automatically accepted from the work offset activated on activation of the orientable tool holder for the rotary axes.

21198	ORI_TRAFO_ONLINE_CHECK_LIM			C07	F2
mm	Activation limit of the realtime dynamic monitoring			DOUBLE	NEW CONF
-					
-	-	1.0,1.0,1.0,1.0,1.0,1.0,1.0,1.0,1.0,1.0...	-	-	1/1

Description: The realtime dynamic limitation is activated if the effective tool length in an orientation transformation differs from the value taken into account in the preprocessing by more than the value defined in this machine data, for example as a result of overlaid motions or activation of the online tool length compensation.

21200	LIFTFAST_DIST			C09	K1,V1,2.6,6.1
mm	Traversing distance on rapid lift from contour			DOUBLE	PowerOn
-					
-	-	0.1,0.1,0.1,0.1,0.1,0.1,0.1,0.1,0.1,0.1...	-	-	1/1

Description: The machine data determines the absolute value of the traverse movement for rapid lift. The direction of the traverse movement is defined in the part program by the command ALF.
References:
/PA/, Programming Guide: Fundamentals

21202	LIFTFAST_WITH_MIRROR			C09	K1
-	Rapid retract with mirrorring			BOOLEAN	PowerOn
-					
-	-	FALSE,FALSE,FALSE,FALSE,FALSE,FALSE...	-	-	1/1

Description: 1: When determining the retraction direction, if mirroring of the contour is active then the retraction direction is also mirrored. Mirroring of the retraction direction only refers to the directional components vertical to the tool direction.
0: Mirroring of the contour is NOT taken into account when determining the retraction direction.

21204	LIFTFAST_STOP_COND			C09	M3
-	Stop behavior with fast retraction			DWORD	NEW CONF
-					
-	-	0,0,0,0,0,0,0,0,0,0,0,0,0,0,0,0	-	-	1/1

Description: Specifies the stop behavior of the liftfast motion under different stop conditions
Bit0:Axial NC/PLC interface signal V380x 0004.3 (Axial feed stop / Spindle stop) or context-sensitive interpolator stop
=0 Stop of the retraction motion in case of an axial feed stop or context-sensitive interpolator stop
=1 No stop of the retraction motion in case of an axial feed stop or context-sensitive interpolator stop
Bit1:Feed disable in channel NC/PLC interface signal V3200 0006.0 (Feed stop)
=0 Stop of the retraction motion in case of the feed stop in the channel
=1 No stop of the retraction motion in case of the feed stop in the channel

21210	SETINT_ASSIGN_FASTIN			C01, C09	-
-	HW assignment of ext. NCK input byte for NC progr. interrupts			DWORD	PowerOn
-					
-	-	1,1,1,1,1,1,1,1,1,1,1,1,1,1,1,1	-	-	1/1

Description: HW assignment of the fast input byte for NC program interrupts
Bit 0 to 7:
Number of input used
Bit 16 to 23:
Mask of signals that the channel is not to evaluate
Bit 24 to 31:
Mask of signals that are to be evaluated in inverted form
Bit set: Interrupt initiated by falling edge.
Possible inputs:
1:
On board-inputs of the 840D (4 fast + 4 bits via VDI default)
2 - 5:
External digital inputs (fast NCK I/Os or VDI default)
128 - 129:
Comparator byte (results from fast analog inputs or VDI default)

21380	ESR_DELAY_TIME1			EXP, N09	M3
s	Delay time ESR axes			DOUBLE	NEW CONF
-					
-	-	0.0,0.0,0.0,0.0,0.0,0.0,0.0,0.0,0.0,0.0...	-	-	1/1

Description: When, for example, an alarm occurs, this MD can be used to delay deceleration in order, for example, to enable a retraction from the tooth gap (ESR) in gear wheel machining.

21381	ESR_DELAY_TIME2			EXP, N09	M3
s	ESR time for IPO controlled braking			DOUBLE	NEW CONF
-					
-	-	0.0,0.0,0.0,0.0,0.0,0.0, 0.0,0.0,0.0...	-	-	1/1

Description: When time MD21380 $MC_ESR_DELAY_TIME1 has expired, the time (MD21381 $MC_ESR_DELAY_TIME2) specified for interpolatory braking is still available. When time MD21381 $MC_ESR_DELAY_TIME2 has expired, rapid deceleration with following tracking is initiated.

2.3.2 Machine data for grinding function

21500	TRACLG_GRINDSPI_VERT_OFFSET			C07	-
mm	Vertical position offset of grinding axis in centerless grinding			DOUBLE	PowerOn
-					
-	-	0.,0.,0.,0.,0.,0.,0.,0., 0.,0.,0.,0....	-	-	0/0

Description: The vertical offset of the grinding axis is specified in this MD.

21501	TRACLG_GRINDSPI_HOR_OFFSET			C07	-
mm	Horiz. position offset of grinding axis in centerless grinding			DOUBLE	PowerOn
-					
-	-	0.,0.,0.,0.,0.,0.,0.,0., 0.,0.,0.,0....	-	-	0/0

Description: Horizontal position offset of the grinding axis in centerless grinding. The setting in this MD is significant only when MD: TRAFO_AXES_IN_n[0] = 0, i.e. no axis is programmed for the grinding wheel.

21502	TRACLG_CTRLSPI_VERT_OFFSET			C07	-
mm	vert. position offset of regulating axis in centerless grinding			DOUBLE	PowerOn
-					
-	-	0.,0.,0.,0.,0.,0.,0.,0., 0.,0.,0.,0....	-	-	0/0

Description: The vertical offset for the regulating axis is specified in this MD.

21504	TRACLG_SUPPORT_VERT_OFFSET			C07	-
mm	Vertical offset of work blade in centerless grinding			DOUBLE	PowerOn
-					
-	-	0.,0.,0.,0.,0.,0.,0.,0., 0.,0.,0.,0....	-	-	0/0

Description: Y offset for work blade
Rule: X(0) = Y(offset) + Q1 <Y(direction vectorQ1) + Q2 < Y(direction vector Q2)

21506	TRACLG_SUPPORT_HOR_OFFSET			C07	S8
mm	Horizontal offset of work blade in centerless grinding			DOUBLE	PowerOn
-					
-	-	0.,0.,0.,

21518	TRACLG_CONTACT_UPPER_LIMIT			C07	-
mm	Upper contact limit of work blade with work in centerl. grinding			DOUBLE	PowerOn
-					
-	-	0.,0.,0.,0.,0.,0.,0.,0.,0., 0.,0.,0.,0....	-	-	0/0

Description: It is necessary to specify the upper contact limit of the blade with the part to be ground (d1) for the purpose of monitoring the support range limits.
Related to:
MD21520 $MC_TRACLG_CONTACT_LOWER_LIMIT

21520	TRACLG_CONTACT_LOWER_LIMIT			C07	-
mm	Lower contact limit of work blade with work in centerl. grinding			DOUBLE	PowerOn
-					
-	-	0.,0.,0.,0.,0.,0.,0.,0.,0., 0.,0.,0.,0....	-	-	0/0

Description: It is necessary to specify the lower contact limit of the blade with the part to be ground (d2) for the purpose of monitoring the support range limits.
Related to:
MD: TRACLG_CONTACT_UPPER_LIMIT

21522	TRACLG_GRINDSPI_NR			C07	-
-	Definition of grinding spindle for centerless grinding			BYTE	PowerOn
-					
-	-	2,2,2,2,2,2,2,2,2,2,2,2,2,2,2	1	20	0/0

Description: The number of the grinding spindle is specified in this MD.

21524	TRACLG_CTRLSPI_NR			C07	-
-	Definition of regulating spindle for centerless grinding			BYTE	PowerOn
-					
-	-	1,1,1,1,1,1,1,1,1,1,1,1,1,1,1	1	20	0/0

Description: The number of the regulating spindle is specified in this MD.

21526	TRACLG_G0_IS_SPECIAL			C07	-
-	Special logic for G0 in centerless grinding			BOOLEAN	PowerOn
-					
-	-	TRUE,TRUE,TRUE,TRUE,TRUE,TRUE,TRUE...	-	-	0/0

Description: This MD can be used to define how the speed of the regulating wheel must respond in the case of transitions from motion blocks with G0 and without G0 (see table).
TRACLG_G0_IS_SPECIAL = 1:
On transition from a motion block with G0 to one without G0, the speed of the regulating wheel is increased during the G0 block to the desired initial speed in the block without G0.
TRACLG_G0_IS_SPECIAL = 0:
The speed of the regulating wheel is controlled only for motion blocks without G0 (the transitions from a motion block with G0 to one without G0 are not taken into account).

2.3.3 Channel auxiliary function settings

22000	AUXFU_ASSIGN_GROUP			C04	H2,S1
-	Auxiliary function group			BYTE	PowerOn
-					
-	64	1, 1, 1, 1, 1, 1, 1, 1, 1, 1, 1, 1, 1, 1, 1, 1, 1, 1, 1, 1,1, 1...	1	127	2/2

Description: See MD22010 $MC_AUXFU_ASSIGN_TYPE [n] (auxiliary function type)

22010	AUXFU_ASSIGN_TYPE			C04	H2,S1
-	Auxiliary function type			STRING	PowerOn
-					
-	64	"", "", "",

MD22030 $MC_AUXFU_ASSIGN_VALUE[0] = 100
MD22040 $MC_AUXFU_ASSIGN_GROUP[0] = 5 ; (5th group)
M00, M01, M02, M17 and M30 are assigned to group 1 as default.
M3, M4, M5 and M70 of the master spindle are assigned to group 2 as default.
The S functions of the master spindle are assigned to group 3 as default.
The four machine data for assigning an auxiliary function to an auxiliary function group must always be given the same index [n].
Special cases:

If the value of an auxiliary function is less than 0, all auxiliary functions of this type and extension are assigned to one group.

Example:

S2 = -1 => group 9
(all S values of the 2nd spindle are assigned to group 9)

Related to:

MD11100 $MN_AUXFU_MAXNUM_GROUP_ASSIGN

22020	AUXFU_ASSIGN_EXTENSION			C04	H2,S1
-	Auxiliary function extension			DWORD	PowerOn
-					
-	64	0, 0, 0, 0, 0, 0, 0, 0, 0, 0, 0, 0, 0, 0, 0, 0, 0, 0, 0, 0, 0, 0, 0, 0, 0, 0, 0, 0, 0, 0, 0, 0...	-1	99	2/2

Description: See MD22010 $MC_AUXFU_ASSIGN_TYPE[n] (auxiliary function type)
Special cases:

With the spindle functions M3, M4, M5, M19, M70, M40, M41, M42, M43, M44, M45 and S,

the spindle number is output to the PLC in the auxiliary function extension.

22030	AUXFU_ASSIGN_VALUE			C04	H2,S1
-	Auxiliary function value			DWORD	PowerOn
-					
-	64	0, 0, 0, 0, 0, 0, 0, 0, 0, 0, 0, 0, 0, 0, 0, 0, 0, 0, 0, 0, 0, 0, 0, 0, 0, 0, 0, 0, 0, 0, 0, 0...	-	-	2/2

Description: If the value in this MD is smaller than 0, all help functions of this type and of this address expansion are assigned to this group.
(see MD22010 $MC_AUXFU_ASSIGN_TYPE[n] (help function type)

22035	AUXFU_ASSIGN_SPEC			C04	H2
-	Output specification			DWORD	PowerOn
-					
-	64	0, 0, 0, 0, 0, 0, 0, 0, 0, 0, 0, 0, 0, 0, 0, 0, 0, 0, 0, 0, 0, 0, 0, 0, 0, 0, 0, 0, 0, 0, 0, 0...	-	-	2/2

Description: Specification of the output behavior of the user-defined auxiliary functions.
Bit 0 = 1Acknowledgment "normal" after an OB1 cycle
Bit 1 = 1Acknowledgment "quick" with OB40
Bit 2 = 1No predefined auxiliary function
Bit 3 = 1No output to the PLC
Bit 4 = 1Spindle reaction after acknowledgment by the PLC

```
Bit 5 = 1Output before the motion
Bit 6 = 1Output during the motion
Bit 7 = 1Output at block end
Bit 8 = 1No output after block search types 1, 2, 4
Bit 9 = 1Collection during block search type 5 (SERUPRO)
Bit 10 = 1 No output during block search type 5 (SERUPRO)
Bit 11 = 1Cross-channel auxiliary function (SERUPRO)
Bit 12 = 1Output via synchronized action
Bit 13 = 1 Implicit auxiliary function
Bit 14 = 1 Active M01
Bit 15 = 1 No output during running-in test
Bit 16 = 1 Nibbling off
Bit 17 = 1 Nibbling on
Bit 18 = 1 Nibbling
```

22040	AUXFU_PREDEF_GROUP			C04	H2
-	Predefined auxiliary function groups			DWORD	PowerOn
-					
-	261	1, 1, 1, 1, 1, 1, 2, 2, 2, 2, 2, 4, 4, 4, 4, 4, 4, 3, 1, 1, 1...	0	128	2/2

Description: Group assignment of predefined auxiliary functions.
The predefined groups cannot be changed for indices 0, 1, 2, 3, 4, 22, 23, 24.

22050	AUXFU_PREDEF_TYPE			C04	H2
-	Predefined auxiliary function type			STRING	PowerOn
-					
-	261	"M", "M", "M", "M", "M", "M", "M", "M", "M", "M","M", "M", "M"...	-	-	2/2

Description: The address codes of the predefined auxiliary functions are fix.
This setting cannot be changed!

22060	AUXFU_PREDEF_EXTENSION			C04	H2
-	Predefined auxiliary function extension			DWORD	PowerOn
-					
-	261	0, 0, 0, 0, 0, 0, 1, 1, 1, 1, 1, 1, 1, 1, 1, 1, 1, 1, 1, 0, 0, 0...	-1	99	2/2

Description: Address extension for predefined auxiliary functions:
This setting can be changed only for indices 5 to 17 and 21!

22070	AUXFU_PREDEF_VALUE			C04	H2
-	Predefined auxiliary function value			DWORD	PowerOn
-					
-	261	0, 1, 2, 17, 30, 6, 3, 4, 5, 19, 70, 40, 41, 42, 43, 44, 45, -1...	-	-	2/2

Description: Value of predefined auxiliary functions.
This setting cannot be changed!

22080	AUXFU_PREDEF_SPEC			C04	H2,K1
-	Output specification			DWORD	PowerOn
-					
-	261	0x81, 0x81, 0x81, 0x81, 0x81, 0x21, 0x21, 0x21, 0x21, 0x21...	-	-	1/1

Description: Specification of the output behavior of the predefined auxiliary functions.
Bit 0 = 1Acknowledgment "normal" after an OB1 cycle
Bit 1 = 1Acknowledgment "quick" with OB40
Bit 2 = 1No predefined auxiliary function
Bit 3 = 1No output to the PLC
Bit 4 = 1Spindle reaction after acknowledgment by the PLC
Bit 5 = 1Output before the motion
Bit 6 = 1Output during the motion
Bit 7 = 1Output at block end
Bit 8 = 1No output after block search types 1, 2, 4
Bit 9 = 1 Collection during block search type 5 (SERUPRO)
Bit 10 = 1No output during block search type 5 (SERUPRO)
Bit 11 = 1Cross-channel auxiliary function (SERUPRO)
Bit 12 = 1Output via synchronized action
Bit 13 = 1 Implicit auxiliary function
Bit 14 = 1 Active M01
Bit 15 = 1 No output during running-in test
Bit 16 = 1 Nibbling off
Bit 17 = 1 Nibbling on
Bit 18 = 1 Nibbling

22100	AUXFU_QUICK_BLOCKCHANGE			C04	H2
-	Block change delay with quick auxiliary functions.			DWORD	PowerOn
-					
802d-cu3	-	0,0,0,0,0,0,0,0,0,0,0,0,0,0,0,0	0	1	1/1
802d-ng2	-	0,0,0,0,0,0,0,0,0,0,0,0,0,0,0,0	0	1	0/0
802d-ng3	-	0,0,0,0,0,0,0,0,0,0,0,0,0,0,0,0	0	1	1/1
802d-tm1	-	0,0,0,0,0,0,0,0,0,0,0,0,0,0,0,0	0	1	0/0
802d-tm2	-	0,0,0,0,0,0,0,0,0,0,0,0,0,0,0,0	0	1	0/0
802d-tm3	-	0,0,0,0,0,0,0,0,0,0,0,0,0,0,0,0	0	1	0/0

Description: Block change is not delayed with quick auxiliary functions.
0: With the quick auxiliary function output the block change is delayed until acknowledgement by the PLC (OB40).
1: With the quick auxiliary function output to the PLC the block change is not delayed.
MD irrelevant for:
Auxiliary functions with normal acknowledgement
References:
/FBSY/, Synchronized Actions

22110	AUXFU_H_TYPE_INT			C11, C04	H2,K1
-	Data format of H auxiliary functions (integer/real)			DWORD	PowerOn
-					
-	-	0,0,0,0,0,0,0,0,0,0,0,0,0,0,0,0	0	1	0/0

Description: 0: The values of H auxiliary functions are present in floating point format.
The maximum value range is +/-3.4028 ex 38.
1: The value of H auxiliary functions is rounded and changed to an integer.
The basic program in the PLC must interpret the value as an integer.
The maximum value range is -2147483648 to 2147483647.

22200	AUXFU_M_SYNC_TYPE			C04	H2,K1,2.4
-	Output time of M functions			BYTE	PowerOn
-					
-	-	1	0	3	0/0

Description: Synchronization of the M auxiliary functions with regard to a simultaneously programmed axis motion.
0 = Output before motion
1 = Output during motion
2 = Output at block end
3 = No output to the PLC (therefore no block change delay)
Notice:
An auxiliary function output specification configured by MD22080 $MC_AUXFU_PREDEF_SPEC[preIndex], MD22035 $MC_AUXFU_ASSIGN_SPEC[auxIndex] or
A group output specification configured by MD11110 $MN_AUXFU_GROUP_SPEC[groupIndex], which has a higher priority.

22210	AUXFU_S_SYNC_TYPE			C04	H2,2.4
-	Output time of S functions (see MD22200 for values)			BYTE	PowerOn
-					
-	-	1	0	4	0/0

Description: Synchronization of the S auxiliary functions with regard to a simultaneously programmed axis motion.
0 = Output before motion
1 = Output during motion
2 = Output at block end
3 = No output to the PLC (therefore no block change delay)
4 = Output in accordance with the predefined output specification
Notice:
An auxiliary function output specification configured by MD22080 $MC_AUXFU_PREDEF_SPEC[preIndex], MD22035 $MC_AUXFU_ASSIGN_SPEC[auxIndex] or
A group output specification configured by MD11110 $MN_AUXFU_GROUP_SPEC[groupIndex], which has a higher priority.

22220	AUXFU_T_SYNC_TYPE			C11, C04	H2,2.4
-	Output time for T functions (see MD22200 for values)			BYTE	PowerOn
-					
-	-	1	0	4	0/0

Description: Synchronization of the T auxiliary functions with regard to a simultaneously programmed axis motion.
0 = Output before motion
1 = Output during motion
2 = Output at block end
3 = No output to the PLC (therefore no block change delay)
4 = Output in accordance with the predefined output specification
Notice:
An auxiliary function output specification configured by MD22080 $MC_AUXFU_PREDEF_SPEC[preIndex], MD22035 $MC_AUXFU_ASSIGN_SPEC[auxIndex] or
A group output specification configured by MD11110 $MN_AUXFU_GROUP_SPEC[groupIndex], which has a higher priority.

22250	AUXFU_D_SYNC_TYPE			C04	H2
-	Output time for D functions (see MD22200 for values)			BYTE	PowerOn
-					
-	-	1	0	4	0/0

Description: Synchronization of the D auxiliary functions with regard to a simultaneously programmed axis motion.
0 = Output before motion
1 = Output during motion
2 = Output at block end
3 = No output to the PLC (therefore no block change delay)
4 = Output in accordance with the predefined output specification
Notice:
An auxiliary function output specification configured by MD22080 $MC_AUXFU_PREDEF_SPEC[preIndex], MD22035 $MC_AUXFU_ASSIGN_SPEC[auxIndex] or
A group output specification configured by MD11110 $MN_AUXFU_GROUP_SPEC[groupIndex], which has a higher priority.

22252	AUXFU_DL_SYNC_TYPE			C04	H2
-	Output time of DL functions			BYTE	PowerOn
-					
-	-	1	0	4	0/0

Description: Synchronization of the auxiliary function with regard to a simultaneously programmed motion.
0 = Output before motion
1 = Output during motion
2 = Output at block end
3 = No output to the PLC (therefore no block change delay)
4 = Output in accordance with the predefined output specification

Notice:
An auxiliary function output specification configured by MD22080 $MC_AUXFU_PREDEF_SPEC[preIndex], MD22035 $MC_AUXFU_ASSIGN_SPEC[auxIndex] or
A group output specification configured by MD11110 $MN_AUXFU_GROUP_SPEC[groupIndex], which has a higher priority.

22254	AUXFU_ASSOC_M0_VALUE			C01, C03, C10	H2,K1
-	Additional M function to stop a program			DWORD	PowerOn
-					
-	-	-1,-1,-1,-1,-1,-1,-1,-1,-1,-1,-1,-1,-1...	-	-	2/2

Description: This machine data defines an additional, predefined M function, which behaves in the same way as M0. The value of the machine data corresponds to the number of the auxiliary M function.
Predefined M numbers, such as M0, M1, M2, M3, etc., are not allowed.
Restriction:
See MD10715 $MN_M_NO_FCT_CYCLE
Related to:
MD10714 $MN_M_NO_FCT_EOP,
MD10715 $MN_M_NO_FCT_CYCLE,
MD20094 $MC_SPIND_RIGID_TAPPING_M_NR,
MD22254 $MC_AUXFU_ASSOC_M0_VALUE
For external language mode:
MD10814 $MN_EXTERN_M_NO_MAC_CYCLE,
MD10804 $MN_EXTERN_M_NO_SET_INT
MD10806 $MN_EXTERN_M_NO_DISABLE_INT,
MD10800 $MN_EXTERN_CHAN_SYNC_M_NO_MIN,
MD10802 $MN_EXTERN_CHAN_SYNC_M_NO_MAX
MD20095 $MC_EXTERN_RIGID_TAPPING_M_NR
For nibbling:
MD26008 $MC_NIBBLE_PUNCH_CODE

22256	AUXFU_ASSOC_M1_VALUE			C01, C03, C10	H2
-	Additional M function for conditional stop			DWORD	PowerOn
-					
-	-	-1,-1,-1,-1,-1,-1,-1,-1,-1,-1,-1,-1,-1...	-	-	2/2

Description: This machine data defines an additional, predefined M function, which behaves in the same way as M1. The value of the machine data corresponds to the number of the auxiliary M function.
Predefined M numbers, such as M0, M1, M2, M3, etc., are not allowed.
Restriction:
See MD10715 $MN_M_NO_FCT_CYCLE
Related to:
MD10714 $MN_M_NO_FCT_EOP,
MD10715 $MN_M_NO_FCT_CYCLE,
MD20094 $MC_SPIND_RIGID_TAPPING_M_NR,
MD22254 $MC_AUXFU_ASSOC_M0_VALUE

For external language mode:
MD10814 $MN_EXTERN_M_NO_MAC_CYCLE,
MD10804 $MN_EXTERN_M_NO_SET_INT
MD10806 $MN_EXTERN_M_NO_DISABLE_INT,
MD10800 $MN_EXTERN_CHAN_SYNC_M_NO_MIN,
MD10802 $MN_EXTERN_CHAN_SYNC_M_NO_MAX
MD20095 $MC_EXTERN_RIGID_TAPPING_M_NR
For nibbling:
MD26008 $MC_NIBBLE_PUNCH_CODE

22400	S_VALUES_ACTIVE_AFTER_RESET			C04, C03, C05	-
-	S function active beyond RESET			BOOLEAN	PowerOn
-					
-	-	FALSE,FALSE,FALSE,FALSE,FALSE,FALSE...	-	-	2/2

Description: 1: The last S values set in the main run are still active after a RESET.
0: The various S values are equal to 0 after a RESET and must therefore be reprogrammed.

22410	F_VALUES_ACTIVE_AFTER_RESET			C04, C03, C05	M3,V1
-	F function active beyond RESET			BOOLEAN	PowerOn
-					
-	-	FALSE,FALSE,FALSE,FALSE,FALSE,FALSE...	-	-	2/2

Description: 1: The last programmed F, FA, OVR and OVRA values are still active after RESET.
0: The various values are set to their default values after reset.
Related to:
MD22240 $MC_AUXFU_F_SYNC_TYPE Output time of the F functions

22420	FGROUP_DEFAULT_AXES			C11	-
-	Default setting for FGROUP command			BYTE	PowerOn
-					
-	8	0, 0, 0, 0, 0, 0, 0, 0,0, 0, 0, 0, 0, 0, 0, 0...	-	-	0/0

Description: Default setting for FGROUP command. You can specify up to 8 channel axes whose resulting velocity is equivalent to the programmed path feed.
If all eight values are zero (default), the geo axis entered in MD20050 $MC_AXCONF_GEOAX_ASSIGN_TAB are active as the default setting for the FGROUP command as previously.

22510	GCODE_GROUPS_TO_PLC			C04	K1,P3 pl,P3 sl
-	G codes output at NCK-PLC interface on block change/ RESET			BYTE	PowerOn
-					
-	8	2, 0, 0, 0, 0, 0, 0, 0	-	-	1/1

Description: Specification of the G code group, the G codes of which are output to the NCK/PLC interface in case of block change/ reset.
The interface is updated after each block change and reset.

Notice:

It is not guaranteed that a PLC user program has at all times a block-synchronous relation between the active NC block and the G codes present.

Example: Path mode with very short blocks

22512	EXTERN_GCODE_GROUPS_TO_PLC			C11, C04	-
-	Send G codes of an external NC language to PLC			BYTE	PowerOn
-					
802d-cu3	8	18, 0, 0, 0, 0, 0, 0, 0	-	-	1/1
802d-ng2	8	0, 0, 0, 0, 0, 0, 0, 0,0, 0, 0, 0, 0, 0, 0, 0...	-	-	-1/1
802d-ng3	8	0, 0, 0, 0, 0, 0, 0, 0,0, 0, 0, 0, 0, 0, 0, 0...	-	-	-1/1
802d-tm1	8	18, 0, 0, 0, 0, 0, 0, 0	-	-	1/1
802d-tm2	8	18, 0, 0, 0, 0, 0, 0, 0	-	-	1/1
802d-tm3	8	18, 0, 0, 0, 0, 0, 0, 0	-	-	1/1

Description: Specification of the G code group of external languages, the G codes of which are output at the NCK interface on block change/reset.

The interface is updated at each block change and after RESET.

Notice:

It is not guaranteed that a PLC user program has at all times a block-synchronous relation between the active NC block and the G codes present.
(Example: Path mode with very short blocks).

22515	GCODE_GROUPS_TO_PLC_MODE			C04	-
-	Behavior of G group transfer to PLC			DWORD	PowerOn
-					
-	-	0,0,0,0,0,0,0,0,0,0,0,0,0,0,0,0	0	1	1/1

Description: For setting the behavior, i.e. how the G groups are to be interpreted in the PLC with regard to data.

With the current behavior (bit 0 = 0), the G group is the array index of a 64-byte field (DBB 208 - DBB 271).

Maximally the 64th G group can be reached in this way.

With the new behavior (bit 0 = 1), the data storage in the PLC consists of max. 8 bytes (DBB 208 - DBB 215).

With this procedure, the array index of this byte array is identical with the index of the MD22510 $MC_GCODE_GROUPS_TO_PLC[Index] and MD22512 $MC_EXTERN_GCODE_GROUPS_TO_PLC[Index].

Each index (0 - 7) may only be set for one of the two machine data; the value 0 must be entered for the other MD.

Bit 0(LSB) = 0:

Behavior as before, the 64-byte field is used for displaying the G codes

Bit 0(LSB) = 1:

The user specifies for which G groups the first 8 bytes are to be used

22530	TOCARR_CHANGE_M_CODE			C04	H2,W1
-	M code at change of tool holder			DWORD	PowerOn
-					
-	-	0,0,0,0,0,0,0,0,0,0,0,0,0,0,0,0	-99999999	99999999	0/0

Description: The absolute value of this machine data indicates the number of the M code, which is output at the VDI interface when a tool holder is activated.

- If the MD is positive, the unchanged M code is always output.
- If the MD is negative, the number of the tool holder is added to the absolute value of the machine data and the number is output.

Special cases:

N M code is output, if the number of the M code to be output or the absolute value of this MD is set to one of the values 0 to 6, 17 or 30. It is not monitored whether an M code created in this way will conflict with other functions.

References:

/FB/, H2, Auxiliary Function Output to PLC

22532	GEOAX_CHANGE_M_CODE			C04	H2,K2
-	M code at change of geo axes			DWORD	PowerOn
-					
-	-	0,0,0,0,0,0,0,0,0,0,0,0,0,0,0,0	0	99999999	0/0

Description: Number of the M code, which is output at the VDI interface in the case of a switchover of the geometry axes.
No M code is output if this MD is set to one of the values 0 to 6, 17 or 30.
It is not monitored whether an M code created in this way will conflict with other functions.

22534	TRAFO_CHANGE_M_CODE			C04	M1,H2
-	M code at change of transformation			DWORD	PowerOn
-					
-	-	0,0,0,0,0,0,0,0,0,0,0,0,0,0,0,0	0	99999999	2/2

Description: Number of the M code that is output at the VDI interface in the case of a transformation changeover of the geometry axes.
No M code is output if this MD is set to one of the values 0 to 6, 17 or 30.
It is not monitored whether an M code created in this way will conflict with other functions.

22550	TOOL_CHANGE_MODE			C01, C11, C04, C09	W3,K1,W1
-	New tool compensation for M function			BYTE	PowerOn
-					
-	-	0,0,0,0,0,0,0,0,0,0,0,0,0,0,0,0	0	1	2/2

Description: The T function is used to select a tool in the program. The setting in this machine data determines whether the new tool is loaded immediately on execution of the T function:
MD22550 $MC_TOOL_CHANGE_MODE = 0

The new tool is loaded directly with the programming of T or D. This setting is mainly used on lathes. If a D is not programmed in the block by T, then the tool offset defined in MD20270 $MC_CUTTING_EDGE_DEFAULT is active.
In this case, the function "Manual tools" is not enabled.
MD22550 $MC_TOOL_CHANGE_MODE = 1
The new tool is prepared for loading on execution of the T function. This setting is used mainly on milling machines with a tool magazine in order to bring the new tool into the tool change position without interrupting the machining process. The M function entered in MD22560 $MC_ TOOL_CHANGE_M_CODE is used to remove the old tool from the spindle and load the new tool onto the spindle. According to DIN 66025, this tool change has to be programmed with M function M06.
Related to:
MD22560 $MC_TOOL_CHANGE_M_CODE

22560	TOOL_CHANGE_M_CODE			C01, C04, C09	H2,K1,W1
-	M function for tool change			DWORD	PowerOn
-					
-	-	6,6,6,6,6,6,6,6,6,6,6,6,6,6,6	0	99999999	1/1

Description: If the T function is only used to prepare a new tool for a tool change (this setting is used mainly on milling machines with a tool magazine, in order to bring the new tool into the tool change position without interrupting the machining process), another M function must be used to trigger the tool change.
The M function entered in TOOL_CHANGE_M_CODE triggers the tool change (remove old tool from the spindle and load new tool into the spindle). This tool change is required to be programmed with M function M06, in accordance with DIN 66025.
Related to:
MD22550 $MC_TOOL_CHANGE_MODE

22562	TOOL_CHANGE_ERROR_MODE			C09	W1
-	Response to tool change errors			DWORD	PowerOn
-					
-	-	0x0,0x0,0x0,0x0,0x0,0x0,0x0,0x0,0x0,0x0...	0	0xFF	1/1

Description: Behavior if faults/problems occur during programmed tool change.
Bit 0=0: Standard behavior: Stop on the faulty NC block
Bit 0=1: If a fault is detected in the block with the tool change preparation, the alarm relevant to the preparation command T is delayed until the corresponding tool change command (M06) has been interpreted in the program sequence. Until then, the alarm triggered by the preparation command is not output. The operator can take corrective actions in this block. When the program continues, the faulty NC block is re-interpreted, and the preparation command is automatically executed again internally.
The value = 1 is relevant only if the setting MD22550 $MC_TOOL_CHANGE_MODE = 1 is used.
Bit 1 Only relevant with active tool management:
Bit 1=0: Standard behavior: Only tools with data assigned to a magazine are detected during tool change preparation.
Bit 1=1: Manual tools can be loaded.

A tool will also be loaded if its data are known in the NCK but have not been assigned to a magazine. In this case, the tool data is automatically assigned to the programmed tool holder.
The user is prompted to insert tools into or remove tools from the tool holder).
Bit 2 modifies the offset programming
Bit 2=0: active D no. > 0 and active T no.=0 gives offset 0
Active D no. > 0 and active D no.=0 gives total offset 0
Bit 2=1: active D no. > 0 and active T no.=0 lead to an alarm message
Active D no. > 0 and active D no.=0 lead to an alarm message
Bits 3 and 4 are only relevant with active tool management.
Function:
Control of the behavior of the init. block generation on program start if a disabled tool is on the spindle and this tool is to be activated.
See MD20112 $MC_START_MODE_MASK, MD20110 $MC_RESET_MODE_MASK
On RESET, this does not affect the behavior "Keep disabled tool on the spindle active".
Bit 3=0: Standard: If the tool on the spindle is disabled, generate a tool change command requesting a replacement tool. An alarm will be generated if there is no such replacement tool.
Bit 3=1: The disabled status of the spindle tool is ignored. The tool becomes active. The subsequent part program should be formulated so that no parts are machined with the disabled tool.
Bit 4=0: Standard: The system tries to activate the spindle tool or its replacement tool.
Bit 4=1: If the tool on the spindle is disabled, T0 is programmed in the start init block.
The combination of bits 3 and 4 produces the following statements:
0 / 0: Behavior as before, automatic change on NC start if a disabled tool is in the spindle
1 / 0: No automatic change
0 / 1: A T0 is automatically generated if a disabled tool is in the spindle at NC start
1 / 1: No statement
Bit 5: Reserved
Bit 6=0: Standard: If T0 or D0, only T0 or D0 is exactly programmed. This means that MD20270 $MC_CUTTING_EDGE_DEFAULT and MD20272 $MC_SUMCORR_DEFAULT determine the value of D and DL for the programming of T0.
Example: MD20270 $MC_CUTTING_EDGE_DEFAULT=1, MD20272 $MC_SUMCORR_DEFAULT=2, MD22550 $MC_TOOL_CHANGE_MODE=0 (tool change with T programming)
N10 T0 ; T no. 0 has active numbers D1 and DL=2, which results in offset zero. If bit 2 is also set:
Programming of
a) T0; for tool deselection
b) D0; for offset deselection
generates an alarm, if
a) at least one of MD20270 $MC_CUTTING_EDGE_DEFAULT and MD20272 $MC_SUMCORR_DEFAULT is unequal to zero (The correct programming is T0 D0 DL=0).
b) MD20272 $MC_SUMCORR_DEFAULT is unequal to zero (The correct programming is D0 DL=0).
Bit 6=1: Controls the NCK behavior when x, y, z are all programmed greater than zero, if at least one of MD20270 $MC_CUTTING_EDGE_DEFAULT and MD20272 $MC_SUMCORR_DEFAULT is unequal to zero.

a) Tx Dy --> T0:
With T0, D0 or D0 DL=0 is automatically programmed in the NCK; i.e. values in MD20270 $MC_CUTTING_EDGE_DEFAULT and $MC_SUMCORR_DEFAULT unequal to zero are treated as values equal to zero.
b) Tx Dy --> T0 Dy, or T0 DL=z, or T0 Dy DL=z, or T0 D0 DL=z, explicitly programmed values of D, DL are not influenced.
c) Dy DL=z --> D0
With D0, DL=0 is automatically programmed in the NCK; i.e. values in MD20272 $MC_SUMCORR_DEFAULT unequal to zero are treated as values equal to zero.
d) Dy DL=z --> D0 DL=z
Explicitly programmed values of DL are not influenced.
If bit 2 is also set:
Only T0 / D0 have to be programmed for tool/offset deselection, and this does not generate an alarm.
The statements relating to MD20272 $MC_SUMCORR_DEFAULT or DL are valid only if the total offset function is active (see MD18080 $MN_MM_TOOL_MANAGEMENT_MASK, bit 8).
Bit 7=0: When Tx is programmed, a check is made to see whether a tool with T number x is known in the TO unit of the channel. If not, the program is stopped in this block with alarm 17190
Bit 7=1: Only if tool basic functionality is active (MD20310 $MC_TOOL_MANAGEMENT_MASK, bit 0,1=0) and (MD18102 $MN_MM_TYPE_OF_CUTTING_EDGE=0):
When Tx is programmed, an unknown Tx is intially be ignored, and the alarm relating to the preparation command (Tx) is also ignored until the D selection is interpreted in the program sequence. Only then is alarm 17191, which has been triggered by the preparation command, output. This means that the operator can take corrective actions with the D selection in this block. When the program is continued, the incorrect NC block is re-interpreted, and the preparation command is automatically executed again internally.
(This is of interest for Cutting-Edge-Default=0 or =-2 and D0 programming, otherwise the D of Cutting-Edge-Default is deselected on tool change.)
This variant is justified for programming "Tool number=Location" (revolver as tool holder) without tool management. The revolver can now positioned on a location for which a tool has not (yet) been defined.
This bit has no meaning if bit 0=1 is set.

22600	SERUPRO_SPEED_MODE			EXP	K1
-	Speed for block search run type 5			DWORD	Immediately
-					
-	-	1,1,1,1,1,1,1,1,1,1,1,1,1,1,1,1	-	-	1/1

Description: This machine data specifies the search run mode: SERUPRO in more detail.
SERUPRO search run is activated with PI service _N_FINDBL mode parameter = 5.
SERUPRO means SEarchRUn by PROgram test, i.e. traversing under program test from beginning of program to search target.

Note:
Program test does not move any axes/spindles.
Bit0 and Bit1:
==========
0: Under program test, the axes/spindles are traversed at the following speeds:
Axes: MD22601 $MC_SERUPRO_SPEED_FACTOR*dry run feed.
Spindles: MD22601 $MC_SERUPRO_SPEED_FACTOR*programmed speed.
Dynamic axis / spindle limitations are not taken into account.
1: Under program test, the axes/spindles are traversed at the following speeds:
Axes: at the same velocity as dry run feed.
Spindles: at the programmed speed.
Dynamic axis / spindle limitations are taken into account.
2: Under program test, the axes/spindles are traversed at the programmed velocity/speed.
Dynamic axis /spindle limitations are taken into account.
3: Not assigned.
Related to:
SD42100 $SC_DRY_RUN_FEED, MD22601 $MC_SERUPRO_SPEED_FACTOR

22601	SERUPRO_SPEED_FACTOR			EXP	K1
-	Speed factor for search run type 5			DOUBLE	Immediately
-					
-	-	10.0,10.0,10.0,10.0,10.0,10.0,10.0...	1.0	-	1/1

Description: SERUPRO means SEarch RUn by PROgram test, i.e. traversing under program test from beginning of program to search target.
Note:
Program test does not move any axes / spindles.
The machine data is relevant only if the first two bits of MD22600 $MC_SERUPRO_SPEED_MODE are 0. The machine data has the following meaning:
Axes: MD specifies the factor by which the test run feedrate is multiplied.
Spindles: MD specifies the factor by which the programmed speed is multiplied.
Dynamic limitations of axes / spindles are always ignored.
Related to:
SD42100 $SC_DRY_RUN_FEED, MD22600 $MC_SERUPRO_SPEED_MODE

22620	START_MODE_MASK_PRT			EXP, C03	M3,K1
-	Initial setting on special starts			DWORD	Reset
-					
-	-	0x400,0x400,0x400,0x400,0x400,0x400...	0	0xFFFF	1/1

Description: This machine data is activated via MD22621 $MC_ENABLE_START_MODE_MASK_PRT.
If MD22621 $MC_ENABLE_START_MODE_MASK_PRT is in its initial setting, MD22620 $MC_START_MODE_MASK_PRT is inactive.

If MD22620 $MC_START_MODE_MASK_PRT is activated for "search via program test" (abbr. SERUPRO), then MD22620 $MC_START_MODE_MASK_PRT replaces MD20112 $MC_START_MODE_MASK when "search via program test" is started.
This enables a behavior deviating from PLC start to be set at the start of the search. The meaning of the bit-by-bit assignment of MD22620 $MC_START_MODE_MASK_PRT is the same as that in MD20112 $MC_START_MODE_MASK.

22621	ENABLE_START_MODE_MASK_PRT			EXP, C03	M3,K1
-	Enables MD22620 $MC_START_MODE_MASK_PRT			DWORD	Reset
-					
-	-	0x0,0x0,0x0,0x0,0x0,0x0,0x0,0x0,0x0,0x0...	0	0x1	1/1

Description:

MD22620 $MC_START_MODE_MASK_PRT is activated via MD22621 $MC_ENABLE_START_MODE_MASK_PRT.
If MD22621 $MC_ENABLE_START_MODE_MASK_PRT is in its initial setting, MD22620 $MC_START_MODE_MASK_PRT is inactive.
Bit0 = 1:

If a "search via program test" (English abbr. SERUPRO) is started from RESET (PI service _N_FINDBL mode paramter == 5), MD22620 $MC_START_MODE_MASK_PRT replaces MD20112 $MC_START_MODE_MASK.

This method can be used to set a start behavior differing from PLC start when the search
is started.

22622	DISABLE_PLC_START			EXP	-
-	Enable part program start via PLC			DWORD	PowerOn
-					
-	-	0x0,0x0,0x0,0x0,0x0,0x0,0x0,0x0,0x0,0x0...	-	-	1/1

Description:

Allow part program start via PLC.
This machine data will ONLY be evaluated, if "Group-Serupro" mode is switched on.
"Group-Serupro" is switched on by means of "$MC_SERUPRO_MODE BIT2".
BIT0 = 0

A part program can be started in this channel only via the PLC. Starting via the part program command "START" is interlocked.

BIT0 = 1

A part program can be started in this channel only by means of the part program command "START" from another channel. Starting via the PLC is interlocked.

22680	AUTO_IPTR_LOCK			EXP, C03	K1
-	Disable interrupt pointer			DWORD	Reset
-					
-	-	0x0,0x0,0x0,0x0,0x0,0x0,0x0,0x0,0x0,0x0...	0	0x3	0/0

Description:

With MD22680 $MC_AUTO_IPTR_LOCK program areas are defined in which the individually indicated coupling types are active. If a program abort is executed in a program range that is defined as such, it will not be the currently executed part program block that is stored in the interrupt pointer (OPI module InterruptionSearch),but the last block prior to activation of the coupling.

22900	STROKE_CHECK_INSIDE			EXP, C01, C11	-
-	Direction (inside/outside) in which prot. zone 3 is effective			BOOLEAN	PowerOn
-					
802d-cu3	-	FALSE,FALSE,FALSE,FALSE,FALSE,FALSE...	-	-	1/1
802d-ng2	-	FALSE,FALSE,FALSE,FALSE,FALSE,FALSE...	-	-	0/0
802d-ng3	-	FALSE,FALSE,FALSE,FALSE,FALSE,FALSE...	-	-	0/0
802d-tm1	-	FALSE,FALSE,FALSE,FALSE,FALSE,FALSE...	-	-	0/0
802d-tm2	-	FALSE,FALSE,FALSE,FALSE,FALSE,FALSE...	-	-	0/0
802d-tm3	-	FALSE,FALSE,FALSE,FALSE,FALSE,FALSE...	-	-	0/0

Description: This MD defines whether protection zone 3 is a protection zone inside or outside.
Meaning:
0: Protection zone 3 is a protection zone inside, i.e. the protection zone must not entered inwardly.
1: Protection zone 3 is a protection zone outside

22910	WEIGHTING_FACTOR_FOR_SCALE			EXP, C01, C11	-
-	Input resolution for scaling factor			BOOLEAN	PowerOn
-					
802d-cu3	-	FALSE,FALSE,FALSE,FALSE,FALSE,FALSE...	-	-	2/2
802d-ng2	-	FALSE,FALSE,FALSE,FALSE,FALSE,FALSE...	-	-	0/0
802d-ng3	-	FALSE,FALSE,FALSE,FALSE,FALSE,FALSE...	-	-	0/0
802d-tm1	-	FALSE,FALSE,FALSE,FALSE,FALSE,FALSE...	-	-	2/2
802d-tm2	-	FALSE,FALSE,FALSE,FALSE,FALSE,FALSE...	-	-	2/2
802d-tm3	-	FALSE,FALSE,FALSE,FALSE,FALSE,FALSE...	-	-	2/2

Description: Definition of the unit for the scaling factor P and for the axial scaling factors I, J, K.
Meaning:
0 Scale factor in 0.001
1 Scale factor in 0.00001

Related to:
SD43120 $SA_DEFAULT_SCALE_FACTOR_AXIS,
SD42140 $SC_DEFAULT_SCALE_FACTOR_P

22914	AXES_SCALE_ENABLE			EXP, C01, C11	-
-	Activation for axial scaling factor (G51)			BOOLEAN	PowerOn
-					
802d-cu3	-	FALSE,FALSE,FALSE,FALSE,FALSE,FALSE...	-	-	2/2
802d-ng2	-	FALSE,FALSE,FALSE,FALSE,FALSE,FALSE...	-	-	0/0
802d-ng3	-	FALSE,FALSE,FALSE,FALSE,FALSE,FALSE...	-	-	0/0
802d-tm1	-	FALSE,FALSE,FALSE,FALSE,FALSE,FALSE...	-	-	2/2
802d-tm2	-	FALSE,FALSE,FALSE,FALSE,FALSE,FALSE...	-	-	2/2
802d-tm3	-	FALSE,FALSE,FALSE,FALSE,FALSE,FALSE...	-	-	2/2

Description: This MD enables axial scaling.
Meaning:
0: Axial scaling not possible
1: Axial scaling possible -> MD DEFAULT_SCALE_FACTOR_AXIS is active
Related to:
SD43120 $SA_DEFAULT_SCALE_FACTOR_AXIS

22920	EXTERN_FIXED_FEEDRATE_F1_ON			EXP, C01, C11	-
-	Activation of fixed feedrates F1 - F9			BOOLEAN	PowerOn
-					
802d-cu3	-	FALSE,FALSE,FALSE,FALSE,FALSE,FALSE...	-	-	2/2
802d-ng2	-	FALSE,FALSE,FALSE,FALSE,FALSE,FALSE...	-	-	0/0
802d-ng3	-	FALSE,FALSE,FALSE,FALSE,FALSE,FALSE...	-	-	0/0
802d-tm1	-	FALSE,FALSE,FALSE,FALSE,FALSE,FALSE...	-	-	2/2
802d-tm2	-	FALSE,FALSE,FALSE,FALSE,FALSE,FALSE...	-	-	2/2
802d-tm3	-	FALSE,FALSE,FALSE,FALSE,FALSE,FALSE...	-	-	2/2

Description: This MD is used to activate the fixed feedrates set in SD42160 $SC_EXTERN_FIXED_FEEDRATE_F1_F9[].
Meaning:
0: no fixed feedrates with F1 - F9
1: the feedrates set in SD42160 $SC_EXTERN_FIXED_FEEDRATE_F1_F9[] become active when F1 - F9 are programmed.

22930	EXTERN_PARALLEL_GEOAX			EXP, C01, C11	-
-	Assignment of a parallel channel axis to the geometry axis			BYTE	PowerOn
-					
802d-cu3	3	0, 0, 0,0, 0, 0,0, 0, 0,0, 0, 0...	0	20	2/2
802d-ng2	3	0, 0, 0,0, 0, 0,0, 0, 0,0, 0, 0...	0	20	-1/2
802d-ng3	3	0, 0, 0,0, 0, 0,0, 0, 0,0, 0, 0...	0	20	-1/2
802d-tm1	3	0, 0, 0,0, 0, 0,0, 0, 0,0, 0, 0...	0	20	2/2
802d-tm2	3	0, 0, 0,0, 0, 0,0, 0, 0,0, 0, 0...	0	20	2/2
802d-tm3	3	0, 0, 0,0, 0, 0,0, 0, 0,0, 0, 0...	0	20	2/2

Description: Assignment table of the axes positioned parallel to the geometry axes.
This table can be used to assign channel axes positioned parallel to the geometry axes. The parallel axes can then be activated as geometry axes in ISO mode using the G functions of plane selection (G17 - G19) and the axis name of the parallel axis. The axis is then replaced by the axis defined via MD20050 $MC_AXCONF_GEOAX_ASSIGN_TAB[].
Prerequisite:
The channel axes used must be active. (list position assigned in AXCONF_MACHAX_USED). Entering zero deactivates the corresponding parallel geometry axis:

24000	FRAME_ADD_COMPONENTS			C03	K2
-	Frame components for G58 and G59			BOOLEAN	PowerOn
-					
-	-	FALSE,FALSE,FALSE,FALSE,FALSE,FALSE...	-	-	0/0

Description: Additive programmable frame components can be separately programmed and modified.
0: Additive translations which have been programmed with ATRANS are stored in the frame together with the absolute translation (prog. with TRANS).
G58 and G59 are not possible.
1: The sum of the additive translations are stored in the fine offset of the programmable frame. The absolute and the additive translations can be changed independently of one another.
G58 and G59 are possible.

24002	CHBFRAME_RESET_MASK			C03	K2
-	Active channel-specific base frames after reset			DWORD	Reset
-					
-	-	0xFFFF,0xFFFF,0xFFFF,0xFFFF,0xFFFF...	0	0xFFFF	0/0

Description: Bit mask for the reset setting of the channel-specific base frames which are included in the channel.
The following apply:
If MD20110 $MC_RESET_MODE_MASK bit0 = 1 and BIT14 = 1
the entire base frame is determined on reset by chaining the base frame field elements, whose bit is 1 in the bit mask.
If MD20110 $MC_RESET_MODE_MASK bit0 = 1 and BIT14 = 0
the entire base frame is deselected on reset.

24004	CHBFRAME_POWERON_MASK			C03	K2
-	Reset channel-specific base frames after power on			DWORD	PowerOn
-					
-	-	0x0,0x0,0x0,0x0,0x0,0x0,0x0,0x0,0x0,0x0...	0	0xFFFF	0/0

Description: This machine data defines whether channel-specific base frames are reset in the data management on Power On.
That is
- Offsets and rotations are set to 0,
- Scalings are set to 1.
- Mirror image machining is disabled.

The selection can be made separately for individual base frames.
Bit 0 means base frame 0, bit 1 base frame 1 etc.
Value=0: Base frame is retained on Power On
Value=1: Base frame is reset in the data management on Power On.
Related to:
MD10615 $MN_NCBFRAME_POWERON_MASK

24006	CHSFRAME_RESET_MASK			C03	K2
-	Active system frames after reset			DWORD	Reset
-					
-	-	0x1,0x1,0x1,0x1,0x1,0x1,0x1,0x1,0x1,0x1...	0	0x00000FFF	0/0

Description: Bit mask used for the reset setting of the channel-specific system frames included in the channel.
Bit 0: System frame for actual value setting and scratching is active after reset.
Bit 1: System frame for external work offset is active after reset.
Bit 2: Reserved, for TCARR and PAROT see MD20150 $MC_GCODE_RESET_VALUES[].
Bit 3: Reserved, for TOROT and TOFRAME see MD20150 $MC_GCODE_RESET_VALUES[].
Bit 4: System frame for workpiece reference points is active after reset.
Bit 5: System frame for cycles is active after reset.
Bit 6: Reserved; reset behavior dependent on MD20110 $MC_RESET_MODE_MASK.
Bit 7:System frame $P_ISO1FR (ISO G51.1 Mirror) is active after reset.
Bit 8:System frame $P_ISO2FR (ISO G68 2DROT) is active after reset.

Bit 9:System frame $P_ISO3FR (ISO G68 3DROT) is active after reset.
Bit 10:System frame $P_ISO4FR (ISO G51 Scale) is active after reset.
Bit 11: System frame $P_RELFR is active after reset.
Related to:
MD28082 $MC_MM_SYSTEM_FRAME_MASK

24007	CHSFRAME_RESET_CLEAR_MASK			C03	K2
-	Deletion of system frames after reset			DWORD	Reset
-					
802d-cu3	-	0x0,0x0,0x0,0x0,0x0,0x0,0x0,0x0,0x0,0x0...	0	0x00000FFF	1/1
802d-ng2	-	0x0,0x0,0x0,0x0,0x0,0x0,0x0,0x0,0x0,0x0...	0	0x00000FFF	1/1
802d-ng3	-	0x0,0x0,0x0,0x0,0x0,0x0,0x0,0x0,0x0,0x0...	0	0x00000FFF	1/1
802d-tm1	-	0x0,0x0,0x0,0x0,0x0,0x0,0x0,0x0,0x0,0x0...	0	0x00000FFF	0/0
802d-tm2	-	0x0,0x0,0x0,0x0,0x0,0x0,0x0,0x0,0x0,0x0...	0	0x00000FFF	0/0
802d-tm3	-	0x0,0x0,0x0,0x0,0x0,0x0,0x0,0x0,0x0,0x0...	0	0x00000FFF	0/0

Description: Bit mask used to delete channel-specific system frames from the data management on reset.
Bit 0: System frame for actual value setting and scratching is deleted on reset.
Bit 1: System frame for exernal work offset is deleted on reset.
Bit 2: Reserved, for TCARR and PAROT, see MD20150 $MC_GCODE_RESET_VALUES[].
Bit 3: Reserved, for TOROT and TOFRAME, see MD20150 $MC_GCODE_RESET_VALUES[].
Bit 4: System frame for workpiece reference points is deleted on reset.
Bit 5: System frame for cycles is deleted on reset.
Bit 6: Reserved; reset behavior depends on MD20110 $MC_RESET_MODE_MASK.
Bit 7:System frame $P_ISO1FR (ISO G51.1 Mirror) is deleted on reset.
Bit 8:System frame $P_ISO2FR (ISO G68 2DROT) is deleted on reset.
Bit 9:System frame $P_ISO3FR (ISO G68 3DROT) is deleted on reset.
Bit 10:System frame $P_ISO4FR (ISO G51 Scale) is deleted on reset.
Bit 11: System frame $P_RELFR is deleted on reset.

24008	CHSFRAME_POWERON_MASK			C03	K2
-	Reset channel system frames after power on			DWORD	PowerOn
-					
802d-cu3	-	0x0,0x0,0x0,0x0,0x0,0x0,0x0,0x0,0x0,0x0...	0	0x00000FFF	1/1
802d-ng2	-	0x0,0x0,0x0,0x0,0x0,0x0,0x0,0x0,0x0,0x0...	0	0x00000FFF	1/1
802d-ng3	-	0x0,0x0,0x0,0x0,0x0,0x0,0x0,0x0,0x0,0x0...	0	0x00000FFF	1/1
802d-tm1	-	0x0,0x0,0x0,0x0,0x0,0x0,0x0,0x0,0x0,0x0...	0	0x00000FFF	0/0
802d-tm2	-	0x0,0x0,0x0,0x0,0x0,0x0,0x0,0x0,0x0,0x0...	0	0x00000FFF	0/0
802d-tm3	-	0x0,0x0,0x0,0x0,0x0,0x0,0x0,0x0,0x0,0x0...	0	0x00000FFF	0/0

Description: This machine data defines whether channel-specific system frames are reset in the data management on Power On. That is offsets and rotations are set to 0, scalings to 1. Mirroring is disabled.
The selection can be made separately for individual system frames.
Bit 0:System frame for set actual value and scratching is deleted after Power On.
Bit 1:System frame for external work offset is deleted after Power On.
Bit 2:System frame for TCARR and PAROT is deleted after Power On.
Bit 3:System frame for TOROT and TOFRAME is deleted after Power On.
Bit 4:System frame for work piece reference points deleted after Power On.
Bit 5:System frame for cycles retained after Power On.
Bit 6:System frame for transformations deleted after Power On.
Bit 7:System frame $P_ISO1FR (ISO G51.1 Mirror) is deleted after power ON.
Bit 8:System frame $P_ISO2FR (ISO G68 2DROT) is deleted after power ON.
Bit 9:System frame $P_ISO3FR (ISO G68 3DROT) is deleted after power ON.
Bit 10:System frame $P_ISO4FR (ISO G51 Scale) is deleted after power ON.
Bit 11:System frame $P_RELFR is deleted after power ON.
Related to:
MD28082 $MC_MM_SYSTEM_FRAME_MASK

24010	PFRAME_RESET_MODE			C03	K2
-	Reset mode for programmable frame			DWORD	PowerOn
-					
802d-cu3	-	0,0,0,0,0,0,0,0,0,0,0,0,0,0,0,0	0	1	1/1
802d-ng2	-	0,0,0,0,0,0,0,0,0,0,0,0,0,0,0,0	0	1	1/1
802d-ng3	-	0,0,0,0,0,0,0,0,0,0,0,0,0,0,0,0	0	1	1/1
802d-tm1	-	0,0,0,0,0,0,0,0,0,0,0,0,0,0,0,0	0	1	0/0
802d-tm2	-	0,0,0,0,0,0,0,0,0,0,0,0,0,0,0,0	0	1	0/0
802d-tm3	-	0,0,0,0,0,0,0,0,0,0,0,0,0,0,0,0	0	1	0/0

Description: 0: Programmable frame is deleted at reset.
1: Programmable frame remains active at reset.

24020	FRAME_SUPPRESS_MODE			C03	K2
-	Positions for frame suppression			DWORD	PowerOn
-					
-	-	0x0,0x0,0x0,0x0,0x0,0x0,0x0,0x0,0x0,0x0...	0	0x0000003	2/2

Description: Bit mask for configuring the positions for frame suppressions (SUPA, G153, G53).
The following rule applies:
Bit 0: Positions for display (OPI) without frame suppression
Bit 1: Position variables without frame suppression

24040	FRAME_ADAPT_MODE			C03	K2
-	Adaptation of active frames			DWORD	PowerOn
-					
-	-	0x0,0x0,0x0,0x0,0x0,0x0,0x0,0x0,0x0,0x0...	0	0x0000007	1/1

Description: Bit mask for adapting the active frames or axis configuration
The following applies:
Bit 0:
Rotations in active frames that rotate coordinate axes for which there are no geometry axes are deleted from the active frames.
Bit 1:
Shear angles in active frames are orthogonalized.
Bit 2:
Scalings of all geometry axes in the active frames are set to value 1.

24050	FRAME_SAA_MODE			C03	-
-	Saving and activating of data management frames			DWORD	PowerOn
-					
-	-	0x0,0x0,0x0,0x0,0x0,0x0,0x0,0x0,0x0,0x0...	0	0x0000003	1/1

Description: Bit mask for saving and activating data handling frames.
The following applies:
Bit 0:
Data handling frames are only activated by programming the bit masks $P_CHBFRMASK, $P_NCBFRMASK and $P_CHSFRMASK. G500..G599 only activate the relevant settable frame. The reset behavior is independent of this.
Bit 1:
Data handling frames are not written implicitly by system functions such as TOROT, PAROT, ext. work offset, transformations.

24080	USER_FRAME_POWERON_MASK			N01	-
-	Parameterize properties for settable frame			DWORD	PowerOn
-					
-	-	0x0,0x0,0x0,0x0,0x0,0x0,0x0,0x0,0x0,0x0...	0	0x1	7/2

Description: Setting the following bits activates certain properties of the settable frame:
Bit 0 = 0: default behavior.
Bit 0 = 1: if MD20152 $MC_GCODE_RESET_MODE[7] = 1, the last active settable frame is selected again according to G code group 8 after power up of the control.

2.3.4 Transformation definitions in channel

24100	TRAFO_TYPE_1			C07	F2,TE4,M1,K1,W1
-	Definition of transformation 1 in channel			DWORD	NEW CONF
-					
802d-cu3	-	0,0,0,0,0,0,0,0,0,0,0,0,0,0,0,0	-	-	2/2
802d-ng2	-	0,0,0,0,0,0,0,0,0,0,0,0,0,0,0,0	-	-	2/2
802d-ng3	-	0,0,0,0,0,0,0,0,0,0,0,0,0,0,0,0	-	-	2/2
802d-tm1	-	0,0,0,0,0,0,0,0,0,0,0,0,0,0,0,0	-	-	0/0
802d-tm2	-	0,0,0,0,0,0,0,0,0,0,0,0,0,0,0,0	-	-	2/2
802d-tm3	-	0,0,0,0,0,0,0,0,0,0,0,0,0,0,0,0	-	-	2/2

Description: This MD specifies the first available transformation in each channel.
The 4 low-value bits identify the specific transformation of a specific transformation group. The transformation group is identified by a number starting with the 5th bit.
Meaning:
0 No transformation
16 and higher
5-axis transformation with turnable tool
32 and higher
5-axis transformation with turnable workpiece
48 and higher
5-axis transformation with turnable tool and turnable workpiece
72
Generic 5-axis transformation. Type and kinematic data are determined by an associated, orientable tool carrier, see MD24582 $MC_TRAFO5_TCARR_NO_1 and MD24682 $MC_TRAFO5_TCARR_NO_2

The 4 low-value bits have the following meaning for a 5-axis transformation:

0 Axis sequence AB
1 Axis sequence AC
2 Axis sequence BA
3 Axis sequence BC
4 Axis sequence CA
5 Axis sequence CB
8 Generic orientation transformation (3- 5 axes)

256 and higher

TRANSMIT transformation

512 and higher

TRACYL transformation

1024 and higher

TRAANG transformation

2048

TRACLG: centerless transformation

From 4096 to 4098

OEM transformation

8192 and higher

TRACON: cascaded transformations

Example:

A 5-axis transformation with turnable tool and axis sequence CA (i.e. C axis turns A axis) has number 20 (= 16 + 4)

Notice:

Not all combinations of group numbers and axis sequence numbers are allowed. An error message is output if a number for a non-existent transformation is entered.

Related to:

MD24200 $MC_TRAFO_TYPE_2, MD24300 $MC_TRAFO_TYPE_3, ... MD24460 $MC_TRAFO_TYPE_8

References:

/FB/, F2, "5-Axis Transformation"

24110	TRAFO_AXES_IN_1			C07	F2,TE4,M1,K1,W1
-	Axis assignment for the 1st transformation in the channel			BYTE	NEW CONF
-					
802d-cu3	6	1, 2, 3, 4, 5, 0, 0, 0, 0, 0, 0, 0, 0, 0, 0, 0, 0, 0, 0, 0, 0...	0	20	2/2
802d-ng2	6	1, 2, 3, 4, 5, 0, 0, 0, 0, 0, 0, 0, 0, 0, 0, 0, 0, 0, 0, 0, 0...	0	20	2/2
802d-ng3	6	1, 2, 3, 4, 5, 0, 0, 0, 0, 0, 0, 0, 0, 0, 0, 0, 0, 0, 0, 0, 0...	0	20	2/2
802d-tm1	4	1, 2, 3, 4, 5, 0, 0, 0, 0, 0, 0, 0, 0, 0, 0, 0, 0, 0, 0, 0, 0...	0	20	0/0
802d-tm2	6	1, 2, 3, 4, 5, 0, 0, 0, 0, 0, 0, 0, 0, 0, 0, 0, 0, 0, 0, 0, 0...	0	20	2/2
802d-tm3	6	1, 2, 3, 4, 5, 0, 0, 0, 0, 0, 0, 0, 0, 0, 0, 0, 0, 0, 0, 0, 0...	0	20	2/2

Description:

```
Axis assignment at input point of 1st transformation
Example for Transmit:
Index i adopts the values 0, 1, 2 with TRANSMIT.
$MC_TRAFO_AXES_IN_1[0]= channel axis number of the axis vertical to rotary
axis
$MC_TRAFO_AXES_IN_1[1]=channel axis number of rotary axis
$MC_TRAFO_AXES_IN_1[2]=channel axis number of the axis parallel to rotary
axis
Example for TRACYL: see TRACYL Section

Not relevant:
 no transformation
Releated to:
   MD24200 $MC_TRAFO_TYPE_2
```

24120	TRAFO_GEOAX_ASSIGN_TAB_1			C07	F2,TE4,TE4,M1,K1,W1
-	Assignment of the geometry axes to channel axes for transformation 1			BYTE	NEW CONF
-					
802d-cu3	3	0, 0, 0,0, 0, 0,0, 0, 0,0, 0, 0...	0	20	2/2
802d-ng2	3	0, 0, 0,0, 0, 0,0, 0, 0,0, 0, 0...	0	20	2/2
802d-ng3	3	0, 0, 0,0, 0, 0,0, 0, 0,0, 0, 0...	0	20	2/2
802d-tm1	3	0, 0, 0,0, 0, 0,0, 0, 0,0, 0, 0...	0	20	0/0
802d-tm2	3	0, 0, 0,0, 0, 0,0, 0, 0,0, 0, 0...	0	20	2/2
802d-tm3	3	0, 0, 0,0, 0, 0,0, 0, 0,0, 0, 0...	0	20	2/2

Description: This MD states the channel axes on which the axes of the cartesian coordinate system are mapped for active transformation 1.
Index i adopts the values 0, 1, 2 for TRANSMIT. It refers to the first, second and third geometry axis.
Not relevant:
No transformation
Application example:
MD20050 $MC_TRAFO_GEOAX_ASSIGN_TAB_1[0]= 2 ; 2nd channel axis
Related to:
MD20050 $MC_AXCONF_GEOAX_ASSIGN_TAB, if no transformation is active.

24130	TRAFO_INCLUDES_TOOL_1			C07	-
-	Tool handling with 1st active transformation			BOOLEAN	NEW CONF
-					
802d-cu3	-	TRUE,TRUE,TRUE,TRUE,TRUE,TRUE,TRUE...	-	-	2/2
802d-ng2	-	TRUE,TRUE,TRUE,TRUE,TRUE,TRUE,TRUE...	-	-	2/2
802d-ng3	-	TRUE,TRUE,TRUE,TRUE,TRUE,TRUE,TRUE...	-	-	2/2
802d-tm1	-	TRUE,TRUE,TRUE,TRUE,TRUE,TRUE,TRUE...	-	-	0/0
802d-tm2	-	TRUE,TRUE,TRUE,TRUE,TRUE,TRUE,TRUE...	-	-	2/2
802d-tm3	-	TRUE,TRUE,TRUE,TRUE,TRUE,TRUE,TRUE...	-	-	2/2

Description: This machine data states for each channel whether the tool is handled during the 1st transformation or externally.
This machine data is evaluated only with specific transformations.
It is evaluated on the condition that the orientation of the tool with reference to the Basic Coordinate System cannot be changed by the transformation. In standard transformations, only the "inclined-axis transformation" fulfills this condition.
If this machine data is set, the Basic Coordinate System (BCS) refers to the tool reference point even with active transformations. Otherwise, it refers to the tool tip (Tool Center Point - TCP).
The method of operation of protection zones and working area limitations varies correspondingly.

24200	TRAFO_TYPE_2			C07	F2,M1
-	Definition of the 2nd transformation in the channel			DWORD	NEW CONF
-					
802d-cu3	-	0,0,0,0,0,0,0,0,0,0,0,0,0,0,0,0	-	-	2/2
802d-ng2	-	0,0,0,0,0,0,0,0,0,0,0,0,0,0,0,0	-	-	2/2
802d-ng3	-	0,0,0,0,0,0,0,0,0,0,0,0,0,0,0,0	-	-	2/2
802d-tm1	-	0,0,0,0,0,0,0,0,0,0,0,0,0,0,0,0	-	-	0/0
802d-tm2	-	0,0,0,0,0,0,0,0,0,0,0,0,0,0,0,0	-	-	2/2
802d-tm3	-	0,0,0,0,0,0,0,0,0,0,0,0,0,0,0,0	-	-	2/2

Description: This MD states the second available transformation in each channel.
Same as TRAFO_TYPE_1, but for the second available transformation in the channel.
References:
/FB/, F2, "5-Axis Transformation"

24210	TRAFO_AXES_IN_2			C07	F2,M1
-	Axis assignment for transformation 2			BYTE	NEW CONF
-					
802d-cu3	6	1, 2, 3, 4, 5, 0, 0, 0, 0, 0, 0, 0, 0, 0, 0, 0, 0, 0, 0, 0, 0...	0	20	2/2
802d-ng2	6	1, 2, 3, 4, 5, 0, 0, 0, 0, 0, 0, 0, 0, 0, 0, 0, 0, 0, 0, 0, 0...	0	20	2/2
802d-ng3	6	1, 2, 3, 4, 5, 0, 0, 0, 0, 0, 0, 0, 0, 0, 0, 0, 0, 0, 0, 0, 0...	0	20	2/2
802d-tm1	4	1, 2, 3, 4, 5, 0, 0, 0, 0, 0, 0, 0, 0, 0, 0, 0, 0, 0, 0, 0, 0...	0	20	0/0
802d-tm2	6	1, 2, 3, 4, 5, 0, 0, 0, 0, 0, 0, 0, 0, 0, 0, 0, 0, 0, 0, 0, 0...	0	20	2/2
802d-tm3	6	1, 2, 3, 4, 5, 0, 0, 0, 0, 0, 0, 0, 0, 0, 0, 0, 0, 0, 0, 0, 0...	0	20	2/2

Description: TRAFO_AXES_IN_2(n)
Axis assignment at input of 2nd to 8th transformation.
Same meaning as for TRAFO_AXES_IN_1.

24220	TRAFO_GEOAX_ASSIGN_TAB_2			C07	F2,M1
-	Assignment of geometry axes to channel axes for transformation 2			BYTE	NEW CONF
-					
802d-cu3	3	0, 0, 0,0, 0, 0,0, 0, 0,0, 0, 0...	0	20	2/2
802d-ng2	3	0, 0, 0,0, 0, 0,0, 0, 0,0, 0, 0...	0	20	2/2
802d-ng3	3	0, 0, 0,0, 0, 0,0, 0, 0,0, 0, 0...	0	20	2/2
802d-tm1	3	0, 0, 0,0, 0, 0,0, 0, 0,0, 0, 0...	0	20	0/0
802d-tm2	3	0, 0, 0,0, 0, 0,0, 0, 0,0, 0, 0...	0	20	2/2
802d-tm3	3	0, 0, 0,0, 0, 0,0, 0, 0,0, 0, 0...	0	20	2/2

Description: This MD states the channel axes on which the axes of the cartesian coordinate system are mapped for active transformation 2.
Otherwise the meaning corresponds to TRAFO_GEOAX_ASSIGN_TAB_1.

24230	TRAFO_INCLUDES_TOOL_2			C07	-
-	Tool handling with active 2nd transformation			BOOLEAN	NEW CONF
-					
802d-cu3	-	TRUE,TRUE,TRUE,TRUE,TRUE,TRUE,TRUE...	-	-	2/2
802d-ng2	-	TRUE,TRUE,TRUE,TRUE,TRUE,TRUE,TRUE...	-	-	2/2
802d-ng3	-	TRUE,TRUE,TRUE,TRUE,TRUE,TRUE,TRUE...	-	-	2/2
802d-tm1	-	TRUE,TRUE,TRUE,TRUE,TRUE,TRUE,TRUE...	-	-	0/0
802d-tm2	-	TRUE,TRUE,TRUE,TRUE,TRUE,TRUE,TRUE...	-	-	2/2
802d-tm3	-	TRUE,TRUE,TRUE,TRUE,TRUE,TRUE,TRUE...	-	-	2/2

Description: This machine data states for each channel whether the tool is handled during the 2nd transformation or externally.
This machine data is evaluated only with specific transformations.
It is evaluated on the condition that the orientation of the tool with reference to the Basic Coordinate System cannot be changed by the transformation. In standard transformations, only "inclined-axis transformation" fulfills this condition.
If this machine data is set, the Basic Coordinate System (BCS) refers to the tool reference point even with active transformations. Otherwise, it refers to the tool tip (Tool Center Point - TCP).
The method of operation of protection zones and working area limitations varies correspondingly.

24300	TRAFO_TYPE_3			C07	M1
-	Definition of the 3rd transformation in the channel			DWORD	NEW CONF
-					
-	-	0,0,0,0,0,0,0,0,0,0,0,0,0,0,0,0	-	-	-1/7

Description: This MD states the third available transformation in each channel.
Same as TRAFO_TYPE_1, but for the third available transformation in the channel.
References:
/FB/, F2, "5-Axis Transformation"

24310	TRAFO_AXES_IN_3			C07	M1
-	Axis assignment for transformation 3			BYTE	NEW CONF
-					
802d-cu3	6	1, 2, 3, 4, 5, 0, 0, 0, 0, 0, 0, 0, 0, 0, 0, 0, 0, 0, 0, 0, 0, 0, 0...	0	20	-1/7
802d-ng2	6	1, 2, 3, 4, 5, 0, 0, 0, 0, 0, 0, 0, 0, 0, 0, 0, 0, 0, 0, 0, 0, 0, 0...	0	20	-1/7
802d-ng3	6	1, 2, 3, 4, 5, 0, 0, 0, 0, 0, 0, 0, 0, 0, 0, 0, 0, 0, 0, 0, 0, 0, 0...	0	20	-1/7
802d-tm1	4	1, 2, 3, 4, 5, 0, 0, 0, 0, 0, 0, 0, 0, 0, 0, 0, 0, 0, 0, 0, 0, 0, 0...	0	20	-1/7
802d-tm2	6	1, 2, 3, 4, 5, 0, 0, 0, 0, 0, 0, 0, 0, 0, 0, 0, 0, 0, 0, 0, 0, 0, 0...	0	20	-1/7
802d-tm3	6	1, 2, 3, 4, 5, 0, 0, 0, 0, 0, 0, 0, 0, 0, 0, 0, 0, 0, 0, 0, 0, 0, 0...	0	20	-1/7

Description: Axis assignment at the input point of the 3rd transformation in the channel.
Meaning is the same as TRAFO_AXES_IN_1, but for the third available transformation in the channel.

24320	TRAFO_GEOAX_ASSIGN_TAB_3			C07	M1
-	Assignment of geometry axes to channel axes for transformation 3			BYTE	NEW CONF
-					
-	3	0, 0, 0,0, 0, 0,0, 0, 0,0, 0, 0...	0	20	-1/7

Description: This MD states the channel axes on which the axes of the cartesian coordinate system are mapped for active transformation 3.
Otherwise the meaning corresponds to TRAFO_GEOAX_ASSIGN_TAB_1.

24330	TRAFO_INCLUDES_TOOL_3			C07	-
-	Tool handling with active 3rd transformation			BOOLEAN	NEW CONF
-					
-	-	TRUE,TRUE,TRUE,TRUE,TRUE,TRUE,TRUE...	-	-	-1/7

Description: This machine data states for each channel whether the tool is handled during the 3rd transformation or externally.
This machine data is evaluated only with specific transformations.
It is evaluated on the condition that the orientation of the tool with reference to to the Basic Coordinate System cannot be changed by the transformation. In standard transformations, only "inclined-axis transformation" fulfills this condition.
If this machine data is set, the Basic Coordinate System (BCS) refers to the tool reference point even with active transformations. Otherwise, it refers to the tool tip (Tool Center Point - TCP).
The method of operation of protection zones and working area limitations varies correspondingly.

24400	TRAFO_TYPE_4			C07	M1
-	Definition of the 4th transformation in the channel			DWORD	NEW CONF
-					
-	-	0,0,0,0,0,0,0,0,0,0,0,0,0,0,0,0	-	-	-1/7

Description: This MD states the fourth available transformation in each channel.
Same as TRAFO_TYPE_1, but for the fourth available transformation in the channel.
References:
/FB/, F2, "5-Axis Transformation"

24410	TRAFO_AXES_IN_4			C07	F2,M1
-	Axis assignment for the 4th transformation in the channel			BYTE	NEW CONF
-					
802d-cu3	6	1, 2, 3, 4, 5, 0, 0, 0, 0, 0, 0, 0, 0, 0, 0, 0, 0, 0, 0, 0, 0, 0, 0...	0	20	-1/7
802d-ng2	6	1, 2, 3, 4, 5, 0, 0, 0, 0, 0, 0, 0, 0, 0, 0, 0, 0, 0, 0, 0, 0, 0, 0...	0	20	-1/7
802d-ng3	6	1, 2, 3, 4, 5, 0, 0, 0, 0, 0, 0, 0, 0, 0, 0, 0, 0, 0, 0, 0, 0, 0, 0...	0	20	-1/7
802d-tm1	4	1, 2, 3, 4, 5, 0, 0, 0, 0, 0, 0, 0, 0, 0, 0, 0, 0, 0, 0, 0, 0, 0, 0...	0	20	-1/7
802d-tm2	6	1, 2, 3, 4, 5, 0, 0, 0, 0, 0, 0, 0, 0, 0, 0, 0, 0, 0, 0, 0, 0, 0, 0...	0	20	-1/7
802d-tm3	6	1, 2, 3, 4, 5, 0, 0, 0, 0, 0, 0, 0, 0, 0, 0, 0, 0, 0, 0, 0, 0, 0, 0...	0	20	-1/7

Description: Axis assignment at the input point of the 4th transformation in the channel.
Meaning is the same as TRAFO_AXES_IN_1, but for the fourth available transformation in the channel.

24420	TRAFO_GEOAX_ASSIGN_TAB_4			C07	M1
-	Assignment of geometry axes to channel axes for transformation 4			BYTE	NEW CONF
-					
-	3	0, 0, 0,0, 0, 0,0, 0, 0,0, 0, 0...	0	20	-1/7

Description: This MD states the channel axes on which the axes of the cartesian coordinate system are mapped for active transformation 4.
Otherwise the meaning corresponds to TRAFO_GEOAX_ASSIGN_TAB_1.

24426	TRAFO_INCLUDES_TOOL_4			C07	-
-	Tool handling with active 4th transformation			BOOLEAN	NEW CONF
-					
-	-	TRUE,TRUE,TRUE,TRUE,TRUE,TRUE,TRUE...	-	-	-1/7

Description: This machine data states for each channel whether the tool is handled during the 4th transformation or externally.
This machine data is evaluated only with specific transformations.
It is evaluated on the condition that the orientation of the tool with reference to to the Basic Coordinate System cannot be changed by the transformation. In standard transformations, only "inclined-axis transformation" fulfills this condition.
If this machine data is set, the Basic Coordinate System (BCS) refers to the tool reference point even with active transformations. Otherwise, it refers to the tool tip (Tool Center Point - TCP).
The method of operation of protection zones and working area limitations varies correspondingly.

24430	TRAFO_TYPE_5			C07	M1
-	Type of transformation 5 in the channel			DWORD	NEW CONF
-					
-	-	0,0,0,0,0,0,0,0,0,0,0,0,0,0,0,0	-	-	-1/7

Description: Type of transformation available as the fifth in the channel. See MD24100 $MC_TRAFO_TYPE_1 for explanation.

24432	TRAFO_AXES_IN_5			C07	F2
-	Axis assignment for transformation 5			BYTE	NEW CONF
-					
802d-cu3	6	1, 2, 3, 4, 5, 0, 0, 0, 0, 0, 0, 0, 0, 0, 0, 0, 0, 0, 0, 0...	0	20	-1/7
802d-ng2	6	1, 2, 3, 4, 5, 0, 0, 0, 0, 0, 0, 0, 0, 0, 0, 0, 0, 0, 0, 0...	0	20	-1/7
802d-ng3	6	1, 2, 3, 4, 5, 0, 0, 0, 0, 0, 0, 0, 0, 0, 0, 0, 0, 0, 0, 0...	0	20	-1/7
802d-tm1	4	1, 2, 3, 4, 5, 0, 0, 0, 0, 0, 0, 0, 0, 0, 0, 0, 0, 0, 0, 0...	0	20	-1/7
802d-tm2	6	1, 2, 3, 4, 5, 0, 0, 0, 0, 0, 0, 0, 0, 0, 0, 0, 0, 0, 0, 0...	0	20	-1/7
802d-tm3	6	1, 2, 3, 4, 5, 0, 0, 0, 0, 0, 0, 0, 0, 0, 0, 0, 0, 0, 0, 0...	0	20	-1/7

Description: Axis assignment at the input point of the 5th transformation. See TRAFO_AXES_IN_1 for explanation.

24434	TRAFO_GEOAX_ASSIGN_TAB_5			C07	M1
-	Assignment of geometry axes to channel axes for transformation 5			BYTE	NEW CONF
-					
-	3	0, 0, 0,0, 0, 0,0, 0, 0,0, 0, 0...	0	20	-1/7

Description: This MD states the channel axes on which the axes of the cartesian coordinate system are mapped for active transformation 5.
Otherwise the meaning corresponds to TRAFO_GEOAX_ASSIGN_TAB_1.

24436	TRAFO_INCLUDES_TOOL_5			C07	-
-	Tool handling with active 5th transformation			BOOLEAN	NEW CONF
-					
-	-	TRUE,TRUE,TRUE,TRUE,TRUE,TRUE,TRUE...	-	-	-1/7

Description: This machine data states for each channel whether the tool is handled during the 5th transformation or externally.
This machine data is evaluated only with specific transformations.
It is evaluated on the condition that the orientation of the tool with reference to the Basic Coordinate System cannot be changed by the transformation. In standard transformations, only "inclined-axis transformation" fulfills this condition.
If this machine data is set, the Basic Coordinate System (BCS) refers to the tool reference point even with active transformations. Otherwise, it refers to the tool tip (Tool Center Point - TCP).
The method of operation of protection zones and working area limitations varies correspondingly.

24440	TRAFO_TYPE_6			C07	-
-	Type of transformation 6 in the channel			DWORD	NEW CONF
-					
-	-	0,0,0,0,0,0,0,0,0,0,0,0,0,0,0,0	-	-	-1/7

Description: Type of transformation available as the sixth in the channel. See MD24100 $MC_TRAFO_TYPE_1 for explanation.

24442	TRAFO_AXES_IN_6			C07	-
-	Axis assignment for transformation 6			BYTE	NEW CONF
-					
802d-cu3	6	1, 2, 3, 4, 5, 0, 0, 0, 0, 0, 0, 0, 0, 0, 0, 0, 0, 0, 0, 0, 0, 0, 0...	0	20	-1/7
802d-ng2	6	1, 2, 3, 4, 5, 0, 0, 0, 0, 0, 0, 0, 0, 0, 0, 0, 0, 0, 0, 0, 0, 0, 0...	0	20	-1/7
802d-ng3	6	1, 2, 3, 4, 5, 0, 0, 0, 0, 0, 0, 0, 0, 0, 0, 0, 0, 0, 0, 0, 0, 0, 0...	0	20	-1/7
802d-tm1	4	1, 2, 3, 4, 5, 0, 0, 0, 0, 0, 0, 0, 0, 0, 0, 0, 0, 0, 0, 0, 0, 0, 0...	0	20	-1/7
802d-tm2	6	1, 2, 3, 4, 5, 0, 0, 0, 0, 0, 0, 0, 0, 0, 0, 0, 0, 0, 0, 0, 0, 0, 0...	0	20	-1/7
802d-tm3	6	1, 2, 3, 4, 5, 0, 0, 0, 0, 0, 0, 0, 0, 0, 0, 0, 0, 0, 0, 0, 0, 0, 0...	0	20	-1/7

Description: Axis assignment at the input point of the 6th transformation. See TRAFO_AXES_IN_1 for explanation.

24444	TRAFO_GEOAX_ASSIGN_TAB_6			C07	-
-	Assignment of geometry axes to channel axes for transformation 6			BYTE	NEW CONF
-					
-	3	0, 0, 0,0, 0, 0,0, 0, 0,0, 0, 0...	0	20	-1/7

Description: This MD states the channel axes on which the axes of the cartesian coordinate system are mapped for active transformation 6.
Otherwise the meaning corresponds to TRAFO_GEOAX_ASSIGN_TAB_1.

24446	TRAFO_INCLUDES_TOOL_6			C07	-
-	Tool handling with active 6th transformation			BOOLEAN	NEW CONF
-					
-	-	TRUE,TRUE,TRUE,TRUE,TRUE,TRUE,TRUE...	-	-	-1/7

Description: This machine data states for each channel whether the tool is handled during the 6th transformation or externally.
This machine data is evaluated only with specific transformations.
It is evaluated on the condition that the orientation of the tool with reference to the Basic Coordinate System cannot be changed by the transformation. In standard transformations, only "inclined-axis transformation" fulfills this condition.
If this machine data is set, the Basic Coordinate System (BCS) refers to the tool reference point even with active transformations. Otherwise, it refers to the tool tip (Tool Center Point - TCP).
The method of operation of protection zones and working area limitations varies correspondingly.

24450	TRAFO_TYPE_7			C07	-
-	Type of transformation 7 in the channel			DWORD	NEW CONF
-					
-	-	0,0,0,0,0,0,0,0,0,0,0,0,0,0,0,0	-	-	-1/7

Description: Type of transformation available as the seventh in the channel. See MD24100 $MC_TRAFO_TYPE_1 for explanation.

24452	TRAFO_AXES_IN_7			C07	-
-	Axis assignment for transformation 7			BYTE	NEW CONF
-					
802d-cu3	6	1, 2, 3, 4, 5, 0, 0, 0, 0, 0, 0, 0, 0, 0, 0, 0, 0, 0, 0, 0, 0, 0, 0...	0	20	-1/7
802d-ng2	6	1, 2, 3, 4, 5, 0, 0, 0, 0, 0, 0, 0, 0, 0, 0, 0, 0, 0, 0, 0, 0, 0, 0...	0	20	-1/7
802d-ng3	6	1, 2, 3, 4, 5, 0, 0, 0, 0, 0, 0, 0, 0, 0, 0, 0, 0, 0, 0, 0, 0, 0, 0...	0	20	-1/7
802d-tm1	4	1, 2, 3, 4, 5, 0, 0, 0, 0, 0, 0, 0, 0, 0, 0, 0, 0, 0, 0, 0, 0, 0, 0...	0	20	-1/7
802d-tm2	6	1, 2, 3, 4, 5, 0, 0, 0, 0, 0, 0, 0, 0, 0, 0, 0, 0, 0, 0, 0, 0, 0, 0...	0	20	-1/7
802d-tm3	6	1, 2, 3, 4, 5, 0, 0, 0, 0, 0, 0, 0, 0, 0, 0, 0, 0, 0, 0, 0, 0, 0, 0...	0	20	-1/7

Description: Axis assignment at the input point of the 7th transformation. See TRAFO_AXES_IN_1 for explanation.

24454	TRAFO_GEOAX_ASSIGN_TAB_7			C07	-
-	Assignment of geometry axes to channel axes for transformation 7			BYTE	NEW CONF
-					
-	3	0, 0, 0,0, 0, 0,0, 0, 0,0, 0, 0...	0	20	-1/7

Description: This MD states the channel axes on which the axes of the cartesian coordinate system are mapped for active transformation 7.
Otherwise the meaning corresponds to TRAFO_GEOAX_ASSIGN_TAB_1.

24456	TRAFO_INCLUDES_TOOL_7			C07	-
-	Tool handling with active 7th transformation			BOOLEAN	NEW CONF
-					
-	-	TRUE,TRUE,TRUE,TRUE,TRUE,TRUE,TRUE...	-	-	-1/7

Description: This machine data states for each channel whether the tool is handled during the 7th transformation or externally.
This machine data is evaluated only with specific transformations.
It is evaluated on the condition that the orientation of the tool with reference to the Basic Coordinate System cannot be changed by the transformation. In standard transformations, only "inclined-axis transformation" fulfills this condition.
If this machine data is set, the Basic Coordinate System (BCS) refers to the tool reference point even with active transformations. Otherwise, it refers to the tool tip (Tool Center Point - TCP).
The method of operation of protection zones and working area limitations varies correspondingly.

24460	TRAFO_TYPE_8			C07	F2,TE4,M1
-	Type of transformation 8 in the channel			DWORD	NEW CONF
-					
-	-	0,0,0,0,0,0,0,0,0,0,0,0,0,0,0,0	-	-	-1/7

Description: Type of transformation available as the eighth in the channel. See MD24100 $MC_TRAFO_TYPE_1 for explanation.

24462	TRAFO_AXES_IN_8			C07	F2
-	Axis assignment for transformation 8			BYTE	NEW CONF
-					
802d-cu3	6	1, 2, 3, 4, 5, 0, 0, 0, 0, 0, 0, 0, 0, 0, 0, 0, 0, 0, 0, 0...	0	20	-1/7
802d-ng2	6	1, 2, 3, 4, 5, 0, 0, 0, 0, 0, 0, 0, 0, 0, 0, 0, 0, 0, 0, 0...	0	20	-1/7
802d-ng3	6	1, 2, 3, 4, 5, 0, 0, 0, 0, 0, 0, 0, 0, 0, 0, 0, 0, 0, 0, 0...	0	20	-1/7
802d-tm1	4	1, 2, 3, 4, 5, 0, 0, 0, 0, 0, 0, 0, 0, 0, 0, 0, 0, 0, 0, 0...	0	20	-1/7
802d-tm2	6	1, 2, 3, 4, 5, 0, 0, 0, 0, 0, 0, 0, 0, 0, 0, 0, 0, 0, 0, 0...	0	20	-1/7
802d-tm3	6	1, 2, 3, 4, 5, 0, 0, 0, 0, 0, 0, 0, 0, 0, 0, 0, 0, 0, 0, 0...	0	20	-1/7

Description: Axis assignment at the input point of the 8th transformation. See TRAFO_AXES_IN_1 for explanation.

24464	TRAFO_GEOAX_ASSIGN_TAB_8			C07	-
-	Assignment of geometry axes to channel axes for transformation 8			BYTE	NEW CONF
-					
-	3	0, 0, 0,0, 0, 0,0, 0, 0,0, 0, 0...	0	20	-1/7

Description: This MD states the channel axes on which the axes of the cartesian coordinate system are mapped for active transformation 8.
Otherwise the meaning corresponds to TRAFO_GEOAX_ASSIGN_TAB_1.

24466	TRAFO_INCLUDES_TOOL_8			C07	-
-	Tool handling with 8th active transformation			BOOLEAN	NEW CONF
-					
-	-	TRUE,TRUE,TRUE,TRUE,TRUE,TRUE,TRUE...	-	-	-1/7

Description: This machine data states for each channel whether the tool is handled during the 8th transformation or externally.
This machine data is evaluated only with specific transformations.
It is evaluated on the condition that the orientation of the tool with reference to the Basic Coordinate System cannot be changed by the transformation. In standard transformations, only "inclined-axis transformation" fulfills this condition.
If this machine data is set, the Basic Coordinate System (BCS) refers to the tool reference point even with active transformations. Otherwise, it refers to the tool tip (Tool Center Point - TCP).
The method of operation of protection zones and working area limitations varies correspondingly.

24470	TRAFO_TYPE_9			C07	M1
-	Type of transformation 9 in the channel			DWORD	NEW CONF
-					
-	-	0,0,0,0,0,0,0,0,0,0,0,0,0,0,0,0	-	-	-1/7

Description: Type of transformation available as the ninth in the channel. See MD24100 $MC_TRAFO_TYPE_1 for explanation.

24472	TRAFO_AXES_IN_9			C07	-
-	Axis assignment for transformation 9			BYTE	NEW CONF
-					
802d-cu3	6	1, 2, 3, 4, 5, 0, 0, 0, 0, 0, 0, 0, 0, 0, 0, 0, 0, 0, 0, 0, 0, 0, 0, 0, 0...	0	20	-1/7
802d-ng2	6	1, 2, 3, 4, 5, 0, 0, 0, 0, 0, 0, 0, 0, 0, 0, 0, 0, 0, 0, 0, 0, 0, 0, 0, 0...	0	20	-1/7
802d-ng3	6	1, 2, 3, 4, 5, 0, 0, 0, 0, 0, 0, 0, 0, 0, 0, 0, 0, 0, 0, 0, 0, 0, 0, 0, 0...	0	20	-1/7
802d-tm1	4	1, 2, 3, 4, 5, 0, 0, 0, 0, 0, 0, 0, 0, 0, 0, 0, 0, 0, 0, 0, 0, 0, 0, 0, 0...	0	20	-1/7
802d-tm2	6	1, 2, 3, 4, 5, 0, 0, 0, 0, 0, 0, 0, 0, 0, 0, 0, 0, 0, 0, 0, 0, 0, 0, 0, 0...	0	20	-1/7
802d-tm3	6	1, 2, 3, 4, 5, 0, 0, 0, 0, 0, 0, 0, 0, 0, 0, 0, 0, 0, 0, 0, 0, 0, 0, 0, 0...	0	20	-1/7

Description: Axis assignment at the input point of the 9th transformation. See TRAFO_AXES_IN_1 for explanation.

24474	TRAFO_GEOAX_ASSIGN_TAB_9			C07	-
-	Assignment of geometry axes to channel axes for transformation 9			BYTE	NEW CONF
-					
-	3	0, 0, 0,0, 0, 0,0, 0, 0,0, 0, 0,0, 0...	0	20	-1/7

Description: This MD states the channel axes on which the axes of the cartesian coordinate system are mapped for active transformation 9.

24476	TRAFO_INCLUDES_TOOL_9			C07	-
-	Treatment of tool with active 9th transformation			BOOLEAN	NEW CONF
-					
-	-	TRUE,TRUE,TRUE,TRUE,TRUE,TRUE,TRUE,TRUE...	-	-	-1/7

Description: Same as TRAFO_INCLUDES_TOOL_1, but for the 9th transformation.

24480	TRAFO_TYPE_10			C07	F2,M1
-	Transformation 10 in channel			DWORD	NEW CONF
-					
-	-	0,0,0,0,0,0,0,0,0,0,0,0,0,0,0,0	-	-	-1/7

Description: Same as TRAFO_TYPE_1, but for the tenth available transformation in the channel.

24482	TRAFO_AXES_IN_10			C07	F2,M1
-	Axis assignment for transformation 10			BYTE	NEW CONF
-					
802d-cu3	6	1, 2, 3, 4, 5, 0, 0, 0, 0, 0, 0, 0, 0, 0, 0, 0, 0, 0, 0, 0, 0...	0	20	-1/7
802d-ng2	6	1, 2, 3, 4, 5, 0, 0, 0, 0, 0, 0, 0, 0, 0, 0, 0, 0, 0, 0, 0, 0...	0	20	-1/7
802d-ng3	6	1, 2, 3, 4, 5, 0, 0, 0, 0, 0, 0, 0, 0, 0, 0, 0, 0, 0, 0, 0, 0...	0	20	-1/7
802d-tm1	4	1, 2, 3, 4, 5, 0, 0, 0, 0, 0, 0, 0, 0, 0, 0, 0, 0, 0, 0, 0, 0...	0	20	-1/7
802d-tm2	6	1, 2, 3, 4, 5, 0, 0, 0, 0, 0, 0, 0, 0, 0, 0, 0, 0, 0, 0, 0, 0...	0	20	-1/7
802d-tm3	6	1, 2, 3, 4, 5, 0, 0, 0, 0, 0, 0, 0, 0, 0, 0, 0, 0, 0, 0, 0, 0...	0	20	-1/7

Description: Axis assignment at the input of the 10th transformation. See TRAFO_AXES_IN_1 for explanation.

24484	TRAFO_GEOAX_ASSIGN_TAB_10			C07	M1
-	Assignment of geometry axes to channel axes f. transformation 10			BYTE	NEW CONF
-					
-	3	0, 0, 0,0, 0, 0,0, 0, 0,0, 0, 0...	0	20	-1/7

Description: Assignment table of geometry axes with transformation 10
Same as AXCONF_GEOAX_ASSIGN_TAB, but only effective when transformation 10 is active.

24486	TRAFO_INCLUDES_TOOL_10			C07	-
-	Treatment of tool with active 10th transformation			BOOLEAN	NEW CONF
-					
-	-	TRUE,TRUE,TRUE,TRUE,TRUE,TRUE,TRUE,TRUE...	-	-	-1/7

Description: Same as TRAFO_INCLUDES_TOOL_1, but for the 10th transformation.

24561	TRAFO6_JOINT_OFFSET_2_3_1			C07	F2
mm	Vector of kinematic offset			DOUBLE	NEW CONF
-					
-	3	0.0, 0.0 , 0.0,0.0, 0.0 , 0.0...	-	-	-1/7

Description: In the case of 6-axis transformations, defines the offset between the 2nd and third rotary axes for the 1st transformation of each channel.

24573	TRAFO5_AXIS3_1			C07	F2
-	Direction of the 3rd rotary axis			DOUBLE	NEW CONF
-					
-	3	0.0, 0.0 , 0.0,0.0, 0.0 , 0.0...	-	-	-1/7

Description: Indicates the vector which defines the direction of the third rotary axis in the case of the general 6-axis transformation (TRAFO_TYPE_* = 24, 40, 56, 57).
The vector may have any value except zero.
Example:
The same axis is defined with both (0, 1, 0) and (0, 7.21, 0) (in the direction of the 2nd geometry axis, that is as a rule Y).
Valid for the first orientation transformation of a channel.

24576	TRAFO6_BASE_ORIENT_NORMAL_1			C07	F2
-	Normal tool vector in 6-axis transformation			DOUBLE	NEW CONF
-					
-	3	0.0, 1.0 , 0.0,0.0, 1.0 , 0.0...	-	-	-1/7

Description: Indicates a vector that is perpendicular to the tool orientation (TRAFO5_BASE_ORIENTATION_1) in the case of the general 6-axis transformation (TRAFO_TYPE_* = 24, 40, 56, 57).
If TRAFO6_BASE_ORIENT_NORMAL_1 and TRAFO5_BASE_ORIENTATION_1 are neither orthogonal nor parallel, then the two vectors are orthogonalized by modifying the normal vector.The two vectors must not be parallel.
The vector may have any value other than zero.
Valid for the first orientation transformation of a channel.

24661	TRAFO6_JOINT_OFFSET_2_3_2			C07	-
mm	Vector of kinematic offset			DOUBLE	NEW CONF
-					
-	3	0.0, 0.0 , 0.0,0.0, 0.0 , 0.0...	-	-	-1/7

Description: As TRAFO6_JOINT_OFFSET_2_3_1 but for the second transformation.

24673	TRAFO5_AXIS3_2			C07	-
-	Direction of the 3rd rotary axis			DOUBLE	NEW CONF
-					
-	3	0.0, 0.0 , 0.0,0.0, 0.0 , 0.0...	-	-	-1/7

Description: As TRAFO5_AXIS3_1 but for the second orientation transformation of a channel.

24676	TRAFO6_BASE_ORIENT_NORMAL_2			C07	-
-	Normal tool vector			DOUBLE	NEW CONF
-					
-	3	0.0, 1.0 , 0.0,0.0, 1.0 , 0.0...	-	-	-1/7

Description: As TRAFO6_BASE_ORIENT_NORMAL_1 but for the second orientation transformation

24700	TRAANG_ANGLE_1			C07	M1
degrees	Angle between Cartesian axis and real (inclined) axis			DOUBLE	NEW CONF
-					
802d-cu3	-	0.0,0.0,0.0,0.0,0.0,0.0,0.0, 0.0,0.0,0.0...	-	-	2/2
802d-ng2	-	0.0,0.0,0.0,0.0,0.0,0.0,0.0, 0.0,0.0,0.0...	-	-	2/2
802d-ng3	-	0.0,0.0,0.0,0.0,0.0,0.0,0.0, 0.0,0.0,0.0...	-	-	2/2
802d-tm1	-	0.0,0.0,0.0,0.0,0.0,0.0,0.0, 0.0,0.0,0.0...	-	-	-1/7
802d-tm2	-	0.0,0.0,0.0,0.0,0.0,0.0,0.0, 0.0,0.0,0.0...	-	-	-1/7
802d-tm3	-	0.0,0.0,0.0,0.0,0.0,0.0,0.0, 0.0,0.0,0.0...	-	-	-1/7

Description: Indicates for the first agreed TRAANG transformation of the channel the angle of the inclined axis in degrees between the 1st machine axis and the 1st basic axis while TRAANG is active. The angle is measured positively clock-wise.

Related to:

MD24750 $MC_TRAANG_ANGLE_2

24710	TRAANG_BASE_TOOL_1			C07	M1
mm	Vector of base tool for 1st TRAANG transformation			DOUBLE	NEW CONF
-					
802d-cu3	3	0.0, 0.0 , 0.0,0.0, 0.0 , 0.0...	-	-	2/2
802d-ng2	3	0.0, 0.0 , 0.0,0.0, 0.0 , 0.0...	-	-	2/2
802d-ng3	3	0.0, 0.0 , 0.0,0.0, 0.0 , 0.0...	-	-	2/2
802d-tm1	3	0.0, 0.0 , 0.0,0.0, 0.0 , 0.0...	-	-	-1/7
802d-tm2	3	0.0, 0.0 , 0.0,0.0, 0.0 , 0.0...	-	-	-1/7
802d-tm3	3	0.0, 0.0 , 0.0,0.0, 0.0 , 0.0...	-	-	-1/7

Description: Indicates a basic offset of the tools zero for the 1st TRAANG transformation. The offset is referenced to the geometry axes valid when TRAANG is active. The basic offset is included with and without selection of the tool length compensation. Programmed length corrections have an additive effect with respect to the basic tool.

The index i takes the values 0, 1, 2 for the 1st to 3rd geometry axes.

Related to:

MD24760 $MC_TRAANG_BASE_TOOL_2

24720	TRAANG_PARALLEL_VELO_RES_1			C07	M1
-	Velocity margin for 1st TRAANG transformation			DOUBLE	NEW CONF
-					
802d-cu3	-	0.0,0.0,0.0,0.0,0.0,0.0,0.0, 0.0,0.0,0.0...	0.0	1.0	2/2
802d-ng2	-	0.0,0.0,0.0,0.0,0.0,0.0,0.0, 0.0,0.0,0.0...	0.0	1.0	2/2
802d-ng3	-	0.0,0.0,0.0,0.0,0.0,0.0,0.0, 0.0,0.0,0.0...	0.0	1.0	2/2
802d-tm1	-	0.0,0.0,0.0,0.0,0.0,0.0,0.0, 0.0,0.0,0.0...	0.0	1.0	-1/7
802d-tm2	-	0.0,0.0,0.0,0.0,0.0,0.0,0.0, 0.0,0.0,0.0...	0.0	1.0	-1/7
802d-tm3	-	0.0,0.0,0.0,0.0,0.0,0.0,0.0, 0.0,0.0,0.0...	0.0	1.0	-1/7

Description: Indicates the axis velocity reserve for jog, positioning and oscillating movements for each channel for the first TRAANG transformation which is held ready on the parallel axis (see MD2.... $MC_TRAFO_AXES_IN_...[1]) for the compensating movement.

Velocity reserve to be provided for jog, positioning and oscillating movements on the parallel axis to handle the compensating movement as a consequence of the inclined axis.

0.0 means that the control or the transformation itself determines the reserve according to the angle of the inclined axis and the velocity capacity of the inclined and parallel axes. - The criterion for this is that the same velocity limit has to be maintained in the direction of the parallel axis and the (virtual) axis at right-angles to it.

>0.0 means that a fixed reserve has been set (MD24720 $MC_TRAANG_PARALLEL_VELO_RES_1 * MD32000 $MA_MAX_AX_VELO of the parallel axis). The velocity capacity in the virtual axis is determined by this. The lower MD24720 $MC_TRAANG_PARALLEL_VELO_RES_1 has been set, the lower it is

Related to:

MD24771 $MC_TRAANG_PARALLEL_ACCEL_RES_2

24721	TRAANG_PARALLEL_ACCEL_RES_1			C07	M1
-	Acceleration margin of parallel axis for the 1st TRAANG transf.			DOUBLE	NEW CONF
-					
802d-cu3	-	0.0,0.0,0.0,0.0,0.0,0.0, 0.0,0.0,0.0...	0.0	1.0	2/2
802d-ng2	-	0.0,0.0,0.0,0.0,0.0,0.0, 0.0,0.0,0.0...	0.0	1.0	2/2
802d-ng3	-	0.0,0.0,0.0,0.0,0.0,0.0, 0.0,0.0,0.0...	0.0	1.0	2/2
802d-tm1	-	0.0,0.0,0.0,0.0,0.0,0.0, 0.0,0.0,0.0...	0.0	1.0	-1/7
802d-tm2	-	0.0,0.0,0.0,0.0,0.0,0.0, 0.0,0.0,0.0...	0.0	1.0	-1/7
802d-tm3	-	0.0,0.0,0.0,0.0,0.0,0.0, 0.0,0.0,0.0...	0.0	1.0	-1/7

Description: Indicates the acceleration margin for jog, positioning and oscillating movements for each channel for the first TRAANG transformation which is held ready on the parallel axis (see MD2.... $MC_TRAFO_AXES_IN_...[1]) for the compensating movement.

Related to:

MD24720 $MC_TRAANG_PARALLEL_VELO_RES_1

24750	TRAANG_ANGLE_2			C07	M1
degrees	Angle between Cartesian axis and real (inclined) axis			DOUBLE	NEW CONF
-					
802d-cu3	-	0.0,0.0,0.0,0.0,0.0,0.0, 0.0,0.0,0.0...	-	-	2/2
802d-ng2	-	0.0,0.0,0.0,0.0,0.0,0.0, 0.0,0.0,0.0...	-	-	2/2
802d-ng3	-	0.0,0.0,0.0,0.0,0.0,0.0, 0.0,0.0,0.0...	-	-	2/2
802d-tm1	-	0.0,0.0,0.0,0.0,0.0,0.0, 0.0,0.0,0.0...	-	-	-1/7
802d-tm2	-	0.0,0.0,0.0,0.0,0.0,0.0, 0.0,0.0,0.0...	-	-	-1/7
802d-tm3	-	0.0,0.0,0.0,0.0,0.0,0.0, 0.0,0.0,0.0...	-	-	-1/7

Description: Indicates for the second agreed TRAANG transformation of the channel the angle of the inclined axis in degrees between the 1st machine axis and the 1st basic axis while TRAANG is active. The angle is measured positively clockwise.

Related to:

MD24700 $MC_TRAANG_ANGLE_1

24760	TRAANG_BASE_TOOL_2			C07	M1
mm	Vector of base tool for 2nd TRAANG transformation			DOUBLE	NEW CONF
-					
802d-cu3	3	0.0, 0.0 , 0.0,0.0, 0.0 , 0.0...	-	-	2/2
802d-ng2	3	0.0, 0.0 , 0.0,0.0, 0.0 , 0.0...	-	-	2/2
802d-ng3	3	0.0, 0.0 , 0.0,0.0, 0.0 , 0.0...	-	-	2/2
802d-tm1	3	0.0, 0.0 , 0.0,0.0, 0.0 , 0.0...	-	-	-1/7
802d-tm2	3	0.0, 0.0 , 0.0,0.0, 0.0 , 0.0...	-	-	-1/7
802d-tm3	3	0.0, 0.0 , 0.0,0.0, 0.0 , 0.0...	-	-	-1/7

Description: Indicates a basic offset of the tools zero for the 2nd TRAANG transformation. The offset is referenced to the geometry axes valid when TRAANG is active. The basic offset is included with and without selection of the tool length compensation. Programmed length corrections have an additive effect with respect to the basic tool.
The index i takes the values 0, 1, 2 for the 1st to 3rd geometry axes.
Related to:
MD24710 $MC_TRAANG_BASE_TOOL_1

24770	TRAANG_PARALLEL_VELO_RES_2			C07	M1
-	Velocity margin for 2nd TRAANG transformation			DOUBLE	NEW CONF
-					
802d-cu3	-	0.0,0.0,0.0,0.0,0.0,0.0, 0.0,0.0,0.0,0.0...	0.0	1.0	2/2
802d-ng2	-	0.0,0.0,0.0,0.0,0.0,0.0, 0.0,0.0,0.0,0.0...	0.0	1.0	2/2
802d-ng3	-	0.0,0.0,0.0,0.0,0.0,0.0, 0.0,0.0,0.0,0.0...	0.0	1.0	2/2
802d-tm1	-	0.0,0.0,0.0,0.0,0.0,0.0, 0.0,0.0,0.0,0.0...	0.0	1.0	-1/7
802d-tm2	-	0.0,0.0,0.0,0.0,0.0,0.0, 0.0,0.0,0.0,0.0...	0.0	1.0	-1/7
802d-tm3	-	0.0,0.0,0.0,0.0,0.0,0.0, 0.0,0.0,0.0,0.0...	0.0	1.0	-1/7

Description: Indicates the axis velocity reserve for jog, positioning and oscillating movements for each channel for the second TRAANG transformation which is held ready on the parallel axis (see MD2.... $MC_TRAFO_AXES_IN_...[1]) for the compensating movement.
Related to:
MD24771 $MC_TRAANG_PARALLEL_ACCEL_RES_2

24771	TRAANG_PARALLEL_ACCEL_RES_2			C07	M1
-	Acceler. margin of parallel axis for the 2nd TRAANG transform.			DOUBLE	NEW CONF
-					
802d-cu3	-	0.0,0.0,0.0,0.0,0.0,0.0,0.0,0.0,0.0,0.0...	0.0	1.0	2/2
802d-ng2	-	0.0,0.0,0.0,0.0,0.0,0.0,0.0,0.0,0.0,0.0...	0.0	1.0	2/2
802d-ng3	-	0.0,0.0,0.0,0.0,0.0,0.0,0.0,0.0,0.0,0.0...	0.0	1.0	2/2
802d-tm1	-	0.0,0.0,0.0,0.0,0.0,0.0,0.0,0.0,0.0,0.0...	0.0	1.0	-1/7
802d-tm2	-	0.0,0.0,0.0,0.0,0.0,0.0,0.0,0.0,0.0,0.0...	0.0	1.0	-1/7
802d-tm3	-	0.0,0.0,0.0,0.0,0.0,0.0,0.0,0.0,0.0,0.0...	0.0	1.0	-1/7

Description: Indicates the axis acceleration margin for jog, positioning and oscillating movements which is held ready on the parallel axis (see MD2.... $MC_TRAFO_AXES_IN_...[1]) for the compensatory movement; MD setting applies to the second TRAANG transformation for each channel.

Related to:

$MC_TRAANG_PARALLEL_RES_1

24800	TRACYL_ROT_AX_OFFSET_1			C07	M1,K2
degrees	Offset of rotary axis for the 1st TRACYL transformation			DOUBLE	NEW CONF
-					
802d-cu3	-	0.0,0.0,0.0,0.0,0.0,0.0,0.0,0.0,0.0,0.0...	-	-	2/2
802d-ng2	-	0.0,0.0,0.0,0.0,0.0,0.0,0.0,0.0,0.0,0.0...	-	-	-1/7
802d-ng3	-	0.0,0.0,0.0,0.0,0.0,0.0,0.0,0.0,0.0,0.0...	-	-	-1/7
802d-tm1	-	0.0,0.0,0.0,0.0,0.0,0.0,0.0,0.0,0.0,0.0...	-	-	0/0
802d-tm2	-	0.0,0.0,0.0,0.0,0.0,0.0,0.0,0.0,0.0,0.0...	-	-	2/2
802d-tm3	-	0.0,0.0,0.0,0.0,0.0,0.0,0.0,0.0,0.0,0.0...	-	-	2/2

Description: Indicates the offset of the rotary axis for the first agreed TRACYL transformation in degrees in relation to the neutral position while TRACYL is active.

Related to:

MD24850 $MC_TRACYL_ROT_AX_OFFSET_2

24805	TRACYL_ROT_AX_FRAME_1			C07	M1
-	Rotary axis offset TRACYL 1			BYTE	NEW CONF
-					
802d-cu3	-	0,0,0,0,0,0,0,0,0,0,0,0,0,0,0,0	0	2	2/2
802d-ng2	-	0,0,0,0,0,0,0,0,0,0,0,0,0,0,0,0	0	2	-1/7
802d-ng3	-	0,0,0,0,0,0,0,0,0,0,0,0,0,0,0,0	0	2	-1/7
802d-tm1	-	0,0,0,0,0,0,0,0,0,0,0,0,0,0,0,0	0	2	0/0
802d-tm2	-	0,0,0,0,0,0,0,0,0,0,0,0,0,0,0,0	0	2	2/2
802d-tm3	-	0,0,0,0,0,0,0,0,0,0,0,0,0,0,0,0	0	2	2/2

Description:

0: axial rotary axis offset is not considered.
1: axial rotary axis offset is considered.
2: axial rotary axis offset is considered until SZS.
SZS frames include transformed axial rotary axis offsets.

24808	TRACYL_DEFAULT_MODE_1			C07	M1
-	TRACYL mode selection			BYTE	NEW CONF
-					
802d-cu3	-	0,0,0,0,0,0,0,0,0,0,0,0,0,0,0,0	0	1	2/2
802d-ng2	-	0,0,0,0,0,0,0,0,0,0,0,0,0,0,0,0	0	1	-1/7
802d-ng3	-	0,0,0,0,0,0,0,0,0,0,0,0,0,0,0,0	0	1	-1/7
802d-tm1	-	0,0,0,0,0,0,0,0,0,0,0,0,0,0,0,0	0	1	0/0
802d-tm2	-	0,0,0,0,0,0,0,0,0,0,0,0,0,0,0,0	0	1	2/2
802d-tm3	-	0,0,0,0,0,0,0,0,0,0,0,0,0,0,0,0	0	1	2/2

Description:

Default setting of TRACYL type 514:
0: without groove side offset (i.e. TRACYL type 514 - equals 512)
1: with groove side offset (i.e. TRACYL type 514 - equals 513)
MD2.... $MC_TRAFO_TYPE_... = 514 can be used to decide, via the selection parameters, whether calculation is made with or without groove side offset. The parameter defines the variable to be selected if no selection is made in the call parameters.
If MD24808 $MC_TRACYL_DEFAULT_MODE_1 = 1, it is sufficient to program TRACYL(30) in the part program instead of TRACYL(30,1,1).

24810	TRACYL_ROT_SIGN_IS_PLUS_1			C07	M1
-	Sign of rotary axis for 1st TRACYL transformation			BOOLEAN	NEW CONF
-					
802d-cu3	-	TRUE,TRUE,TRUE,TRUE,TRUE,TRUE,TRUE...	-	-	2/2
802d-ng2	-	TRUE,TRUE,TRUE,TRUE,TRUE,TRUE,TRUE...	-	-	-1/7
802d-ng3	-	TRUE,TRUE,TRUE,TRUE,TRUE,TRUE,TRUE...	-	-	-1/7
802d-tm1	-	TRUE,TRUE,TRUE,TRUE,TRUE,TRUE,TRUE...	-	-	0/0
802d-tm2	-	TRUE,TRUE,TRUE,TRUE,TRUE,TRUE,TRUE...	-	-	2/2
802d-tm3	-	TRUE,TRUE,TRUE,TRUE,TRUE,TRUE,TRUE...	-	-	2/2

Description: Indicates the sign with which the rotary axis is taken into account in the TRACYL transformation for the first agreed TRACYL transformation.
Related to:
MD24860 $MC_TRACYL_ROT_SIGN_IS_PLUS_2

24820	TRACYL_BASE_TOOL_1			C07	M1
mm	Vector of base tool for 1st TRACYL transformation			DOUBLE	NEW CONF
-					
802d-cu3	3	0.0, 0.0 , 0.0,0.0, 0.0 , 0.0...	-	-	2/2
802d-ng2	3	0.0, 0.0 , 0.0,0.0, 0.0 , 0.0...	-	-	-1/7
802d-ng3	3	0.0, 0.0 , 0.0,0.0, 0.0 , 0.0...	-	-	-1/7
802d-tm1	3	0.0, 0.0 , 0.0,0.0, 0.0 , 0.0...	-	-	0/0
802d-tm2	3	0.0, 0.0 , 0.0,0.0, 0.0 , 0.0...	-	-	2/2
802d-tm3	3	0.0, 0.0 , 0.0,0.0, 0.0 , 0.0...	-	-	2/2

Description: Indicates a basic offset of the tools zero for the 1st TRACYL transformation. The offset is referenced to the geometry axes valid when TRACYL is active. The basic offset is included with and without selection of the tool length compensation. Programmed length corrections have an additive effect with respect to the basic tool.
The index i takes the values 0, 1, 2 for the 1st to 3rd geometry axes.
Related to:
MD24870 $MC_TRACYL_BASE_TOOL_2

24850	TRACYL_ROT_AX_OFFSET_2			C07	M1
degrees	Offset of rotary axis for the 2nd TRACYL transformation			DOUBLE	NEW CONF
-					
802d-cu3	-	0.0,0.0,0.0,0.0,0.0,0.0,0.0, 0.0,0.0,0.0...	-	-	2/2
802d-ng2	-	0.0,0.0,0.0,0.0,0.0,0.0,0.0, 0.0,0.0,0.0...	-	-	-1/7
802d-ng3	-	0.0,0.0,0.0,0.0,0.0,0.0,0.0, 0.0,0.0,0.0...	-	-	-1/7
802d-tm1	-	0.0,0.0,0.0,0.0,0.0,0.0,0.0, 0.0,0.0,0.0...	-	-	0/0
802d-tm2	-	0.0,0.0,0.0,0.0,0.0,0.0,0.0, 0.0,0.0,0.0...	-	-	2/2
802d-tm3	-	0.0,0.0,0.0,0.0,0.0,0.0,0.0, 0.0,0.0,0.0...	-	-	2/2

Description: Indicates the offset of the rotary axis in degrees in relation to the neutral position for the 2nd agreed TRACYL transformation for each channel.

MD irrelevant:

If no TRACYL is active

Related to:

MD24800 $MC_TRACYL_ROT_AX_OFFSET_1

24855	TRACYL_ROT_AX_FRAME_2			C07	M1,K2
-	Rotary axis offset TRACYL 2			BYTE	NEW CONF
-					
802d-cu3	-	0,0,0,0,0,0,0,0,0,0,0, 0,0,0,0	0	2	2/2
802d-ng2	-	0,0,0,0,0,0,0,0,0,0,0, 0,0,0,0	0	2	-1/7
802d-ng3	-	0,0,0,0,0,0,0,0,0,0,0, 0,0,0,0	0	2	-1/7
802d-tm1	-	0,0,0,0,0,0,0,0,0,0,0, 0,0,0,0	0	2	0/0
802d-tm2	-	0,0,0,0,0,0,0,0,0,0,0, 0,0,0,0	0	2	2/2
802d-tm3	-	0,0,0,0,0,0,0,0,0,0,0, 0,0,0,0	0	2	2/2

Description: 0: axial rotary axis offset is not considered.

1: axial rotary axis offset is considered.

2: axial rotary axis offset is considered until SZS.

SZS frames include transformed axial rotary axis offsets.

24858	TRACYL_DEFAULT_MODE_2			C07	M1
-	TRACYL mode selection			BYTE	NEW CONF
-					
802d-cu3	-	0,0,0,0,0,0,0,0,0,0,0,0,0,0,0,0	0	1	2/2
802d-ng2	-	0,0,0,0,0,0,0,0,0,0,0,0,0,0,0,0	0	1	-1/7
802d-ng3	-	0,0,0,0,0,0,0,0,0,0,0,0,0,0,0,0	0	1	-1/7
802d-tm1	-	0,0,0,0,0,0,0,0,0,0,0,0,0,0,0,0	0	1	0/0
802d-tm2	-	0,0,0,0,0,0,0,0,0,0,0,0,0,0,0,0	0	1	2/2
802d-tm3	-	0,0,0,0,0,0,0,0,0,0,0,0,0,0,0,0	0	1	2/2

Description: Default setting of TRACYL type 514 for the 2nd TRACYL:
0: without groove side offset (i.e. TRACYL type 514 - equals 512)
1: with groove side offset (i.e. TRACYL type 514 - equals 513)
MD2.... $MC_TRAFO_TYPE_... = 514 can be used to decide, via the selection parameters, whether calculation is made with or without groove side offset. The parameter defines the variable to be selected if no selection is made in the call parameters.
If MD24858 $MC_TRACYL_DEFAULT_MODE_2 = 1, it is sufficient to program TRACYL(30,2) in the part program instead of TRACYL(30,2,1).

24860	TRACYL_ROT_SIGN_IS_PLUS_2			C07	-
-	Sign of rotary axis for 2nd TRACYL transformation			BOOLEAN	NEW CONF
-					
802d-cu3	-	TRUE,TRUE,TRUE,TRUE,TRUE,TRUE,TRUE...	-	-	2/2
802d-ng2	-	TRUE,TRUE,TRUE,TRUE,TRUE,TRUE,TRUE...	-	-	-1/7
802d-ng3	-	TRUE,TRUE,TRUE,TRUE,TRUE,TRUE,TRUE...	-	-	-1/7
802d-tm1	-	TRUE,TRUE,TRUE,TRUE,TRUE,TRUE,TRUE...	-	-	0/0
802d-tm2	-	TRUE,TRUE,TRUE,TRUE,TRUE,TRUE,TRUE...	-	-	2/2
802d-tm3	-	TRUE,TRUE,TRUE,TRUE,TRUE,TRUE,TRUE...	-	-	2/2

Description: Indicates the sign with which the rotary axis is taken into account in the TRACYL transformation for the 2nd agreed TRACYL transformation for each channel.
Related to:
MD24810 $MC_TRACYL_ROT_SIGN_IS_PLUS_1

24870	TRACYL_BASE_TOOL_2			C07	M1
mm	Vector of base tool for 2nd TRACYL transformation			DOUBLE	NEW CONF
-					
802d-cu3	3	0.0, 0.0 , 0.0,0.0, 0.0 , 0.0...	-	-	2/2
802d-ng2	3	0.0, 0.0 , 0.0,0.0, 0.0 , 0.0...	-	-	-1/7
802d-ng3	3	0.0, 0.0 , 0.0,0.0, 0.0 , 0.0...	-	-	-1/7
802d-tm1	3	0.0, 0.0 , 0.0,0.0, 0.0 , 0.0...	-	-	0/0
802d-tm2	3	0.0, 0.0 , 0.0,0.0, 0.0 , 0.0...	-	-	2/2
802d-tm3	3	0.0, 0.0 , 0.0,0.0, 0.0 , 0.0...	-	-	2/2

Description: Indicates a basic offset of the tools zero for the 2ndTRACYL transformation. The offset is referenced to the geometry axes valid when TRACYL is active. The basic offset is included with and without selection of the tool length compensation. Programmed length corrections have an additive effect with respect to the basic tool.
The index i takes the values 0, 1, 2 for the 1st to 3rd geometry axes.
Related to:
MD24820 $MC_TRACYL_BASE_TOOL_1

24900	TRANSMIT_ROT_AX_OFFSET_1			C07	M1
degrees	Offset of rotary axis for the 1st TRANSMIT transformation			DOUBLE	NEW CONF
-					
802d-cu3	-	0.0,0.0,0.0,0.0,0.0,0.0, 0.0,0.0,0.0...	-	-	2/2
802d-ng2	-	0.0,0.0,0.0,0.0,0.0,0.0, 0.0,0.0,0.0...	-	-	0/0
802d-ng3	-	0.0,0.0,0.0,0.0,0.0,0.0, 0.0,0.0,0.0...	-	-	0/0
802d-tm1	-	0.0,0.0,0.0,0.0,0.0,0.0, 0.0,0.0,0.0...	-	-	0/0
802d-tm2	-	0.0,0.0,0.0,0.0,0.0,0.0, 0.0,0.0,0.0...	-	-	2/2
802d-tm3	-	0.0,0.0,0.0,0.0,0.0,0.0, 0.0,0.0,0.0...	-	-	2/2

Description: Indicates the offset of the rotary axis for the first agreed TRANSMIT transformation in degrees in relation to the neutral position while TRANSMIT is active.
Related to:
MD24950 $MC_TRANSMIT_ROT_AX_OFFSET_2

24905	TRANSMIT_ROT_AX_FRAME_1			C07	M1,K2
-	Rotary axis offset TRANSMIT 1			BYTE	NEW CONF
-					
802d-cu3	-	0,0,0,0,0,0,0,0,0,0,0,0,0,0,0,0	0	2	2/2
802d-ng2	-	0,0,0,0,0,0,0,0,0,0,0,0,0,0,0,0	0	2	0/0
802d-ng3	-	0,0,0,0,0,0,0,0,0,0,0,0,0,0,0,0	0	2	0/0
802d-tm1	-	0,0,0,0,0,0,0,0,0,0,0,0,0,0,0,0	0	2	0/0
802d-tm2	-	0,0,0,0,0,0,0,0,0,0,0,0,0,0,0,0	0	2	2/2
802d-tm3	-	0,0,0,0,0,0,0,0,0,0,0,0,0,0,0,0	0	2	2/2

Description: 0: axial rotary axis offset is not considered.
1: axial rotary axis offset is considered.
2: axial rotary axis offset is considered until SZS.
SZS frames include transformed rotations around the rotary axis.

24910	TRANSMIT_ROT_SIGN_IS_PLUS_1			C07	M1
-	Sign of rotary axis for 1st TRANSMIT transformation			BOOLEAN	NEW CONF
-					
802d-cu3	-	TRUE,TRUE,TRUE,TRUE,TRUE,TRUE,TRUE...	-	-	2/2
802d-ng2	-	TRUE,TRUE,TRUE,TRUE,TRUE,TRUE,TRUE...	-	-	0/0
802d-ng3	-	TRUE,TRUE,TRUE,TRUE,TRUE,TRUE,TRUE...	-	-	0/0
802d-tm1	-	TRUE,TRUE,TRUE,TRUE,TRUE,TRUE,TRUE...	-	-	0/0
802d-tm2	-	TRUE,TRUE,TRUE,TRUE,TRUE,TRUE,TRUE...	-	-	2/2
802d-tm3	-	TRUE,TRUE,TRUE,TRUE,TRUE,TRUE,TRUE...	-	-	2/2

Description: Indicates the sign with which the rotary axis is taken into account in the TRANSMIT transformation for the first agreed TRANSMIT transformation for each channel.
Related to:
MD24960 $MC_TRANSMIT_ROT_SIGN_IS_PLUS_2

24911	TRANSMIT_POLE_SIDE_FIX_1			C07	M1
-	Restr. working range before/behind the pole, 1. TRANSMIT			BYTE	NEW CONF
-					
802d-cu3	-	0,0,0,0,0,0,0,0,0,0,0,0,0,0,0,0	0	2	2/2
802d-ng2	-	0,0,0,0,0,0,0,0,0,0,0,0,0,0,0,0	0	2	0/0
802d-ng3	-	0,0,0,0,0,0,0,0,0,0,0,0,0,0,0,0	0	2	0/0
802d-tm1	-	0,0,0,0,0,0,0,0,0,0,0,0,0,0,0,0	0	2	0/0
802d-tm2	-	0,0,0,0,0,0,0,0,0,0,0,0,0,0,0,0	0	2	2/2
802d-tm3	-	0,0,0,0,0,0,0,0,0,0,0,0,0,0,0,0	0	2	2/2

Description: Restriction of the working area in front of/behind pole or no restriction, i.e. traversal through the pole.
The assigned values have the following meanings:
1: Working area of linear axis for positions >=0,
(if tool length compensation parallel to linear axis equals 0)
2: Working area of linear axis for positions <=0,
(if tool length compensation parallel to linear axis equals 0)
0: No restriction of working area. Traversal through pole.

24920	TRANSMIT_BASE_TOOL_1			C07	M1
mm	Vector of base tool for 1st TRANSMIT transformation			DOUBLE	NEW CONF
-					
802d-cu3	3	0.0, 0.0 , 0.0,0.0, 0.0 , 0.0...	-	-	2/2
802d-ng2	3	0.0, 0.0 , 0.0,0.0, 0.0 , 0.0...	-	-	0/0
802d-ng3	3	0.0, 0.0 , 0.0,0.0, 0.0 , 0.0...	-	-	0/0
802d-tm1	3	0.0, 0.0 , 0.0,0.0, 0.0 , 0.0...	-	-	0/0
802d-tm2	3	0.0, 0.0 , 0.0,0.0, 0.0 , 0.0...	-	-	2/2
802d-tm3	3	0.0, 0.0 , 0.0,0.0, 0.0 , 0.0...	-	-	2/2

Description: Indicates a basic offset of the tools zero for the 1st TRANSMIT transformation. The offset is referenced to the geometry axes valid when TRANSMIT is active. The basic offset is included with and without selection of the tool length compensation. Programmed length corrections have an additive effect with respect to the basic tool.
The index i takes the values 0, 1, 2 for the 1st to 3rd geometry axes.
Related to:
MD24970 $MC_TRANSMIT_BASE_TOOL_2

24950	TRANSMIT_ROT_AX_OFFSET_2			C07	M1
degrees	Offset of rotary axis for the 2nd TRANSMIT transformation			DOUBLE	NEW CONF
-					
802d-cu3	-	0.0,0.0,0.0,0.0,0.0,0.0,0.0, 0.0,0.0,0.0...	-	-	2/2
802d-ng2	-	0.0,0.0,0.0,0.0,0.0,0.0,0.0, 0.0,0.0,0.0...	-	-	0/0
802d-ng3	-	0.0,0.0,0.0,0.0,0.0,0.0,0.0, 0.0,0.0,0.0...	-	-	0/0
802d-tm1	-	0.0,0.0,0.0,0.0,0.0,0.0,0.0, 0.0,0.0,0.0...	-	-	0/0
802d-tm2	-	0.0,0.0,0.0,0.0,0.0,0.0,0.0, 0.0,0.0,0.0...	-	-	2/2
802d-tm3	-	0.0,0.0,0.0,0.0,0.0,0.0,0.0, 0.0,0.0,0.0...	-	-	2/2

Description: Indicates the offset of the rotary axis for the second agreed TRANSMIT transformation in degrees in relation to the neutral position while TRANSMIT is active.

Related to:

MD24900 $MC_TRANSMIT_ROT_AX_OFFSET_1

24955	TRANSMIT_ROT_AX_FRAME_2			C07	M1
-	Rotary axis offset TRANSMIT 2			BYTE	NEW CONF
-					
802d-cu3	-	0,0,0,0,0,0,0,0,0,0,0, 0,0,0,0	0	2	2/2
802d-ng2	-	0,0,0,0,0,0,0,0,0,0,0, 0,0,0,0	0	2	0/0
802d-ng3	-	0,0,0,0,0,0,0,0,0,0,0, 0,0,0,0	0	2	0/0
802d-tm1	-	0,0,0,0,0,0,0,0,0,0,0, 0,0,0,0	0	2	0/0
802d-tm2	-	0,0,0,0,0,0,0,0,0,0,0, 0,0,0,0	0	2	2/2
802d-tm3	-	0,0,0,0,0,0,0,0,0,0,0, 0,0,0,0	0	2	2/2

Description: 0: axial rotary axis offset is not considered.

1: axial rotary axis offset is considered.

2: axial rotary axis offset is considered until SZS.

SZS frames include transformed rotations around the rotary axis.

24960	TRANSMIT_ROT_SIGN_IS_PLUS_2			C07	M1
-	Sign of rotary axis for 2nd TRANSMIT transformation			BOOLEAN	NEW CONF
-					
802d-cu3	-	TRUE,TRUE,TRUE,TRUE,TRUE,TRUE,TRUE...	-	-	2/2
802d-ng2	-	TRUE,TRUE,TRUE,TRUE,TRUE,TRUE,TRUE...	-	-	0/0
802d-ng3	-	TRUE,TRUE,TRUE,TRUE,TRUE,TRUE,TRUE...	-	-	0/0
802d-tm1	-	TRUE,TRUE,TRUE,TRUE,TRUE,TRUE,TRUE...	-	-	0/0
802d-tm2	-	TRUE,TRUE,TRUE,TRUE,TRUE,TRUE,TRUE...	-	-	2/2
802d-tm3	-	TRUE,TRUE,TRUE,TRUE,TRUE,TRUE,TRUE...	-	-	2/2

Description: Indicates the sign with which the rotary axis is taken into account in the TRANSMIT transformation for the second agreed TRANSMIT transformation for each channel.
Related to:
MD24910 $MC_TRANSMIT_ROT_SIGN_IS_PLUS_1

24961	TRANSMIT_POLE_SIDE_FIX_2			C07	M1
-	Restr. of working range before/behind the pole, 2. TRANSMIT			BYTE	NEW CONF
-					
802d-cu3	-	0,0,0,0,0,0,0,0,0,0,0,0,0,0,0,0	0	2	2/2
802d-ng2	-	0,0,0,0,0,0,0,0,0,0,0,0,0,0,0,0	0	2	0/0
802d-ng3	-	0,0,0,0,0,0,0,0,0,0,0,0,0,0,0,0	0	2	0/0
802d-tm1	-	0,0,0,0,0,0,0,0,0,0,0,0,0,0,0,0	0	2	0/0
802d-tm2	-	0,0,0,0,0,0,0,0,0,0,0,0,0,0,0,0	0	2	2/2
802d-tm3	-	0,0,0,0,0,0,0,0,0,0,0,0,0,0,0,0	0	2	2/2

Description: Restriction of working area in front of/behind pole or no restriction, i.e. traversal through pole.
The assigned values have the following meanings:
1: Working area of linear axis for positions >=0,
(if tool length compensation parallel to linear axis equals 0)
2: Working area of linear axis for positions <=0,
(if tool length compensation parallel to linear axis equals 0)
0: No restriction of working area. Traversal through pole.

24970	TRANSMIT_BASE_TOOL_2			C07	M1
mm	Vector of base tool for 2nd TRANSMIT transformation			DOUBLE	NEW CONF
-					
802d-cu3	3	0.0, 0.0 , 0.0,0.0, 0.0 , 0.0...	-	-	2/2
802d-ng2	3	0.0, 0.0 , 0.0,0.0, 0.0 , 0.0...	-	-	0/0
802d-ng3	3	0.0, 0.0 , 0.0,0.0, 0.0 , 0.0...	-	-	0/0
802d-tm1	3	0.0, 0.0 , 0.0,0.0, 0.0 , 0.0...	-	-	0/0
802d-tm2	3	0.0, 0.0 , 0.0,0.0, 0.0 , 0.0...	-	-	2/2
802d-tm3	3	0.0, 0.0 , 0.0,0.0, 0.0 , 0.0...	-	-	2/2

Description: Indicates a basic offset of the tools zero for the 2nd TRANSMIT transformation. The offset is referenced to the geometry axes valid when TRANSMIT is active. The basic offset is included with and without selection of the tool length compensation. Programmed length corrections have an additive effect with respect to the basic tool.
The index i takes the values 0, 1, 2 for the 1st to 3rd geometry axes.
Related to:
MD24920 $MC_TRANSMIT_BASE_TOOL_1

24997	TRACON_CHAIN_3			C07	M1
-	Transformation grouping			DWORD	NEW CONF
-					
-	4	0, 0, 0 ,0,0, 0, 0, 0,0, 0, 0, 0...	0	20	-1/7

Description: Transformation chain of the third concatenated transformation.
See TRACON_CHAIN_1 for documentation.

24998	TRACON_CHAIN_4			C07	M1
-	Transformation grouping			DWORD	NEW CONF
-					
-	4	0, 0, 0 ,0,0, 0, 0, 0,0, 0, 0, 0...	0	20	-1/7

Description: Transformation chain of the fourth concatenated transformation.
See TRACON_CHAIN_1 for documentation.

25100	TRAFO_TYPE_11			C07	F2
-	Definition of the 11th transformation in the channel			DWORD	NEW CONF
-					
-	-	0,0,0,0,0,0,0,0,0,0,0,0,0,0,0,0	-	-	-1/7

Description: This MD defines for each channel, which transformation is available as 11th transformation in the channel.
Other than that it has the same meaning as TRAFO_TYPE_1.

25102	TRAFO_AXES_IN_11			C07	F2
-	Axis assignment for transformation 11			BYTE	NEW CONF
-					
802d-cu3	6	1, 2, 3, 4, 5, 0, 0, 0, 0, 0, 0, 0, 0, 0, 0, 0, 0, 0, 0, 0, 0...	0	20	-1/7
802d-ng2	6	1, 2, 3, 4, 5, 0, 0, 0, 0, 0, 0, 0, 0, 0, 0, 0, 0, 0, 0, 0, 0...	0	20	-1/7
802d-ng3	6	1, 2, 3, 4, 5, 0, 0, 0, 0, 0, 0, 0, 0, 0, 0, 0, 0, 0, 0, 0, 0...	0	20	-1/7
802d-tm1	4	1, 2, 3, 4, 5, 0, 0, 0, 0, 0, 0, 0, 0, 0, 0, 0, 0, 0, 0, 0, 0...	0	20	-1/7
802d-tm2	6	1, 2, 3, 4, 5, 0, 0, 0, 0, 0, 0, 0, 0, 0, 0, 0, 0, 0, 0, 0, 0...	0	20	-1/7
802d-tm3	6	1, 2, 3, 4, 5, 0, 0, 0, 0, 0, 0, 0, 0, 0, 0, 0, 0, 0, 0, 0, 0...	0	20	-1/7

Description: Axis assignment at the input of the 11th transformation.
See TRAFO_AXES_IN_1 for explanation.

25104	TRAFO_GEOAX_ASSIGN_TAB_11			C07	F2
-	Assignment of geometry axes to channel axes for transformation 11			BYTE	NEW CONF
-					
-	3	0, 0, 0,0, 0, 0,0, 0, 0,0, 0, 0...	0	20	-1/7

Description: This MD states the channel axes on which the axes of the cartesian coordinate system are mapped for active transformation 11.
Otherwise the meaning corresponds to TRAFO_GEOAX_ASSIGN_TAB_1.

25106	TRAFO_INCLUDES_TOOL_11			C07	M1,F2
-	Tool handling with 11th active transformation			BOOLEAN	NEW CONF
-					
-	-	TRUE,TRUE,TRUE,TRUE,TRUE,TRUE,TRUE...	-	-	-1/7

Description: This MD defines for each channel, whether the tool is treated in the 11th transformation or externally.
Other than that it has the same meaning as TRAFO_INCLUDES_TOOL_1.

25110	TRAFO_TYPE_12			C07	F2
-	Definition of transformation 12 in channel			DWORD	NEW CONF
-					
-	-	0,0,0,0,0,0,0,0,0,0,0,0,0,0,0,0	-	-	-1/7

Description: This MD defines for each channel, which transformation is available as 12th transformation in the channel.
Other than that it has the same meaning as TRAFO_TYPE_1.

25112	TRAFO_AXES_IN_12			C07	F2
-	Axis assignment for transformation 12			BYTE	NEW CONF
-					
802d-cu3	6	1, 2, 3, 4, 5, 0, 0, 0, 0, 0, 0, 0, 0, 0, 0, 0, 0, 0, 0, 0...	0	20	-1/7
802d-ng2	6	1, 2, 3, 4, 5, 0, 0, 0, 0, 0, 0, 0, 0, 0, 0, 0, 0, 0, 0, 0...	0	20	-1/7
802d-ng3	6	1, 2, 3, 4, 5, 0, 0, 0, 0, 0, 0, 0, 0, 0, 0, 0, 0, 0, 0, 0...	0	20	-1/7
802d-tm1	4	1, 2, 3, 4, 5, 0, 0, 0, 0, 0, 0, 0, 0, 0, 0, 0, 0, 0, 0, 0...	0	20	-1/7
802d-tm2	6	1, 2, 3, 4, 5, 0, 0, 0, 0, 0, 0, 0, 0, 0, 0, 0, 0, 0, 0, 0...	0	20	-1/7
802d-tm3	6	1, 2, 3, 4, 5, 0, 0, 0, 0, 0, 0, 0, 0, 0, 0, 0, 0, 0, 0, 0...	0	20	-1/7

Description: Axis assignment at the input of the 12th transformation.
See TRAFO_AXES_IN_1 for explanation.

25114	TRAFO_GEOAX_ASSIGN_TAB_12			C07	F2
-	Assignment of geometry axes to channel axes for transformation 12			BYTE	NEW CONF
-					
-	3	0, 0, 0,0, 0, 0,0, 0, 0,0, 0, 0...	0	20	-1/7

Description: This MD states the channel axes on which the axes of the cartesian coordinate system are mapped for active transformation 12.
Otherwise the meaning corresponds to TRAFO_GEOAX_ASSIGN_TAB_1.

25116	TRAFO_INCLUDES_TOOL_12			C07	M1,F2
-	Tool handling with 12th active transformation			BOOLEAN	NEW CONF
-					
-	-	TRUE,TRUE,TRUE,TRUE,TRUE,TRUE,TRUE...	-	-	-1/7

Description: This MD defines for each channel, whether the tool is treated in the 12th transformation or externally.
Other than that it has the same meaning as TRAFO_INCLUDES_TOOL_1.

25120	TRAFO_TYPE_13			C07	F2
-	Definition of transformation 13 in channel			DWORD	NEW CONF
-					
-	-	0,0,0,0,0,0,0,0,0,0,0,0,0,0,0,0	-	-	-1/7

Description: This MD defines for each channel, which transformation is available as 13th transformation in the channel.
Other than that it has the same meaning as TRAFO_TYPE_1.

25122	TRAFO_AXES_IN_13			C07	F2
-	Axis assignment for transformation 13			BYTE	NEW CONF
-					
802d-cu3	6	1, 2, 3, 4, 5, 0, 0, 0, 0, 0, 0, 0, 0, 0, 0, 0, 0, 0, 0, 0, 0...	0	20	-1/7
802d-ng2	6	1, 2, 3, 4, 5, 0, 0, 0, 0, 0, 0, 0, 0, 0, 0, 0, 0, 0, 0, 0, 0...	0	20	-1/7
802d-ng3	6	1, 2, 3, 4, 5, 0, 0, 0, 0, 0, 0, 0, 0, 0, 0, 0, 0, 0, 0, 0, 0...	0	20	-1/7
802d-tm1	4	1, 2, 3, 4, 5, 0, 0, 0, 0, 0, 0, 0, 0, 0, 0, 0, 0, 0, 0, 0, 0...	0	20	-1/7
802d-tm2	6	1, 2, 3, 4, 5, 0, 0, 0, 0, 0, 0, 0, 0, 0, 0, 0, 0, 0, 0, 0, 0...	0	20	-1/7
802d-tm3	6	1, 2, 3, 4, 5, 0, 0, 0, 0, 0, 0, 0, 0, 0, 0, 0, 0, 0, 0, 0, 0...	0	20	-1/7

Description: Axis assignment at the input of the 13th transformation.
See TRAFO_AXES_IN_1 for explanation.

25124	TRAFO_GEOAX_ASSIGN_TAB_13			C07	F2
-	Assignment of geometry axes to channel axes for transformation 13			BYTE	NEW CONF
-					
-	3	0, 0, 0,0, 0, 0,0, 0, 0,0, 0, 0...	0	20	-1/7

Description: This MD states the channel axes on which the axes of the cartesian coordinate system are mapped for active transformation 13.
Otherwise the meaning corresponds to TRAFO_GEOAX_ASSIGN_TAB_1.

25126	TRAFO_INCLUDES_TOOL_13			C07	M1,F2
-	Tool handling with 13th active transformation			BOOLEAN	NEW CONF
-					
-	-	TRUE,TRUE,TRUE,TRUE,TRUE,TRUE,TRUE...	-	-	-1/7

Description: This MD defines for each channel, whether the tool is treated in the 13th transformation or externally.
Other than that it has the same meaning as TRAFO_INCLUDES_TOOL_1.

25130	TRAFO_TYPE_14			C07	F2
-	Definition of transformation 14 in channel			DWORD	NEW CONF
-					
-	-	0,0,0,0,0,0,0,0,0,0,0,0,0,0,0,0	-	-	-1/7

Description: This MD defines for each channel, which transformation is available as 14th transformation in the channel.
Other than that it has the same meaning as TRAFO_TYPE_1.

25132	TRAFO_AXES_IN_14			C07	F2
-	Axis assignment for transformation 14			BYTE	NEW CONF
-					
802d-cu3	6	1, 2, 3, 4, 5, 0, 0, 0, 0, 0, 0, 0, 0, 0, 0, 0, 0, 0, 0, 0...	0	20	-1/7
802d-ng2	6	1, 2, 3, 4, 5, 0, 0, 0, 0, 0, 0, 0, 0, 0, 0, 0, 0, 0, 0, 0...	0	20	-1/7
802d-ng3	6	1, 2, 3, 4, 5, 0, 0, 0, 0, 0, 0, 0, 0, 0, 0, 0, 0, 0, 0, 0...	0	20	-1/7
802d-tm1	4	1, 2, 3, 4, 5, 0, 0, 0, 0, 0, 0, 0, 0, 0, 0, 0, 0, 0, 0, 0...	0	20	-1/7
802d-tm2	6	1, 2, 3, 4, 5, 0, 0, 0, 0, 0, 0, 0, 0, 0, 0, 0, 0, 0, 0, 0...	0	20	-1/7
802d-tm3	6	1, 2, 3, 4, 5, 0, 0, 0, 0, 0, 0, 0, 0, 0, 0, 0, 0, 0, 0, 0...	0	20	-1/7

Description: Axis assignment at the input of the 14th transformation.
See TRAFO_AXES_IN_1 for explanation.

25134	TRAFO_GEOAX_ASSIGN_TAB_14			C07	F2
-	Assignment of geometry axes to channel axes for transformation 14			BYTE	NEW CONF
-					
-	3	0, 0, 0,0, 0, 0,0, 0, 0,0, 0, 0...	0	20	-1/7

Description: This MD states the channel axes on which the axes of the cartesian coordinate system are mapped for active transformation 14.
Otherwise the meaning corresponds to TRAFO_GEOAX_ASSIGN_TAB_1.

25136	TRAFO_INCLUDES_TOOL_14			C07	M1,F2
-	Tool handling with 14th active transformation			BOOLEAN	NEW CONF
-					
-	-	TRUE,TRUE,TRUE,TRUE,TRUE,TRUE,TRUE...	-	-	-1/7

Description: This MD defines for each channel, whether the tool is treated in the 14th transformation or externally.
Other than that it has the same meaning as TRAFO_INCLUDES_TOOL_1.

25140	TRAFO_TYPE_15			C07	F2
-	Definition of transformation 15 in channel			DWORD	NEW CONF
-					
-	-	0,0,0,0,0,0,0,0,0,0,0,0,0,0,0,0	-	-	-1/7

Description: This MD defines for each channel, which transformation is available as 15th transformation in the channel.
Other than that it has the same meaning as TRAFO_TYPE_1.

25142	TRAFO_AXES_IN_15			C07	F2
-	Axis assignment for transformation 15			BYTE	NEW CONF
-					
802d-cu3	6	1, 2, 3, 4, 5, 0, 0, 0, 0, 0, 0, 0, 0, 0, 0, 0, 0, 0, 0, 0, 0...	0	20	-1/7
802d-ng2	6	1, 2, 3, 4, 5, 0, 0, 0, 0, 0, 0, 0, 0, 0, 0, 0, 0, 0, 0, 0, 0...	0	20	-1/7
802d-ng3	6	1, 2, 3, 4, 5, 0, 0, 0, 0, 0, 0, 0, 0, 0, 0, 0, 0, 0, 0, 0, 0...	0	20	-1/7
802d-tm1	4	1, 2, 3, 4, 5, 0, 0, 0, 0, 0, 0, 0, 0, 0, 0, 0, 0, 0, 0, 0, 0...	0	20	-1/7
802d-tm2	6	1, 2, 3, 4, 5, 0, 0, 0, 0, 0, 0, 0, 0, 0, 0, 0, 0, 0, 0, 0, 0...	0	20	-1/7
802d-tm3	6	1, 2, 3, 4, 5, 0, 0, 0, 0, 0, 0, 0, 0, 0, 0, 0, 0, 0, 0, 0, 0...	0	20	-1/7

Description: Axis assignment at the input of the 15th transformation.
See TRAFO_AXES_IN_1 for explanation.

25144	TRAFO_GEOAX_ASSIGN_TAB_15			C07	F2
-	Assignment of geometry axes to channel axes for transformation 15			BYTE	NEW CONF
-					
-	3	0, 0, 0,0, 0, 0,0, 0, 0,0, 0, 0...	0	20	-1/7

Description: This MD states the channel axes on which the axes of the cartesian coordinate system are mapped for active transformation 15.
Otherwise the meaning corresponds to TRAFO_GEOAX_ASSIGN_TAB_1.

25146	TRAFO_INCLUDES_TOOL_15			C07	M1,F2
-	Tool handling with 15th active transformation			BOOLEAN	NEW CONF
-					
-	-	TRUE,TRUE,TRUE,TRUE,TRUE,TRUE,TRUE...	-	-	-1/7

Description: This MD defines for each channel, whether the tool is treated in the 15th transformation or externally.
Other than that it has the same meaning as TRAFO_INCLUDES_TOOL_1.

25150	TRAFO_TYPE_16			C07	F2
-	Definition of transformation 16 in channel			DWORD	NEW CONF
-					
-	-	0,0,0,0,0,0,0,0,0,0,0,0,0,0,0,0	-	-	-1/7

Description: This MD defines for each channel, which transformation is available as 16th transformation in the channel.
Other than that it has the same meaning as TRAFO_TYPE_1.

25152	TRAFO_AXES_IN_16			C07	F2
-	Axis assignment for transformation 16			BYTE	NEW CONF
-					
802d-cu3	6	1, 2, 3, 4, 5, 0, 0, 0, 0, 0, 0, 0, 0, 0, 0, 0, 0, 0, 0, 0...	0	20	-1/7
802d-ng2	6	1, 2, 3, 4, 5, 0, 0, 0, 0, 0, 0, 0, 0, 0, 0, 0, 0, 0, 0, 0...	0	20	-1/7
802d-ng3	6	1, 2, 3, 4, 5, 0, 0, 0, 0, 0, 0, 0, 0, 0, 0, 0, 0, 0, 0, 0...	0	20	-1/7
802d-tm1	4	1, 2, 3, 4, 5, 0, 0, 0, 0, 0, 0, 0, 0, 0, 0, 0, 0, 0, 0, 0...	0	20	-1/7
802d-tm2	6	1, 2, 3, 4, 5, 0, 0, 0, 0, 0, 0, 0, 0, 0, 0, 0, 0, 0, 0, 0...	0	20	-1/7
802d-tm3	6	1, 2, 3, 4, 5, 0, 0, 0, 0, 0, 0, 0, 0, 0, 0, 0, 0, 0, 0, 0...	0	20	-1/7

Description: Axis assignment at the input of the 16th transformation.
See TRAFO_AXES_IN_1 for explanation.

25154	TRAFO_GEOAX_ASSIGN_TAB_16			C07	F2
-	Assignment of geometry axes to channel axes for transformation 16			BYTE	NEW CONF
-					
-	3	0, 0, 0,0, 0, 0,0, 0, 0,0, 0, 0...	0	20	-1/7

Description: This MD states the channel axes on which the axes of the cartesian coordinate system are mapped for active transformation 16.
Otherwise the meaning corresponds to TRAFO_GEOAX_ASSIGN_TAB_1.

25156	TRAFO_INCLUDES_TOOL_16			C07	M1,F2
-	Tool handling with 16th active transformation			BOOLEAN	NEW CONF
-					
-	-	TRUE,TRUE,TRUE,TRUE,TRUE,TRUE,TRUE...	-	-	-1/7

Description: This MD defines for each channel, whether the tool is treated in the 16th transformation or externally.
Other than that it has the same meaning as TRAFO_INCLUDES_TOOL_1.

25160	TRAFO_TYPE_17			C07	F2
-	Definition of transformation 17 in channel			DWORD	NEW CONF
-					
-	-	0,0,0,0,0,0,0,0,0,0,0,0,0,0,0,0	-	-	-1/7

Description: This MD defines for each channel, which transformation is available as 17th transformation in the channel.
Other than that it has the same meaning as TRAFO_TYPE_1.

25162	TRAFO_AXES_IN_17			C07	F2
-	Axis assignment for transformation 17			BYTE	NEW CONF
-					
802d-cu3	6	1, 2, 3, 4, 5, 0, 0, 0, 0, 0, 0, 0, 0, 0, 0, 0, 0, 0, 0, 0, 0...	0	20	-1/7
802d-ng2	6	1, 2, 3, 4, 5, 0, 0, 0, 0, 0, 0, 0, 0, 0, 0, 0, 0, 0, 0, 0, 0...	0	20	-1/7
802d-ng3	6	1, 2, 3, 4, 5, 0, 0, 0, 0, 0, 0, 0, 0, 0, 0, 0, 0, 0, 0, 0, 0...	0	20	-1/7
802d-tm1	4	1, 2, 3, 4, 5, 0, 0, 0, 0, 0, 0, 0, 0, 0, 0, 0, 0, 0, 0, 0, 0...	0	20	-1/7
802d-tm2	6	1, 2, 3, 4, 5, 0, 0, 0, 0, 0, 0, 0, 0, 0, 0, 0, 0, 0, 0, 0, 0...	0	20	-1/7
802d-tm3	6	1, 2, 3, 4, 5, 0, 0, 0, 0, 0, 0, 0, 0, 0, 0, 0, 0, 0, 0, 0, 0...	0	20	-1/7

Description: Axis assignment at the input of the 17th transformation.
See TRAFO_AXES_IN_1 for explanation.

25164	TRAFO_GEOAX_ASSIGN_TAB_17			C07	F2
-	Assignment of geometry axes to channel axes for transformation 17			BYTE	NEW CONF
-					
-	3	0, 0, 0,0, 0, 0,0, 0, 0,0, 0, 0...	0	20	-1/7

Description: This MD states the channel axes on which the axes of the cartesian coordinate system are mapped for active transformation 17.
Otherwise the meaning corresponds to TRAFO_GEOAX_ASSIGN_TAB_1.

25166	TRAFO_INCLUDES_TOOL_17			C07	M1,F2
-	Tool handling with 17th active transformation			BOOLEAN	NEW CONF
-					
-	-	TRUE,TRUE,TRUE,TRUE,TRUE,TRUE,TRUE...	-	-	-1/7

Description: This MD defines for each channel, whether the tool is treated in the 17th transformation or externally.
Other than that it has the same meaning as TRAFO_INCLUDES_TOOL_1.

25170	TRAFO_TYPE_18			C07	F2
-	Definition of transformation 18 in channel			DWORD	NEW CONF
-					
-	-	0,0,0,0,0,0,0,0,0,0,0,0,0,0,0,0	-	-	-1/7

Description: This MD defines for each channel, which transformation is available as 18th transformation in the channel.
Other than that it has the same meaning as TRAFO_TYPE_1.

25172	TRAFO_AXES_IN_18			C07	F2
-	Axis assignment for transformation 18			BYTE	NEW CONF
-					
802d-cu3	6	1, 2, 3, 4, 5, 0, 0, 0, 0, 0, 0, 0, 0, 0, 0, 0, 0, 0, 0, 0...	0	20	-1/7
802d-ng2	6	1, 2, 3, 4, 5, 0, 0, 0, 0, 0, 0, 0, 0, 0, 0, 0, 0, 0, 0, 0...	0	20	-1/7
802d-ng3	6	1, 2, 3, 4, 5, 0, 0, 0, 0, 0, 0, 0, 0, 0, 0, 0, 0, 0, 0, 0...	0	20	-1/7
802d-tm1	4	1, 2, 3, 4, 5, 0, 0, 0, 0, 0, 0, 0, 0, 0, 0, 0, 0, 0, 0, 0...	0	20	-1/7
802d-tm2	6	1, 2, 3, 4, 5, 0, 0, 0, 0, 0, 0, 0, 0, 0, 0, 0, 0, 0, 0, 0...	0	20	-1/7
802d-tm3	6	1, 2, 3, 4, 5, 0, 0, 0, 0, 0, 0, 0, 0, 0, 0, 0, 0, 0, 0, 0...	0	20	-1/7

Description: Axis assignment at the input of the 18th transformation.
See TRAFO_AXES_IN_1 for explanation.

25174	TRAFO_GEOAX_ASSIGN_TAB_18			C07	F2
-	Assignment of geometry axes to channel axes for transformation 18			BYTE	NEW CONF
-					
-	3	0, 0, 0,0, 0, 0,0, 0, 0,0, 0, 0...	0	20	-1/7

Description: This MD states the channel axes on which the axes of the cartesian coordinate system are mapped for active transformation 18.
Otherwise the meaning corresponds to TRAFO_GEOAX_ASSIGN_TAB_1.

25176	TRAFO_INCLUDES_TOOL_18			C07	M1,F2
-	Tool handling with 18th active transformation			BOOLEAN	NEW CONF
-					
-	-	TRUE,TRUE,TRUE,TRUE,TRUE,TRUE,TRUE...	-	-	-1/7

Description: This MD defines for each channel, whether the tool is treated in the 18th transformation or externally.
Other than that it has the same meaning as TRAFO_INCLUDES_TOOL_1.

25180	TRAFO_TYPE_19			C07	F2
-	Definition of transformation 19 in channel			DWORD	NEW CONF
-					
-	-	0,0,0,0,0,0,0,0,0,0,0,0,0,0,0,0	-	-	-1/7

Description: This MD defines for each channel, which transformation is available as 19th transformation in the channel.
Other than that it has the same meaning as TRAFO_TYPE_1.

25182	TRAFO_AXES_IN_19			C07	F2
-	Axis assignment for transformation 19			BYTE	NEW CONF
-					
802d-cu3	6	1, 2, 3, 4, 5, 0, 0, 0, 0, 0, 0, 0, 0, 0, 0, 0, 0, 0, 0, 0, 0...	0	20	-1/7
802d-ng2	6	1, 2, 3, 4, 5, 0, 0, 0, 0, 0, 0, 0, 0, 0, 0, 0, 0, 0, 0, 0, 0...	0	20	-1/7
802d-ng3	6	1, 2, 3, 4, 5, 0, 0, 0, 0, 0, 0, 0, 0, 0, 0, 0, 0, 0, 0, 0, 0...	0	20	-1/7
802d-tm1	4	1, 2, 3, 4, 5, 0, 0, 0, 0, 0, 0, 0, 0, 0, 0, 0, 0, 0, 0, 0, 0...	0	20	-1/7
802d-tm2	6	1, 2, 3, 4, 5, 0, 0, 0, 0, 0, 0, 0, 0, 0, 0, 0, 0, 0, 0, 0, 0...	0	20	-1/7
802d-tm3	6	1, 2, 3, 4, 5, 0, 0, 0, 0, 0, 0, 0, 0, 0, 0, 0, 0, 0, 0, 0, 0...	0	20	-1/7

Description: Axis assignment at the input of the 19th transformation.
See TRAFO_AXES_IN_1 for explanation.

25184	TRAFO_GEOAX_ASSIGN_TAB_19			C07	F2
-	Assignment of geometry axes to channel axes for transformation 19			BYTE	NEW CONF
-					
-	3	0, 0, 0,0, 0, 0,0, 0, 0,0, 0, 0...	0	20	-1/7

Description: This MD states the channel axes on which the axes of the cartesian coordinate system are mapped for active transformation 19.
Otherwise the meaning corresponds to TRAFO_GEOAX_ASSIGN_TAB_1.

25186	TRAFO_INCLUDES_TOOL_19			C07	M1,F2
-	Tool handling with 19th active transformation			BOOLEAN	NEW CONF
-					
-	-	TRUE,TRUE,TRUE,TRUE,TRUE,TRUE,TRUE...	-	-	-1/7

Description: This MD defines for each channel, whether the tool is treated in the 19th transformation or externally.
Other than that it has the same meaning as TRAFO_INCLUDES_TOOL_1.

25190	TRAFO_TYPE_20			C07	F2
-	Definition of transformation 20 in channel			DWORD	NEW CONF
-					
-	-	0,0,0,0,0,0,0,0,0,0,0,0,0,0,0,0	-	-	-1/7

Description: This MD defines for each channel, which transformation is available as 20th transformation in the channel.
Other than that it has the same meaning as TRAFO_TYPE_1.

25192	TRAFO_AXES_IN_20			C07	F2
-	Axis assignment for transformation 20			BYTE	NEW CONF
-					
802d-cu3	6	1, 2, 3, 4, 5, 0, 0, 0, 0, 0, 0, 0, 0, 0, 0, 0, 0, 0, 0, 0...	0	20	-1/7
802d-ng2	6	1, 2, 3, 4, 5, 0, 0, 0, 0, 0, 0, 0, 0, 0, 0, 0, 0, 0, 0, 0...	0	20	-1/7
802d-ng3	6	1, 2, 3, 4, 5, 0, 0, 0, 0, 0, 0, 0, 0, 0, 0, 0, 0, 0, 0, 0...	0	20	-1/7
802d-tm1	4	1, 2, 3, 4, 5, 0, 0, 0, 0, 0, 0, 0, 0, 0, 0, 0, 0, 0, 0, 0...	0	20	-1/7
802d-tm2	6	1, 2, 3, 4, 5, 0, 0, 0, 0, 0, 0, 0, 0, 0, 0, 0, 0, 0, 0, 0...	0	20	-1/7
802d-tm3	6	1, 2, 3, 4, 5, 0, 0, 0, 0, 0, 0, 0, 0, 0, 0, 0, 0, 0, 0, 0...	0	20	-1/7

Description: Axis assignment at the input of the 20th transformation.
See TRAFO_AXES_IN_1 for explanation.

25194	TRAFO_GEOAX_ASSIGN_TAB_20			C07	F2
-	Assignment of geometry axes to channel axes for transformation 20			BYTE	NEW CONF
-					
-	3	0, 0, 0,0, 0, 0,0, 0, 0,0, 0, 0...	0	20	-1/7

Description: This MD states the channel axes on which the axes of the cartesian coordinate system are mapped for active transformation 20.
Otherwise the meaning corresponds to TRAFO_GEOAX_ASSIGN_TAB_1.

25196	TRAFO_INCLUDES_TOOL_20			C07	M1,F2
-	Tool handling with 20th active transformation			BOOLEAN	NEW CONF
-					
-	-	TRUE,TRUE,TRUE,TRUE,TRUE,TRUE,TRUE...	-	-	-1/7

Description: This MD defines for each channel, whether the tool is treated in the 20th transformation or externally.
Other than that it has the same meaning as TRAFO_INCLUDES_TOOL_1.

25261	TRAFO6_JOINT_OFFSET_2_3_3			C07	-
mm	Vector of kinematic offset			DOUBLE	NEW CONF
-					
-	3	0.0, 0.0 , 0.0,0.0, 0.0 , 0.0...	-	-	-1/7

Description: In the case of 6-axis transformations, defines the offset between the 2nd and third rotary axes for the 3rd transformation of each channel.

25273	TRAFO5_AXIS3_3			C07	-
-	Direction of the 3rd rotary axis			DOUBLE	NEW CONF
-					
-	3	0.0, 0.0 , 0.0,0.0, 0.0 , 0.0...	-	-	-1/7

Description: The MD designates the vector that describes the direction of the third rotary axis with the general 6-axis transformation (TRAFO_TYPE_* = 24, 40, 56, 57).
Other than that it has the same meaning as TRAFO5_AXIS3_1.

25276	TRAFO6_BASE_ORIENT_NORMAL_3			C07	-
-	Normal tool vector in 6-axis transformation			DOUBLE	NEW CONF
-					
-	3	0.0, 1.0 , 0.0,0.0, 1.0 , 0.0...	-	-	-1/7

Description: Indicates the vector that stands vertically on the tool orientation (TRAFO5_BASE_ORIENTATION_1) in general 6-axis transformation (TRAFO_TYPE_* = 24, 40, 56, 57).
Other than that it has the same meaning as TRAFO6_BASE_ORIENT_NORMAL_1.

25361	TRAFO6_JOINT_OFFSET_2_3_4			C07	-
mm	Vector of kinematic offset			DOUBLE	NEW CONF
-					
-	3	0.0, 0.0 , 0.0,0.0, 0.0 , 0.0...	-	-	-1/7

Description: In the case of 6-axis transformations, defines the offset between the 2nd and third rotary axes for the 4th transformation of each channel.

25373	TRAFO5_AXIS3_4			C07	-
-	Direction of the 3rd rotary axis			DOUBLE	NEW CONF
-					
-	3	0.0, 0.0 , 0.0,0.0, 0.0 , 0.0...	-	-	-1/7

Description: The MD designates the vector that describes the direction of the third rotary axis with the general 6-axis transformation (TRAFO_TYPE_* = 24, 40, 56, 57).
Other than that it has the same meaning as TRAFO5_AXIS3_1.

25376	TRAFO6_BASE_ORIENT_NORMAL_4			C07	-
-	Normal tool vector in 6-axis transformation			DOUBLE	NEW CONF
-					
-	3	0.0, 1.0 , 0.0,0.0, 1.0 , 0.0...	-	-	-1/7

Description: Indicates the vector that stands vertically on the tool orientation (TRAFO5_BASE_ORIENTATION_1) in general 6-axis transformation (TRAFO_TYPE_* = 24, 40, 56, 57).
Other than that it has the same meaning as TRAFO6_BASE_ORIENT_NORMAL_1.

25495	TRACON_CHAIN_5			C07	M1
-	Transformation grouping			DWORD	NEW CONF
-					
-	4	0, 0, 0 ,0,0, 0, 0, 0,0, 0, 0, 0...	0	20	-1/7

Description: Transformation chain of the 5th concatenated transformation.
See TRACON_CHAIN_1 for documentation.

25496	TRACON_CHAIN_6			C07	M1
-	Transformation grouping			DWORD	NEW CONF
-					
-	4	0, 0, 0 ,0,0, 0, 0, 0,0, 0, 0, 0...	0	20	-1/7

Description: Transformation chain of the 6th concatenated transformation.
See TRACON_CHAIN_1 for documentation.

25497	TRACON_CHAIN_7			C07	M1
-	Transformation grouping			DWORD	NEW CONF
-					
-	4	0, 0, 0 ,0,0, 0, 0, 0,0, 0, 0, 0...	0	20	-1/7

Description: Transformation chain of the 7th concatenated transformation.
See TRACON_CHAIN_1 for documentation.

25498	TRACON_CHAIN_8			C07	M1
-	Transformation grouping			DWORD	NEW CONF
-					
-	4	0, 0, 0 ,0,0, 0, 0, 0,0, 0, 0, 0...	0	20	-1/7

Description: Transformation chain of the 8th concatenated transformation.
See TRACON_CHAIN_1 for documentation.

2.3.5 Punching and nibbling

26000	PUNCHNIB_ASSIGN_FASTIN			C01, C09	N4
-	Hardware assignment for input byte for stroke control			DWORD	PowerOn
-					
802d-cu3	-	0,0,0,0,0,0,0,0,0,0,0,0,0,0,0,0	-	-	2/2
802d-ng2	-	0,0,0,0,0,0,0,0,0,0,0,0,0,0,0,0	-	-	2/2
802d-ng3	-	0,0,0,0,0,0,0,0,0,0,0,0,0,0,0,0	-	-	2/2
802d-tm1	-	0,0,0,0,0,0,0,0,0,0,0,0,0,0,0,0	-	-	-1/2
802d-tm2	-	0,0,0,0,0,0,0,0,0,0,0,0,0,0,0,0	-	-	-1/2
802d-tm3	-	0,0,0,0,0,0,0,0,0,0,0,0,0,0,0,0	-	-	-1/2

Description:

Assignment of the high-speed input byte for "punching and nibbling"
Bit 0-7: Number of the input byte used
Bit 8-15: Free
Bit 16-23: Inversion mask for writing the hardware byte
Bit 24-31: Free
This data defines which input byte is to be used for the signal "travel active".
= 1:
On-board inputs (4 high-speed NCK outputs) are used.
2, 3, 4, 5
The external digital NCK inputs are used
128-129:
Comparator byte (results from high-speed analog inputs or VDI specification)
Related to:
MD26006 $MC_NIBBLE_PUNCH_INMASK[n]
References:
/FB/, A4, Digital and Analog NCK I/Os
The signal is high active as default from software 3.2. That is there is wire break monitoring. If the signal is low active then, e.g., the MD must be set to the value MD ="H 0001 0001" for the outboard inputs.

26002	PUNCHNIB_ASSIGN_FASTOUT			C01, C09	N4
-	Hardware assignment for output byte for stroke control			DWORD	PowerOn
-					
802d-cu3	-	0,0,0,0,0,0,0,0,0,0,0,0,0,0,0,0	-	-	2/2
802d-ng2	-	0,0,0,0,0,0,0,0,0,0,0,0,0,0,0,0	-	-	2/2
802d-ng3	-	0,0,0,0,0,0,0,0,0,0,0,0,0,0,0,0	-	-	2/2
802d-tm1	-	0,0,0,0,0,0,0,0,0,0,0,0,0,0,0,0	-	-	-1/2
802d-tm2	-	0,0,0,0,0,0,0,0,0,0,0,0,0,0,0,0	-	-	-1/2
802d-tm3	-	0,0,0,0,0,0,0,0,0,0,0,0,0,0,0,0	-	-	-1/2

Description: This data defines which output byte is to be used for the stroke control.
Number of the high-speed output byte for "punching and nibbling"
Bit 0-7: Number of the output byte used
Bit 8-15: Free
Bit 16-23: Inversion mask for writing the hardware byte
Bit 24-31: Free
Possible inputs:
1:
840D on-board outputs (4 high-speed + 4 bits via VDI specification)
2, 3, 4, 5
External digital outputs (high-speed NCK O/I or VDI specification)
Related to:
MD26004 $MC_NIBBLE_PUNCH_OUTMASK[n]
References:
/FB/, A4, Digital and Analog NCK I/Os

26004	NIBBLE_PUNCH_OUTMASK			C01, C09	N4
-	Mask for fast output bits			BYTE	PowerOn
-					
802d-cu3	8	1, 0, 0, 0, 0, 0, 0, 0,0, 0, 0, 0, 0, 0, 0, 0...	-	-	2/2
802d-ng2	8	1, 0, 0, 0, 0, 0, 0, 0,0, 0, 0, 0, 0, 0, 0, 0...	-	-	2/2
802d-ng3	8	1, 0, 0, 0, 0, 0, 0, 0,0, 0, 0, 0, 0, 0, 0, 0...	-	-	2/2
802d-tm1	8	1, 0, 0, 0, 0, 0, 0, 0,0, 0, 0, 0, 0, 0, 0, 0...	-	-	-1/2
802d-tm2	8	1, 0, 0, 0, 0, 0, 0, 0,0, 0, 0, 0, 0, 0, 0, 0...	-	-	-1/2
802d-tm3	8	1, 0, 0, 0, 0, 0, 0, 0,0, 0, 0, 0, 0, 0, 0, 0...	-	-	-1/2

Description: Mask for high-speed output bits for punching and nibbling.
Byte 1: Contains the bit for stroke release
Bytes 2-8: Currently free

Special cases:
Only NIBBLE_PUNCH_OUTMASK[0] is significant.
This is used to define the output bit for the signal "Release stroke".
Related to:
MD26002 $MC_PUNCHNIB_ASSIGN_FASTOUT

26006	NIBBLE_PUNCH_INMASK			C01, C09	N4
-	Mask for fast input bits			BYTE	PowerOn
-					
802d-cu3	8	1, 0, 0, 0, 0, 0, 0, 0,0, 0, 0, 0, 0, 0, 0, 0...	-	-	2/2
802d-ng2	8	1, 0, 0, 0, 0, 0, 0, 0,0, 0, 0, 0, 0, 0, 0, 0...	-	-	2/2
802d-ng3	8	1, 0, 0, 0, 0, 0, 0, 0,0, 0, 0, 0, 0, 0, 0, 0...	-	-	2/2
802d-tm1	8	1, 0, 0, 0, 0, 0, 0, 0,0, 0, 0, 0, 0, 0, 0, 0...	-	-	-1/2
802d-tm2	8	1, 0, 0, 0, 0, 0, 0, 0,0, 0, 0, 0, 0, 0, 0, 0...	-	-	-1/2
802d-tm3	8	1, 0, 0, 0, 0, 0, 0, 0,0, 0, 0, 0, 0, 0, 0, 0...	-	-	-1/2

Description: This data can define up to 8 byte masks for the output of the high-speed bits.
The standard assignment of this data is as follows:
NIBBLE_PUNCH_INMASK[0]=1:
2° = first bit for the first punch interface (SPIF1)
NIBBLE_PUNCH_INMASK[1]=4:
Second punch interface (SPIF2), not available as standard
NIBBLE_PUNCH_INMASK[2]=0
...
NIBBLE_PUNCH_INMASK[7]=0
Note:
-
Special cases:
Only NIBBLE_PUNCH_INMASK[0] is relevant. This is used to define the input bit for the signal "Stroke active".
Related to:
MD26000 $MC_PUNCHNIB_ASSIGN_FASTIN

26008	NIBBLE_PUNCH_CODE			C09	H2,K1
-	Definition of M functions			DWORD	PowerOn
-					
802d-cu3	8	0,23,22, 25, 26, 0, 0, 0,0, 0, 0, 0, 0, 0, 0, 0...	-	-	2/2
802d-ng2	8	0,23,22, 25, 26, 0, 0, 0,0, 0, 0, 0, 0, 0, 0, 0...	-	-	2/2
802d-ng3	8	0,23,22, 25, 26, 0, 0, 0,0, 0, 0, 0, 0, 0, 0, 0...	-	-	2/2
802d-tm1	8	0,23,22, 25, 26, 0, 0, 0,0, 0, 0, 0, 0, 0, 0, 0...	-	-	-1/2
802d-tm2	8	0,23,22, 25, 26, 0, 0, 0,0, 0, 0, 0, 0, 0, 0, 0...	-	-	-1/2
802d-tm3	8	0,23,22, 25, 26, 0, 0, 0,0, 0, 0, 0, 0, 0, 0, 0...	-	-	-1/2

Description: This data defines the special M functions for punching and nibbling.

	Standard value	Example
NIBBLE_PUNCH_CODE[0] = 0	20	End punching, nibbling with M20
NIBBLE_PUNCH_CODE[1] = 23	23	End punching, nibbling with M23
NIBBLE_PUNCH_CODE[2] = 22	22	Start nibbling
NIBBLE_PUNCH_CODE[3] = 25	25	Start punching
NIBBLE_PUNCH_CODE[4] = 26	26	Activate dwell time
NIBBLE_PUNCH_CODE[5] =122	122	Start nibbling with pretension, stroke control at servo level
NIBBLE_PUNCH_CODE[6] =125	125	Start punching with pretension, stroke control at servo level
NIBBLE_PUNCH_CODE[7] = 0	0	Not used (in preparation)

Special cases:
If MD26012 $MC_PUNCHNIB_ACTIVATION = 2 (M functions are interpreted directly by the software), then MD26008 $MC_NIBBLE_PUNCH_CODE[0] =20 has to be set.
Related to:
MD26012 $MC_PUNCHNIB_ACTIVATION

26010	PUNCHNIB_AXIS_MASK			C09	N4
-	Definition of punching and nibbling axes			DWORD	PowerOn
-					
802d-cu3	-	7,0,0,0,0,0,0,0,0,0,0,0,0,0,0,0	-	-	2/2
802d-ng2	-	7,0,0,0,0,0,0,0,0,0,0,0,0,0,0,0	-	-	2/2
802d-ng3	-	7,0,0,0,0,0,0,0,0,0,0,0,0,0,0,0	-	-	2/2
802d-tm1	-	7,0,0,0,0,0,0,0,0,0,0,0,0,0,0,0	-	-	-1/2
802d-tm2	-	7,0,0,0,0,0,0,0,0,0,0,0,0,0,0,0	-	-	-1/2
802d-tm3	-	7,0,0,0,0,0,0,0,0,0,0,0,0,0,0,0	-	-	-1/2

Description: Defines the axes involved in punching and nibbling. That is all the axes defined here must be at rest during punching and nibbling.

Related to:

MD26016 $MC_PUNCH_PARTITION_TYPE

26012	PUNCHNIB_ACTIVATION			C09	K1
-	Activation of punching and nibbling functions			DWORD	PowerOn
-					
802d-cu3	-	0,0,0,0,0,0,0,0,0,0,0,0,0,0,0,0	-	-	2/2
802d-ng2	-	0,0,0,0,0,0,0,0,0,0,0,0,0,0,0,0	-	-	2/2
802d-ng3	-	0,0,0,0,0,0,0,0,0,0,0,0,0,0,0,0	-	-	2/2
802d-tm1	-	0,0,0,0,0,0,0,0,0,0,0,0,0,0,0,0	-	-	-1/2
802d-tm2	-	0,0,0,0,0,0,0,0,0,0,0,0,0,0,0,0	-	-	-1/2
802d-tm3	-	0,0,0,0,0,0,0,0,0,0,0,0,0,0,0,0	-	-	-1/2

Description: This MD defines the ways in which punching and nibbling functions can be activated:

PUNCHNIB_ACTIVATION = 0

None of the punching or nibbling functions can be activated. The automatic path segmentation is the only exception - if it is enabled via MD26014 $MC_PUNCH_PATH_SPLITTING.

PUNCHNIB_ACTIVATION = 1

The functions are activated via language commands. If M functions are to be used, then they must be programmed using macros.

PUNCHNIB_ACTIVATION = 2

The M functions are interpreted directly by the software. Language commands can still be used.

Note:

This option is intended only as a temporary solution.

Related to:

MD26014 $MC_PUNCH_PATH_SPLITTING

MD26008 $MC_NIBBLE_PUNCH_CODE[n]

26014	PUNCH_PATH_SPLITTING			C09	N4
-	Activation of automatic path segmentation			DWORD	PowerOn
-					
802d-cu3	-	2,2,2,2,2,2,2,2,2,2,2,2,2,2,2,2	-	-	2/2
802d-ng2	-	2,2,2,2,2,2,2,2,2,2,2,2,2,2,2,2	-	-	2/2
802d-ng3	-	2,2,2,2,2,2,2,2,2,2,2,2,2,2,2,2	-	-	2/2
802d-tm1	-	2,2,2,2,2,2,2,2,2,2,2,2,2,2,2,2	-	-	-1/2
802d-tm2	-	2,2,2,2,2,2,2,2,2,2,2,2,2,2,2,2	-	-	-1/2
802d-tm3	-	2,2,2,2,2,2,2,2,2,2,2,2,2,2,2,2	-	-	-1/2

Description: Activation data for automatic path segmentation.

Value Significance

---

0 =

Automatic path segmentation only active with punching and nibbling.

1 =

Automatic path segmentation can also be activated without punching and nibbling functions;

that is, it is programmable and be used NC internally

2 =

Automatic path segmentation can only be used NC internally;

that is it cannot be programmed.

26016	PUNCH_PARTITION_TYPE			C09	N4
-	Behavior of individual axes with automatic path segmentation			DWORD	PowerOn
-					
802d-cu3	-	1,0,0,0,0,0,0,0,0,0,0,0,0,0,0,0	-	-	2/2
802d-ng2	-	1,0,0,0,0,0,0,0,0,0,0,0,0,0,0,0	-	-	2/2
802d-ng3	-	1,0,0,0,0,0,0,0,0,0,0,0,0,0,0,0	-	-	2/2
802d-tm1	-	1,0,0,0,0,0,0,0,0,0,0,0,0,0,0,0	-	-	-1/2
802d-tm2	-	1,0,0,0,0,0,0,0,0,0,0,0,0,0,0,0	-	-	-1/2
802d-tm3	-	1,0,0,0,0,0,0,0,0,0,0,0,0,0,0,0	-	-	-1/2

Description: This machine data defines how single axes that are also nibbling axes within the meaning of MD26010 $MC_PUNCHNIB_AXIS_MASK are to behave.

In this case, there are the following options for the behavior of the single axes during automatic path segmentation and stroke control:

PUNCH_PARTITION_TYPE = 0
No special behavior during automatic path segmentation. If the single axes are programmed together with path axes in one block, then their total traversing path is split up corresponding to the path axes. That is the pure geometric relationship between the single axes and path axes is identical to the undivided motion. If the single axes are programmed without the path axes but with SPN=<value>, then the path is divided accordng to the programmed SPN value.
PUNCH_PARTITION_TYPE = 1
In this case, the path of the single axes, if they are programmed together with path axes, are generally traversed in the first section (that is independently of the currently active type of interpolation).
PUNCH_PARTITION_TYPE = 2
In this case, the single axes behave with linear interpolation in the same way as with PUNCH_PARTITION_TYPE = 1, and with all other types of interpolation in the same way as with PUNCH_PARTITION_TYPE = 0.
Related to:
MD26010 $MC_PUNCHNIB_AXIS_MASK

26018	NIBBLE_PRE_START_TIME			C09	N4
s	Delay time for nibbling/punching with G603			DOUBLE	PowerOn
-					
802d-cu3	-	0.,0.,0.,

26020	NIBBLE_SIGNAL_CHECK			C09	N4
-	Alarm on chattering punching signal			DWORD	PowerOn
-					
802d-cu3	-	0,0,0,0,0,0,0,0,0,0,0,0,0,0,0,0	-	-	2/2
802d-ng2	-	0,0,0,0,0,0,0,0,0,0,0,0,0,0,0,0	-	-	2/2
802d-ng3	-	0,0,0,0,0,0,0,0,0,0,0,0,0,0,0,0	-	-	2/2
802d-tm1	-	0,0,0,0,0,0,0,0,0,0,0,0,0,0,0,0	-	-	-1/2
802d-tm2	-	0,0,0,0,0,0,0,0,0,0,0,0,0,0,0,0	-	-	-1/2
802d-tm3	-	0,0,0,0,0,0,0,0,0,0,0,0,0,0,0,0	-	-	-1/2

Description: When stroke active signal is set, for example by punch overshoots between the strokes, then the interpolation is stopped. It is also possible to generate the message "unclean punch signal" as a function of machine data NIBBLE_SIGNAL_CHECK.

0: No error message when the punching signal is irregular

1: Alarm, when the punching signal is irregular between strokes

27100	ABSBLOCK_FUNCTION_MASK			N01	K1,P1
-	Parameterize the block display with absolute values			DWORD	PowerOn
-					
802d-cu3	-	0x0,0x0,0x0,0x0,0x0,0x0,0x0,0x0,0x0,0x0...	0	0x1	2/2
802d-ng2	-	0x0,0x0,0x0,0x0,0x0,0x0,0x0,0x0,0x0,0x0...	0	0x1	2/2
802d-ng3	-	0x0,0x0,0x0,0x0,0x0,0x0,0x0,0x0,0x0,0x0...	0	0x1	2/2
802d-tm1	-	0x0,0x0,0x0,0x0,0x0,0x0,0x0,0x0,0x0,0x0...	0	0x1	0/0
802d-tm2	-	0x0,0x0,0x0,0x0,0x0,0x0,0x0,0x0,0x0,0x0...	0	0x1	2/2
802d-tm3	-	0x0,0x0,0x0,0x0,0x0,0x0,0x0,0x0,0x0,0x0...	0	0x1	2/2

Description: Parameterization of the "block display with absolute values" function

Bit 0 = 1 :

The position values of the transverse axis are always displayed as diameter values.

27200	MMC_INFO_NO_UNIT			EXP, -	-
-	HMI info (without physical unit)			DOUBLE	PowerOn
-					
-	80	45., 2., 0., 1., 0., -1., 0., 1., 100., 1., 1., 0., 0., 0....	-	-	-1/2

Description: -

27201	MMC_INFO_NO_UNIT_STATUS			EXP, -	-
-	HMI status info (without physical unit)			BYTE	PowerOn
-					
-	80	1, 1, 1, 1, 1, 1, 1, 1, 1, 1, 1, 1, 1, 1, 1, 1, 1, 1, 1, 1, 1...	-	-	-1/2

Description: -

27202	MMC_INFO_POSN_LIN			EXP, -	-
mm	HMI info (linear positions)			DOUBLE	PowerOn
-					
-	50	0., 0., 1., 1., 0., 0., 100., 0., 0., 1000., 1., 1....	-	-	-1/2

Description: -

27203	MMC_INFO_POSN_LIN_STATUS			EXP, -	-
-	HMI status info (linear positions)			BYTE	PowerOn
-					
-	50	1, 1, 1, 1, 1, 1, 1, 1, 1, 1, 1, 1, 1, 1, 1, 1, 1, 1, 1, 1, 1...	-	-	-1/2

Description: -

27204	MMC_INFO_VELO_LIN			EXP, -	-
mm/min	HMI info (linear velocities)			DOUBLE	PowerOn
-					
-	16	10., 10., 2000., 10000., 300., 1000., 1000., 10., 0.,0.,0.,0....	-	-	-1/2

Description: -

27205	MMC_INFO_VELO_LIN_STATUS			EXP, -	-
-	HMI status info (linear velocities)			BYTE	PowerOn
-					
-	16	1,1,1,1,1,1,1,1,0,0,0,0, 0,0,0,0...	-	-	-1/2

Description: -

27206	MMC_INFO_CUT_SPEED			EXP, -	-
m/min	HMI info (cutting speed)			DOUBLE	PowerOn
-					
-	5	100.,0.,0.,0.,0.,100.,0., 0.,0.,0....	-	-	-1/2

Description: -

27207	MMC_INFO_CUT_SPEED_STATUS			EXP, -	-
-	HMI status info (cutting speed)			BYTE	PowerOn
-					
-	5	1,0,0,0,0,1,0,0,0,0,1,0, 0,0,0...	-	-	-1/2

Description: -

27208	MMC_INFO_REV_FEED			EXP, -	-
mm/rev	HMI info (feed)			DOUBLE	PowerOn
-					
-	10	1.,0.100,1.,1.,0.,0.,0.,0.,0.,0.,0....	-	-	-1/2

Description: -

27209	MMC_INFO_REV_FEED_STATUS			EXP, -	-
-	HMI status info (feed)			BYTE	PowerOn
-					
-	10	1,1,1,1,0,0,0,0,0,0,1,1,1,1,0,0,0,0,0,0...	-	-	-1/2

Description: -

27400	OEM_CHAN_INFO			A01, A11	-
-	OEM version information			STRING	PowerOn
-					
-	3	, , ,, , ,, , ...	-	-	2/2

Description: A version information freely available to the user
(is indicated in the version screen)

27800	TECHNOLOGY_MODE			C09	A2,K1
-	Mode of technology in channel			BYTE	NEW CONF
-					
802d-cu3	-	0,0,0,0,0,0,0,0,0,0,0,0,0,0,0,0	-	-	2/2
802d-ng2	-	21	-	-	2/2
802d-ng3	-	21	-	-	2/2
802d-tm1	-	0,0,0,0,0,0,0,0,0,0,0,0,0,0,0,0	-	-	2/2
802d-tm2	-	0,0,0,0,0,0,0,0,0,0,0,0,0,0,0,0	-	-	2/2
802d-tm3	-	0,0,0,0,0,0,0,0,0,0,0,0,0,0,0,0	-	-	2/2

Description: Technology selection for display and operational purposes (HMI)
This information is used, among other things, for evaluating HMI.
Meaning:
MD = 0:Milling
MD = 1:Turning
MD = 2:Grinding
21:Cylindrical grinding
22:Surface grinding
MD = 3:Nibbling
Technology-related screens and softkeys are supplied in the HMI.

27860	PROCESSTIMER_MODE			C09	K1
-	Activation of program runtime measurement			DWORD	Reset
-					
-	-	0x07	0	0x3FF	2/2

Description:

Timers are provided as system variables under the function program runtime. While the NCK-specific timers are always activated (for time measurements since the last control power on), the channel-specific timers have to be started via this machine data.

Meaning:

Bit 0 = 0

No measurement of total operating time for any part program

Bit 0 = 1

Measurement of total operating time is active for all part programs ($AC_OPERATING_TIME)

Bit 1 = 0

No measurement of current program runtime

Bit 1 = 1

Measurement of current program runtime is active ($AC_CYCLE_TIME)

Bit 2 = 0

No measurement of tool operating time

Bit 2 = 1

Measurement of tool operating time is active ($AC_CUTTING_TIME)

Bit 3

Reserved

Bits 4,5 only when bit 0, 1, 2 = 1:

Bit 4 = 0 No measurement with active dry run feed

Bit 4 = 1 Measurement also with active dry run feed

Bit 5 = 0 No measurement with program test

Bit 5 = 1 Measurement also with program test

Bit 6 only when Bit 1 = 1:

Bit 6 = 0

Delete $AC_CYCLE_TIME also with start by ASUB and PROG_EVENTs

Bit 6 = 1

$AC_CYCLE_TIME is not deleted on start by ASUB and PROG_EVENTs.

Bit 7 only when bit 2 = 1:

Bit 7 = 0 $AC_CUTTING_TIME counts only with active tool

Bit 7 = 1 $AC_CUTTING_TIME counts irrespective of tool

Bits 8 only when bit 1 = 1

Bit 8 = 0

$AC_CYCLE_TIME is not deleted on jumping to program start with GOTOS

Bit 8 = 1

$AC_CYCLE_TIME is deleted on jumping to program start with GOTOS.

Bit 9 only when bits 0, 1 = 1:

Bit 9 = 0

$AC_OPERATING_TIME, $AC_CYCLE_TIME: No measurement with override = 0.

Bit 9 = 1

$AC_OPERATING_TIME, $AC_CYCLE_TIME: Measurement also with override = 0.

Bits 10 to 31

Reserved

27880	PART_COUNTER			C09	K1
-	Activation of workpiece counter			DWORD	Reset
-					
-	-	0x0,0x0,0x0,0x0,0x0,0x0,0x0,0x0,0x0,0x0...	0	0x0FFFF	3/2

Description: The part counters can be configured with this machine data.
Note: with bit 0 = 1 and $AC_REQUIRED_PARTS smaller than 0 all workpiece counts
activated in this MD are frozen at the status reached.
Meaning of the individual bits:
Bits 0 - 3:Activating $AC_REQUIRED_PARTS

Bit 0 = 1:Counter $AC_REQUIRED_PARTS is activated
Further significance of bits 1-3 only when bit 0 =1 and $AC_REQUIRED_PARTS > 0:
Bit 1 = 0:Alarm/VDI output if $AC_ACTUAL_PARTS corresponds to $AC_REQUIRED_PARTS
Bit 1 = 1:Alarm/VDI output if $AC_SPECIAL_PARTS corresponds to $AC_REQUIRED_PARTS
Bit 2Reserved!
Bit 3Reserved!
Bits 4 - 7:Activating $AC_TOTAL_PARTS

Bit 4 = 1:Counter $AC_TOTAL_PARTS is active
Further meaning of bits 5-7 only when bit 4 =1 and $AC_REQUIRED_PARTS > 0:
Bit 5 = 0:Counter $AC_TOTAL_PARTS is incremented by 1 with a VDI output of M02/M30
Bit 5 = 1:Counter $AC_TOTAL_PARTS is incremented by 1 with output of the M command from MD PART_COUNTER_MCODE[0]
Bit 6 = 0:$AC_TOTAL_PARTS also active with program test/block search
Bit 7 = 1:counter $AC_TOTAL_PARTS is incremented by 1 when jumping back with GOTOS
Bits 8 - 11:Activating $AC_ACTUAL_PARTS

Bit 8 = 1:Counter $AC_ACTUAL_PARTS is active
Further significance of bits 9-11 only when bit 8 =1 and $AC_REQUIRED_PARTS > 0:
Bit 9 = 0:Counter $AC_ACTUAL_PARTS is incremented by 1 with a VDI output of M02/M30
Bit 9 = 1:Counter $AC_ACTUAL_PARTS is incremented by 1 with output of the M command from MD PART_COUNTER_MCODE[1]
Bit 10 = 0:$AC_ACTUAL_PARTS also active with program test/block search
Bit 10 = 1:No machining $AC_ACTUAL_PARTS with program test/block search
Bit 11 = 1:counter $AC_ACTUAL_PARTS is incremented by 1 when jumping bakc with GOTOS
Bit 12 - 15:Activating $AC_SPECIAL_PARTS

Bit 12 = 1:Counter $AC_SPECIAL_PARTS is active
Further significance of bits 13-15 only when bit 12 =1 and $AC_REQUIRED_PARTS > 0:
Bit 13 = 0:Counter $AC_SPECIAL_PARTS is incremented by 1 with a VDI output of M02/M30
Bit 13 = 1:Counter $AC_SPECIAL_PARTS is incremented by 1 with output of the

M command from MD PART_COUNTER_MCODE[2]
Bit 14 = 0:$AC_SPECIAL_PARTS also active with program test/block search
Bit 14 = 1:No machining $AC_SPECIAL_PARTS with program test/block search
Bit 15 = 1:counter $AC_SPECIAL_PARTS is incremented by 1 when jumping back with GOTOS
Related to:
MD27882 $MC_PART_COUNTER_MCODE

27882	PART_COUNTER_MCODE			C09	K1
-	Workpiece counting with user-defined M command			BYTE	PowerOn
-					
-	3	2, 2, 2,2, 2, 2,2, 2, 2,2, 2, 2...	0	99	3/2

Description: If part counting is activated via MD27880 $MC_PART_COUNTER, the count pulse can be triggered by a special M command.
Only then are the values defined here taken into account:
Meaning:
The part counters are incremented by 1 in the NST signal output of the M command described, where:
MD27882 $MC_PART_COUNTER_MCODE[0] for $AC_TOTAL_PARTS
MD27882 $MC_PART_COUNTER_MCODE[1] for $AC_ACTUAL_PARTS
MD27882 $MC_PART_COUNTER_MCODE[2] for $AC_SPECIAL_PARTS

27900	REORG_LOG_LIMIT			EXP, C02	-
-	Percentage of IPO buffer for enabling log file			BYTE	PowerOn
-					
-	-	1,1,1,1,1,1,1,1,1,1,1,1,1,1,1,1	-	-	0/0

Description: The machine data defines the percentage of the IPO buffer above which data in the REORG LOG memory can be released in stages, if the block preparation has been interrupted due to an overflow of the REORG LOG data memory.
The released data are no longer available to the REORG function (References: /FB /, K1, "Mode Groups, Channels, Program Operation Mode").
A consequence of this status is that a further REORG command is cancelled with an error message.
If the status of "non-reorganizability" occurs, warning 15110 is output. The output of the warning can be suppressed by enabling the highest significant bit. The bit is set by adding the value 128 to the input value in REORG_LOG_LIMIT.
In addition to the instructions of the NC blocks, the size of the IPO buffer and the REORG data memory also affect the frequency of data release.
Related to:
MD28000 $MC_MM_REORG_LOG_FILE_MEM
(memory size for REORG)
MD28060 $MC_MM_IPO_BUFFER_SIZE
(number of blocks in the IPO buffer)

27920	TIME_LIMIT_NETTO_INT_TASK			EXP, C01	-
s	Runtime limit of interpreter subtask			DOUBLE	PowerOn
-					
-	-	0.005,0.005,0.005,0.005,0.005,0.005...	0.001	0.100	7/0

Description: With MD27920 $MC_TIME_LIMIT_NETTO_INT_TASK, the maximum runtime of the interpreter subtask is set. The interpreter subtask is started from the preprocessing task. If the interpreter task does not end on its own within the time set with MD27920 $MC_TIME_LIMIT_NETTO_INT_TASK, it will be stopped and continued after a preprocessing cycle.

2.3.6 Channel-specific memory settings

28000	MM_REORG_LOG_FILE_MEM			EXP, C02	V2,K1
-	Memory space for REORG (DRAM)			DWORD	PowerOn
-					
-	-	100,100,100,100,100,100,100,100,100,100...	1	500	0/0

Description: Definition of the size (in kbyte) of the dynamic memory for the REORG-LOG data. The size of the memory determines the quantity of the data available for the function REORG.

References:

/FB/, K1, "Mode Groups, Channel, Program Operation"

28010	MM_NUM_REORG_LUD_MODULES			EXP, C02	V2,K1
-	Number of blocks for local user variables in REORG (DRAM)			DWORD	PowerOn
-					
-	-	8,8,8,8,8,8,8,8,8,8,8,8,8,8,8,8	0	SLMAXNUMBER OF_USERMODULES	1/1

Description: Defines the number of additional LUD data blocks available for the function REORG (see Description of Functions, Channels, Mode Groups, Program Operation (K1)).

This value can be 0 if the function REORG is not used. The CNC always opens 12 LUD data blocks, of which 8 are used for NC programs and 4 for the ASUBs.

An LUD data block is needed for each NC program and ASUB in which a local user variable is defined. This value may have to be increased for the function REORG if a large IPO buffer is present and a large number of short NC programs in which LUD variables are defined are active (prepared NC blocks of the programs are located in the IPO buffer).

An LUD data block is needed for each of these programs. The size of the reserved memory is affected by the number of LUDs per NC program and their individual memory requirements. The LUD data blocks are stored in the dynamic memory.

The memory requirement for managing the blocks for local user variables with REORG can be determined as follows:

The size of the LUD blocks depends on the number of active LUDs and their data type. The memory for the LUD blocks is limited by the MD28000 $MC_MM_REORG_LOG_FILE_MEM (memory size for REORG).

28020	MM_NUM_LUD_NAMES_TOTAL			C02	V2,K1
-	Number of local user variables (DRAM)			DWORD	PowerOn
-					
-	-	400,400,400,400,400, 400,400,400,400...	0	32000	1/1

Description: Defines the number of variables for the local user data (LUD) which are permitted to exist in the active sections of the program. Approximately 150 bytes of memory per variable are reserved for the names of the variables and the variable values. The memory required for the variable value is equal to the size of the data type. If the total of the local user variables from the active main program and the related subprograms is larger than the defined limit, the variables which are over the limit are not accepted during execution of the program. Dynamic memory is used for the variable names and variable values.

Overview of the memory used by the data types:

Data type	Memory used
REAL	8 bytes
INT	4 bytes
BOOL	1 byte
CHAR	1 byte
STRING	1 byte per character, 200 characters per string are possible
AXIS	4 bytes
FRAME	400 bytes

28040	MM_LUD_VALUES_MEM			C02	V2,K1
-	Memory space for local user variables (DRAM)			DWORD	PowerOn
-					
-	-	50,50,50,50,50,50,50, 50,50,50,50,50,50...	0	32000	1/1

Description: This MD defines the amount of memory space available for LUD variables.
The maximum number of available LUDs is given by one of the limit values of MD28020 $MC_MM_NUM_LUD_NAMES_TOTAL or MD28040 $MC_MM_LUD_VALUES_MEM.
The memory defined here is subdivided into (MD28040 $MC_MM_LUD_VALUES_MEM * 1024) / MD18242 $MN_MM_MAX_SIZE_OF_LUD_VALUE blocks, and allocated to part programs which request memory. Each part program that contains at least one definition of an LUD variable or call parameters uses at least one such block.
It should be remembered that several part programs requiring memory can be open simultaneously in the NCK. The number depends on the type of programming, the program length, and the size of the internal NCK block memory upwards of (MD28060 $MC_MM_IPO_BUFFER_SIZE, MD28070 $MC_MM_NUM_BLOCKS_IN_PREP).
Related to:
MD28020 $MC_MM_NUM_LUD_NAMES_TOTAL
(number of local user variables (DRAM))

28050	MM_NUM_R_PARAM			C02	K1
-	Number of channel-specific R parameters (SRAM)			DWORD	PowerOn
-					
-	-	300	0	32535	0/0

Description: Defines the number of R parameters available in the channel. A maximum of 32535 R parameters are available per channel. This machine data reserves 8 bytes of buffered user memory per R parameter.
R parameters have a considerably lower management overhead in comparison to LUD and GUD variables.
Attention:
The buffered data are lost when this machine data is changed!

28060	MM_IPO_BUFFER_SIZE			C02	B1,K1
-	Number of NC blocks in IPO buffer (DRAM)			DWORD	PowerOn
-					
802d-cu3	-	100	2	100	0/0
802d-ng2	-	50	2	50	0/0
802d-ng3	-	100	2	100	0/0
802d-tm1	-	20	2	20	0/0
802d-tm2	-	50	2	50	0/0
802d-tm3	-	100	2	100	0/0

Description: Defines the number of blocks for the interpolation buffer. This buffer contains prepared NC blocks available for the interpolation. A number of kbytes of the dynamic user memory are reserved for each NC block. The data also limits the number of blocks for look ahead consideration of speed limitation for the LookAhead function.
MD28060 $MC_MM_IPO_BUFFER_SIZE is set by the system.
Related to:
MD28070 $MC_MM_NUM_BLOCKS_IN_PREP
(number of blocks for block preparation)

28070	MM_NUM_BLOCKS_IN_PREP			EXP, C02	B1,K1
-	Number of blocks for block preparation (DRAM)			DWORD	PowerOn
-					
802d-cu3	-	65	50	500	1/1
802d-ng2	-	50,50,50,50,50,50,50, 50,50,50,50,50,50...	20	500	0/0
802d-ng3	-	50,50,50,50,50,50,50, 50,50,50,50,50,50...	20	500	0/0
802d-tm1	-	50,50,50,50,50,50,50, 50,50,50,50,50,50...	20	500	0/0
802d-tm2	-	50,50,50,50,50,50,50, 50,50,50,50,50,50...	20	500	0/0
802d-tm3	-	65	50	500	1/1

Description: Defines the number of NC blocks available for NC block preparation. This figure is determined mainly by the system software and is used largely for optimization. Approximately 10 Kbytes of dynamic memory is reserved per NC block.
Related to:
MD28060 $MC_MM_IPO_BUFFER_SIZE
(number of NC blocks with IPO buffer)

28080	MM_NUM_USER_FRAMES			C11, C02	K1,K2
-	Number of settable frames (SRAM)			DWORD	PowerOn
-					
802d-cu3	-	7	5	100	1/1
802d-ng2	-	7	5	100	1/1
802d-ng3	-	7	5	100	1/1
802d-tm1	-	7	5	100	0/0
802d-tm2	-	7	5	100	0/0
802d-tm3	-	7	5	100	0/0

Description: Defines the number of predefined user frames. Approximately 400 bytes of backup memory are reserved per frame.
The standard system configuration provides four frames for G54 to G57 and one frame for G500.
Special cases:
The backup data are lost if this machine data is altered!

28081	MM_NUM_BASE_FRAMES			C02	M5,K2
-	Number of base frames (SRAM)			DWORD	PowerOn
-					
-	-	3	0	16	1/1

Description: Number of channel-specific base frames per channel.
The value corresponds to the number of field elements for the predefined field $P_CHBFR[].
Buffered memory is reserved for this.

28082	MM_SYSTEM_FRAME_MASK			C02	M5,K2,W1
-	System frames (SRAM)			DWORD	PowerOn
-					
802d-cu3	-	0x7A1,0x7A1,0x7A1,0x7A1,0x7A1,0x7A1,0x7A1...	0	0x00000FFF	1/1
802d-ng2	-	0x21,0x21,0x21,0x21,0x21,0x21,0x21,0x21...	0	0x00000FFF	1/1
802d-ng3	-	0x21,0x21,0x21,0x21,0x21,0x21,0x21,0x21...	0	0x00000FFF	1/1
802d-tm1	-	0x7A1,0x7A1,0x7A1,0x7A1,0x7A1,0x7A1,0x7A1...	0	0x00000FFF	1/1
802d-tm2	-	0x7A1,0x7A1,0x7A1,0x7A1,0x7A1,0x7A1,0x7A1...	0	0x00000FFF	1/1
802d-tm3	-	0x7A1,0x7A1,0x7A1,0x7A1,0x7A1,0x7A1,0x7A1...	0	0x00000FFF	1/1

Description: Bit mask for configuring channel-specific system frames included in the channel.
Bit 0: System frame for setting actual value and scratching
Bit 1: System frame for external work offset
Bit 2: System frame for TCARR aund PAROT
Bit 3: System frame for TOROT and TOFRAME
Bit 4: System frame for workpiece reference points
Bit 5: System frame for cycles
Bit 6: System frame for transformations

Bit 7:System frame $P_ISO1FR for ISO G51.1 Mirror
Bit 8:System frame $P_ISO2FR for ISO G68 2DROT
Bit 9:System frame $P_ISO3FR for ISO G68 3DROT
Bit 10:System frame $P_ISO4FR for ISO G51 Scale
Bit 11: System frame $P_RELFR for relative coordinate systems

28083	MM_SYSTEM_DATAFRAME_MASK			C02	-
-	System frames (SRAM)			DWORD	PowerOn
-					
-	-	0xF9F,0xF9F,0xF9F,0xF9F,0xF9F,0xF9F,0xF9F...	0	0x00000FFF	1/1

Description: Bit mask for configuring channel-specific system frames in the data storage (SRAM).
Bit 0: System frame for setting actual value and scratching
Bit 1: System frame for external work offset
Bit 2: System frame for TCARR aund PAROT
Bit 3: System frame for TOROT and TOFRAME
Bit 4: System frame for workpiece reference points
Bit 5: System frame for cycles
Bit 6: System frame for transformations
Bit 7:System frame $P_ISO1FR for ISO G51.1 Mirror
Bit 8:System frame $P_ISO2FR for ISO G68 2DROT
Bit 9:System frame $P_ISO3FR for ISO G68 3DROT
Bit 10:System frame $P_ISO4FR for ISO G51 Scale
Bit 11: System frame $P_RELFR for relative coordinate systems

28150	MM_NUM_VDIVAR_ELEMENTS			C02	A2,P3 pl,P3 sl
-	Number of elements for writing PLC variables			DWORD	PowerOn
-					
-	-	3	0	32000	0/0

Description: The MD defines the number of elements which the user has available for writing PLC variables ($A_DBx=...). This number also applies to block search, but not to synchronized actions.
The memory requirement is ca. 24 bytes per element.
One element is needed for each write action when writing PLC variables in quick succession.
If more writing actions are to be performed than elements are available, block transport must be guaranteed (trigger preprocessing stop, if required)
However, the number of elements can be reduced if the accessing actions are made separately (block transport has already been accomplished). Writing accesses (var=$A_DBx) are unlimited.

28200	MM_NUM_PROTECT_AREA_CHAN			C02, C06, C09	A3
-	Number of files for channel-specific protection zones (SRAM)			DWORD	PowerOn
-					
802d-cu3	-	0,0,0,0,0,0,0,0,0,0,0,0,0,0,0,0	0	10	1/1
802d-ng2	-	0,0,0,0,0,0,0,0,0,0,0,0,0,0,0,0	0	10	1/1
802d-ng3	-	0,0,0,0,0,0,0,0,0,0,0,0,0,0,0,0	0	10	1/1
802d-tm1	-	0,0,0,0,0,0,0,0,0,0,0,0,0,0,0,0	0	10	-1/2
802d-tm2	-	0,0,0,0,0,0,0,0,0,0,0,0,0,0,0,0	0	10	-1/2
802d-tm3	-	0,0,0,0,0,0,0,0,0,0,0,0,0,0,0,0	0	10	-1/2

Description: This machine data defines how many blocks are set up for channel-specific protection zones.

Related to:

MD28210 $MC_MM_NUM_PROTECT_AREA_ACTIVE

(number of simultaneously active protection zones)

MD18190 $MN_MM_NUM_PROTECT_AREA_NCK

(number of files for machine-related protection zones (SRAM))

References:

/FB/, A3, "Axis/Contour Tunnel Monitoring, Protection Zones"

28210	MM_NUM_PROTECT_AREA_ACTIVE			C11, C02, C06, C09	A3
-	Number of simultaneously active protection zones in one channel			DWORD	PowerOn
-					
802d-cu3	-	0,0,0,0,0,0,0,0,0,0,0,0,0,0,0,0	0	10	1/1
802d-ng2	-	0,0,0,0,0,0,0,0,0,0,0,0,0,0,0,0	0	10	1/1
802d-ng3	-	0,0,0,0,0,0,0,0,0,0,0,0,0,0,0,0	0	10	1/1
802d-tm1	-	0,0,0,0,0,0,0,0,0,0,0,0,0,0,0,0	0	10	-1/2
802d-tm2	-	0,0,0,0,0,0,0,0,0,0,0,0,0,0,0,0	0	10	-1/2
802d-tm3	-	0,0,0,0,0,0,0,0,0,0,0,0,0,0,0,0	0	10	-1/2

Description: This machine data defines the number of protection zones that may be activated simultaneously for each channel.

It is not practical to enter a numerical value higher than MD18190 $MN_MM_NUM_PROTECT_AREA_NCK + MD28200 $MC_MM_NUM_PROTECT_AREA_CHAN.

Related to:
MD28200 $MC_MM_NUM_PROTECT_AREA_CHAN
(Number of blocks for channel-specific protection zones)
MD18190 $MN_MM_NUM_PROTECT_AREA_NCK
(Number of files for machine-related protection zones (SRAM))
References:
/FB1/ Function Manual Basic Functions; Axis Monitoring, Protection Zones (A3)

28212	MM_NUM_PROTECT_AREA_CONTOUR			C11, C02, C06, C09	A3
-	Elements for active protection zones (DRAM)			DWORD	PowerOn
-					
802d-cu3	-	30,30,30,30,30,30,30, 30,30,30,30,30,30...	0	50	1/1
802d-ng2	-	30,30,30,30,30,30,30, 30,30,30,30,30,30...	0	50	1/1
802d-ng3	-	30,30,30,30,30,30,30, 30,30,30,30,30,30...	0	50	1/1
802d-tm1	-	30,30,30,30,30,30,30, 30,30,30,30,30,30...	0	50	-1/2
802d-tm2	-	30,30,30,30,30,30,30, 30,30,30,30,30,30...	0	50	-1/2
802d-tm3	-	30,30,30,30,30,30,30, 30,30,30,30,30,30...	0	50	-1/2

Description: This machine data defines for each channel how many internal contour elements in total are held available for active protection zones.
Dynamic memory is used.
The MD affects the memory requirements for the activated protection zones.
This machine data is active only if MD28210 $MC_MM_NUM_PROTECT_AREA_ACTIVE is not equal to 0.

28254	MM_NUM_AC_PARAM			C02	-
-	Dimension of $AC_PARAM.			DWORD	PowerOn
-					
802d-cu3	-	50,50,50,50,50,50,50, 50,50,50,50,50,50...	0	20000	2/2
802d-ng2	-	50,50,50,50,50,50,50, 50,50,50,50,50,50...	0	20000	1/1
802d-ng3	-	50,50,50,50,50,50,50, 50,50,50,50,50,50...	0	20000	1/1
802d-tm1	-	0,0,0,0,0,0,0,0,0,0	0	20000	0/0
802d-tm2	-	0,0,0,0,0,0,0,0,0,0	0	20000	0/0
802d-tm3	-	0,0,0,0,0,0,0,0,0,0	0	20000	0/0

Description: Panel size of $AC_PARAM.

28255	MM_BUFFERED_AC_PARAM			C02	2.3,6.1
-	$AC_PARAM[] is stored in SRAM.			DWORD	PowerOn
-					
802d-cu3	-	0,0,0,0,0,0,0,0,0,0,0,0,0,0,0,0	0	1	2/2
802d-ng2	-	0,0,0,0,0,0,0,0,0,0,0,0,0,0,0,0	0	1	1/1
802d-ng3	-	0,0,0,0,0,0,0,0,0,0,0,0,0,0,0,0	0	1	1/1
802d-tm1	-	0,0,0,0,0,0,0,0,0,0,0,0,0,0,0,0	0	1	0/0
802d-tm2	-	0,0,0,0,0,0,0,0,0,0,0,0,0,0,0,0	0	1	0/0
802d-tm3	-	0,0,0,0,0,0,0,0,0,0,0,0,0,0,0,0	0	1	0/0

Description: $AC_PARAM[] is stored in SRAM.

28256	MM_NUM_AC_MARKER			C02	2.3,6.1
-	Dimension of $AC_MARKER			DWORD	PowerOn
-					
802d-cu3	-	8,8,8,8,8,8,8,8,8,8,8,8,8,8,8,8	0	20000	2/2
802d-ng2	-	8,8,8,8,8,8,8,8,8,8,8,8,8,8,8,8	0	20000	1/1
802d-ng3	-	8,8,8,8,8,8,8,8,8,8,8,8,8,8,8,8	0	20000	1/1
802d-tm1	-	0,0,0,0,0,0,0,0,0,0	0	20000	0/0
802d-tm2	-	0,0,0,0,0,0,0,0,0,0	0	20000	0/0
802d-tm3	-	0,0,0,0,0,0,0,0,0,0	0	20000	0/0

Description: Number of channel-specific markers $AC_MARKER for motion-synchronous actions.
DRAM or SRAM is required depending on MD28257 $MC_MM_BUFFERED_AC_MARKER.

28257	MM_BUFFERED_AC_MARKER			C02	2.3,6.1
-	$AC_MARKER[] is stored in SRAM.			DWORD	PowerOn
-					
802d-cu3	-	0,0,0,0,0,0,0,0,0,0,0,0,0,0,0,0	0	1	2/2
802d-ng2	-	0,0,0,0,0,0,0,0,0,0,0,0,0,0,0,0	0	1	1/1
802d-ng3	-	0,0,0,0,0,0,0,0,0,0,0,0,0,0,0,0	0	1	1/1
802d-tm1	-	0,0,0,0,0,0,0,0,0,0,0,0,0,0,0,0	0	1	0/0
802d-tm2	-	0,0,0,0,0,0,0,0,0,0,0,0,0,0,0,0	0	1	0/0
802d-tm3	-	0,0,0,0,0,0,0,0,0,0,0,0,0,0,0,0	0	1	0/0

Description: $AC_MARKER[] is stored in SRAM.

28274	MM_NUM_AC_SYSTEM_PARAM			EXP, C02	-
-	Number of $AC_SYSTEM_ PARAM for motion-synchronous actions			DWORD	PowerOn
-					
802d-cu3	-	0,0,0,0,0,0,0,0,0,0,0,0,0,0,0,0	0	20000	2/2
802d-ng2	-	0,0,0,0,0,0,0,0,0,0,0,0,0,0,0,0	0	20000	1/1
802d-ng3	-	0,0,0,0,0,0,0,0,0,0,0,0,0,0,0,0	0	20000	1/1
802d-tm1	-	0,0,0,0,0,0,0,0,0,0,0,0,0,0,0,0	0	20000	0/0
802d-tm2	-	0,0,0,0,0,0,0,0,0,0,0,0,0,0,0,0	0	20000	0/0
802d-tm3	-	0,0,0,0,0,0,0,0,0,0,0,0,0,0,0,0	0	20000	0/0

Description: Number of $AC_SYSTEM_ PARAM parameters for motion-synchronous actions.
Depending on MD28255 $MC_MM_BUFFERED_AC_PARAM, DRAM or SRAM is required.
Reserved for SIEMENS applications.

28276	MM_NUM_AC_SYSTEM_MARKER			EXP, C02	-
-	Number of $AC_SYSTEM_MARKER for motion-synchronous actions			DWORD	PowerOn
-					
802d-cu3	-	0,0,0,0,0,0,0,0,0,0,0,0,0,0,0,0	0	20000	2/2
802d-ng2	-	0,0,0,0,0,0,0,0,0,0,0,0,0,0,0,0	0	20000	1/1
802d-ng3	-	0,0,0,0,0,0,0,0,0,0,0,0,0,0,0,0	0	20000	1/1
802d-tm1	-	0,0,0,0,0,0,0,0,0,0,0,0,0,0,0,0	0	20000	0/0
802d-tm2	-	0,0,0,0,0,0,0,0,0,0,0,0,0,0,0,0	0	20000	0/0
802d-tm3	-	0,0,0,0,0,0,0,0,0,0,0,0,0,0,0,0	0	20000	0/0

Description: Number of $AC_SYSTEM_MARKER markers for motion-synchronous actions.
Depending on MD28257 $MC_MM_BUFFERED_AC_MARKER, DRAM or SRAM is required.
Reserved for SIEMENS applications.

28290	MM_SHAPED_TOOLS_ENABLE			C01, C08, C02	-
-	Enable tool radius compensation for contour tools			BOOLEAN	PowerOn
-					
-	-	FALSE,FALSE,FALSE,FALSE,FALSE,FALSE...	-	-	0/0

Description: The function "Tool radius compensation for contour tools" is enabled with this tool.
Modification of this machine data will cause a reconfiguration of the memory.

28400	MM_ABSBLOCK			EXP, C02	K1
-	activate block display w. absolute values			DWORD	PowerOn
-					
-	-	0,0,0,0,0,0,0,0,0,0	0	512	2/2

Description:

Value:
0: Block display with absolute values deactivated
1: Block display with absolute values activated;
A display buffer of the following size is created:
(MD28257 $MC_MM_BUFFERED_AC_MARKER + MD28070 $MC_MM_NUM_BLOCKS_IN_PREP) * 256 bytes
>= 128:Block display with absolute values activated;
A display buffer of the following size is created:
(MD28060 $MC_MM_IPO_BUFFER_SIZE + MD28070 $MC_MM_NUM_BLOCKS_IN_PREP) * <value>

28402	MM_ABSBLOCK_BUFFER_CONF			EXP, C02	K1
-	Setting of upload buffer size			DWORD	PowerOn
-					
-	2	0, 0,0, 0,0, 0,0, 0,0, 0,0, 0,0, 0,0, 0...	0	32000	2/2

Description:

Dimensioning the size of the upload buffer:
MD28402 $MC_MM_ABSBLOCK_BUFFER_CONF[0] : Number of blocks before the current block
MD28402 $MC_MM_ABSBLOCK_BUFFER_CONF[1] : Number of blocks after the current block
The machine data is tested for the following upper / lower limits during startup:
0 <= MD28402 $MC_MM_ABSBLOCK_BUFFER_CONF[0] <= 8
0 <= MD28402 $MC_MM_ABSBLOCK_BUFFER_CONF[1] <= (MD28060 $MC_MM_IPO_BUFFER_SIZE + MD28070 $MC_MM_NUM_BLOCKS_IN_PREP)
Alarm 4152 is issued when the limits are violated.

28500	MM_PREP_TASK_STACK_SIZE			EXP, C02	K1
-	Stack size of preparation task (DRAM)			DWORD	PowerOn
-					
-	-	70,70,70,70,70,70,70, 70,70,70,70,70,70...	70	500	0/0

Description:

Defines the stack size in kbytes for the preparation task. The stack is stored in the dynamic memory.
Note:
This machine data is assigned internally by the control and must not be altered by the user.

28502	MM_INT_TASK_STACK_SIZE			EXP, C02	-
-	Stack size for interpreter subtask (kB).			DWORD	PowerOn
-					
-	-	20,20,20,20,20,20,20, 20,20,20,20,20,20...	20	40	0/0

Description:

Definition of the stack size (kByte) for the interpreter subtask.

28520	MM_MAX_AXISPOLY_PER_BLOCK			C02	B1
-	maximal number of axial polynomials per block			DWORD	PowerOn
-					
-	-	1,1,1,1,1,1,1,1,1,1	1	5	0/0

Description: Maximum number of axis polynomials which can be contained in a block.
In the standard case, each block only contains one polynomial per axis, i.e. this data can immediately be set to one.
Currently, more polynomials are only needed for the new ADIS function with G643.
In this case, this data must have a minimum value of three.

28530	MM_PATH_VELO_SEGMENTS			C02	A2,B1
-	Number of memory elements for path velocity limitation			DWORD	PowerOn
-					
802d-cu3	-	0,0,0,0,0,0,0,0,0,0,0,0,0,0,0,0	0	100	1/1
802d-ng2	-	0,0,0,0,0,0,0,0,0,0,0,0,0,0,0,0	0	100	0/0
802d-ng3	-	0,0,0,0,0,0,0,0,0,0,0,0,0,0,0,0	0	100	0/0
802d-tm1	-	0,0,0,0,0,0,0,0,0,0,0,0,0,0,0,0	0	100	0/0
802d-tm2	-	0,0,0,0,0,0,0,0,0,0,0,0,0,0,0,0	0	100	0/0
802d-tm3	-	0,0,0,0,0,0,0,0,0,0,0,0,0,0,0,0	0	100	1/1

Description: Number of memory elements available for limiting the path velocity and changing it in the block.
0 : Each block is limited by a maximum path velocity.
> 0 : If required, a profile of the permissible path velocity
; and its modification options is generated and monitored
; in the block.
; This results in a smoother axis velocity progression and
; a shorter travel time.
; MD28530 $MC_MM_PATH_VELO_SEGMENTS defines the average
; number of segments available in the block.
; The necessary setting essentially depends
; on the requirements.
The following values are recommended:
3: for G643, if only geometry axes are traversed
5: for G643, if geometry and rotary axes are traversed
5: for COMPCAD
5: for dyn. transformation
A value that is too low this may lead to additional velocity limitations if a sufficient number of blocks cannot be made available for interpolation.
MD28530 $MC_MM_PATH_VELO_SEGMENTS additionally increases the memory requirement of dyn. Look Ahead. Values higher than 5 are only practical in exceptional cases.
3 ... 5 : Recommended setting.

28533	MM_LOOKAH_FFORM_UNITS			C02	-
-	Memory for extended LookAhead			DWORD	PowerOn
-					
-	-	0,0,0,0,0,0,0,0,0,0,0,0,0,0,0,0	0	100000	0/0

Description: The machine data is used to configure the work memory for extended LookAhead.
The MD scales the value defined internally through MD28060 $MC_MM_IPO_BUFFER_SIZE, MD28520 $MC_MM_MAX_AXISPOLY_PER_BLOCK, MD28530 $MC_MM_PATH_VELO_SEGMENTS, MD28535 $MC_MM_FEED_PROFILE_SEGMENTS, MD28540 $MC_MM_ARCLENGTH_SEGMENTS).
Its practical size depends on the part program, the block lengths, the axis dynamics, and an active kinematic transformation.
The MD should only be set for those channels in which free-form surfaces are also machined.
0 : default LookAhead is active.
> 0 : extended LookAhead is active if switched on by MD20443 $MC_LOOKAH_FFORM.
The guide value for free-form surface applications is: 18..20

28540	MM_ARCLENGTH_SEGMENTS			C02	B1
-	Number of memory elements for arc length function representation			DWORD	PowerOn
-					
802d-cu3	-	0,0,0,0,0,0,0,0,0,0,0,0,0,0,0,0	0	100	1/1
802d-ng2	-	0,0,0,0,0,0,0,0,0,0,0,0,0,0,0,0	0	100	0/0
802d-ng3	-	0,0,0,0,0,0,0,0,0,0,0,0,0,0,0,0	0	100	0/0
802d-tm1	-	0,0,0,0,0,0,0,0,0,0,0,0,0,0,0,0	0	100	0/0
802d-tm2	-	0,0,0,0,0,0,0,0,0,0,0,0,0,0,0,0	0	100	0/0
802d-tm3	-	0,0,0,0,0,0,0,0,0,0,0,0,0,0,0,0	0	100	1/1

Description: Number of memory elements available for the arc length function for parameterizing polynomials.
If this machine data is equal to zero, a fixed interval division is used to represent the arc length function. In this case, the calculated function is only tangent-continuous. This can lead to discontinuities in the axis accelerations.
If the function G643 is used for smoothing and/or COMPCAD, this MD should be assigned a value of at least 10. In this case, the calculated function also has a constant curvature which results in a smoother progression of the path velocity, as well as the axis velocities and accelerations.
Values substantially larger than 10 are only practical in exceptional cases.
Not only the value of MD28540 $MC_MM_ARCLENGTH_SEGMENTS but also that of MD20262 $MC_SPLINE_FEED_PRECISION are crucial for the accuracy.

28560	MM_SEARCH_RUN_RESTORE_MODE			C02	K2
-	Data restore after simulation			DWORD	PowerOn
-					
-	-	0x0,0x0,0x0,0x0,0x0,0x0,0x0,0x0,0x0,0x0...	0	0x00000001	1/1

Description: Bit mask to restore data after abort of a simulated program execution. The following applies:
Bit 0: All frames in the data storage are restored.

28600	MM_NUM_WORKAREA_CS_GROUPS			C02	-
-	Number of coordinate system-specific operating range limits			DWORD	PowerOn
-					
-	-	0,0,0,0,0,0,0,0,0,0,0,0,0,0,0,0	0	10	0/0

Description: Number of data blocks in the channel that are created for coordinate system-specific operating range limits.
It indicates the maximum value of the 1st index of system variable $P_WORKAREA_CS...[WALimNo, Ax]. It furthermore defines the number of the programmable G functions "WALCS1, WALCS2, ... WALCS10" as well as the maximum value in system variable $AC_WORKAREA_CS_GROUP".
= 0: Function "Monitoring of coordinate system-specific operating range limits" cannot be activated.

2.4 Axis-specific machine data

Number	Identifier			Display filters	Reference
Unit	Name			Data type	Active
Attributes					
System	Dimension	Default value	Minimum value	Maximum value	Protection

Description: Description

2.4.1 Configuration

30100	CTRLOUT_SEGMENT_NR			EXP, A01	G2,S9
-	Setpoint assignment: bus segment number			BYTE	PowerOn
-					
-	1	5	0	5	2/2

Description: In this MD enter the number of the bus segment through which the output is addressed.
0: Local bus (for 802D MCPA)
1: SIMODRIVE611D drive bus for SINUMERIK 840D/810D (1st DCM)
2: reserved (previously local P bus)
3: reserved (previously 611D bus, 2nd DCM)
4: reserved (virtual buses)
5: PROFIBUS/PROFINET (e.g. SINUMERIK 840Di)
6: reserved (same effect as 5)

30110	CTRLOUT_MODULE_NR			A01, A11, -	G2,S9
-	Setpoint assignment: module number			BYTE	PowerOn
-					
802d-cu3	1	1,2,3,4,5,6,7,8,9,10,11,12,13,14,15,16,17,18...	1	31	2/2
802d-ng2	1	3,2,4,1	1	31	2/2
802d-ng3	1	3,2,4,1	1	31	2/2
802d-tm1	1	2,3,4,1	1	31	2/2
802d-tm2	1	2,3,4,1	1	31	2/2
802d-tm3	1	2,3,4,1	1	31	2/2

Description: Enter in this MD the number of the module within a bus segment through which the output is addressed.
For axes on the PROFIBUS/PROFINET, the number of the drive assigned with MD13050 $MN_DRIVE_LOGIC_ADDRESS must be entered here (MD30110 $MA_CTRLOUT_MODULE_NR=n consequently points to MD13050 $MN_DRIVE_LOGIC_ADDRESS[n]).

30120	CTRLOUT_NR			EXP, A01, -	G2
-	Setpoint assignment: Setpoint output on drive submodule/ module			BYTE	PowerOn
-					
-	1	1	1	3	2/2

Description: Number of the output on a module, through which the setpoint output is addressed.
Index [n] of the machine date has the following coding: [setpoint branch]: 0

30130	CTRLOUT_TYPE			A01, A11	G2,M3,S9
-	Output type of setpoint			BYTE	PowerOn
-					
-	1	0	0	3	2/2

Description: The type of speed setpoint output is entered in this MD:
0: Simulation (no hardware required)
1: Setpoint output active (differentiated by hardware configuration)
Index [n] of the machine date has the following coding: [setpoint branch]: 0.

30132	IS_VIRTUAL_AX			A01	M3,TE1,TE3
-	Axis is a virtual axis			BOOLEAN	PowerOn
CTEQ					
-	1	FALSE	-	-	1/1

Description: Virtual axis. An axis that is also interpolated in follow-up mode. (Electronic transfer technology; virtual and real master values.)
This MD is the successor to MD30130 $MA_CTRLOUT_TYPE=4. MD30130 $MA_CTRLOUT_TYPE=0 and MD30132 $MA_IS_VIRTUAL_AX=1 must now be used instead of MD30130 $MA_CTRLOUT_TYPE=4.
Related to:
MD30130 $MA_CTRLOUT_TYPE

30134	IS_UNIPOLAR_OUTPUT			A01	G2
-	Setpoint output is unipolar			BYTE	PowerOn
-					
-	1	0	0	2	2/2

Description: Only for PROFIdrive, special application of analog additional drives:
Unipolar output driver (for unipolar analog drive actuator):
Only positive set speeds are supplied to the drive, the sign of the set speed is separately output in its own digital control signal.
Input value "0":
Bipolar output with pos./neg. set speed (this is the normal case)
Input value "1":
0. Digital bit = servo enable
1. Digital bit = neg. direction of travel
Input value "2": (linking of enable and direction of travel signals):
0. Digital bit = servo enable pos. direction of travel
1. Digital bit = servo enable neg. direction of travel

30200	NUM_ENCS			A01, A02, -	G2,R1,Z1
-	Number of encoders			BYTE	PowerOn
-					
-	-	1	0	1	2/2

Description:
0: without measuring system (possible with spindle)
1: spindle / axis with measuring system (in motor or directly)

30210	ENC_SEGMENT_NR			EXP, A01, A02	G2
-	Actual value assignment: bus segment number.			BYTE	PowerOn
-					
-	1	5, 5	5	5	-1/2

Description:
Number of the bus segment, through which the encoder is addressed.
The bus segments must be firmly assigned to the control systems.
0: reserved (previously local bus)
1: SIMODRIVE611D drive bus for SINUMERIK 840D/810D (1st DCM)
2: reserved (previously local P bus)
3: reserved (previously 611D bus, 2nd DCM)
4: reserved (virtual buses)
5: PROFIBUS/PROFINET (e.g. SINUMERIK 840Di)
6: reserved (same effect as 5)
Index [n] has the following coding [Encodernr.]: 0 or 1

30220	ENC_MODULE_NR			A01, A02, A11	G2
-	Actual value assignment: Drive number/measuring circuit number			BYTE	PowerOn
-					
802d-cu3	1	1, 1,2, 2,3, 3,4, 4,5, 5,6, 6,7, 7...	1	31	2/2
802d-ng2	1	3, 3,2, 2,4, 4,1, 1	1	31	2/2
802d-ng3	1	3, 3,2, 2,4, 4,1, 1	1	31	2/2
802d-tm1	1	2, 2,3, 3,4, 4,1, 1	1	31	2/2
802d-tm2	1	2, 2,3, 3,4, 4,1, 1	1	31	2/2
802d-tm3	1	2, 2,3, 3,4, 4,1, 1	1	31	2/2

Description:
The number of the module within a bus segment (MD30210 $MA_ENC_SEGMENT_NR[n]) through which the encoder is addressed must be entered in the MD.
For axes on PROFIBUS/PROFINET, the number of the drive assigned via MD13050 $MN_DRIVE_LOGIC_ADDRESS must be entered here (MD30220 $MA_ENC_MODULE_NR=n consequently points to MD13050 $MN_DRIVE_LOGIC_ADDRESS[n]).
The index[n] of the machine data has the following coding:
[Encoder no.]: 0 or 1
Related to:
MD30110 $MA_CTRLOUT_MODULE_NR[n]
(setpoint assignment: drive number/module number)

30230	ENC_INPUT_NR			A01, A02, A11, -	G2,S9
-	Actual value assignm.: Input on drive module/meas. circuit board			BYTE	PowerOn
-					
-	1	1, 2	1	2	2/2

Description: For PROFIdrive:
Number of the encoder within the PROFIdrive message frame through which the encoder is addressed.
For example telegram 103: 1 (=G1_ZSW etc.) or 2 (=G2_ZSW etc.).
The index[n] of the machine data has the following coding:
[Encodernr.]: 0 or 1
If an input is selected, to which no encoder is connected, alarm 300008 "Measuring circuit not available on drive" is output.

30240	ENC_TYPE			A01, A02, A11, -	A3,,G2,R1
-	Encoder type of actual value sensing (actual position value).			BYTE	PowerOn
-					
-	1	0, 0	0	5	2/2

Description: Encoder type:
0: simulation
1: raw signal generator (high resolution)
2, 3, 5: reserved
Index [n] of the machine date has the following coding: [encoder number]: 0
4: general absolute encoder (e.g. with EnDat interface)

30242	ENC_IS_INDEPENDENT			A02, A11, -	G2,R1
-	Encoder is independent			BYTE	NEW CONF
-					
-	1	0, 0	0	3	1/1

Description: If actual value corrections performed by the NC on the encoder selected for position control are not to influence the actual value of any other encoder defined in the same axis, then the position control encoder must be declared to be "independent".
Actual value corrections include the following:
- Modulo treatment,
- Reference point approach,
- Measuring system calibration,
- PRESET

Example:
MD30200 $MA_NUM_ENCS[AX1] = 2
MD30242 $MA_ENC_IS_INDEPENDENT[0, AX1] = 0
MD30242 $MA_ENC_IS_INDEPENDENT[1, AX1] = 1
When the VDI interface has selected the first encoder for position control, the above mentioned actual value corrections will be executed on this encoder only.
When the VDI interface has selected the second encoder for position control, the above mentioned actual value corrections will be executed on both encoders.
The machine data is therefore only valid for encoders that have not been selected by the VDI interface for positon control (passive encoders).

As from SW5, the scope of functions has been extended:
MD30242 $MA_ENC_IS_INDEPENDENT = 2
The passive encoder is dependent. The active encoder changes the actual encoder value. In combination with MD35102 $MA_REFP_SYNC_ENCS = 1, the passive encoder is adjusted to the active encoder during reference point approach, but is NOT referenced.
In reference mode MD34200 $MA_ENC_REFP_MODE = 3 (distance-coded reference marks), the passive encoder is automatically referenced with the next traversing movement after zero mark distance overtravel. This is done independently of the current mode setting.
MD30242 $MA_ENC_IS_INDEPENDENT = 3
In contrast to MD30242 $MA_ENC_IS_INDEPENDENT = 1, modulo actual value corrections are executed in the passive encoder of modulo rotary axes.

30244	ENC_MEAS_TYPE			A01, A02, A11	-
-	Encoder measurement type			BYTE	PowerOn
-					
-	1	1, 1	0	1	0/0

Description:

For PROFIdrive only:
In combination with the MD13210 $MN_MEAS_TYPE = 1 (decentralized measurement), this MD can be used to set the type of axial measuring function for drives.
Encoder measurement type:
0: encoder measurement type central (global) measurement
1: encoder measurement type decentral (local) measurement

MEAS_TYPE	ENC_MEAS_TYPE	measuring sensor input used
0	0	central
0	1	central
1	0	central
1	1	decentralized

30250	ACT_POS_ABS			EXP, A02, A08	R1
-	Internal encoder position			DOUBLE	PowerOn
ODLD, -, -					
-	1	0.0, 0.0	-	-	1/1

Description:

The actual position (hardware counter status only without machine reference) is stored (in internal format display) in this MD.
At power ON (or encoder activation), it acts with:

- Absolute encoders:
  To restore the current position (in combination with the position, possibly with several meanings, buffered in the encoder).
- Incremental encoders:
  To buffer the actual value beyond power OFF when the functionality is activated MD34210 $MA_ENC_REFP_STATE = 1 or. 2 (i.e. as a reference point replacement).
  To buffer the actual value beyond power OFF when the functionality is activated MD34210 $MA_ENC_REFP_STATE = 3 (i.e. as a restored position value).

Note:

This MD is changed internally by the control during traversing movements. Loading a previously saved MD data block can therefore destroy the encoder calibration (machine position reference) of absolute encoders.

For software conversions, we recommend removing the MD data block from the old software release prior to conversion and reloading it into the new software release without moving any axis in the meantime. Protection level 1 should be set for SW 3.6; protection level 2 suffices for SW 4 and higher. The encoder calibration must be explicitly verified (controlled, calibrated) after the software conversion.

30260	ABS_INC_RATIO			EXP, A01, A02	-
-	Absolute encoder: Ratio of absolute to incremental resolution			DWORD	PowerOn
-					
-	1	4, 4	-	-	1/1

Description: Absolute track resolution in relation to the incremental signal resolution.
This MD only applies for absolute encoders:
- PROFIBUS drives:

  Absolute information XIST2 related to incremental information XIST1.

  With plausible drive parameters (e.g. for SIMODRIVE 611U: P1042/P1043 or P1044/P1045 or the relevant entries in PROFIdrive parameter p979) the value of this MD is automatically calculated and updated from drive parameters (if parameter read-out has not been deactivated by $MN_DRIVE_FUNCTION_MASK, bit2).

With plausible drive parameters (e.g. for SIMODRIVE 611U: P1042/P1043 or P1044/P1045 or the relevant entries in PROFIdrive parameter p979) the value of this MD is calculated and updated automatically from the drive parameters (provided that parameter read-out has not been disabled by MD13070 $MN_DRIVE_FUNCTION_MASK, bit2).
Unplausible drive parameters (e.g. multiplication of absolute track higher than that of the incremental signal) are rejected and replaced by the value entered in the current MD.
Unplausible input values in the current MD (e.g. value=0) are reset to the default value. In addition, alarm 26025 or 26002 is output in order to inform the user.

30270	ENC_ABS_BUFFERING			EXP, A01, A02	R1
-	Absolute encoder: Traversing range extension			BYTE	PowerOn
-					
-	1	0, 0	0	1	2/2

Description: This MD defines the way in which the absolute encoder position is buffered, and whether a traversing range extension is active on software side (exceeding the limits of the absolute value encoder range that can be displayed on the hardware).
"0" = standard = traversing range extension (compare ACT_POS_ABS) is active.
"1" = traversing range extension on software side is inactive.
When using an absolute linear scale, there will not be a traversing range overflow for mechanical reasons. This MD is therefore only valid for rotary absolute value encoders.

For rotary absolute value encoders, the traversing range that can be clearly displayed on the encoder side, is stored in MD34220 $MA_ENC_ABS_TURNS_MODULO. You can do without a traversing range extension without any problems (a hardware counter overflow that might be within the traversing range is concealed in the software via shortest-path decision):

a. in linear axes or limited rotary axes, if the actual traversing range on the load side is smaller than the traversing range on the load side that corresponds to MD34220 $MA_ENC_ABS_TURNS_MODULO.

b. in endlessly turning rotary axes (ROT_IS_MODULO = TRUE), if the absolute encoder is connected on the load side (no gear to be considered) or if "without remainder" can be calculated:

Number of rotations on the load side = ENC_ABS_TURNS_MODULO * gear ratio

(Example: ENC_ABS_TURNS_MODULO = 4096 encoder rotations, gear 25:32, i.e. number of rotations on load side = 4096*(25/32)=3200).

Notice:

If you do not meet the conditions under a. or b., you run the risk of getting a wrong absolute encoder position at next Power ON or encoder activation after parking without prewarning if the traversing range extension is not working. Therefore, the traversing range extension remains active in the standard version.

Related to:

MD30240 $MA_ENC_TYPE
MD30300 $MA_IS_ROT_AX
MD30310 $MA_ROT_IS_MODULO
MD30250 $MA_ACT_POS_ABS
MD34220 $MA_ENC_ABS_TURNS_MODULO
MD34090 $MA_REFP_MOVE_DIST_CORR

30300	IS_ROT_AX			A01, A06, A11, -	G1,K3,R2,T1,G2, K2,R1,S1,V1
-	Rotary axis / spindle			BOOLEAN	PowerOn
SCAL, CTEQ					
-	-	FALSE,FALSE,FALSE,FALSE,FALSE,FALSE...	-	-	2/2

Description:

1: Axis: The axis is defined as a "rotary axis".

- The special functions of the rotary axis are active or can be activated by means of additional machine data according to the type of machine required (see below).
- The unit of measurement is degrees.
- The units of the axis-specific machine and setting data are interpreted as follows with the standard control setting:
  - Positions in "degrees"
  - Speedsin "rev/minute"
  - Accelerationin "rev/second²"
  - Jerk limitationin "rev/second³"

Spindle:
The machine data should always be set to "1" for a spindle, otherwise alarm 4210 "Rotary axis declaration missing" is output.
0: The axis is defined as a "linear axis".
Special cases:
- For an axis: Alarm 4200 if the axis is already defined as a geometry axis.
- For a spindle: Alarm 4210

Related to:
The following machine data are active only after activation of MD30300 $MA_IS_ROT_AX = "1":
- MD30310 $MA_ROT_IS_MODULO "Modulo conversion for rotary axis"
- MD30320 $MA_DISPLAY_IS_MODULO "Position display is modulo"
- MD10210 $MN_INT_INCR_PER_DEG "Calculation precision for angular positions"

30310	ROT_IS_MODULO			A01, A06, A11, -	TE3,K3,R2,T1,A3, R1,R2,S1
-	Modulo conversion for rotary axis / spindle			BOOLEAN	PowerOn
CTEQ					
-	-	FALSE,FALSE,FALSE,FALSE,FALSE,FALSE...	-	-	2/2

Description:
1: A modulo conversion is performed on the setpoints for the rotary axis. The software limit switches and the working area limitations are inactive; the traversing range is therefore unlimited in both directions. MD30300 $MA_IS_ROT_AX must be set to "1"
0: No modulo conversion
MD irrelevant for:
MD30300 $MA_IS_ROT_AX = "0" (linear axes)
Related to:
MD30320 $MA_DISPLAY_IS_MODULO "Position display is modulo 360°"
MD30300 $MA_IS_ROT_AX = 1 "Rotary axis"
MD36100 $MA_POS_LIMIT_MINUS "Software limit switch minus"
MD36110 $MA_POS_LIMIT_PLUS "Software limit switch plus"
SD43430 $SA_WORKAREA_LIMIT_MINUS "Working area limitation minus"
SD43420 $SA_WORKAREA_LIMIT_PLUS "Working area limitation plus"

30320	DISPLAY_IS_MODULO			A01, A06, A11	R2,T1,K2
-	Modulo 360 degrees displayed for rotary axis or spindle.			BOOLEAN	PowerOn
CTEQ					
-	-	FALSE,FALSE,FALSE,FALSE,FALSE,FALSE...	-	-	2/2

Description:
1: "Modulo 360 degrees" position display is active:
The position display of the rotary axis or spindle (for basic or machine coordinate system) is defined as "Modulo 360 degrees". In the case of a positive direction of rotation, the control resets the position display internally to 0.000 degrees following each cycle of 359.999 degrees. The display range is always positive and lies between 0 and 359.999 degrees.

0: Absolute position display is active:
In contrast to the modulo 360 degrees position display, absolute positions are indicated by the absolute position display, e.g. +360 degrees after 1 rotation, and +720 degrees after 2 rotations, etc in the positive direction. In this case, the display range is limited by the control in accordance with the linear axes.
MD irrelevant for:
Linear axes MD30300 $MA_IS_ROT_AX = "0"
Related to:
MD30300 $MA_IS_ROT_AX = 1 "Axis is rotary axis"

30330	MODULO_RANGE			EXP, A01, -	R2,T1,R1
degrees	Size of modulo range.			DOUBLE	Reset
CTEQ					
-	-	360.0	1.0	360000000.0	1/1

Description: Defines the size of the modulo range. Default positions are accepted and displayed within this range. Useful modulo ranges are n * 360 degrees with integer n. Other settings are equally possible in principle. Attention should be paid to having a useful relationship between the positions in the NC and the mechanics (ambiguity). Velocity definitions are not affected by settings in this MD.

30340	MODULO_RANGE_START			EXP, A01	R1,R2
degrees	Modulo range start position			DOUBLE	Reset
CTEQ					
-	-	0.0	-	-	1/1

Description: Defines the start position for the modulo range.
Example:
Start = 0 degree -> modulo range 0 <->360 degrees
Start = 180 degrees -> modulo range 180 <->540 degrees
Start = -180 degrees -> modulo range -180 <->180 degrees

30350	SIMU_AX_VDI_OUTPUT			A01, A06	A2,G2,Z1
-	Axis signals output for simulation axes			BOOLEAN	PowerOn
CTEQ					
-	-	FALSE	-	-	2/2

Description: This machine data defines whether axis-specific interface signals are output to the PLC during simulation of an axis.
1: The axis-specific interface signals of a simulated axis are output to the PLC.
In this way the user PLC program can be tested without the drives.
0: The axis-specific interface signals of a simulated axis are not output to the PLC.
All axis-specific interface signals are set to "0".
MD irrelevant for:
MD30130 $MA_CTRLOUT_TYPE (output type of setpoint value) = 1

30450	IS_CONCURRENT_POS_AX			EXP, A01	G1
-	Default for reset: neutral/channel axis			BOOLEAN	Reset
CTEQ					
802d-cu3	-	FALSE	-	-	1/1
802d-ng2	-	FALSE	-	-	1/1
802d-ng3	-	FALSE	-	-	1/1
802d-tm1	-	FALSE	-	-	0/0
802d-tm2	-	FALSE	-	-	1/1
802d-tm3	-	FALSE	-	-	1/1

Description: For SW4.3:
If FALSE: On RESET, a neutral axis is reassigned to the NC program.
If TRUE: On RESET, a neutral axis remains in the neutral axis state and an axis assigned to the NC program becomes a neutral axis

30465	AXIS_LANG_SUB_MASK			N01	K1
-	Substitution of NC language commands			DWORD	PowerOn
-					
-	-	0x0	0x0	0x3	2/2

Description: MD30465 $MA_AXIS_LANG_SUB_MASK defines for the leading spindle(s) of a coupling (synchronous spindle coupling, ELG, tangential tracking, coupled motion, master value coupling, master/slave) which language constructs/functions are to be substituted by the user program set by MD15700 $MN_LANG_SUB_NAME / MD15702 $MN_LANG_SUB_PATH (default: /_N_CMA_DIR/_N_LANG_SUB_SPF).
The substitution is executed only if a coupling is active for the relevant spindle and, in the case of a gear stage change, only if a gear stage change is actually pending.
Bit 0 = 1:
Automatic (M40) and direct (M41-M45) gear stage change
Bit 1 = 1:
Spindle positioning with SPOS/SPOSA/M19

30500	INDEX_AX_ASSIGN_POS_TAB			A01, A10	T1,H1
-	Axis is an indexing axis			BYTE	Reset
-					
802d-cu3	-	0	0	3	2/2
802d-ng2	-	0	0	3	2/2
802d-ng3	-	0	0	3	2/2
802d-tm1	-	0	0	3	-1/2
802d-tm2	-	0	0	3	2/2
802d-tm3	-	0	0	3	2/2

Description: The axis is declared as an indexing axis by assignment of indexing position table 1 or 2.
0: The axis is not declared as an indexing axis
1: The axis is an indexing axis. The associated indexing positions are stored in table 1 (MD10910 $MN_INDEX_AX_POS_TAB_1).
2: The axis is an indexing axis. The associated indexing positions are stored in table 2 (MD10930 $MN_INDEX_AX_POS_TAB_2).

3: Equidistant indexing with SW 4.3 and higher (840D) and SW 2.3 and higher (810D)
>3: Alarm 17090 "Value violates upper limit"
Special cases:
Several axes can be assigned to an indexing position table on the condition that all these indexing axes are of the same type (linear axis, rotary axis, modulo 360° function). If they are not, alarm 4000 is output during power-up.
Alarm 17500 "Axis is not an indexing axis"
Alarm 17090 "Value violates upper limit"
Related to:
MD10910 $MN_INDEX_AX_POS_TAB_1 (indexing position table 1)
MD10900 $MN_INDEX_AX_LENGTH_POS_TAB_1
(no. of indexing positions used in table 1)
MD10930 $MN_INDEX_AX_POS_TAB_2 (indexing position table 2)
MD10920 $MN_INDEX_AX_LENGTH_POS_TAB_2
(no. of indexing positions used in table 2)
For equidistant indexings with value 3:
MD30501 $MA_INDEX_AX_NUMERATOR Numerator
MD30502 $MA_INDEX_AX_DENOMINATOR Denominator
MD30503 $MA_INDEX_AX_OFFSET First indexing position
MD30505 $MA_HIRTH_IS_ACTIVE Hirth tooth system

30501	INDEX_AX_NUMERATOR			A01, A10	T1
mm, degrees	Indexing axis equidistant positions numerator			DOUBLE	Reset
-					
802d-cu3	-	0.0	-	-	1/1
802d-ng2	-	0.0	-	-	1/1
802d-ng3	-	0.0	-	-	1/1
802d-tm1	-	0.0	-	-	-1/2
802d-tm2	-	0.0	-	-	1/1
802d-tm3	-	0.0	-	-	1/1

Description: Defines the value of the numerator for calculating the distances between two indexing positions when the positions are equidistant. Modulo axes ignore this value and use MD30330 $MA_MODULO_RANGE instead.
MD irrelevant for non-equidistant indexes in accordance with tables.
Related to:
MD30502 $MA_INDEX_AX_DENOMINATOR,
MD30503 $MA_INDEX_AX_OFFSET;
MD30500 $MA_INDEX_AX_ASSIGN_POS_TAB

30502	INDEX_AX_DENOMINATOR			A01, A10	T1
-	Indexing axis equidistant positions denominator			DWORD	Reset
-					
802d-cu3	-	1	1	-	1/1
802d-ng2	-	1	1	-	1/1
802d-ng3	-	1	1	-	1/1
802d-tm1	-	1	1	-	-1/2
802d-tm2	-	1	1	-	1/1
802d-tm3	-	1	1	-	1/1

Description: Defines the value of the denominator for calculating the distances between two indexing positions when the positions are equidistant. For modulo axes it therefore specifies the number of indexing positions.
MD irrelevant for non-equidistant indexes in accordance with tables.
Related to:
MD30501 $MA_INDEX_AX_NUMERATOR,
MD30503 $MA_INDEX_AX_OFFSET,
MD30500 $MA_INDEX_AX_ASSIGN_POS_TAB

30503	INDEX_AX_OFFSET			A01, A10	T1,R2
mm, degrees	Indexing axis with equidistant positions first index position			DOUBLE	Reset
-					
802d-cu3	-	0.0	-	-	1/1
802d-ng2	-	0.0	-	-	1/1
802d-ng3	-	0.0	-	-	1/1
802d-tm1	-	0.0	-	-	-1/2
802d-tm2	-	0.0	-	-	1/1
802d-tm3	-	0.0	-	-	1/1

Description: Defines the position of the first indexing position from zero for an indexing axis with equidistant positions.
MD irrelevant for non-equidistant indexes in accordance with tables.
Related to:
MD30501 $MA_INDEX_AX_NUMERATOR, MD30502 $MA_INDEX_AX_DENOMINATOR, MD30500 $MA_INDEX_AX_ASSIGN_POS_TAB

30505	HIRTH_IS_ACTIVE			A01, A10	T1
-	Axis is an indexing axis with Hirth tooth system			BOOLEAN	Reset
CTEQ					
802d-cu3	-	FALSE	-	-	1/1
802d-ng2	-	FALSE	-	-	1/1
802d-ng3	-	FALSE	-	-	1/1
802d-tm1	-	FALSE	-	-	-1/2
802d-tm2	-	FALSE	-	-	1/1
802d-tm3	-	FALSE	-	-	1/1

Description: Hirth tooth system is active when value 1 is set.
MD irrelevant if axis is not an indexing axis.
Related to:
MD30500 $MA_INDEX_AX_ASSIGN_POS_TAB, MD30501 $MA_INDEX_AX_NUMERATOR, MD30502 $MA_INDEX_AX_DENOMINATOR, MD30503 $MA_INDEX_AX_OFFSET

30550	AXCONF_ASSIGN_MASTER_CHAN			A01, A06, A10	K5,TE3,B3,S3,K1,R1
-	Initial setting of channel for change of axis			BYTE	PowerOn
-					
-	-	0	0	10	0/0

Description: Definition of the channel to which the axis is assigned after Power ON.
Related to:
MD20070 $MC_AXCONF_MACHAX_USED

30552	AUTO_GET_TYPE			EXP, A06, A10	K5,M3,TE6,P2,P5,2.4
-	Automatic GET for get axis			BYTE	PowerOn
-					
-	-	1	0	2	0/0

Description: 0 = No automatically created GET -> Alarm in response to incorrect programming.
1 = GET is output when GET is generated automatically.
2 = GETD is output when GET is generated automatically.

30600	FIX_POINT_POS			A03, A10	K1,W3
mm, degrees	Fixed-value positions of axis with G75			DOUBLE	PowerOn
-					
-	4	0.0, 0.0, 0.0, 0.0	-	-	2/2

Description: The fixed-point positions (4 max.) for each axis which can be approached when G75 is programmed or via JOG are entered in these machine data.
References:
/PA/, "Programming Guide: Fundamentals"

30610	NUM_FIX_POINT_POS			A03, A10	K1
-	Number of fixed-value positions of an axis			DWORD	PowerOn
-					
-	-	0	0	4	2/2

Description: Number of fixed point positions set, i.e. the number of valid entries in MD30600 $MA_FIX_POINT_POS.
For G75, two (2) fixed point positions are assumed in MD30600 $MA_FIX_POINT_POS for reasons of compatibility, even if '0' has been entered in this machine data.

30800	WORKAREA_CHECK_TYPE			-	A3
-	Type of check of working area limitations.			BOOLEAN	NEW CONF
CTEQ					
-	-	FALSE	-	-	0/0

Description: With this machine data you can specify whether only the working area limitations of traversing axes are to be checked (0)
or
whether the stationary axes in a traversing block are also to be checked (1).
The value 0 corresponds to the behavior up to SW5.

2.4.2 Encoder matching

31000	ENC_IS_LINEAR			A02, A11, -	G2
-	Linear scale			BOOLEAN	PowerOn
-					
-	1	FALSE, FALSE	-	-	2/2

Description: MD = 1: Encoder for position actual-value acquisition is linear (linear scale).
MD = 0: Encoder for position actual-value acquisition is rotary.
The index [n] of the machine data has the following coding:
[encoder no.]: 0 or 1

31010	ENC_GRID_POINT_DIST			A02, A11, -	G2
mm	Division period for linear scales			DOUBLE	PowerOn
-					
-	1	0.01, 0.01	-	-	2/2

Description: For linear measuring system only:
The distance between the reference marks on the linear scale must be entered in this MD.
Index [n] of the machine data has the following coding:
[encoder no.]: 0 or 1

31020	ENC_RESOL			A02, A11, -	G2,R1
-	Encoder lines per revolution			DWORD	PowerOn
-					
-	1	2048, 2048	-	-	2/2

Description: For rotary measuring system only:
The number of encoder lines per encoder revolution must be entered in this MD.
Index [n] of the machine data has the following coding:
[encoder no.]: 0

31025	ENC_PULSE_MULT			EXP, A01, A02	-
-	Encoder multiplication (high-resolution)			DWORD	PowerOn
-					
-	1	2048, 2048	-	-	2/2

Description: For PROFIdrive only:
This MD describes the measuring system multiplication on PROFIBUS/PROFINET.
Default value 2048 means: changing by just one encoder line can be seen in bit11 of the actual PROFIdrive value XIST1, that is, the actual encoder value is multiplied by 2 to the power of 11= 2048.

31030	LEADSCREW_PITCH			A02, A11, -	G2,A3
mm	Pitch of leadscrew			DOUBLE	PowerOn
-					
-	-	10.0	-	-	2/2

Description: The ball screw lead must be entered in the MD (see data sheet: mm/rev or inch/rev).
Special meaning for hydraulic linear drives:
If a hydraulic linear drive (HLA) is configured as rotary axis, it must be specified in this MD, which drive feedrate in mm corresponds to a programmed revolution (360 degrees).

31040	ENC_IS_DIRECT			A02, A11, -	G2,S1
-	Direct measuring system (no compilation to load position)			BOOLEAN	PowerOn
-					
-	1	FALSE, FALSE	-	-	2/2

Description:

MD = 1:
Encoder for actual position value sensing is attached directly to the machine (without an intermediate gear unit).
MD = 0:
Encoder for actual position value sensing is attached to the motor (MD31060 $MA_DRIVE_AX_RATIO_NUMERA and MD31050 $MA_DRIVE_AX_RATIO_DENOM are included in the encoder valuation).
The index[n] of the machine data has the following coding:
[encoder no.]: 0 or 1
Special cases:
An incorrect entry may result in an incorrect encoder resolution, as, for example, the gear ratios would be calculated incorrectly.

31044	ENC_IS_DIRECT2			A02, -	G2,S1
-	Encoder mounted on the additional gearbox			BOOLEAN	NEW CONF
-					
-	1	FALSE, FALSE	-	-	2/2

Description:

When using a load intermediate gearbox (for example for rotating tools, compare MD31066 $MA_DRIVE_AX_RATIO2_NUMERA and MD31064 $MA_DRIVE_AX_RATIO2_DENOM), the encoder installation location can be defined as "on the output" of this load intermediate gearbox:
Encoder installation "on the output of the load intermediate gearbox" is configured by MD31040 $MA_ENC_IS_DIRECT=1 and MD31044 $MA_ENC_IS_DIRECT2=1 at the same time.
Encoder installation "on the input of the load intermediate gearbox" is configured by MD31040 $MA_ENC_IS_DIRECT=1 together with MD31044 $MA_ENC_IS_DIRECT2=0.
A parameterization alarm will be output if MD31044 $MA_ENC_IS_DIRECT2=1 is set without MD31040 $MA_ENC_IS_DIRECT=1 (this combination has not been defined).

31050	DRIVE_AX_RATIO_DENOM			A02, A11, -	A2,A3,G2,S1,V1
-	Denominator load gearbox			DWORD	PowerOn
-					
-	6	1, 1, 1, 1, 1, 1	1	2147000000	2/2

Description:

The load gearbox denominator is entered in this MD.
The index [n] of the machine data has the following coding:
[control parameter set no.]: 0-5

31060	DRIVE_AX_RATIO_NUMERA			A02, A11, -	A2,A3,G2,S1,V1
-	Numerator load gearbox			DWORD	PowerOn
-					
-	6	1, 1, 1, 1, 1, 1	-2147000000	2147000000	2/2

Description:

The load gearbox numerator is entered in this MD.
The index [n] of the machine data has the following coding:
[control parameter set no.]: 0-5

31064	DRIVE_AX_RATIO2_DENOM			A02, -	G2,S1
-	Denominator additional gearbox			DWORD	NEW CONF
-					
-	-	1	1	2147000000	2/2

Description: Intermediate gearbox denominator
This MD together with MD31066 $MA_DRIVE_AX_RATIO2_NUMERA defines an intermediate gearbox that acts as a multiplier to the motor/load gearbox (described by MD31060 $MA_DRIVE_AX_RATIO_NUMERA and MD31050 $MA_DRIVE_AX_RATIO_DENOM).
The load intermediate gearbox is inactive with the default values 1:1.
Please consider MD31044 $MA_ENC_IS_DIRECT2 for encoder installation.
When the Safety Integrated functionality (see MD36901 $MA_SAFE_FUNCTION_ENABLE) is active, the intermediate gearbox can be used, if

- the effectively active gear ratio from the motor to the tool is considered in the safety-relevant machine data and if
- the safety-relevant supplementary conditions for gear ratios are considered.

For more detailed information see the Safety Integrated Description of Functions.

31066	DRIVE_AX_RATIO2_NUMERA			A02, -	G2,S1
-	Numerator additional gearbox			DWORD	NEW CONF
-					
-	-	1	-2147000000	2147000000	2/2

Description: Intermediate gearbox numerator
Related to:
MD31064 $MA_DRIVE_AX_RATIO2_DENOM

31070	DRIVE_ENC_RATIO_DENOM			A02, A11, -	A3,G2,S1
-	Denominator measuring gearbox			DWORD	PowerOn
-					
-	1	1, 1	1	2147000000	2/2

Description: The measuring gearbox denominator is entered in this MD.
The index [n] of the machine data has the following coding:
[encoder no.]: 0

31080	DRIVE_ENC_RATIO_NUMERA			A02, A11, -	A3,G2,S1
-	Numerator measuring gearbox			DWORD	PowerOn
-					
-	1	1, 1	1	2147000000	2/2

Description: The measuring gearbox numerator is entered in this MD.
The index [n] of the machine data has the following coding:
[encoder no.]: 0

31090	JOG_INCR_WEIGHT			A01, A12	H1,G2
mm, degrees	Evaluation of an increment with INC/handwheel			DOUBLE	Reset
CTEQ					
-	2	0.001, 0.00254	-	-	2/2

Description: The value entered in this MD defines the path of an increment which applies when an axis is traversed with the JOG keys in incremental mode or with the handwheel.
The path traveled by the axis on each increment each time the traversing key is pressed or for each handwheel detent position is defined by the following parameters:

- MD31090 $MA_JOG_INCR_WEIGHT
  (Weighting of an increment of a machine axis for INC/handwheel)
- Selected increment size (INC1, ..., INCvar)

The possible increment stages are defined globally for all axes in MD11330 $MN_JOG_INCR_SIZE_TAB [n] and in SD41010 $SN_JOG_VAR_INCR_SIZE.
Entering a negative value reverses the direction of evaluation of the traverse keys and the handwheel rotation.
Related to:
MD11330 $MN_JOG_INCR_SIZE_TAB
SD41010 $SN_JOG_VAR_INCR_SIZE

31122	BERO_DELAY_TIME_PLUS			A02, A06	S1,R1
s	BERO delay time Plus			DOUBLE	NEW CONF
-					
-	1	0.000110, 0.000110	-	-	2/2

Description: This machine data in combination with the setting in MD34200 $MA_ENC_REFP_MODE (referencing mode) = 7 causes a signal runtime compensation in the positive direction of movement at a position determined by a BERO (zero mark).
The typical total delay time of the BERO message path for overtravel in the positive direction of movement is entered.
This time includes:

- the BERO edge delay time
- the time for digitizing the signal
- the time for processing the measured value, etc.

The periods of time depend on the hardware used. The default value is typical for SIEMENS products. Adjustment by the customer is only required in exceptional cases.
Input of the minimum value "0.0" deactivates the compensation (only active in combination with MD34200 $MA_ENC_REFP_MODE = 7).
The machine data is available for all encoders.
Related to:
MD34200 $MA_ENC_REFP_MODE (referencing mode)
MD34040 $MA_REFP_VELO_SEARCH_MARKER[n]
(reference point creep velocity [Enc. no.])

31123	BERO_DELAY_TIME_MINUS			A02, A06	S1,R1
s	BERO delay time minus			DOUBLE	NEW CONF
-					
-	1	0.000078, 0.000078	-	-	2/2

Description: This machine data in combination with the setting in MD34200 $MA_ENC_REFP_MODE (referencing mode) = 7 causes a signal runtime compensation in the negative direction of movement at a position determined by a BERO (zero mark).

The typical total delay time of the BERO message path for overtravel in the negative direction of movement is entered.

The time includes:

- the BERO edge delay time
- the time for digitizing the signal
- the time for processing the measured value, etc.

The periods of time depend on the hardware used. The default value is typical for SIEMENS products. Adjustment by the customer is only required in exceptional cases.

Input of the minimum value "0.0" deactivates the compensation (only active in combination with MD34200 $MA_ENC_REFP_MODE = 7).

The machine data is available for all encoders.

Related to:

MD34200 $MA_ENC_REFP_MODE (referencing mode)

MD34040 $MA_REFP_VELO_SEARCH_MARKER[n]
(creep velocity [Enc. no.])

31200	SCALING_FACTOR_G70_G71			EXP, A01	G2
-	Factor for converting values while G70/G71 is active			DOUBLE	PowerOn
CTEQ					
-	-	25.4	1.e-9	-	0/0

Description: The inch/metric conversion factor by which the programmed geometry of an axis (position, polynomial coefficients, radius for circular programming,...) is multiplied when the programmed value for G code group G70/G71 differs from the initial setting value (set in MD20150 $MC_GCODE_RESET_VALUES[n]) is entered in this MD.

The factor can be set for each axis individually, so that pure positioning axes are not dependent on G70/G71. The factors within the three geometry axes should not be different.

The data influenced by G70/G71 are described in the Programming Guide.

Related to:

MD20150 $MC_GCODE_RESET_VALUES[n] (G group initial setting).

2.4.3 Closed-loop control

32000	MAX_AX_VELO			A11, A04	M3,TE1,TE3,W6, Z3,H1,K3,M1,P2, A3,B2,G2,H2,S1, V1,W1
mm/min, rev/min	maximum axis velocity			DOUBLE	NEW CONF
CTEQ					
-	-	10000.,10000.,10000., 10000.,10000....	1.e-9	-	7/2

Description: Maximum velocity at which the axis can permanently travel. The value limits both the positive and the negative axis velocity. The axis traverses at this velocity, if rapid traverse has been programmed.
Depending on the MD30300 $MA_IS_ROT_AX, the maximum rotary or linear axis velocity has to be entered.
In the machine data, the dynamic behavior of the machine and drive and the limit frequency of the actual value acquisition must be taken into account.

32010	JOG_VELO_RAPID			A11, A04, -	H1
mm/min, rev/min	Rapid traverse in jog mode			DOUBLE	Reset
CTEQ					
-	-	10000.,10000.,10000., 10000.,10000....	-	-	7/2

Description: The axis velocity entered applies when the rapid traverse override key is pressed in JOG mode and when the axial feedrate override is set to 100%.
The value entered must not exceed the maximum permissible axis velocity (MD32000 $MA_MAX_AX_VELO).
This machine data is not used for the programmed rapid traverse G0.
MD irrelevant to:
Operating modes AUTOMATIC and MDI
Related to:
MD32000 $MA_MAX_AX_VELO (maximum axis velocity)
MD32040 $MA_JOG_REV_VELO_RAPID
(revolutional feedrate for JOG with rapid traverse override)
NC/PLC interface signal V3200 1000.5,1004.5,1008.5 (Rapid traverse override)
NC/PLC interface signal V3200 0004 (Feedrate override A-H)

32020	JOG_VELO			A11, A04, -	H1
mm/min, rev/min	Jog axis velocity			DOUBLE	Reset
CTEQ					
-	-	2000.,2000.,2000.,200 0.,2000.,2000....	-	-	7/2

Description: The velocity entered applies to traversing in JOG mode when the axial feedrate override switch position is 100%.
This velocity is only used when general SD41110 $SN_JOG_SET_VELO = 0 for linear axes, and linear feedrate is selected (SD41100 $SN_JOG_REV_IS_ACTIVE = 0) or SD41130 $SN_JOG_ROT_AX_SET_VELO = 0 for rotary axes.

If this is the case, the axis velocity is active for
- continuous jogging
- incremental jogging (INC1, ... INCvar)
- handwheel jogging

The value entered must not exceed the maximum permissible axis velocity (MD32000 $MA_MAX_AX_VELO).
If DRF is active, the axis velocity for JOG must be reduced with MD32090 $MA_HANDWH_VELO_OVERLAY_FACTOR.
Spindles in JOG mode:
This machine data can also be used to define the JOG mode speed for specific spindles (if SD41200 $SN_JOG_SPIND_SET_VELO = 0). However, the speed can be modified with the spindle override switch.
Related to:
MD32000 $MA_MAX_AX_VELO
(maximum axis velocity)
MD32050 $MA_JOG_REV_VELO
(revolutional feedrate for JOG)
MD32090 $MA_HANDWH_VELO_OVERLAY_FACTOR
(ratio of JOG velocity to handwheel velocity (DRF))
SD41110 $SN_JOG_SET_VELO
(JOG velocity for G94)
SD41130 $SN_JOG_ROT_AX_SET_VELO
(JOG velocity for rotary axes)
NC/PLC interface signal V3200 0004 (Feedrate override A-H)

32040	JOG_REV_VELO_RAPID			A11, A04	H1,P2,R2,T1,V1,Z 1
mm/rev	Revolutional feedrate in JOG with rapid traverse override			DOUBLE	Reset
CTEQ					
-	-	2.5,2.5,2.5,2.5,2.5,2.5, 2.5,2.5,2.5...	-	-	1/1

Description: The value entered defines the revolutional feedrate of the axis in JOG mode with rapid traverse override in relation to the revolutions of the master spindle. This feedrate is active when SD41100 $SN_JOG_REV_IS_ACTIVE = 1. (Revolutional feedrate active with JOG)
MD irrelevant for:
SD41100 $SN_JOG_REV_IS_ACTIVE = "0"
Related to:
SD41100 $SN_JOG_REV_IS_ACTIVE (revolutional feedrate with JOG active)
MD32050 $MA_JOG_REV_VELO (revolutional feedrate with JOG)

32050	JOG_REV_VELO			A11, A04	H1,P2,R2,T1,V1,Z 1
mm/rev	Revolutional feedrate in JOG			DOUBLE	Reset
CTEQ					
-	-	0.5,0.5,0.5,0.5,0.5,0.5, 0.5,0.5,0.5...	-	-	1/1

Description: The value entered defines the revolutional feedrate of the axis in JOG mode in relation to the revolutions of the master spindle.
This feedrate is active when SD41100 $SN_JOG_REV_IS_ACTIVE= 1 (revolutional feedrate active with JOG).

MD irrelevant for:
Linear feedrate; i.e. SD41100 $SN_JOG_REV_IS_ACTIVE = 0
Related to:
SD41100 $SN_JOG_REV_IS_ACTIVE
(revolutional feedrate for JOG active)
MD32040 $MA_JOG_REV_VELO_RAPID
(JOG revolutional feedrate with rapid traverse override)

32060	POS_AX_VELO			A12, A04	H1,P2,K1,V1,2.4, 6.2
mm/min, rev/min	Initial setting for positioning axis velocity			DOUBLE	Reset
CTEQ					
-	-	10000.,10000.,10000., 10000.,10000....	-	-	1/1

Description: If a positioning axis is programmed in the part program without specifying the axis-specific feedrate, the feedrate entered in MD32060 $MA_POS_AX_VELO is automatically used for this axis. The feedrate in MD32060 $MA_POS_AX_VELO applies until an axis-specific feedrate is programmed in the part program for this positioning axis.
MD irrelevant for:
MD32060 $MA_POS_AX_VELO is irrelevant for all axis types other than positioning axis.
Special cases:
If a ZERO velocity is entered in MD32060 $MA_POS_AX_VELO, the positioning axis does not traverse if it is programmed without feed. If a velocity is entered in MD32060 $MA_POS_AX_VELO that is higher than the maximum velocity of the axis (MD32000 $MA_MAX_AX_VELO), the velocity is automatically restricted to the maximum rate.

32070	CORR_VELO			A04	2.4,6.2
%	Axis velocity for override			DOUBLE	Reset
CTEQ					
802d-cu3	-	50.0	-	-	2/2
802d-ng2	-	50.0	-	-	1/1
802d-ng3	-	50.0	-	-	1/1
802d-tm1	-	50.0	-	-	0/0
802d-tm2	-	50.0	-	-	0/0
802d-tm3	-	50.0	-	-	0/0

Description: Limitation of axis velocity for handwheel override, external zero offset, continuous dressing, distance control $AA_OFF via synchronized actions related to the JOG velocity
MD32020 $MA_JOG_VELO,
MD32010 $MA_JOG_VELO_RAPID,
MD32050 $MA_JOG_REV_VELO,
MD32040 $MA_JOG_REV_VELO_RAPID.
The maximum permissible velocity is the maximum velocity in MD32000 $MA_MAX_AX_VELO. Velocity is limited to this value.
The conversion into linear or rotary axis velocity is made according to MD30300 $MA_IS_ROT_AX.

32074	FRAME_OR_CORRPOS_NOTALLOWED			A01	K5,K2,2.4,6.2
-	Frame or tool length compensation are not permissible			DWORD	PowerOn
CTEQ					
802d-cu3	-	0	0	0xFFF	1/1
802d-ng2	-	0	0	0xFFF	1/1
802d-ng3	-	0	0	0xFFF	1/1
802d-tm1	-	0	0	0xFFF	0/0
802d-tm2	-	0	0	0xFFF	1/1
802d-tm3	-	0	0	0xFFF	1/1

Description:

This machine data is used to define the effectiveness of the frames and tool length compensations for indexing axes, PLC axes and command axes started from synchronized actions.

Bit assignment:

Bit 0 = 0:
Programmable zero offset (TRANS) allowed for indexing axis

Bit 0 = 1:
Programmable zero offset (TRANS) forbidden for indexing axis

Bit 1 = 0:
Scale modification (SCALE) allowed for indexing axis

Bit 1 = 1:
Scale modification (SCALE) forbidden for indexing axis

Bit 2 = 0:
Direction change (MIRROR) allowed for indexing axis

Bit 2 = 1:
Direction change (MIRROR) forbidden for indexing axis

Bit 3 = 0:
DRF offset allowed for axis

Bit 3 = 1:
DRF offset forbidden for axis

Bit 4 = 0:
External zero offset allowed for axis

Bit 4 = 1:
External zero offset forbidden for axis

Bit 5 = 0:
Online tool compensation allowed for axis

Bit 5 = 1:
Online tool compensation forbidden for axis

Bit 6 = 0:
Synchronized action offset allowed for axis

Bit 6 = 1:
Synchronized action offset forbidden for axis

Bit 7 = 0:
Compile cycles offset allowed for axis

Bit 7 = 1:
Compile cycles offset forbidden for axis

Bit 8 = 0:
Axial frames and tool length compensation are NOT considered for PLC axes (bit evaluation so for compatibility reasons)

Bit 8 = 1:
Axial frames are considered for PLC axes, and the tool length compensation is considered for PLC axes which are geometry axes.
Bit 9 = 0:
Axial frames are considered for command axes, and the tool length compensation is considered for command axes which are geometry axes.
Bit 9 = 1:
Axial frames and tool length compensation are NOT considered for command axes
Bit 10 = 0:
In JOG mode, too, traversing of a geometry axis as a PLC or command axis is NOT allowed with active rotation.
Bit 10 = 1:
In JOG mode, traversing of a geometry axis as a PLC axis or command axis (static synchronized action) is allowed with active rotation (ROT frame). Traversing must be terminated prior to returning to AUTOMATIC mode (neutral axis state), as otherwise alarm16908 would be output when the mode is changed.
Bit 11 = 0:
In the 'Program interrupted' status, repositioning to the interrupt position (AUTO - JOG) takes place when changing from JOG to AUTO.
Bit 11 = 1:
Prerequisite: Bit 10 == 1 (PLC or command axis motion with active rotation in JOG mode).
In the 'Program interrupted' status, the end point of the PLC or command axis motion is taken over when changing from JOG to AUTOMATIC and the geometry axes are positioned according to the rotation

32080	HANDWH_MAX_INCR_SIZE			A05, A10	H1
mm, degrees	Limitation of selected increment			DOUBLE	Reset
CTEQ					
-	-	0.0	-	-	1/1

Description: > 0: Limitation of size of selected increment $MN_JOG_INCR_SIZE <Increment/VDI signal>Ü or SD41010 $SN_JOG_VAR_INCR_SIZE for the associated machine axis
0: No limitation

32082	HANDWH_MAX_INCR_VELO_SIZE			A05, A10, A04	-
mm/min, rev/min	Limitation for velocity override			DOUBLE	Reset
CTEQ					
802d-cu3	-	500.0,500.0,500.0,500.0,500.0,500.0...	-	-	2/2
802d-ng2	-	500.0,500.0,500.0,500.0,500.0,500.0...	-	-	1/1
802d-ng3	-	500.0,500.0,500.0,500.0,500.0,500.0...	-	-	1/1
802d-tm1	-	500.0,500.0,500.0,500.0,500.0,500.0...	-	-	1/1
802d-tm2	-	500.0,500.0,500.0,500.0,500.0,500.0...	-	-	1/1
802d-tm3	-	500.0,500.0,500.0,500.0,500.0,500.0...	-	-	1/1

Description: For the velocity override of positioning axes:
>0: Limitation of size of selected increment $MN_JOG_INCR_SIZEL<Increment/ VDI signal> 0 or SD41010 $SN_JOG_VAR_INCR_SIZE for the associated machine axis
0: No limitation

32084	HANDWH_STOP_COND			EXP, A10	H1
-	Handwheel travel behavior			DWORD	Reset
CTEQ					
802d-cu3	-	0xFF	0	0x7FF	2/2
802d-ng2	-	0xFF	0	0x7FF	1/1
802d-ng3	-	0xFF	0	0x7FF	1/1
802d-tm1	-	0xFF	0	0x7FF	1/1
802d-tm2	-	0xFF	0	0x7FF	1/1
802d-tm3	-	0xFF	0	0x7FF	1/1

Description: Definition of the response of the handwheel travel to axis-specific VDI interface signals or a context-sensitive interpolator stop:
Bit = 0:
Interruption or collection of the distances preset via the handwheel.
Bit = 1:
Cancellation of the traversing motion or no collection.
Bit assignment:
Bit 0: feedrate override
Bit 1: spindle speed override
Bit 2: feedrate stop/spindle stop or context-sensitive interpolator stop
Bit 3: clamping procedure running (= 0 no effect)
Bit 4: servo enable
Bit 5: pulse enable
For machine axis:
Bit 6 = 0
For handwheel travel, the maximum velocity at which the relevant machine axis can be traversed is the feedrate set in MD32020 $MA_JOG_VELO.
Bit 6 = 1
For handwheel travel, the maximum velocity at which the relevant machine axis can be traversed is the feedrate set in MD32000 $MA_MAX_AX_VELO.

Bit 7 = 0
The override is active in handwheel travel.
Bit 7 = 1
The override is always assumed to be 100% for handwheel travel, regardless of how the override switch is set.
Exception: override 0% is always active.
Bit 8 = 0
The override is active with DRF
Bit 8 = 1
The override is always assumed to be 100% for DRF, regardless of how the override switch is set.
Exception: override 0% is always active.
Bit 9 = 0
For handwheel travel, the maximum possible velocity with revolutional feedrate is
- with the feedrate in SD41120 $SN_JOG_REV_SET_VELO or
- the feedrate in MD32050 $MA_JOG_REV_VELO or
- in the case of rapid traverse with MD32040 $MA_JOG_REV_VELO_RAPID

of the relevant machine axis calculated with the spindle or rotary axis feedrate.
Bit 9 = 1
For handwheel travel, the maximum possible velocity is with the revolutional feedrate in MD32000 $MA_MAX_AX_VELO of the relevant machine axis. (see also bit 6)
Bit 10 = 0
For overlaid motions, $AA_OVR is not active.
Bit 10 = 1
For overlaid motions (DRF, $AA_OFF, external work offset, online tool offset), the override $AA_OVR settable via synchronized actions is active.
Bit 11 = 0
With the VDI interface signal "driveReady" (= 0) missing, paths defined by the handwheel are not collected, but a traversing request is displayed. Start of a continuous JOG motion in continuous mode ($SN_JOG_CONT_MODE_LEVELTRIGGRD 41050 = 0) or an incremental JOG motion in continuous mode ($MN_JOG_INC_MODE_LEVELTRIGGRD 11300 = 0) is displayed as a traversing request. With "driveReady" = 1, however, the tool is not traversed, but the procedure is aborted and must be started again.
Bit 11 = 1
With the VDI interface "driveReady" missing, the paths defined by the handwheel are collected. Start of a continuous JOG motion in continuous mode ($SN_JOG_CONT_MODE_LEVELTRIGGRD 41050 = 0) or an incremental JOG motion in continuous mode ($MN_JOG_INC_MODE_LEVELTRIGGRD 11300 = 0) is displayed and saved as a traversing request. With "driveReady" = 1 the traversing motion is started.

32090	HANDWH_VELO_OVERLAY_FACTOR			A10, A04	H1
-	Ratio of JOG velocity to handwheel velocity (DRF)			DOUBLE	Reset
CTEQ					
802d-cu3	-	0.5	-	-	2/2
802d-ng2	-	0.5	-	-	1/1
802d-ng3	-	0.5	-	-	1/1
802d-tm1	-	0.5	-	-	1/1
802d-tm2	-	0.5	-	-	1/1
802d-tm3	-	0.5	-	-	1/1

Description: The velocity active with the handwheel in DRF can be reduced from the JOG velocity with this machine data.
The following applies to linear axes for the velocity active with DRF:
vDRF = SD41110 $SN_JOG_SET_VELO * MD32090 $MA_HANDWH_VELO_OVERLAY_FACTOR
or when SD41110 $SN_JOG_SET_VELO = 0:
vDRF = MD32020 $MA_JOG_VELO * MD32090 $MA_HANDWH_VELO_OVERLAY_FACTOR
The velocity setting in SD41130 $SN_JOG_ROT_AX_SET_VELO applies for DRF on rotary axes instead of the value in SD41110 $SN_JOG_SET_VELO.
MD irrelevant for:
JOG handwheel
Related to:
MD32020 $MA_JOG_VELO (JOG axis velocity)
SD41110 $SN_JOG_SET_VELO (JOG velocity for G94)
SD41130 $SN_JOG_ROT_AX_SET_VELO (JOG velocity for rotary axes)

32100	AX_MOTION_DIR			A07, A03, A11, -	G1,TE3,G2
-	Traversing direction (not control direction)			DWORD	PowerOn
-					
-	-	1	-1	1	2/2

Description: The direction of movement of the machine can be reversed with this MD.
The control direction is, however, not destroyed, i.e. closed-loop control remains stable.
-1: direction reversed
0, 1: direction not reversed

32110	ENC_FEEDBACK_POL			A07, A02, A11	G2
-	Sign actual value (control direction)			DWORD	PowerOn
-					
-	1	1, 1	-1	1	2/2

Description: The evalution direction of the shaft encoder signals is entered into the MD.
-1: actual value is reversed
0, 1: actual value is not reversed
The index[n] of the machine data has the following coding:
[Encoder no.]: 0 or 1
Special cases:
When an incorrect control direction is entered, the axis can run off.
Depending on the setting of the corresponding limit values, one of the following alarms is displayed:
Alarm 25040 "Standstill monitoring"

Alarm 25050 "Contour monitoring"
Alarm 25060 "Speed setpoint limitation"
If an uncontrolled setpoint leap occurs on connection of a drive, the control direction might be incorrect.

32200	POSCTRL_GAIN			A07, A11	G1,TE1,TE9,K3,S3,A2,A3,D1,G2,S1,V1
1000/min	Servo gain factor			DOUBLE	NEW CONF
CTEQ					
-	6	16.66666667, 16.66666667, 16.66666667, 16.66666667, 16.66666667...	0	2000.	7/2

Description:

Position controller gain, or servo gain factor.
The input/output unit for the user is [(m/min)/mm].
I.e. MD32200 $MA_POSCTRL_GAIN[n] = 1 corresponds to a 1 mm following error at V = 1m/min.
The following machine data have default settings for adapting the standard selected input/output unit to the internal unit [rev/s].

- MD10230 $MN_SCALING_FACTORS_USER_DEF[9] = 16.666667S
- MD10220 $MN_SCALING_USER_DEF_MASK = 0x200; (bit no 9 as hex value).

If the value "0" is entered the position controller is opened.
When entering the servo gain factor it is important to take into account that the gain factor of the whole position control loop is still dependent on other parameters of the controlled system. A distinction should be made between a "desired servo gain factor" (MD32200 $MA_POSCTRL_GAIN) and an "actual servo gain factor" (produced by the machine). Only when all the parameters of the control loop are matched will these servo gain factors be the same.
Other factors are:

- Speed setpoint adjustment (MD32260 $MA_RATED_VELO, MD32250 $MA_RATED_OUTVAL)

  or automatic speed setpoint interface adjustment (with MD32250 $MA_RATED_OUTVAL = 0 etc.)
- Correct actual value recording of the position encoder (no. of encoder marks, high resolution, encoder mounting location, gear etc.)
- Correct actual speed recording on the drive (standardization, possibly tacho compensation, tacho generator)

Note:
Axes which interpolate together and are to perform a machining operation, must either have the same gain setting (i.e. have the identical following error = 45° slope at the same velocity) or they must be matched via MD32910 $MA_DYN_MATCH_TIME.
The actual servo gain factor can be checked by means of the following error (in the service display). However, note that the drift compensation must be checked first.
In the case of analog axes, a drift compensation must be performed prior to the control.
The index [n] of the machine data has the following coding:
[control parameter set no.]: 0-5

32210	POSCTRL_INTEGR_TIME			A07	G2
s	Position controller integral time			DOUBLE	NEW CONF
-					
-	-	1.0	0	10000.0	2/2

Description: Position controller integral action time for the integral component in s
The MD is only active if MD32220 $MA_POSCTRL_INTEGR_ENABLE = TRUE.
A value of the MD less than 0.001 disables the integral component of the PI controller. The controller is then a P controller, which works with disabled manipulated variable clamping (see also MD32230 $MA_POSCTRL_CONFIG, bit0 = 1).

32220	POSCTRL_INTEGR_ENABLE			A07	G2
-	Enable integral component position controller			BOOLEAN	PowerOn
-					
-	-	FALSE	-	-	2/2

Description: Enable of the integral component position controller; the position controller is then a PI controller in which the manipulated variable clamping is disabled (s.a. MD32230 $MA_POSCTRL_CONFIG, bit0 = 1).
Position overshoots may occur if the integral component is used. For this reason, this functionality may only be used in special cases.

32230	POSCTRL_CONFIG			A07	TE1
-	Configuration of the position controller structure			BYTE	PowerOn
-					
-	-	0	0	17	7/2

Description: Configuration of the position controller structure:
Bit0 = 1: Manipulated variable clamping inactive
Bit4 = 1: Accelerated exact stop signal active

32250	RATED_OUTVAL			A01, A11	A3,D1,G2
%	Rated output voltage			DOUBLE	NEW CONF
CTEQ					
-	1	0.0	0.0	200	1/1

Description: a.)
Scaling of the manipulated variable with analog drives:
The value of the speed setpoint in percent is to be entered in this MD, in relation to the maximum speed setpoint at which the motor speed specified in MD32260 $MA_RATED_VELO[n] is reached.
Related to:
MD32250 $MA_RATED_OUTVAL[n] only makes sense in combination with MD32260 $MA_RATED_VELO[n].
Example:
1. At a voltage of 5V, the drive reaches a speed of
1875 rev/min ==> RATED_OUTVAL = 50%, RATED_VELO = 11250 [degrees/s]
2. At a voltage of 8V, the drive reaches a speed of
3000 rev/min ==> RATED_OUTVAL = 80%, RATED_VELO = 18000 [degrees/s]
3. At a voltage of 1.5V, the drive reaches a speed of
562.5 rev/min ==> RATED_OUTVAL = 15%, RATED_VELO = 3375 [degrees/s]

All three examples are possible for one and the same drive/converter. The ratio of the two values is decisive; it is the same in all three examples.
MD32250 $MA_RATED_OUTVAL and MD32260 $MA_RATED_VELO describe physical characteristics of converter and drive; they can therefore only be determined by means of measurement or start-up instructions (converter, drive).
b.)
Scaling of the manipulated variable with digital PROFIdrive drives:
Default value "0" declares MD32250 $MA_RATED_OUTVAL and MD32260 $MA_RATED_VELO as invalid. Scaling of the manipulated variable is automatically determined and adjusted from the drive parameters instead.
Otherwise (MD32250 $MA_RATED_OUTVAL unequal to zero), the scaling of the manipulated variable is not determined from the drive (for example non-Siemens PROFIdrive drives), but set with RATED_VELO and RATED_OUTVAL, even in the case of these, irrespective of the scaling active on the drive side. In this case, the following applies:
Scaling of the manipulated variable on the drive = RATED_VELO / RATED_OUTVAL
In the case of simultaneous operation of analog and PROFIdrive drives, the settings for the analog axes must be adjusted as described in a.).

32260	RATED_VELO			A01, A11	A3,D1,G2
rev/min	Rated motor speed			DOUBLE	NEW CONF
CTEQ					
-	1	3000.0	-	-	1/1

Description:

Only applies when:

MD32250 $MA_RATED_OUTVAL is set greater than 0.

The drive speed (scaled on the drive) that is reached with the percentual speed setpoint specified in MD32250 $MA_RATED_OUTVAL[n] must be entered in the MD.

Related to:

MD32260 $MA_RATED_VELO[n] only makes sense in combination with MD32250 $MA_RATED_OUTVAL[n].

32300	MAX_AX_ACCEL			A11, A04, -	M3,TE6,Z3,H1,K3 ,M1,A3,B1,B2,K1, V1,2.4
m/s², rev/s²	maximum axis acceleration			DOUBLE	NEW CONF
CTEQ					
-	5	1.0, 1.0, 1.0, 1.0, 1.0,1.0, 1.0, 1.0, 1.0, 1.0...	1.0e-3	-	7/2

Description:

Maximum acceleration, i.e. change in setpoint velocity, which is to act upon the axis. The value limits both the positive and negative axis acceleration.
Depending on machine data MD30300 $MA_IS_ROT_AX, the maximum angular or linear axis acceleration must be entered.
If axes are interpolated linearly in a grouping, the grouping is limited in such a way that no axis is overloaded. With regard to contour accuracy, the control dynamic behavior has to be taken into account.
MD irrelevant for error states that lead to rapid stop.
Related to:

MD32210 $MA_MAX_ACCEL_OVL_FACTOR
MD32434 $MA_G00_ACCEL_FACTOR
MD32433 $MA_SOFT_ACCEL_FACTOR
MD20610 $MC_ADD_MOVE_ACCEL_RESERVE
MD20602 $MC_CURV_EFFECT_ON_PATH_ACCEL

32301	JOG_MAX_ACCEL			A11, A04, -	-
m/s², rev/s²	Maximum acceleration in JOG mode			DOUBLE	NEW CONF
CTEQ					
-	-	0.0	-	-	0/0

Description: MD32301 $MA_JOG_MAX_ACCEL is effective only in JOG mode.
It ensures that the acceleration set in the MD is not exceeded when the axis/spindle is in JOG mode.
MD32301 $MA_JOG_MAX_ACCEL = 0 disables the limit. The actual acceleration value of the axis/spindle is then effective.
Related to:
MD32300 $MA_MAX_AX_ACCEL (axis acceleration)
MD35200 $MA_GEAR_STEP_SPEEDCTRL_ACCEL (acceleration of spindle in speed control mode)
MD35210 $MA_GEAR_STEP_POSCTRL_ACCEL (acceleration of spindle in position control mode)
MD35212 $MA_GEAR_STEP_POSCTRL_ACCEL2 (acceleration of spindle in position control mode, tapping)

32310	MAX_ACCEL_OVL_FACTOR			A04	B1
-	Overload factor for axial velocity steps			DOUBLE	NEW CONF
CTEQ					
-	5	1.26, 1.26, 1.26, 1.26, 1.26	-	-	1/1

Description: The overload factor limits the velocity jump of the machine axis on block transition. The value entered is related to the value of MD32300 $MA_MAX_AX_ACCEL (axis acceleration) and states by how much the maximum acceleration can be exceeded for one IPO cycle.
Related to:
MD32300 $MA_MAX_AX_ACCEL (axis acceleration)
MD10070 $MN_IPO_SYSCLOCK_TIME_RATIO (interpolator clock)
There is an entry for each dynamic G code group.

32320	DYN_LIMIT_RESET_MASK			A05, A06, A10, A04	-
-	Reset behavior of dynamic response limitation.			DWORD	Reset
CTEQ					
-	-	0	0	0x01	2/2

Description: With MD32320 $MA_DYN_LIMIT_RESET_MASK, the reset behavior of functions limiting the dynamic response can be set.
The MD is bit-coded; currently only bit 0 (LSB) is assigned.
Bit 0 == 0:
Channel reset/M30 resets the programmed ACC to 100%. (compatibility: same response as before)
Bit 0 == 1:
Programmed ACC is maintained beyond channel reset/M30.

32400	AX_JERK_ENABLE			A07, A04, -	B2
-	Axial jerk limitation			BOOLEAN	NEW CONF
CTEQ					
-	-	FALSE	-	-	1/1

Description: Enables the function of an axial jerk limitation.
The limitation is set via a time constant; it is always active.
The limitation works independently of the limitations "path-related maximum jerk", "knee-shaped acceleration characteristic" and the axial jerk limitation of the axes that are operated in JOG mode or positioning axis mode.
Related to:
MD32410 $MA_AX_JERK_TIME (time constant for axial jerk limitation)

32402	AX_JERK_MODE			A07, A04	B2,G2,B3
-	Filter type for axial jerk limitation			BYTE	PowerOn
CTEQ					
-	-	1	1	3	1/1

Description: Filter type for axial jerk limitation:
1: 2nd order filter (as in SW 1 through 4)
2: Moving averaging (SW 5 and higher)
3: Bandstop filter (SW 6 and higher)
Type 2 requires more computing time, but causes smaller contour errors for the same smoothing effect, or smoother movements at the same accuracy.
Type 2 is recommended; type 1 is set as a default value for reasons of compatibility.
The maximum jerk is set in the time constant MD32410 $MA_AX_JERK_TIME.
Recommended values for type 1:
Min. 0.03 s; max. 0.06s.
Recommended values for type 2:
Min. 1 position-control cycle; max. 16 position-control cycles
At a position-control cycle of 2ms, this corresponds to 0.002 to 0.032 seconds.
Type 3 requires the setting of MD32410 $MA_AX_JERK_TIME, MD32412 $MA_AX_JERK_FREQ and MD32414 $MA_AX_JERK_DAMP.
To parameterize a simple bandstop filter, we recommend setting MD32410 $MA_AX_JERK_TIME=0, which automatically sets "denominator frequency = numerator frequency = blocking frequency = MD32412 $MA_AX_JERK_FREQ".
However, MD32410 $MA_AX_JERK_TIME>0 is used to set a specific denominator frequency, which makes it possible to implement a bandstop filter with amplitude increase for frequencies beyond the blocking frequency.
MD32402 $MA_AX_JERK_MODE is only active if MD32400 $MA_AX_JERK_ENABLE has been set to 1.
Special cases, errors:
The machine data must be same for all axes of an axis container.
Related to:
MD32400 $MA_AX_JERK_ENABLE
MD32410 $MA_AX_JERK_TIME
and for type 3: MD32412 $MA_AX_JERK_FREQ and MD32414 $MA_AX_JERK_DAMP

32410	AX_JERK_TIME			A07, A04	G1,TE1,S3,B2,G2
s	Time constant for axial jerk filter			DOUBLE	NEW CONF
-					
-	-	0.001	-	-	1/1

Description: Time constant of the axial jerk filter which causes a smoother axis setpoint characteristic. The jerk filter will only be active, if the time constant is higher than a position control cycle.
Not active in case of errors that cause a change in follow-up mode (for example EMERGENCY STOP99:
Special cases:
Machine axes that are supposed to be interpolating with one another, must have the same effective jerk filtering (for example the same time constant for tapping without compensating chuck).
Related to:
MD32400 $MA_AX_JERK_ENABLE (axial jerk limitation)

32412	AX_JERK_FREQ			A07, A04	-
-	Blocking frequency of axial jerk filter			DOUBLE	NEW CONF
-					
-	-	10.0	-	-	1/1

Description: Blocking frequency of axial jerk filter bandstop MD is only active if MD32402 $MA_AX_JERK_MODE = 3

32414	AX_JERK_DAMP			A07, A04	-
-	Damping of axial jerk filter			DOUBLE	NEW CONF
-					
-	-	0.0	-	-	1/1

Description: Damping of axial jerk filter bandstop:
Input value 0 means complete blocking with MD32412 $MA_AX_JERK_FREQ, input values >0 can attenuate the blocking effect.
MD is only active if MD32402 $MA_AX_JERK_MODE = 3

32420	JOG_AND_POS_JERK_ENABLE			A04	G1,H1,P2,S3,B2
-	Default setting of axis jerk limitation			BOOLEAN	Reset
CTEQ					
-	-	FALSE	-	-	2/2

Description: Enables the function of the axis-specific jerk limitation for the operating modes JOG, REF and positioning axis mode.
1: Axial jerk limitation for JOG mode and positioning axis mode
0: No jerk limitation for JOG mode and positioning axis mode
The maximum jerk occurring is defined in MD32430 $MA_JOG_AND_POS_MAX_JERK.
Related to:
MD32430 $MA_JOG_AND_POS_MAX_JERK (axial jerk)

32430	JOG_AND_POS_MAX_JERK			A04	G1,P2,S3,B2
m/s³, rev/s³	Axial jerk			DOUBLE	NEW CONF
CTEQ					
-	-	1000.0,1000.0,1000.0, 1000.0,1000.0...	1.e-9	-	2/2

Description: The jerk limit value limits the rate of change of axis acceleration in JOG, REF and positioning axis modes.
The setting and time calculation are made as for MD20600 $MC_MAX_PATH_JERK (path-related maximum jerk).
MD irrelevant for:
- Path interpolation
- Error states that lead to rapid stop.

Related to:
MD32420 $MA_JOG_AND_POS_JERK_ENABLE (initial setting of axial jerk limitation)

32431	MAX_AX_JERK			A04	B1,B2
m/s³, rev/s³	maximum axial jerk for path movement			DOUBLE	NEW CONF
-					
-	5	1.e6, 1.e6, 1.e6, 1.e6, 1.e6...	1.e-9	-	3/3

Description: Maximum axial jerk for path motion
There is an entry for each G code except for the 59th G code group (dynamic G code group).

32432	PATH_TRANS_JERK_LIM			A04	B1,B2
m/s³, rev/s³	maximum axial jerk at block transition in continuous-path mode			DOUBLE	NEW CONF
CTEQ					
-	5	1.e6, 1.e6, 1.e6, 1.e6, 1.e6...	-	-	3/3

Description: The control limits the jerk (acceleration jump) at a block transition between contour sections of different curvature to the value set.
MD irrelevant for:
Exact stop
Related to:
Continuous-path mode, SOFT type of acceleration

32433	SOFT_ACCEL_FACTOR			A04, -	TE9,B1,B2
-	Scaling of acceleration limitation with SOFT			DOUBLE	NEW CONF
-					
-	5	1., 1., 1., 1., 1.	1e-9	-	1/1

Description: Scaling of the acceleration limitation with SOFT.
Relevant axial acceleration limitation for SOFT =:
(MD32433 $MA_SOFT_ACCEL_FACTOR[..] * MD32300 $MA_MAX_AX_ACCEL[..])
There is an entry for each dynamic G code group.

32434	G00_ACCEL_FACTOR			A04, -	TE9,B1,B2
-	Scaling of acceleration limitation with G00.			DOUBLE	NEW CONF
-					
-	-	1.	1e-9	-	1/1

Description: Scaling of the acceleration limitation with G00.
Relevant axial acceleration limitation for G00 =:
(MD32433 $MA_G00_ACCEL_FACTOR[..] * MD32300 $MA_MAX_AX_ACCEL[..])

32435	G00_JERK_FACTOR			A04	B1,B2
-	Scaling of jerk limitation with G00.			DOUBLE	NEW CONF
-					
-	-	1.	1e-9	-	1/1

Description: Scaling of the jerk limitation with G00.
Relevant axial jerk limitation for G00 =:
(MD32435 $MA_G00_JERK_FACTOR[..] * MD32431 $MA_MAX_AX_JERK[..])

32436	JOG_MAX_JERK			A04	-
m/s³, rev/s³	Maximum axial jerk during JOG motion			DOUBLE	NEW CONF
CTEQ					
-	-	0.0	-	-	0/0

Description: The jerk limit value limits the change of axis acceleration in JOG mode only .
The behavior of the MD is analog to:
MD32430 $MA_JOG_AND_POS_MAX_JERK
It therefore also communicates with:
MD32420 $MA_JOG_AND_POS_JERK_ENABLE
(default of the axial jerk limitation)

32440	LOOKAH_FREQUENCY			EXP, A04	B1
-	Smoothing frequency for Look Ahead			DOUBLE	NEW CONF
-					
-	-	10.	-	-	2/2

Description: Acceleration procedures in continuous-path mode with Look Ahead which execute with a higher frequency than that parameterized in this MD are smoothed as a function of the parameterization in MD20460 $MC_LOOKAH_SMOOTH_FACTOR.
It is always the minimum of all the axes participating in the path which is determined.
If vibrations are aroused in the mechanics of this axis and if their frequency is known, then this MD should be set to a lower value than this frequency.

32450	BACKLASH			A09	K3,G2
mm, degrees	Backlash			DOUBLE	NEW CONF
-					
-	1	0.0, 0.0	-	-	2/2

Description: Backlash on reversal between positive and negative travel directions.
Input of the compensation value is
- positive, if the encoder is leading the machine part (normal situation)
- negative, if the encoder is behind the machine part.

Backlash compensation is not active when 0 is entered.
Backlash compensation is always active after reference point approach in all operating modes.
Special cases:
A specific backlash on reversal must be entered for each measuring system.
Related to:
MD30200 $MA_NUM_ENCS (number of measuring systems)
MD36500 $MA_ENC_CHANGE_TOL
(Maximum tolerance at actual position value change)

32452	BACKLASH_FACTOR			A09	K3,G2,S1,V1
-	Evaluation factor for backlash			DOUBLE	NEW CONF
-					
-	6	1.0, 1.0, 1.0, 1.0, 1.0, 1.0	0.01	100.0	1/1

Description: Evaluation factor for backlash.
The machine data enables the backlash defined in MD32450 $MA_BACKLASH to be changed as a function of the parameter set, in order to take a gear stage dependent backlash into account, for example.
Related to:
MD32450 $MA_BACKLASH[n]

32490	FRICT_COMP_MODE			A09	K3
-	Type of friction compensation			BYTE	PowerOn
-					
-	1	1	0	2	2/2

Description: 0: No friction compensation
1: Friction compensation with constant injection value or adaptive characteristic
2: Friction compensation with learned characteristic via neural network

32500	FRICT_COMP_ENABLE			A09	K3,G2
-	Friction compensation active			BOOLEAN	NEW CONF
-					
-	-	FALSE	-	-	2/2

Description:

1: Friction compensation is enabled for this axis.

Depending on the setting of MD32490 $MA_FRICT_COMP_MODE, either "friction compensation with constant modulation factor" or "QEC with neural networks" becomes active.

In the case of neural QEC, the machine data should not be set to "1" until a valid characteristic has been "learnt".

During the learning stage, the compensation values are added on independently of the contents of this machine data.

0: Friction compensation is not enabled for this axis.

Thus, no friction compensation values are entered.

Related to:

MD32490 $MA_FRICT_COMP_MODE

Friction compensation type

MD32510 $MA_FRICT_COMP_ADAPT_ENABLE

Friction compensation adaptation active

MD32520 $MA_FRICT_COMP_CONST_MAX

Maximum friction compensation value

MD32540 $MA_FRICT_COMP_TIME

Friction compensation time constant

MD38010 $MA_MM_QEC_MAX_POINTS

Number of interpolation points for QEC with neural networks

32510	FRICT_COMP_ADAPT_ENABLE			EXP, A09	K3
-	Adaptation friction compensation active			BOOLEAN	NEW CONF
-					
-	1	FALSE	-	-	2/2

Description:

1: Friction compensation with amplitude adaptation is enabled for the axis. Quadrant errors on circular contours can be compensated with friction compensation.

The amplitude of the friction compensation value required to be added on is frequently not constant over the entire acceleration range. That is, a lower compensation value needs to be entered for optimum friction compensation for higher accelerations than for lower accelerations.

The parameters of the adaptation curve have to be determined, and entered in the machine data.

0: Friction compensation with amplitude adaptation is not enabled for the axis.

MD irrelevant for:

MD32500 $MA_FRICT_COMP_ENABLE = 0

MD32490 $MA_FRICT_COMP_MODE = 2

Related to:
MD32500 $MA_FRICT_COMP_ENABLE
Friction compensation active
MD32520 $MA_FRICT_COMP_CONST_MAX
Maximum friction compensation value
MD32530 $MA_FRICT_COMP_CONST_MIN
Minimum friction compensation value
MD32550 $MA_FRICT_COMP_ACCEL1
Adaptation acceleration value 1
MD32560 $MA_FRICT_COMP_ACCEL2
Adaptation acceleration value 2
MD32570 $MA_FRICT_COMP_ACCEL3
Adaptation acceleration value 3
MD32540 $MA_FRICT_COMP_TIME
Friction compensation time constant

32520	FRICT_COMP_CONST_MAX			EXP, A09	K3
mm/min, rev/min	Maximum friction compensation value			DOUBLE	NEW CONF
-					
-	1	0.0	-	-	2/2

Description: If adaptation is inactive (MD32510=0), the maximum friction compensation is added throughout the entire acceleration range.
If adaptation is active (MD32510=1), the maximum friction compensation is entered in accordance with the adaptation curve.
In the 1st acceleration range (a < MD32550), the add-on amplitude = MD32520 * (a/MD32550)
In the 2nd acceleration range (MD32550 <= a <= MD32560), the add-on amplitude = MD32520
In the 3rd acceleration range (MD32560 < a < MD32570), the add-on amplitude = MD32520 * (1-(a-MD32560)/(MD32570-MD32560))
In the 4th acceleration range (MD32570 <= a), the add-on amplitude = MD32530
MD irrelevant for:
MD32500 $MA_FRICT_COMP_ENABLE = 0
MD32490 $MA_FRICT_COMP_MODE = 2 (neural QEC)
Related to:
MD32500 $MA_FRICT_COMP_ENABLE
Friction compensation active
MD32510 $MA_FRICT_COMP_ADAPT_ENABLE
Friction compensation adaptation active
MD32530 $MA_FRICT_COMP_CONST_MIN
Minimum friction compensation value
MD32550 $MA_FRICT_COMP_ACCEL1
Adaptation acceleration value 1
MD32560 $MA_FRICT_COMP_ACCEL2
Adaptation acceleration value 2
MD32570 $MA_FRICT_COMP_ACCEL3
Adaptation acceleration value 3
MD32540 $MA_FRICT_COMP_TIME
Friction compensation time constant

32530	FRICT_COMP_CONST_MIN			EXP, A09	K3
mm/min, rev/min	Minimum friction compensation value			DOUBLE	NEW CONF
-					
-	1	0.0	-	-	2/2

Description: The minimum friction compensation value is active only if "Friction compensation with adaptation" (MD32510 $MA_FRICT_COMP_ADAPT_ENABLE=1) is active.
The amplitude of the friction compensation value is entered in the 4th acceleration range (MD32570 $MA_FRICT_COMP_ACCEL3 <= a).
MD irrelevant for:
MD32510 $MA_FRICT_COMP_ADAPT_ENABLE = 0
MD32490 $MA_FRICT_COMP_MODE = 2 (neural QEC)
Special cases:
In special cases, the value for FRICT_COMP_CONST_MIN may be even higher than for MD32520 $MA_FRICT_COMP_CONST_MAX.
Related to:
MD32500 $MA_FRICT_COMP_ENABLE
Friction compensation active
MD32510 $MA_FRICT_COMP_ADAPT_ENABLE
Friction compensation adaptation active
MD32520 $MA_FRICT_COMP_CONST_MAX
Maximum friction compensation value
MD32550 $MA_FRICT_COMP_ACCEL1
Adaptation acceleration value 1
MD32560 $MA_FRICT_COMP_ACCEL2
Adaptation acceleration value 2
MD32570 $MA_FRICT_COMP_ACCEL3
Adaptation acceleration value 3
MD32540 $MA_FRICT_COMP_TIME
Friction compensation time constant

32540	FRICT_COMP_TIME			EXP, A09	K3
s	Friction compensation time constant			DOUBLE	NEW CONF
-					
-	1	0.015	-	-	2/2

Description: The friction compensation value is entered via a DT1 filter.
The add-on amplitude decays in accordance with the time constant.
MD irrelevant for:
MD32500 $MA_FRICT_COMP_ENABLE = 0
Related to:
MD32500 $MA_FRICT_COMP_ENABLE
Friction compensation active
MD32520 $MA_FRICT_COMP_CONST_MAX
Maximum friction compensation value

32550	FRICT_COMP_ACCEL1			EXP, A09	K3
m/s², rev/s²	Adaptation acceleration value 1			DOUBLE	NEW CONF
-					
802d-cu3	1	0.0	-	-	1/1
802d-ng2	1	0.0	-	-	0/0
802d-ng3	1	0.0	-	-	1/1
802d-tm1	1	0.0	-	-	0/0
802d-tm2	1	0.0	-	-	0/0
802d-tm3	1	0.0	-	-	1/1

Description: The adaptation acceleration value is only required if "Friction compensation with adaptation" (MD32510=1) is active.
The adaptation acceleration values 1 to 3 are interpolation points for defining the adaptation curve. The adaptation curve is subdivided into 4 ranges, in each of which a different friction compensation value applies.
For the 1st range (a < MD32550), the add-on amplitude = a * MD32520/ MD32550
MD irrelevant for:
MD32510 $MA_FRICT_COMP_ADAPT_ENABLE = 0
MD32490 $MA_FRICT_COMP_MODE = 2
Related to:
MD32500 $MA_FRICT_COMP_ENABLE
Friction compensation active
MD32510 $MA_FRICT_COMP_ADAPT_ENABLE
Friction compensation adaptation active
MD32520 $MA_FRICT_COMP_CONST_MAX
Maximum friction compensation value
MD32530 $MA_FRICT_COMP_CONST_MIN
Minimum friction compensation value
MD32560 $MA_FRICT_COMP_ACCEL2
Adaptation acceleration value 2
MD32570 $MA_FRICT_COMP_ACCEL3
Adaptation acceleration value 3
MD32540 $MA_FRICT_COMP_TIME
Friction compensation time constant

32560	FRICT_COMP_ACCEL2			EXP, A09	K3
m/s², rev/s²	Adaptation acceleration value 2			DOUBLE	NEW CONF
-					
802d-cu3	1	0.0	-	-	1/1
802d-ng2	1	0.0	-	-	0/0
802d-ng3	1	0.0	-	-	1/1
802d-tm1	1	0.0	-	-	0/0
802d-tm2	1	0.0	-	-	0/0
802d-tm3	1	0.0	-	-	1/1

Description:

The adaptation acceleration value is only required if "Friction compensation with adaptation" (MD32510=1) is active.
The adaptation acceleration values 1 to 3 are interpolation points for defining the adaptation curve. The adaptation curve is subdivided into 4 ranges, in each of which a different friction compensation value applies.
In the 1st acceleration range (a < MD32550), the add-on amplitude = MD32520 * (a/MD32550)
In the 2nd acceleration range (MD32550 <= a <= MD32560), the add-on amplitude = MD32520
In the 3rd acceleration range (MD32560 < a < MD32570), the add-on amplitude = MD32520 * (1-(a-MD32560)/(MD32570-MD32560))
In the 4th acceleration range (MD32570 <= a), the add-on amplitude = MD32530
MD irrelevant for:
MD32510 $MA_FRICT_COMP_ADAPT_ENABLE = 0
MD32490 $MA_FRICT_COMP_MODE = 2
Related to:
MD32500 $MA_FRICT_COMP_ENABLE
Friction compensation active
MD32510 $MA_FRICT_COMP_ADAPT_ENABLE
Friction compensation adaptation active
MD32520 $MA_FRICT_COMP_CONST_MAX
Maximum friction compensation value
MD32530 $MA_FRICT_COMP_CONST_MIN
Minimum friction compensation value
MD32550 $MA_FRICT_COMP_ACCEL1
Adaptation acceleration value 1
MD32570 $MA_FRICT_COMP_ACCEL3
Adaptation acceleration value 3
MD32540 $MA_FRICT_COMP_TIME
Friction compensation time constant

32570	FRICT_COMP_ACCEL3			EXP, A09	K3
m/s², rev/s²	Adaptation acceleration value 3			DOUBLE	NEW CONF
-					
802d-cu3	1	0.0	-	-	1/1
802d-ng2	1	0.0	-	-	0/0
802d-ng3	1	0.0	-	-	1/1
802d-tm1	1	0.0	-	-	0/0
802d-tm2	1	0.0	-	-	0/0
802d-tm3	1	0.0	-	-	1/1

Description: The adaptation acceleration value is only required if "Friction compensation with adaptation" (MD32510=1) is active.
The adaptation acceleration values 1 to 3 are interpolation points for defining the adaptation curve. The adaptation curve is subdivided into 4 ranges, in each of which a different friction compensation value applies.
In the 1st acceleration range (a < MD32550), the add-on amplitude = MD32520 * (a/MD32550)
In the 2nd acceleration range (MD32550 <= a <= MD32560), the add-on amplitude = MD32520
In the 3rd acceleration range (MD32560 < a < MD32570), the add-on amplitude = MD32520 * (1-(a-MD32560)/(MD32570-MD32560))
In the 4th acceleration range (MD32570 <= a), the add-on amplitude = MD32530
MD irrelevant for:
MD32510 $MA_FRICT_COMP_ADAPT_ENABLE = 0
MD32490 $MA_FRICT_COMP_MODE = 2
Related to:
MD32500 $MA_FRICT_COMP_ENABLE
Friction compensation active
MD32510 $MA_FRICT_COMP_ADAPT_ENABLE
Friction compensation adaptation active
MD32520 $MA_FRICT_COMP_CONST_MAX
Maximum friction compensation value
MD32530 $MA_FRICT_COMP_CONST_MIN
Minimum friction compensation value
MD32550 $MA_FRICT_COMP_ACCEL1
Adaptation acceleration value 1
MD32560 $MA_FRICT_COMP_ACCEL2
Adaptation acceleration value 2
MD32540 $MA_FRICT_COMP_TIME
Friction compensation time constant

32580	FRICT_COMP_INC_FACTOR			A09	K3
%	Weighting factor of friction comp. value w/ short trav. movem.			DOUBLE	NEW CONF
-					
802d-cu3	1	0.0	0	100.0	1/1
802d-ng2	1	0.0	0	100.0	0/0
802d-ng3	1	0.0	0	100.0	1/1
802d-tm1	1	0.0	0	100.0	0/0
802d-tm2	1	0.0	0	100.0	0/0
802d-tm3	1	0.0	0	100.0	1/1

Description: The optimum friction compensation value determined by the circularity test can cause overcompensation of this axis if compensation is activated and axial positioning movements are short.
In such cases, a better setting can be achieved by reducing the amplitude of the friction compensation value and acts on all positioning blocks that are made within an interpolation cycle of the control.
The factor that has to be entered can be determined empirically and can be different from axis to axis because of the different friction conditions. The input range is between 0 and 100% of the value determined by the circularity test.
The default setting is 0; so that no compensation is performed for short traversing movements.
Related to:
MD32500 $MA_FRICT_COMP_ENABLE Friction compensation active

32610	VELO_FFW_WEIGHT			A07, A09	G1,TE1,K3,S3,A3, G2,S1,V1
-	Feedforward control factor f. velocity/speed feedforward control			DOUBLE	NEW CONF
-					
802d-cu3	6	1.0, 1.0, 1.0, 1.0, 1.0, 1.0	-	-	2/2
802d-ng2	6	1.0, 1.0, 1.0, 1.0, 1.0, 1.0	-	-	0/0
802d-ng3	6	1.0, 1.0, 1.0, 1.0, 1.0, 1.0	-	-	2/2
802d-tm1	6	1.0, 1.0, 1.0, 1.0, 1.0, 1.0	-	-	0/0
802d-tm2	6	1.0, 1.0, 1.0, 1.0, 1.0, 1.0	-	-	0/0
802d-tm3	6	1.0, 1.0, 1.0, 1.0, 1.0, 1.0	-	-	2/2

Description: Weighting factor for feedforward control. Is normally = 1.0 on digital drives, since these keep the setpoint speed exactly .
On analog drives, this factor can be used to compensate the gain error of the drive actuator, so that the actual speed becomes exactly equal to the setpoint speed (this reduces the following error with feedforward control).
On both drive types, the effect of the feedforward control can be continuously reduced with a factor of < 1.0, if the machine moves too abruptly and other measures (e.g. jerk limitation) are not to be used. This also reduces possibly existing overshoots; however, the error increases on curved contours, e.g. on a circle. With 0.0, you have a pure position controller without feedforward control.

Contour monitoring takes into account factors < 1.0.
In individual cases, it can, however, become necessary to increase MD CONTOUR_TOL.

32620	FFW_MODE			A07, A09	G1,K3,S3,G2,S1
-	Feedforward control mode			BYTE	Reset
-					
-	-	3	0	4	1/1

Description: FFW_MODE defines the feedforward control mode to be applied on an axis-specific basis:
0 = No feedforward control
1 = Speed feedforward control with PT1 balancing
2 = Torque feedforward control (only for SIMODRIVE611D) with PT1 balancing
3 = Speed feedforward control with Tt balancing
4 = Torque feedforward control (only for SIMODRIVE611D) with Tt balancing
The high-level language instructions FFWON and FFWOF are used to activate and deactivate the feedforward control for specific channels on all axes.
To prevent the feedforward control from being affected by these instructions on individual axes, you can define that it is always activated or always deactivated in machine data FFW_ACTIVATION_MODE (see also FFW_ACTIVATION_MODE).
The torque feedforward control must be activated via the global option data $ON_FFW_MODE_MASK.
If a feedforward control mode is selected (speed or torque feedforward control), whether or not the feedforward control can be activated or deactivated by the part program can also be set in MD32630 $MA_FFW_ACTIVATION_MODE.
Torque feedforward control is an option that has to be enabled.
Related to:
MD32630 $MA_FFW_ACTIVATION_MODE
MD32610 $MA_VELO_FFW_WEIGHT
MD32650 $MA_AX_INERTIA

32630	FFW_ACTIVATION_MODE			A07, A09	K3,G2
-	Activate feedforward control from program			BYTE	Reset
CTEQ					
802d-cu3	-	1	0	2	2/2
802d-ng2	-	1	0	2	0/0
802d-ng3	-	1	0	2	2/2
802d-tm1	-	1	0	2	0/0
802d-tm2	-	1	0	2	0/0
802d-tm3	-	1	0	2	2/2

Description: MD32630 $FFW_ACTIVATION_MODE can be used to define whether the feedforward control for this axis/spindle can be switched on and off by the part program.
0 = The feedforward control cannot be switched on or off by the high-level language elements FFWON and FFWOF respectively.
For the axis/spindle, the state specified by MD32620 $MA_FFW_MODE is therefore always effective.
1 = The feedforward control can be switched on and off by the part program with FFWON and FFWOF respectively.
The instruction FFWON/FFWOF becomes active immediately

2 = The feedforward control can be switched on and off by the part program with FFWON and FFWOF respectively.

The instruction FFWON/FFWOF does not become active until the next axis standstill

The default setting is specified by the channel-specific MD20150 $MC_GCODE_RESET_VALUES. This setting is valid even before the first NC block is executed.

Notes:

The last valid state continues to be active even after Reset (and therefore also with JOG).

As the feedforward control of all axes of the channel is switched on and off by FFWON and FFWOF respectively, MD32630 $MA_FFW_ACTIVATION_MODE should be set identically for axes interpolating with one naother.

Switching feedforward control on or off while the axis/spindle is traversing may cause compensation operations in the control loop. Interpolating axes are therefore stopped by the part program if such switching operations occur (internal stop Stop G09 is triggered).

Related to:

MD32620 $MA_FFW_MODE

MD20150 $MC_GCODE_RESET_VALUES

32640	STIFFNESS_CONTROL_ENABLE			A01, A07	TE3,G2
-	Dynamic stiffness control			BOOLEAN	NEW CONF
CTEQ					
-	1	FALSE	-	-	2/2

Description:

Dynamic stiffness control is active when the bit is set.

Higher servo gain factors are possible if stiffness control is active (MD32200 $MA_POSCTRL_GAIN).

Precondition: The drive supports the DSC function (see SIMODRIVE611D and PROFIdrive).

Note on PROFIdrive drives:

Alarm 26017 refers to this machine data, if

a. The PROFIdrive telegramm used (see $MN_DRIVE_TELEGRAM_TYPE) does not support the DSC function. Remedy: Use a sufficiently powerful telegram (e.g. tel. 106, 116).

b. Specifically for SINAMICS drives, if inversion of the encoder signal is parameterized in $MA_ENC_FEEDBACK_POL=-1 for active DSC. Remedy: Remove inversion of the encoder signal from $MA_ENC_FEEDBACK_POL, and enter it in SINAMICS parameter p410 instead.

32642	STIFFNESS_CONTROL_CONFIG			A01, A07	-
-	Dynamic stiffness control configuration (DSC)			BYTE	NEW CONF
CTEQ					
-	1	0	0	1	2/2

Description:

Configuration of dynamic stiffness control (DSC):

0: DSC in drive works with indirect measuring system, i.e. motor measuring system (standard case)

1: DSC in drive works with direct measuring system

Notes:

Availability of this function depends on the drive used (the drive must support function DSC).

With SIMODRIVE611D (without independent parameterization on the drive) or SINAMICS (P1193 unequal to 0) the value of this machine data must be set to 0.

32644	STIFFNESS_DELAY_TIME			A01, A07	-
s	dynamic stiffness control: Delay			DOUBLE	PowerOn
CTEQ					
-	1	-0.0015	-0.02	0.02	2/2

Description: Configuration of compensation dead time of the dynamic stiffness control (DSC) with optimized PROFIBUS/PROFINET cycle, unit: seconds

32700	ENC_COMP_ENABLE			A09	K3
-	Encoder/spindle error compensation.			BOOLEAN	NEW CONF
-					
-	1	FALSE, FALSE	-	-	2/2

Description: 1: LEC (leadscrew error compensation) is activated for the measuring system.
This enables leadscrew and measuring system errors to be compensated.
The function is not enabled internally until the relevant measuring system has been referenced (NC/PLC interface signal V390x 0000.4 / .5 (Referenced/synchronized 1 or 2) = 1).
write protect function (compensation values) active.
0: LEC is not active for the axis/measuring system.
Related to:
MD38000 $MA_MM_ENC_COMP_MAX_POINTS number of interpolation points with LEC
NC/PLC interface signal V390x 0000.4 (Referenced/synchronized 1)
NC/PLC interface signal V390x 0000.5 (Referenced/synchronized 2)

32710	CEC_ENABLE			A09	K3
-	Enable of sag compensation			BOOLEAN	NEW CONF
-					
802d-cu3	-	FALSE	-	-	1/1
802d-ng2	-	FALSE	-	-	1/1
802d-ng3	-	FALSE	-	-	1/1
802d-tm1	-	FALSE	-	-	-1/2
802d-tm2	-	FALSE	-	-	1/1
802d-tm3	-	FALSE	-	-	1/1

Description: 1: Sag compensation is enabled for this axis.
Inter-axis machine geometry errors (e.g. sag and angularity errors) can be compensated with sag compensation.
The function is not activated until the following conditions have been fulfilled:

- The "Interpolatory compensation" option is set
- The associated compensation tables have been loaded into the NC user memory and enabled (SD41300 $SN_CEC_TABLE_ENABLE[t] = 1)
- The relevant position measuring system is referenced (NC/PLC interface signal V390x 0000.4 / .5 = 1 (Referenced/synchronized 1 or 2))

0: Sag compensation is not enabled for the compensation axis.
Related to:
MD18342 $MN_MM_CEC_MAX_POINTS[t]
Number of interpolation points for sag compensation
SD41300 $SN_CEC_TABLE_ENABLE[t]
Enable evaluation of sag compensation table t
NC/PLC interface signal V390x 0000.4 / .5
(referenced/synchronized 1 or 2)

32711	CEC_SCALING_SYSTEM_METRIC			A09	K3,G2
-	Measuring system of sag compensation			BOOLEAN	NEW CONF
-					
802d-cu3	-	TRUE	-	-	1/1
802d-ng2	-	TRUE	-	-	1/1
802d-ng3	-	TRUE	-	-	1/1
802d-tm1	-	TRUE	-	-	-1/2
802d-tm2	-	TRUE	-	-	1/1
802d-tm3	-	TRUE	-	-	1/1

Description: Compensation data exist in:
0: inch system
1: metric system

32720	CEC_MAX_SUM			A09	K3
mm, degrees	Maximum compensation value for sag compensation			DOUBLE	NEW CONF
-					
802d-cu3	-	1.0	0	1.0	1/1
802d-ng2	-	1.0	0	1.0	1/1
802d-ng3	-	1.0	0	1.0	1/1
802d-tm1	-	1.0	0	1.0	-1/2
802d-tm2	-	1.0	0	1.0	1/1
802d-tm3	-	1.0	0	1.0	1/1

Description: In sag compensation, the absolute value of the total compensation value (sum of compensation values of all active compensation relations) is monitored axially with machine data value CEC_MAX_SUM.
If the determined total compensation value is larger than the maximum value, alarm 20124 is triggered. Program processing is not interrupted. The compensation value output as the additional setpoint is limited to the maximum value.
MD irrelevant to:
- MSEC
- Backlash compensation
- Temperature compensation

Related to:
MD32710 $MA_CEC_ENABLE
Enable sag compensation
SD41300 $SN_CEC_TABLE_ENABLE[t]
Enable evaluation of sag compensation table t
NC/PLC interface signal V390x 0000.4 / .5
(referenced/synchronized 1 or 2)

32730	CEC_MAX_VELO			EXP, A09, A04	K3
%	Change in velocity at CEC			DOUBLE	NEW CONF
-					
802d-cu3	-	10.0	0	100.0	1/1
802d-ng2	-	10.0	0	100.0	1/1
802d-ng3	-	10.0	0	100.0	1/1
802d-tm1	-	10.0	0	100.0	-1/2
802d-tm2	-	10.0	0	100.0	1/1
802d-tm3	-	10.0	0	100.0	1/1

Description: In sag compensation, modification of the total compensation value (sum of the compensation values of all active compensation relations) is limited axially. The maximum change value is defined in this machine data as a percentage of MD32000 $MA_MAX_AX_VELO (maximum axis velocity).
If the change in the total compensation value is greater than the maximum value, alarm 20125 is output. Program processing is however continued. The path not covered because of the limitation is made up as soon as the compensation value is no longer subject to limitation.
MD irrelevant to:
- MSEC
- Backlash compensation
- Temperature compensation

Related to:
MD32710 $MA_CEC_ENABLE
Enable sag compensation
MD32000 $MA_MAX_AX_VELO
Maximum axis velocity
SD41300 $SN_CEC_TABLE_ENABLE[t]
Enable evaluation of sag compensation table t
NC/PLC interface signal V390x 0000.4 / .5
(referenced/synchronized 1 or 2)

32750	TEMP_COMP_TYPE			A09	K3,W1
-	Temperature compensation type			BYTE	PowerOn
CTEQ					
-	-	0	0	7	0/0

Description: The type of temperature compensation applicable to the machine axis is activated in MD32750 $MA_TEMP_COMP_TYPE.
A distinction is made between the following types:
0: No temperature compensation active
1: Position-independent temperature compensation active
(compensation value with SD43900 $SA_TEMP_COMP_ABS_VALUE)
2: Position-dependent temperature compensation active
(compensation value with SD43910 $SA_TEMP_COMP_SLOPE and SD43920 TEMP_COMP_REF_POSITION)
3: Position-dependent and position-independent temperature compensation active
(compensation values with SD according to types 1 and 2)
Temperature compensation is an option that must be enabled.

Related to:
SD43900 $SA_TEMP_COMP_ABS_VALUE
Position-dependent temperature compensation value
SD43920 $SA_TEMP_COMP_REF_POSITION
Reference point for position-dependent temperature compensation
SD43910 $SA_TEMP_COMP_SLOPE
Gradient for position-dependent temperature compensation
MD32760 $MA_COMP_ADD_VELO_FACTOR
Excessive velocity due to compensation

32760	COMP_ADD_VELO_FACTOR			EXP, A09, A04	K3
-	Excessive velocity due to compensation			DOUBLE	NEW CONF
CTEQ					
-	-	0.01	0.	0.10	0/0

Description:

The maximum distance that can be traversed because of temperature compensation in one IPO cycle can be limited by the axial MD32760 $MA_COMP_ADD_VELO_FACTOR.
If the resulting temperature compensation value is above this maximum, it is traversed over several IPO cycles. There is no alarm.
The maximum compensation value per IPO cycle is specified as a factor referring to the maximum axis velocity (MD32000 $MA_MAX_AX_VELO).
The maximum gradient of the temperature compensation tanbmax is also limited with this machine data.
Example of calculation of the maximum gradient tanb(max):
1. Calculation of the interpolator cycle time (see Description of Functions Velocities, Setpoint/Actual Value Systems, Cycle Times (G2))
Interpolator cycle time = Basic system clock rate * factor for interpolation cycle
Interpolator cycle time = MD10050 $MN_SYSCLOCK_CYCLE_TIME ^ MD10070 $MN_IPO_SYSCLOCK_TIME_RATIO
Example:
MD10050 $MN_SYSCLOCK_CYCLE_TIME = 0.004 [s]
MD10070 $MN_IPO_SYSCLOCK_TIME_RATIO = 3
-> Interpolator cycle time = 0.004 * 3 = 0.012 [s]
2. Calculation of the maximum velocity increase resulting from a change made to the temperature compensation parameter DvTmax
DvTmax = MD32000 $MA_MAX_AX_VELO * MD32760 $MA_COMP_ADD_VELO_FACTOR
Example: MD32000 $MA_MAX_AX_VELO = 10 000 [mm/min]
MD32760 $MA_COMP_ADD_VELO_FACTOR = 0.01
-> DvTmax = 10 000 * 0.01 = 100 [mm/min]
3. Calculation of the traverse distances per interpolator cycle

$$S1 \text{ (at vmax)} = 10\,000 \times \frac{0.012}{60} = 2.0 \text{ [mm]}$$

$$ST \text{ (at DvTmax)} = 100 \times \frac{0.012}{60} = 0.02 \text{ [mm]}$$

4. Calculation of tanbmax

$$tanbmax = \frac{ST}{S1} = \frac{0.02}{2} = 0.01$$ (corresponds to value for COMP_ADD_VELO_FACTOR)

-> bmax = arc tan 0.01 = 0.57 degrees

With larger values of SD43910 $SA_TEMP_COMP_SLOPE, the maximum gradient (here 0.57 degrees) for the position-dependent temperature compensation value is used internally. There is no alarm.

Note:

Any additional excessive velocity resulting from temperature compensation must be taken into account when defining the limit value for velocity monitoring (MD36200 $MA_AX_VELO_LIMIT).

MD irrelevant for:

MD32750 $MA_TEMP_COMP_TYPE = 0, sag compensation, LEC, backlash compensation

Related to:

MD32750 $MA_TEMP_COMP_TYPE

Temperature compensation type

SD43900 $SA_TEMP_COMP_ABS_VALUE

Position-independent temperature compensation value

SD43910 $SA_TEMP_COMP_SLOPE

Gradient for position-dependent temperature compensation

MD32000 $MA_MAX_AX_VELO

Maximum axis velocity

MD36200 $MA_AX_VELO_LIMIT

Threshold value for velocity monitoring

MD10070 $MN_IPO_SYSCLOCK_TIME_RATIO

Ratio of basic system clock rate to IPO cycle

MD10050 $MN_SYSCLOCK_CYCLE_TIME

Basic system clock rate

32800	EQUIV_CURRCTRL_TIME			EXP, A07, A09	G1,K3,S3,A2,A3, G2,S1,V1
s	Equiv. time const. current control loop for feedforward control			DOUBLE	NEW CONF
-					
-	6	0.0005, 0.0005, 0.0005, 0.0005, 0.0005, 0.0005	-	-	0/0

Description: The time constant is used for parameterizing the torque feedforward control and for calculating the dynamic following error model (contour monitoring).
In order to set the torque feedforward control correctly, the equivalent time constant of the current control loop must be determined exactly by measuring the step response of the current control loop.
Closed-loop control free of following errors can be set by inputting negative values when MD32620 $MA_FFW_MODE=4 (but positioning overshoots may then occur).
Delay values taken into account automatically by the software internally are thus compensated again until the actually active minimum symmetrizing time "0" is reached.

Any other negative input values have no further effect.
Negative values input when MD32620 $MA_FFW_MODE=2 are automatically converted internally to the input value "0", which means that they are not active in this case.
Related to:
MD32620 $MA_FFW_MODE
Type of feedfoward control
MD32650 $MA_AX_INERTIA
Moment of inertia for torque feedforward control
or MD32652 $MA_AX_MASS
Axis mass for torque feedforward control
MD36400 $MA_CONTOUR_TOL
Tolerance band contour monitoring

32810	EQUIV_SPEEDCTRL_TIME			A07, A09	G1,K3,S3,A2,A3, G2,S1,V1
s	Equiv. time constant speed control loop for feedforward control			DOUBLE	NEW CONF
-					
-	6	0.003, 0.003, 0.003, 0.003, 0.003...	-	-	2/2

Description: This time constant must be equal to the equivalent time constant of the closed current control loop.
It is used for parameterizing the speed feedforward control and for calculating the dynamic following error model (contour monitoring).
In addition, this MD determines the time behavior of the closed-loop speed control circuit for simulated drives (MD30130 $MA_CTRLOUT_TYPE 0).
In order to set the speed feedforward control correctly, the equivalent time constant of the current control loop must be determined exactly by measuring the step response of the current control loop.
Closed-loop control free of following errors can be set by inputting negative values when MD32620 $MA_FFW_MODE=3 (but positioning overshoots may then occur).
Delay values taken into account automatically by the software internally are thus compensated again until the actually active minimum symmetrizing time "0" is reached.
Any other negative input values have no further effect.
Negative values input when MD32620 $MA_FFW_MODE=1 are automatically converted internally to the input value "0", which means that they are not active in this case.
Related to:
MD32620 $MA_FFW_MODE (type of feedfoward control)
MD32610 $MA_VELO_FFW_WEIGHT (moment of inertia for speed feedforward control)
MD36400 $MA_CONTOUR_TOL (tolerance band contour monitoring)

32900	DYN_MATCH_ENABLE			A07	G21,S3,G2
-	Dynamic response adaptation			BOOLEAN	NEW CONF
CTEQ					
-	-	FALSE	-	-	1/1

Description: With dynamic response adaptation, axes with different servo gain factors can be set to the same following error with MD32910 $MA_DYN_MATCH_TIME.
1: Dynamic response adaptation active.
0: Dynamic response adaptation inactive.
Related to:
MD32910 $MA_DYN_MATCH_TIME[n]
(time constant of dyamic response adaptation)

32910	DYN_MATCH_TIME			A07	G1,K3,S3,A2,A3, G2,S1,V1
s	Time constant of dynamic response adaptation			DOUBLE	NEW CONF
-					
-	6	0.0, 0.0, 0.0, 0.0, 0.0, 0.0	-	-	1/1

Description: The time constant of the dynamic response adaptation of an axis has to be entered in this MD.
Axes interpolating with each other but having different dynamic responses can be adapted to the "slowest" control loop by means of this value.
The difference of the equivalent time constant of the "slowest" control loop to the individual axis has to be entered here as the time constant of the dynamic response adaptation.
The MD is only active if MD32900 $MA_DYN_MATCH_ENABLE = 1.
Related to:
MD32900 $MA_DYN_MATCH_ENABLE (dynamic response adaptation)

32920	AC_FILTER_TIME			A10	-
s	Smoothing filter time constant for adaptive control			DOUBLE	PowerOn
-					
-	-	0.0	-	-	0/0

Description: For SIMODRIVE611D (as well as for PROFIdrive drives, provided that they transport the following actual drive values in the PROFIdrive message frame, e.g. MD13060 $MN_DRIVE_TELEGRAM_TYPE = 116):
With the main run variables $AA_LOAD, $AA_POWER, $AA_TORQUE and $AA_CURR, the following drive actual values can be measured:
- Drive utilization
- Drive active power
- Drive torque setpoint value
- Current actual value of the axis or spindle

To compensate any peaks, the measured values can be smoothed with a PT1 filter. The filter time constant is defined via MD32920 $MA_AC_FILTER_TIME (filter smoothing time constant for adaptive control).
When measuring the drive torque setpoint value or the current actual value, the filter is active in addition to the filters available in the drive. The two filters are connected in series, if both strongly and slightly smoothed values are required in the system. The filter is switched off when a smoothing time of 0 seconds is entered.

32930	POSCTRL_OUT_FILTER_ENABLE			A07	G2
-	Activation of low-pass filter at position controller output			BOOLEAN	NEW CONF
CTEQ					
-	-	FALSE	-	-	0/0

Description: Activation of low-pass filter at position controller output.
Activation of the low-pass filter is only enabled when the dynamic stiffness control is inactive MD32640=0.

32940	POSCTRL_OUT_FILTER_TIME			A07	G2
s	Time constant of low-pass filter at position controller output			DOUBLE	NEW CONF
-					
-	-	0.0	-	-	0/0

Description: Time constant of low-pass filter at position controller output
Related to:
MD32640 $MA_STIFFNESS_CONTROL_ENABLE (dynamic stiffness control)

32950	POSCTRL_DAMPING			EXP, A07	G2
%	Damping of the speed control circuit.			DOUBLE	NEW CONF
-					
-	-	0.0	-	-	0/0

Description: Application:
Attenuation of an oscillating axis through additional activation of a rotational speed difference, which is determined from the difference of the two measuring systems.
Condition: the axis must have two measuring systems, while one encoder must be connected directly, the other indirectly.
Explanation of normalization by means of SIMODRIVE611D:
An input value of "100%" means: An additional torque is activated in accordance with drive MD 1725, if

- a positional deviation of 1mm exists on linear motors
- a load-side positional deviation of 360 degrees exists on rotary axes
- a positional deviation corresponding to MD31030 $MA_LEADSCREW_PITCH (e.g. 10mm as a standard) exists on linear axes (rot. drive).

33000	FIPO_TYPE			EXP, A07	G1,G3,S3,G2
-	Fine interpolator type			BYTE	PowerOn
CTEQ					
802d-cu3	-	2	1	3	0/0
802d-ng2	-	1	1	3	0/0
802d-ng3	-	2	1	3	0/0
802d-tm1	-	1	1	3	0/0
802d-tm2	-	1	1	3	0/0
802d-tm3	-	2	1	3	0/0

Description: The type of the fine interpolator has to be entered in this MD:
1: differential FIPO
2: cubic FIPO
3: cubic FIPO, optimized for operation with feedforward control

Calculation time required and contour quality increase with increasing type of FIPO.

- The default setting is the cubic FIPO.
- If no feedforward control is used in the position control loop, the use of the differential FIPO reduces the calculation time while slightly increasing the contour error.
- If the position control cycle and the interpolation cycle are identical, fine interpolation does not take place, i.e. the different types of fine interpolator do not have different effects.

33050	LUBRICATION_DIST			A03, A10	A2,Z1
mm, degrees	Traversing path for lubrication from PLC			DOUBLE	NEW CONF
-					
-	-	1.0e8	-	-	3/3

Description:

After the traversing path defined in the MD has been covered, the state of the axial interface signal "Lubrication pulse" is inverted, this can activate an automatic lubrication device.

The traversing path is summated after Power on.

The "Lubrication pulse" can be used with axes and spindles.

Application example(s):

The machine bed lubrication can be carried out as a function of the relevant traversed path.

Note:

When 0 is entered, the NC/PLC interface signal V390x 1002.0 (Lubrication pulse) is set in every cycle.

Related to:

NC/PLC interface signal V390x 1002.0 (Lubrication pulse)

33060	MAINTENANCE_DATA			A10	W6,2.4,6.2
-	Configuration of maintenance data recording			DWORD	Reset
-					
-	-	1	-	-	1/1

Description:

Configuration of axis maintenance data recording:

Bit 0:

Recording the entire traversing path, entire traversing time and number of axis traversing procedures

Bit 1:

Recording the entire traversing path, entire traversing time and number of traversing procedures at high axis speed

Bit 2:

Recording the total sum of axis jerks, the time in which the axis is traversed with jerk, and the number of traversing procedures with jerk.

2.4.4 Reference point approach

34000	REFP_CAM_IS_ACTIVE			A03, A11	G1,R1
-	Axis with reference point cam			BOOLEAN	Reset
-					
-	-	TRUE	-	-	2/2

Description:

1: There is at least one reference point cam for this axis
0: This axis does not have a reference point cam (e.g. rotary axis)
The referencing cycle starts immediately with phase 2 (see documentation)
Machine axes that have only one zero mark over the whole travel range or rotary axes that have only one zero mark per revolution do not require an additional reference cam that selects the zero mark (select MD34000 $MA_REFP_CAM_IS_ACTIVE = 0).
The machine axis marked this way accelerates to the velocity specified in MD34040 $MA_REFP_VELO_SEARCH_MARKER (reference point creep velocity) when the plus/minus traversing key is pressed, and synchronizes with the next zero mark.

34010	REFP_CAM_DIR_IS_MINUS			A03, A11	G1,R1
-	Approach reference point in minus direction			BOOLEAN	Reset
-					
-	-	FALSE	-	-	2/2

Description:

0: MD34010 $MA_REFP_CAM_DIR_IS_MINUS Reference point approach in plus direction
1: MD34010 $MA_REFP_CAM_DIR_IS_MINUS Reference point approach in minus direction
For incremental measuring systems:
If the machine axis is positioned in front of the reference cam, it accelerates, depending on the plus/minus traversing key pressed, to the velocity specified in MD34020 $MA_REFP_VELO_SEARCH_CAM (reference point approach velocity) in the direction specified in MD34010 $MA_REFP_CAM_DIR_IS_MINUS. If the wrong traversing key is pressed, reference point approach is not started.
If the machine axis is positioned on the reference cam, it accelerates to the velocity specified in MD34020 $MA_REFP_VELO_SEARCH_CAM and travels in the direction opposite to that specified in MD34010 $MA_REFP_CAM_DIR_IS_MINUS.
Note on absolute encoders:
The direction of the traverse key is also important for adjusting the absolute encoder: approach direction for fixed position and updating the values in MD34090 $MA_REFP_MOVE_DIST_CORR und MD34210 $MA_ENC_REFP_STATE.

34020	REFP_VELO_SEARCH_CAM			A03, A11, A04	G1,R1
mm/min, rev/min	Reference point approach velocity			DOUBLE	Reset
-					
-	-	5000.00,5000.00,5000.00,5000.00...	-	-	2/2

Description:

The reference point approach velocity is the velocity at which the machine axis travels in the direction of the reference cam after the traversing key has been pressed (phase 1). This value should be set at a magnitude large enough for the axis to be stopped to 0 before it reaches a hardware limit switch.
MD irrelevant for:
Linear measuring systems with distance-coded reference marks

34030	REFP_MAX_CAM_DIST			A03, A11	G1,R1
mm, degrees	Maximum distance to reference cam			DOUBLE	Reset
-					
-	-	10000.0	-	-	2/2

Description: If the machine axis travels a maximum distance defined in MD34030 $MA_REFP_MAX_CAM_DIST from the starting position in the direction of the reference cam, without reaching the reference cam (NC/PLC interface signal V380x1000.7 (Reference point approach delay) is reset), the axis stops and alarm 20000 "Reference cam not reached" is output.
Irrelevant to:
Linear measuring systems with distance-coded reference marks

34040	REFP_VELO_SEARCH_MARKER			A03, A11, A04	G1,R1,S1
mm/min, rev/min	Creep velocity			DOUBLE	Reset
-					
-	1	300.00, 300.00,300.00, 300.00...	-	-	2/2

Description: 1) For incremental measuring systems:
This is the velocity at which the axis travels during the time between initial detection of the reference cam and synchronization with the first zero mark (phase 2).
Traversing direction: Opposite to the direction specified for the cam search (MD34010 $MA_REFP_CAM_DIR_IS_MINUS)
If MD34050 $MA_REFP_SEARCH_MARKER_REVERSE (direction reversal on reference cam) is enabled, then if the axis is synchronized with a rising reference cam signal edge on the cam, the axis traverses at the velocity defined in MD34020 $MA_REFP_VELO_SEARCH_CAM.
2) Indirect measuring system with BERO on the load-side (preferred for spindles):
At this velocity, a search is made for the zero mark associated with the BERO (zero mark selection per VDI signal). The zero mark is accepted if the actual velocity lies within the tolerance range defined in MD35150 $MA_SPIND_DES_VELO_TOL as a deviation from the velocity specified in MD34040 $MA_REFP_VELO_SEARCH_MARKER[n].
3) For linear measuring systems with distance-coded reference marks:
The axis crosses the two reference marks at this velocity. The maximum velocity must be low enough to ensure that the time required to travel the smallest possible reference mark distance [(x(minimum)] on the linear measuring system is longer than one position controller cycle.

The formula

$$[x(minimum)]\ [mm] = \frac{\text{Basic dist.}}{2} * \text{Grad.cycle} - \frac{\text{Meas.length}}{\text{Basic dist.}}$$

with Basic distance [multiple of graduation cycle]
Graduation cycle [mm]
Measuring length [mm] yields:

$$\text{max. velocity [m/s]} = \frac{x(minimum)\ [mm]}{\text{Position controller cycle [ms]}}$$

This limiting value consideration also applies to the other measuring systems.

Traversing direction:

- as defined in MD34010 $MA_REFP_CAM_DIR_IS_MINUS;
- if the axis is already positioned on the cam, the axis is traversed in the opposite direction

34050	REFP_SEARCH_MARKER_REVERSE			A03, A11	G1,R1
-	Direction reversal to reference cam			BOOLEAN	Reset
-					
-	1	FALSE, FALSE	-	-	2/2

Description:

This MD can be used to set the direction of search for the zero mark:

MD34050 $MA_REFP_SEARCH_MARKER_REVERSE = 0

Synchronization with falling reference cam signal edge

The machine axis accelerates to the velocity specified in MD34040 $MA_REFP_VELO_SEARCH_MARKER (reference point creep velocity) in the opposite direction to that specified in MD34010 $MA_REFP_CAM_DIR_IS_MINUS (reference point approach in minus direction).

If the axis leaves the reference cam (NC/PLC interface signal V380x1000.7 (Reference point approach delay) is reset) the control is synchronized with the first zero mark.

MD34050 $MA_REFP_SEARCH_MARKER_REVERSE = 1

Synchronization with rising reference cam signal edge

The machine axis accelerates to the velocity defined in MD34020 $MA_REFP_VELO_SEARCH_CAM (reference point creep velocity) in the opposite direction to that specified in the MD34010 $MA_REFP_CAM_DIR_IS_MINUS. If the axis leaves the reference cam (NC/PLC interface signal V380x1000.7 (Reference point approach delay) is reset), the machine axis decelerates to a halt and accelerates in the opposite direction towards the reference cam at the velocity specified in MD34040: $MA_REFP_VELO_SEARCH_MARKER. When the reference cam is reached (NC/PLC interface signal V380x1000.7 (Reference point approach delay) is enabled) the control is synchronized with the first zero mark.

MD irrelevant to:

Linear measuring systems with distance-coded reference marks

34060	REFP_MAX_MARKER_DIST			A03, A11	G1,R1,S1
mm, degrees	maximum distance to reference mark			DOUBLE	Reset
-					
-	1	20.0, 20.0,20.0, 20.0,20.0, 20.0...	-	-	2/2

Description:

For incremental measuring systems:

If, after leaving the reference cam (NC/PLC interface signal V380x1000.7 (Reference point approach delay) is reset), the machine axis travels a distance defined in MD34060: $MA_REFP_MAX_MARKER_DIST without detecting the zero mark, the axis stops and alarm 20002 "Zero mark missing" is output.

For linear measuring systems with distance-coded reference marks:

If the machine axis travels a distance defined in MD34060 $MA_REFP_MAX_MARKER_DIST from the starting position without crossing two zero marks, the axis stops and alarm 20004 "Reference mark missing" is output.

34070	REFP_VELO_POS			A03, A11, A04	G1,R1
mm/min, rev/min	Reference point positioning velocity			DOUBLE	Reset
-					
-	-	10000.00,10000.00,10000.00,10000.00...	-	-	2/2

Description: For incremental measuring systems:

The axis travels at this velocity between the time of synchronization with the first zero mark and arrival at the reference point.

For linear measuring systems with distance-coded reference marks:

The axis travels at this velocity between the time of synchronization (crossing two zero marks) and arrival at the target point.

34080	REFP_MOVE_DIST			A03, A11	G1,R1,S1,S3,G2
mm, degrees	Reference point distance			DOUBLE	NEW CONF
-					
-	1	-2.0, -2.0	-1e15	1e15	2/2

Description: 1. Standard measuring system (incremental with equidistant zero marks)
Reference point positioning movement: 3rd phase of the reference point approach:
The axis traverses from the position at which the zero mark is detected with the velocity REFP_AX_VELO_POS along the path REFP_MOVE_DIST + REFP_MOVE_DIST_CORR (relative to the marker).
REFP_SET_POS is set as the current axis position at the target point.
2. Irrelevant for distance-coded measuring system.
Override switch and selection jog/continuous mode (MD JOG_INC_MODE_IS_CONT) are active.

34090	REFP_MOVE_DIST_CORR			A03, A02, A08, A11	G1,R1,S1,S3,G2
mm, degrees	Reference point offset/absolute offset			DOUBLE	NEW CONF
-, -					
-	1	0.0, 0.0	-1e12	1e12	2/2

Description:
- Incremental encoder with zero mark(s):

After detection of the zero mark, the axis is positioned away from the zero mark by the distance specified in MD34080 $MA_REFP_MOVE_DIST + MD34090 $MA_REFP_MOVE_DIST_CORR. After traversing this distance, the axis has reached the reference point. MD34100 $MA_REFP_SET_POS is transferred into the actual value.
During traversing by MD34080 $MA_REFP_MOVE_DIST + MD34090 $MA_REFP_MOVE_DIST_CORR, the override switch and MD11300 $MN_JOG_INC_MODE_LEVELTRIGGRD (jog/continuous mode) are active.

- Distance-coded measuring system:

MD34090 $MA_REFP_MOVE_DIST_CORR acts as an absolute offset. It describes the offset between the machine zero and the first reference mark of the measuring system.

- Absolute encoder:

MD34090 $MA_REFP_MOVE_DIST_CORR acts as an absolute offset.
It describes the offset between the machine zero and the zero point of the absolute measuring system.

Note:
In conjunction with absolute encoders, this MD is modified by the control during calibration processes and modulo offset.
With rotary absolute encoders (on linear and rotary axes), the modification frequency also depends on the setting of MD34220 $MA_ENC_ABS_TURNS_MODULO.
Manual input or modification of this MD via the part program should therefore be followed by a Power ON Reset to activate the new value and prevent it from being lost.
The following applies to an NCU-LINK:
If a link axis uses an absolute encoder, every modification of MD34090 $MA_REFP_MOVE_DIST_CORR on the home NCU (servo physically available) is updated only locally and not beyond the limits of the NCU. The modification is therefore not visible to the link axis. Writing MD34090 $MA_REFP_MOVE_DIST_CORR through the link axis is rejected with alarm 17070.

34092	REFP_CAM_SHIFT			A03, A11	G1,R1
mm, degrees	electronic cam offset for incremental measuring systems			DOUBLE	Reset
-					
-	1	0.0, 0.0	-	-	2/2

Description: Electronic cam offset for incremental measuring systems with equidistant zero marks.
When the reference cam signal occurs, the zero mark search does not start immediately but is delayed until after the distance from REFP_CAM_SHIFT.
This ensures the reproducibility of the zero mark search through a defined selection of a zero mark, even with temperature-dependent expansion of the reference cam.
Because the reference cam offset is calculated by the control in the interpolation cycle, the actual cam offset is at least REFP_CAM_SHIFT and at most REFP_CAM_SHIFT+(MD34040 $MA_REFP_VELO_SEARCH_MARKER*interpolation cycle)
The reference cam offset is effective in the search direction of the zero mark.
The reference cam offset is only active if existing cam MD34000 $MA_REFP_CAM_IS_ACTIVE=1.

34093	REFP_CAM_MARKER_DIST			A03, A11	R1
mm, degrees	Reference cam/reference mark distance			DOUBLE	PowerOn
-					
-	1	0.0, 0.0	-	-	2/2

Description: The value displayed corresponds to the distance between exiting the reference cam and the occurrence of the reference mark. If the values are too small, there is a risk of not being able to determine the reference point due to temperature reasons or varying operating times of the cam signal. The distance travelled may serve as a clue for setting the electronic reference cam offset.
This machine data is a display data and can therefore not be changed.

34100	REFP_SET_POS			A03, A11	G1,S3,G2,R1,S1
mm, degrees	Reference point for incremental system			DOUBLE	Reset
-					
-	4	0., 0., 0., 0.	-45000000	45000000	2/2

Description:

- Incremental encoder with zero mark(s):

  The position value which is set as the current axis position after detection of the zero mark and traversal of the distance REFP_MOVE_DIST + REFP_MOVE_DIST_CORR (relative to zero mark). REFP_SET_POS of the reference point number, which is set as the instant that the edge of the reference cam signal rises (NC/PLC interface signal V380x 0002.4 - .7 (Reference point value 1 to 4)), is set as the axis position.

- Distance-coded measuring system:

Target position which is approached when MD34330 $MA_REFP_STOP_AT_ABS_MARKER is set to 0 (FALSE) and two zero marks have been crossed.

- Absolute encoder:

MD34100 $MA_REFP_SET_POS corresponds to the correct actual value at the calibration position.
The reaction on the machine depends on the status of MD34210 $MA_ENC_REFP_STATE: When MD34210 $MA_ENC_REFP_STATE = 1, the value of MD34100 $MA_REFP_SET_POS is transferred as the absolute value.
When MD34210 $MA_ENC_REFP_STATE = 2 and MD34330 $MA_REFP_STOP_AT_ABS_MARKER = 0 (FALSE), the axis approaches the target position stored in MD34100 $MA_REFP_SET_POS.
The value of MD34100 $MA_REFP_SET_POS that has been set via NC/PLC interface signal V380x 0002.4 - .7 (Reference point value 1 to 4) is used.
Related to:

NC/PLC interface signal V380x 0002.4 - .7 (Reference point value 1 to 4)

34102	REFP_SYNC_ENCS			A03, A02	R1,Z1
-	Calibration of measuring systems			BYTE	Reset
-					
-	-	0	0	1	0/0

Description:

Calibrating the measuring system to the reference measuring system can be activated for all measuring systems of this axis with this machine data.
The calibration procedure is made during reference point approach or when calibrated absolute encoders selected for the closed-loop control are switched on.
Values:
0: No measuring system calibration, measuring systems must be referenced individually
1: Calibration of all measuring systems of the axis to the position of the reference measuring system
In combination with MD30242 $MA_ENC_IS_INDEPENDENT = 2, the passive encoder is calibrated to the active encoder but NOT referenced.

34104	REFP_PERMITTED_IN_FOLLOWUP			A03, A02	R1
-	Enable referencing in follow-up mode			BOOLEAN	Reset
-					
-	-	FALSE	-	-	1/1

Description:

An axis can also be referenced in the follow-up mode under JOG+REF mode by means of an external motion.

34110	REFP_CYCLE_NR			A03	G1,TE3,D1,R1,Z1
-	Sequence of axes in channel-specific referencing			DWORD	PowerOn
-					
-	-	1,2,3,4,5,6,7,8,9,10,11,12,13,14,15,16,17,18.	-1	31	2/2

Description: MD34110 $MA_REFP_CYCLE_NR = 0 -----> axis-specific referencing

Axis-specific referencing is started separately for each machine axis with the NC/PLC interface signal V380x 0004.7 / 4.6 (Plus/minus travel keys).

Up to 8 axes (840D) can be referenced simultaneously.

The following alternatives are provided for referencing the machine axes in a specific sequence:

- The operator has to observe the correct sequence on startup.
- The PLC checks the sequence on startup or defines the sequence itself.
- The channel-specific referencing function is used.

MD34110 $MA_REFP_CYCLE_NR = 1 -----> channel-specific referencing

Channel-specific referencing is started with the NC/PLC interface signal V3200 0001.0 (Activate referencing). The control acknowledges a successful start with the NC/PLC interface signal V3300 0001.0 (Referencing active). Each machine axis assigned to the channel can be referenced with channel-specific referencing (this is achieved internally on the control by simulating the plus/minus traversing keys). The axis-specific MD34110 $MA_REFP_CYCLE_NR can be used to define the sequence in which the machine axes are referenced:

-1 means:

The machine axis is not started by channel-specific referencing, and NC start is possible without referencing this axis.

0 means:

The machine axis is not started by channel-specific referencing, and NC start is not possible without referencing this axis.

1 means:

The machine axis is started by channel-specific referencing.

2 means:

The machine axis is started by channel-specific referencing if all machine axes identified by a 1 in MD34110 $MA_REFP_CYCLE_NR are referenced.

3 means:

The machine axis is started by channel-specific referencing if all machine axes identified by a 2 in MD34110 $MA_REFP_CYCLE_NR are referenced.

4 to 8 :

As above for further machine axes.

Setting the channel-specific MD20700 $MC_REF_NC_START_LOCK (NC start disable without reference point) to zero has the effect of entering -1 for all the axes of a channel.

MD irrelevant to:

Axis-specific referencing

Related to:

NC/PLC interface signal V3200 0001.0 (Activate referencing)

NC/PLC interface signal V3300 0001.0 (Referencing active)

34200	ENC_REFP_MODE			A03, A02	G1,R1,S1
-	Referencing mode			BYTE	PowerOn
-					
-	1	1, 1	0	8	2/2

Description: The mounted position measuring systems can be classified for referencing as follows with MD34200 $MA_ENC_REFP_MODE:

- MD34200 $MA_ENC_REFP_MODE = 0

  If an absolute encoder is available: MD34100 $MA_REFP_SET_POS is taken over

  Other encoders: Reference point approach not possible MD34200 $MA_ENC_REFP_MODE = 1

  Incremental rotary measuring system

  Incremental linear measuring system

  Zero pulse on encoder track (not with absolute encoders)

  MD34200 $MA_ENC_REFP_MODE = 2

  BERO with 1-edge detection.

  Also possible with an absolute encoder. After referencing, the absolute encoder is additionally marked as "calibrated".

- MD34200 $MA_ENC_REFP_MODE = 3

  Referencing on linear measuring systems with distance-coded reference marks:

  Linear measuring system with distance-coded reference marks (as specified by Heidenhain)

- MD34200 $MA_ENC_REFP_MODE = 5:

  When the BERO is passed, the zero mark search is started when the negative BERO edge is detected, and it is referenced to the next zero mark detected.

- MD34200 $MA_ENC_REFP_MODE = 6

  Measuring system calibration to an already referenced encoder

  (not NCU 570)

- MD34200 $MA_ENC_REFP_MODE = 7

  BERO with configured approach velocity for axis and spindle applications (SW3.6 and higher) (MD34040 $MA_REFP_VELO_SEARCH_MARKER[n]

  (Reference point creep velocity [enc. no.].

- MD34200 $MA_ENC_REFP_MODE = 8

  Referencing for linear measuring systems with distance-coded reference marks:

  Linear measuring system with distance-coded reference marks over 4 zero marks (increased safety).

34210	ENC_REFP_STATE			A07, A03, A02	R1
-	Adjustment status of absolute encoder			BYTE	Immediately
-					
-	1	0, 0	0	3	2/2

Description:

- Absolute encoder:

  This machine data contains the absolute encoder status

0: Encoder is not calibrated
1: Encoder calibration enabled (but not yet calibrated)
2: Encoder is calibrated

Default setting for new startup: Encoder is not calibrated.

3: No significance, has the same effect as "0"

- Incremental encoder:

  This machine data contains the "Referenced status", which can be saved beyond Power On:

0: Default setting: No automatic referencing

1: Automatic referencing enabled, but encoder not yet referenced

2: Encoder is referenced and at exact stop, automatic referencing becomes active at the next encoder activation

3: The last axis position buffered before switch off is restored, no automatic referencing

Default setting for new startup: No automatic referencing

34220	ENC_ABS_TURNS_MODULO			A03, A02	R1
-	Modulo range for rotary absolute encoder			DWORD	PowerOn
-					
-	1	4096, 4096	1	100000	2/2

Description:

Number of encoder revolutions, which a rotary absolute encoder can resolve (cf. also maximum multiturn information of the absolute encoder, cf. encoder data sheet or, for example SIMODRIVE611D-MD 1021 or 1031 or PROFIdrive parameter p979).

The absolute position of a rotary axis is reduced to this resolvable range when an absolute encoder is switched on:

That means that a MODULO transformation takes place, if the actual position sensed is larger than the position permitted by MD ENC_ABS_TURNS_MODULO.

0 degree <= position <= n*360 degrees, (with n = ENC_ABS_TURNS_MODULO)

Note:

With SW 2.2, the position is reduced to this range when the control/ encoder is switched on. With SW 3.6 and higher, half of this value represents the maximum permissible travel distance with the control swiched off / the encoder inactive.

Special cases:

For PROFIdrive any integer values are permissible.

This MD is relevant only for rotary encoders (on linear and rotary axes).

Important recommendation:

The default value "1 encoder revolution" has been changed for SW 3.6 and higher to "4096". The new value is a more robust setting for the most frequently used encoder types.

When an encoder with a smaller multiturn information (encoder data sheet!) is used or when singleturn encoders are used, the value must be reduced accordingly. In either case, the value should be adjusted with multiturn absolute encoders to the maximum variable supported by the encoder, in order to be able to utilize the definite maximum travel range (Please observe: This value also influences the permissible position offset with the encoder inactive/ Power Off).

Related to:

PROFIdrive parameter p979

34230	ENC_SERIAL_NUMBER			A02	R1
-	Encoder serial number			DWORD	PowerOn
-					
-	1	0, 0	-	-	2/2

Description: The encoder serial number (from EnDat encoders) can be read out here.
It is updated at power ON (SIMODRIVE611D or PROFIdrive) or when parking is deselected (only PROFIdrive)
"0" is supplied for encoders which do not have a serial number available.
Manipulating this MD normally causes an automatic absolute encoder maladjustment ($MA_ENC_REFP_MODE returns to "0").

34232	EVERY_ENC_SERIAL_NUMBER			A02	R1
-	Range of encoder serial number			BOOLEAN	PowerOn
-					
-	1	TRUE, TRUE	-	-	2/2

Description: 0 = only valid encoder serial number are entered in the MD, i.e. when the drive supplies a "0" (which corresponds to invalid or unknown) the last valid encoder serial number is retained in the MD (e.g. for add-on axes that are not permanently connected to the machine).
1 = (default, upward compatible): the value supplied by the drive for the encoder serial number is taken over into the MD with every control runup. A validity check is not carried out.
Note for PROFIdrive drives:
As not every drive can supply the relevant parameters at all or in good time, the functionality is coded permanently corresponding to "0" for the PROFIdrive drive. A "1" setting is therefore ineffective on the PROFIBUS.

34300	ENC_REFP_MARKER_DIST			A03, A02	R1
mm, degrees	Basic distance of reference marks of distance-coded encoders.			DOUBLE	PowerOn
-					
-	1	10.0, 10.0	-	-	2/2

Description: In addition to the incremental encoder track, a further encoder track is available with distance-coded measuring systems for determining the absolute encoder position. This encoder track has reference marks at defined, different distances. The basic distance between the fixed reference marks (which are the reference marks that are always the same distance from one another) can be taken from the data sheet, and directly transferred into machine data MD34300 $MA_ENC_REFP_MARKER_DIST.
With the basic distance between the fixed reference marks (MD34300 $MA_ENC_REFP_MARKER_DIST), the distance between two reference marks (MD34310 $MA_ENC_MARKER_INC), and the number of encoder marks (MD31020 $MA_ENC_RESOL) on angular measuring systems or the graduation cycle (MD31010 $MA_ENC_GRID_POINT_DIST) on linear measuring systems, the absolute encoder position can be determined once two successive reference marks have been crossed.
MD34300 $MA_ENC_REFP_MARKER_DIST is also used for a plausibility check of reference mark distances.

Examples of application:
For example: Heidenhain LS186 C
MD 31010 = 0.02mm (graduation cycle)
MD 34300 = 20.00mm (basic distance between the reference marks)
MD 34310 = 0.02mm (distance between two reference marks corresponds to one graduation cycle).

34310	ENC_MARKER_INC			A03, A02	R1
mm, degrees	Interval between two reference marks for distance-coded scales			DOUBLE	Reset
-					
-	1	0.02, 0.02	-	-	2/2

Description: The distances between two reference marks are defined variably, so that the position of the crossed reference marks can be determined accurately in linear measuring systems with distance-coded reference marks.
The difference between two reference mark distances is entered in MD34310 $MA_ENC_MARKER_INC.
MD irrelevant for:
Incremental measuring systems
Special cases:
On linear measuring systems with distance-coded reference marks supplied by Heidenhain, the interval between two reference marks is always equal to one graduation cycle.

34320	ENC_INVERS			A03, A02	G2,R1
-	Length measuring system inverse to axis movement.			BOOLEAN	Reset
-					
-	1	FALSE, FALSE	-	-	2/2

Description:
- In the case of a distance-coded measuring system:

When setting a reference point, the actual position (determined by the distance-coded reference marks) on the linear measuring system is assigned to an exact machine axis position (referred to the machine zero point). The absolute offset between the machine zero point and the position of the 1st reference mark on the linear measuring system must therefore be entered in MD34090 $MA_REFP_MOVE_DIST_CORR (reference point/absolute offset). In addition, MD34320 $MA_ENC_INVERS must be used to set whether the linear measuring system is connected in the same or the opposite direction to the machine system.
MD irrelevant to:
Incremental encoders without distance-coded reference marks.

34330	REFP_STOP_AT_ABS_MARKER			A03	G1,R1
-	Distance-coded linear measuring system without target point			BOOLEAN	Reset
-					
-	1	TRUE, TRUE	-	-	2/2

Description:
- Distance-coded measuring system:

REFP_STOP_AT_ABS_MARKER = 0:
At the end of the reference cycle, the position entered in MD34100 $MA_REFP_SET_POS is approached (normal case for phase 2).
REFP_STOP_AT_ABS_MARKER = 1:
The axis is braked after detection of the second reference mark (shortening of phase 2)

- Absolute encoder:

MD34330 $MA_REFP_STOP_AT_ABS_MARKER defines the response of an axis with a valid calibration identifier (MD34210 $MA_ENC_REFP_STATE = 2) with G74 or when a traversing key is actuated in JOG-REF:
REFP_STOP_AT_ABS_MARKER = 0:
Axis traverses to the position entered in MD34100 $MA_REFP_SET_POS
REFP_STOP_AT_ABS_MARKER = 1:
Axis does not traverse.
MD irrelevant for:
Incremental encoders with zero mark (standard encoders)
Related to:
MD34100 $MA_REFP_SET_POS
(reference point distance/target point for distance-coded system)

34990	ENC_ACTVAL_SMOOTH_TIME			A02	V1
s	Smoothing time constant for actual values.			DOUBLE	Reset
-					
-	1	0.0, 0.0	0.0	0.5	3/3

Description: Using low-resolution encoders, a more continuous motion of coupled path or axis motions can be achieved with smoothed actual values. The bigger the time constant, the better the smoothing of actual values and the larger the over-travel.
Smoothed actual values are used for:

- Thread-cutting (G33, G34, G35)
- Revolutional feedrate (G95, G96, G97, FPRAON)
- Display of actual position and velocity, or speed respectively.

2.4.5 Spindles

35000	SPIND_ASSIGN_TO_MACHAX			A01, A06, A11	M1,S3,K2,S1
-	Assignment of spindle to machine axis			BYTE	PowerOn
-					
-	-	0,0,0,

With multi-channel systems, the same numbers can be assigned in all channels, except for those spindles active in several channels (replacement axes/spindles MD 30550: $MA_AXCONF_ASSIGN_MASTER_CHAN).

35010	GEAR_STEP_CHANGE_ENABLE			A06, A11	P3 pl,P3 sl,S1
-	Parameterize gear stage change			DWORD	Reset
CTEQ					
-	-	0x00	0	0x2B	2/2

Description:

Meaning of bit places:

Bit 0 = 0 and bit 1 = 0:

There is an invariable gear ratio between motor and load. The MD of the first gear stage are active. Gear stage change is not possible with M40 to M45.

Bit 0 = 1:

Gear stage change at undefined change position. The gear can have up to 5 gear stages, which can be selected with M40, M41 to M45. To support the gear stage change, the motor can carry out oscillating motions, which must be enabled by the PLC program.

Bit 1 = 1:

Same meaning as for bit 0 = 1, however, the gear stage change is carried out at a configured spindle position (SW 5.3 and higher). The change position is configured in MD35012 $MA_GEAR_STEP_CHANGE_POSITION. The position is approached in the current gear stage before the gear stage change. If this bit is set, bit 0 is not taken into account!

Bit 2: reserved

Bit 3 = 1:

The gear stage change dialog between NCK and PLC is simulated. An NCK-internal acknowledgement is given. PLC signals for the change are output, checkback signals from the PLC are ignored because of the NCK-internal acknowledgement.

Bit 4: reserved

Bit 5 = 1:

The second gear stage data set is used for tapping with G331/G332. The bit must be set for the master spindle used for tapping. Bit 0 or bit 1 must be set.

Related to:

MD35090 $MA_NUM_GEAR_STEPS (number of gear stages 1st data set, see bit 5)

MD35092 $MA_NUM_GEAR_STEPS2 (number of gear stages 2nd data set, see bit 5)

MD35110 $MA_GEAR_STEP_MAX_VELO (max. speed for autom. gear stage change)

MD35112 $MA_GEAR_STEP_MAX_VELO2 (max. speed for autom. gear stage change 2nd data set, see bit 5)

MD35120 $MA_GEAR_STEP_MIN_VELO (min. speed for autom. gear stage change)

MD35122 $MA_GEAR_STEP_MIN_VELO2 (min. speed for autom. gear stage change 2nd data set, see bit 5)

35012	GEAR_STEP_CHANGE_POSITION			A06, A11	S1
mm, degrees	Gear stage change position			DOUBLE	NEW CONF
CTEQ					
-	6	0.0, 0.0, 0.0, 0.0, 0.0, 0.0	-	-	2/2

Description: Gear stage change position.
The value range must be within the configured modulo range.
Related to:
MD35010 $MA_GEAR_STEP_CHANGE_ENABLE, bit 1
MD30330 $MA_MODULO_RANGE

35014	GEAR_STEP_USED_IN_AXISMODE			A01, A06, A11	-
-	Gear stage for axis mode with M70			DWORD	NEW CONF
CTEQ					
-	-	0	0	5	2/2

Description: With this MD, a gear stage can be defined which can be loaded into the axis mode during the transition with M70. The parameter set zero used in axis mode is to be optimized on this gear stage.
Significance of the values:
0: There is no implicit gear stage change with M70.
The current gear stage is retained.
1 ... 5:
There is a change into gear stage (1...5) during the execution of M70.
During the transition into axis mode without M70, there is monitoring for this gear stage and alarm 22022 is issued if necessary. The condition for a gear stage change is the general release of the function in MD35010 $MA_GEAR_STEP_CHANGE_ENABLE.
Secondary conditions:
When changing from axis mode into spindle mode, the configured gear stage continues to remain active. There is no automatic return to the last active gear stage in spindle mode.

35020	SPIND_DEFAULT_MODE			A06, A10	S1
-	Initial spindle setting			BYTE	Reset
CTEQ					
-	-	0	0	3	2/2

Description: SPIND_DEFAULT_MODE activates the operating mode of the spindle at the time specified in MD35030 $MA_SPIND_DEFAULT_ACT_MASK. The appropriate spindle operating modes can be selected with the following values:
0 Speed mode, position control deselected
1 Speed mode, position control activated
2 Positioning mode
3 Axis mode
Related to:
MD35030 $MA_SPIND_DEFAULT_ACT_MASK (activate initial spindle setting)

35030	SPIND_DEFAULT_ACT_MASK			A06, A10	S1
-	Time at which initial spindle setting is effective			BYTE	Reset
CTEQ					
-	-	0x00	0	0x03	2/2

Description: SPIND_DEFAULT_ACT_MASK specifies the time at which the operating mode defined in MD35020 $MA_SPIND_DEFAULT_MODE becomes effective. The initial spindle setting can be assigned the following values at the following points in time:

0 POWER ON

1 POWER ON and NC program start

2 POWER ON and RESET (M2/M30)

Special cases:

If MD35040 $MA_SPIND_ACTIVE_AFTER_RESET = 1, the following supplementary conditions are applicable:

- SPIND_DEFAULT_ACT_MASK should be set to 0
- If this is not possible, the spindle must be at a standstill prior to activation.

Related to:

MD35020 $MA_SPIND_DEFAULT_MODE (initial spindle setting)

MD35040 $MA_SPIND_ACTIVE_AFTER_RESET (spindle active after reset)

35032	SPIND_FUNC_RESET_MODE			A06, A10	-
-	Reset response of individual spindle functions			DWORD	PowerOn
CTEQ					
-	-	0x00	0	0x01	1/1

Description: This data allows the "GWPS in every operating mode" function to be selected/deselected.

SPIND_FUNC_RESET_MODE, bit 0 = 0 : "GWPS in every operating mode" is deselected

SPIND_FUNC_RESET_MODE, bit 0 = 1 : "GWPS in every operating mode" is selected

35035	SPIND_FUNCTION_MASK			A06, A10	K1,S1
-	Spindle functions			DWORD	Reset
CTEQ					
-	-	0x510	-	-	1/1

Description: This MD allows spindle-specific functions to be set.

The MD is bit-coded, the following bits are assigned:

Bit 0 = 1: Gear stage changes are suppressed when the DryRun function is activated for
block programming (M40, M41 to M45), programming via FC18 and synchronized actions.

Bit 1 = 1: Gear stage changes are suppressed when the Program test function is activated for
block programming (M40, M41 to M45), programming via FC18 and synchronized actions.

Bit 2 = 1: The gear stage will finally be changed to the programmed gear stage
by REPOS after the DryRun or Program test function has been deselected.

Bit 3: Reserved
Bit 4 = 1:
The programmed speed is taken over into SD 43200 $SA_SPIND_S (incl. speed default settings via FC18 and synchronized actions).
S programmings, that are not speed programmings, are not written into the SD. These include, for example, S value with constant cutting speed (G96, G961), S value with revolution-related dwell time (G4).
Bit 5 = 1:
The content of SD 43200 $SA_SPIND_S acts as speed setpoint for JOG. If the content is zero, then other JOG speed default settings become active (see SD 41200 JOG_SPIND_SET_VELO).
Bit 6: Reserved
Bit 7: Reserved
Bit 8 = 1:
The programmed cutting speed is taken over into SD 43202 $SA_SPIND_CONSTCUT_S (incl. default settings via FC18. S programmings, that are not cutting speed programmings, are not written into the SD. These include, for example, S value beyond constant cutting speed (G96, G961, G962), S value with revolution-related dwell time (G4), S value in synchronized actions.
Bit 9: Reserved
Bit 10 = 0:
SD 43206 $SA_SPIND_SPEED_TYPE is not changed by part program or channel settings,
= 1:
For the master spindle, the value of the 15th G group (type of feedrate) is taken over into SD 43206 $SA_SPIND_SPEED_TYPE. For all other spindles, the corresponding SD remains unchanged.
Bit 11: Reserved
Bit 12 = 1:
Spindle override is active for zero mark search for M19, SPOS and SPOSA
= 0:
Previous behavior (default)
The following bits 16-20 can be used to set spindle-specific M functions, which are output to the VDI interface,
if the associated M functionality has been implicitly generated for the program run.
Bit 16: Reserved
Bit 17: Reserved
Bit 18: Reserved
Bit 19:"Output of implicit M19 to PLC"
= 0: If MD20850 $MC_SPOS_TO_VDI is also 0, then auxiliary function M19 is not generated with SPOS and SPOSA. Therefore, there is no acknowledgement time for the M function. This can cause faults in short blocks.
= 1: When SPOS and SPOSA are programmed, the implicit auxiliary function M19 is generated, and output to the PLC. The address extension corresponds to the spindle number.
Bit 20:"Output of implicit M70 to PLC"
= 0: The implicit auxiliary function M70 is not generated. Note: A programmed auxiliary function M70 is always output to the PLC.
= 1: The transition to axis mode implicitly generates the auxiliary function M70, and it is output to the PLC. The address extension corresponds to the spindle number.

Related to:
MD20850 $MC_SPOS_TO_VDI
MD35040 $MA_SPIND_ACTIVE_AFTER_RESET
MD35020 $MA_SPIND_DEFAULT_MODE
SD43200 $SA_SPIND_S

35040	SPIND_ACTIVE_AFTER_RESET			A06, A10	S1,Z1,2.7
-	Own spindle RESET			BYTE	PowerOn
CTEQ					
-	-	0	0	2	2/2

Description: MD35040 $MA_SPIND_ACTIVE_AFTER_RESET defines the response of the spindle after channel reset NC/PLC interface signal V3000 0000.7 (Reset) and program end (M2, M30).
This MD is only active in the spindle mode open-loop control mode. In positioning mode or oscillation mode, the spindle is always stopped.
MD35040 $MA_SPIND_ACTIVE_AFTER_RESET = 0:
- Spindle stops (with M2/M30 and channel and mode group reset)
- Program is aborted

MD35040 $MA_SPIND_ACTIVE_AFTER_RESET= 1:
- Spindle does not stop
- Program is aborted

MD35040 $MA_SPIND_ACTIVE_AFTER_RESET= 2:
- Spindle does not stop at the M function configured via MD10714 $MN_M_NO_FCT_EOP (e.g. M32).
- However, the spindle stops at channel or mode group reset.

The NC/PLC interface signal V380x 0002.2 (Delete distance-to-go/Spindle reset) is always effective, independent of MD35040 $MA_SPIND_ACTIVE_AFTER_RESET..
Not relevant to:
- Spindle modes other than open-loop control mode.

Related to:
NC/PLC interface signal V3000 0000.7 (Reset)
NC/PLC interface signal V380x 0002.2 (Delete distance-to-go/Spindle reset)

35090	NUM_GEAR_STEPS			A06, A10	S1
-	Number of gear stages			DWORD	Reset
-					
-	-	MAXNUM_GEAR_STEPS	1	5	1/1

Description: Number of set gear stages.
The first gear stage is always available.
Corresponding MDs:
MD35010 $MA_GEAR_STEP_CHANGE_ENABLE (gear stages available/functions)
MD35012 $MA_GEAR_STEP_CHANGE_POSITION (gear stage change position)
MD35014 $MA_GEAR_STEP_USED_IN_AXISMODE (gear stage for axis mode with M70)
MD35110 $MA_GEAR_STEP_MAX_VELO (max. speed for gear stage change)
MD35120 $MA_GEAR_STEP_MIN_VELO (min. speed for gear stage change)
MD35130 $MA_GEAR_STEP_MAX_VELO_LIMIT (max. speed of gear stage)
MD35140 $MA_GEAR_STEP_MIN_VELO_LIMIT (min. speed of gear stage)
MD35200 $MA_GEAR_STEP_SPEEDCTRL_ACCEL (acceleration in speed control mode)
MD35210 $MA_GEAR_STEP_POSCTRL_ACCEL (acceleration in position control mode)

MD35310 $MA_SPIND_POSIT_DELAY_TIME (positioning delay time)
MD35550 $MA_DRILL_VELO_LIMIT (maximum speeds for tapping)
MD35092 $MA_NUM_GEAR_STEPS2 (number of gear stages 2nd gear stage data set)

35092	NUM_GEAR_STEPS2			A06, A10	S1
-	Number of gear stages of 2nd gear stage data set			DWORD	Reset
-					
-	-	MAXNUM_GEAR_STEPS	1	5	1/1

Description: Number of set gear stages of the second gear stage data set for the function 'Tapping with G331/G332'.
Activation (only makes sense for master spindle on tapping): MD 35010 $MA_GEAR_STEP_CHANGE_ENABLE, bit 5.
The number of gear stages must not be the same in the first and second gear stage data sets.
Corresponding MD:
MD35010 $MA_GEAR_STEP_CHANGE_ENABLE (gear stages available/functions)
MD35112 $MA_GEAR_STEP_MAX_VELO2 (2nd gear stage data set: max. speed for gear stage change)
MD35122 $MA_GEAR_STEP_MIN_VELO2 (2nd gear stage data set: min. speed for gear stage change)
MD35212 $MA_GEAR_STEP_POSCTRL_ACCEL2 (2nd gear stage data set: acceleration in position control mode)

35100	SPIND_VELO_LIMIT			A06, A11, A04	TE3,G2,S1,V1,Z1
rev/min	Maximum spindle speed			DOUBLE	PowerOn
CTEQ					
-	-	10000.0	1.0e-3	-	7/2

Description: MD35100 $MA_SPIND_VELO_LIMIT defines the maximum spindle speed which the spindle (the spindle chuck with the workpiece or the tool) must not exceed. The NCK limits an excessive spindle setpoint speed to this value. If the maximum actual spindle speed is exceeded, even allowing for the spindle speed tolerance (MD35150 $MA_SPIND_DES_VELO_TOL), there is a fault with the drive and the NC/PLC interface signal V390x 2001.0 (Speed limit exceeded) is set. Alarm 22050 "Maximum speed reached" is also output and all axes and spindles on the channel are decelerated (provided the encoder is still functioning correctly).
Related to:
MD35150 $MA_SPIND_DES_VELO_TOL (spindle speed tolerance)
NC/PLC interface signal V390x 2001.0 (Speed limit exceeded)
Alarm 22050 "Maximum speed reached"

35110	GEAR_STEP_MAX_VELO			A06, A11, A04	A3,S1
rev/min	Maximum speed for gear stage change			DOUBLE	NEW CONF
CTEQ					
-	6	500., 500., 1000., 2000., 4000., 8000.	-	-	2/2

Description:

MD35110 $MA_GEAR_STEP_MAX_VELO defines the maximum speed of the gear stage for automatic gear stage change (M40). The gear stages must be defined by MD35110 $MA_GEAR_STEP_MAX_VELO and MD35120 $MA_GEAR_STEP_MIN_VELO in a way that avoids gaps in the programmable spindle speed range between the gear stages.

Incorrect

```
MD35110 $MA_GEAR_STEP_MAX_VELO [gear stage1] =1000
MD35120 $MA_GEAR_STEP_MIN_VELO [gear stage2]  =1200
```

Correct

```
MD35110 $MA_GEAR_STEP_MAX_VELO [gear stage1] =1000
MD35120 $MA_GEAR_STEP_MIN_VELO [gear stage2]  =  950
```

Related to:

MD35010 $MA_GEAR_STEP_CHANGE_ENABLE
(gear stage change is possible)
MD35120 $MA_GEAR_STEP_MIN_VELO
(min. speed for gear stage change)
MD35140 $MA_GEAR_STEP_MIN_VELO_LIMIT
(min. speed of gear stage)
MD35130 $MA_GEAR_STEP_MAX_VELO_LIMIT
(max. speed of gear stage)

35112	GEAR_STEP_MAX_VELO2			A06, A11, A04	S1
rev/min	2nd data set: Maximum speed for gear stage change			DOUBLE	NEW CONF
CTEQ					
-	6	500., 500., 1000., 2000., 4000., 8000.	0	-	2/2

Description:

The 2nd data set for the max. speeds (upper switching thresholds) of the gear stages for the automatic gear stage change (M40) is defined in GEAR_STEP_MAX_VELO2. The gear stages must be defined in GEAR_STEP_MAX_VELO2 and MD35122 $MA_GEAR_STEP_MIN_VELO2 so that there are no gaps between the gear stages in the programmable spindle speed range.

Examples:

Incorrect:

```
   GEAR_STEP_MAX_VELO2 [gear stage 1] =1000
   GEAR_STEP_MIN_VELO2 [gear stage 2] =1200
```

Correct:

```
   GEAR_STEP_MAX_VELO2 [gear stage 1] =1000
   GEAR_STEP_MIN_VELO2 [gear stage 2] =950
```

The 2nd gear stage data block for tapping with G331/G332 is activated by MD 35010:$MA_GEAR_STEP_CHANGE_ENABLE bit 5 for the master spindle.

Related to:

MD35140 $MA_GEAR_STEP_MIN_VELO_LIMIT (min. speed of gear stage)
MD35130 $MA_GEAR_STEP_MAX_VELO_LIMIT (max. speed of gear stage)

35120	GEAR_STEP_MIN_VELO			A06, A11, A04	S1
rev/min	Minimum speed for gear stage change			DOUBLE	NEW CONF
CTEQ					
-	6	50., 50., 400., 800., 1500., 3000.	-	-	2/2

Description: MD35120 $MA_GEAR_STEP_MIN_VELO defines the minimum speed of the gear stage for the automatic gear stage change (M40).
Refer to MD35120 $MA_GEAR_STEP_MAX_VELO for more information.
Related to:
MD35110 $MA_GEAR_STEP_MAX_VELO
(maximum speed for gear stage change)
MD35010 $MA_GEAR_STEP_CHANGE_ENABLE
(gear stage change is possible)
MD35140 $MA_GEAR_STEP_MIN_VELO_LIMIT
(minimum speed of gear stage)
MD35130 $MA_GEAR_STEP_MAX_VELO_LIMIT
(maximum speed of gear stage)

35122	GEAR_STEP_MIN_VELO2			A06, A11, A04	S1
rev/min	2nd data set: Minimum speed for gear stage change			DOUBLE	NEW CONF
CTEQ					
-	6	50., 50., 400., 800., 1500., 3000.	0	-	2/2

Description: The 2nd data block of the minimum speeds (lower switching thresholds) of the gear stages for automatic gear stage change (M40) is set in GEAR_STEP_MIN_VELO2. The gear stages must be defined with GEAR_STEP_MIN_VELO2 and MD35112 $MA_GEAR_STEP_MAX_VELO2 so that there are no gaps between the gear stages within the programmable spindle speed range.
Examples:
Incorrect:
GEAR_STEP_MAX_VELO2 [gear stage 1] = 1000
GEAR_STEP_MIN_VELO2 [gear stage 2] = 1200
Correct:
GEAR_STEP_MAX_VELO2 [gear stage 1] = 1000
GEAR_STEP_MIN_VELO2 [gear stage 2] = 950
The 2nd gear stage data block for tapping with G331/G332 is activated by MD35010 $MA_GEAR_STEP_CHANGE_ENABLE bit 5 for the master spindle.
Related to:
MD35140 $MA_GEAR_STEP_MIN_VELO_LIMIT (min. speed of the gear stage)
MD35130 $MA_GEAR_STEP_MAX_VELO_LIMIT (max. speed of the gear stage)

35130	GEAR_STEP_MAX_VELO_LIMIT			A06, A11, A04	A2,S1,V1
rev/min	Maximum speed of gear stage			DOUBLE	NEW CONF
CTEQ					
-	6	500., 500., 1000., 2000., 4000., 8000.	1.0e-3	-	2/2

Description: The maximum speed of the gear stage is entered in MD35130 $MA_GEAR_STEP_MAX_VELO_LIMIT with the position control switched off.
This speed can never be exceeded in the active gear stage.
With the position control switched on, the behavior described in MD35135 $MA_GEAR_STEP_PC_MAX_VELO_LIMIT applies.
Note:

- If an S value is programmed that exceeds the max. speed of the active gear stage, the setpoint speed is limited to the max. speed of the gear stage (with gear stage selection - M41 to M45). Furthermore, the NC/PLC interface signal "Programmed speed too high" will be set.
- If an S value is programmed that exceeds the max. speed for gear stage change, a new gear stage will be set (with automatic gear stage selection - M40).
- If an S value is programmed that exceeds the max. speed of the highest gear stage, the speed will be limited to the max. speed of the gear stage (with automatic gear stage selection - M40).
- If an S value is programmed that does not have a suitable gear stage, no gear stage change will be triggered.

Related to:
MD35010 $MA_GEAR_STEP_CHANGE_ENABLE (gear stage change possible)
MD35110 $MA_GEAR_STEP_MAX_VELO (max. speed for gear stage change)
MD35120 $MA_GEAR_STEP_MIN_VELO (min. speed for gear stage change)
MD35135 $MA_GEAR_STEP_PC_MAX_VELO_LIMIT (min. speed of the gear stage with position control)
MD35140 $MA_GEAR_STEP_MIN_VELO_LIMIT (min. speed of the gear stage)

35135	GEAR_STEP_PC_MAX_VELO_LIMIT			A06, A11, A04	S1
rev/min	Maximum speed of the gear stage with position control			DOUBLE	NEW CONF
CTEQ					
-	6	0., 0., 0., 0., 0., 0.	0	-	2/2

Description: The maximum speed of the gear stage is set in GEAR_STEP_PC_MAX_VELO_LIMIT with the position control active.
If value 0 is set (default), 90% of the value from MD35130: GEAR_STEP_MAX_VELO_LIMIT (control margin) will become the max. speed of the gear stage with position control active. This limit speed is limited to a value that does not exceed MD35130 $MA_GEAR_STEP_MAX_VELO_LIMIT and MD35100 $MA_SPIND_VELO_LIMIT.
If an S value is programmed that exceeds the limit speed, the setpoint speed is limited to the limit speed. In this case, the VDI interface signal "Programmed speed too high" will be set.
Related to:
MD35010 $MA_GEAR_STEP_CHANGE_ENABLE (gear stage change possible)
MD35110 $MA_GEAR_STEP_MAX_VELO (max. speed for gear stage change)
MD35120 $MA_GEAR_STEP_MIN_VELO (min. speed for gear stage change)
MD35140 $MA_GEAR_STEP_MIN_VELO_LIMIT (min. speed of the gear stage)

35140	GEAR_STEP_MIN_VELO_LIMIT			A06, A11, A04	S1,V1
rev/min	Minimum speed of gear stage			DOUBLE	NEW CONF
CTEQ					
-	6	5., 5., 10., 20., 40., 80.	-	-	2/2

Description: MD35140 $MA_GEAR_STEP_MIN_VELO_LIMIT defines the minimum speed for the gear stage. The speed cannot drop below this value, even if an S value is programmed that is too low.
The speed can only drop below this minimum value as a result of the "Minimum/maximum speed of gear stage" related signals/commands/states.
MD irrelevant for:
- Spindle oscillation mode
- Spindle positioning mode, axis mode

Related to:
MD35010 $MA_GEAR_STEP_CHANGE_ENABLE
(gear stage change is possible)
MD35110 $MA_GEAR_STEP_MAX_VELO
(maximum speed for gear stage change)
MD35120 $MA_GEAR_STEP_MIN_VELO
(minimum speed for gear stage change)
MD35130 $MA_GEAR_STEP_MAX_VELO_LIMIT
(maximum speed of gear stage)

35150	SPIND_DES_VELO_TOL			A03, A05, A06, A10, A04	R1,S1,Z1
-	Spindle speed tolerance			DOUBLE	Reset
-					
-	-	0.1	0.0	1.0	2/2

Description: In spindle control mode, the set speed (programmed speed x spindle offset, allowing for limits) is compared with the actual speed.
- If the actual speed deviates from the set speed by more than MD35150 $MA_SPIND_DES_VELO_TOL, the NC/PLC interface signal is V390x 2001.5 (Spindle in setpoint range) is set to zero.
- If the actual speed deviates from the set speed by more than MD35150 $MA_SPIND_DES_VELO_TOL, the path feed is disabled (positioning axes continue traversing).
- If the actual speed exceeds the maximum spindle speed (MD35100 $MA_SPIND_VELO_LIMIT) by more than MD35150 $MA_SPIND_DES_VELO_TOL, the NC/PLC interface signal is V390x 2001.0 (Speed limit exceeded) is enabled and alarm 22050 "Maximum speed reached" is output. All axes and spindles on the channel are decelerated.

MD irrelevant to:
- Spindle oscillation mode
- Spindle positioning mode

Example:
MD 35150 $MA_SPIND_DES_VELO_TOL = 0.1
The actual spindle speed must not deviate from the set speed by more than +/- 10%.
Related to:
MD35500 $MA_SPIND_ON_SPEED_AT_IPO_START
(feed enable for spindle in setpoint range)
MD35100 $MA_SPIND_VELO_LIMIT
(maximum spindle speed)

NC/PLC interface signal V390x 2001.5 (Spindle in setpoint range)
NC/PLC interface signal V390x 2001.0 (Speed limit exceeded)
Alarm 22050 "Maximum speed reached"

35160	SPIND_EXTERN_VELO_LIMIT			A06, A04	A3,S1,V1,Z1
rev/min	Spindle speed limitation from PLC			DOUBLE	NEW CONF
CTEQ					
-	-	1000.0	1.0e-3	-	2/2

Description: A limiting value for the maximum spindle speed is entered in MD35160 $MA_SPIND_EXTERN_VELO_LIMIT, which is taken into account exactly when the NC/PLC interface signal V380x 0003.6 (Velocity/speed limitation) is set.

The control limits a spindle speed which is too high to this value.

35200	GEAR_STEP_SPEEDCTRL_ACCEL			A06, A11, A04, -	S1
rev/s²	Acceleration in speed control mode			DOUBLE	NEW CONF
CTEQ					
-	6	30.0, 30.0, 25.0, 20.0, 15.0, 10.0	1.0e-3	-	2/2

Description: If the spindle is in speed control mode, the acceleration is entered in MD35200 $MA_GEAR_STEP_SPEEDCTRL_ACCEL.
The spindle is in speed control mode with the function SPCOF.
Special cases:

The acceleration in speed control mode (MD35200 $MA_GEAR_STEP_SPEEDCTRL_ACCEL) can be set so that the electric current limit is reached.

Related to:
MD35210 $MA_GEAR_STEP_POSCTRL_ACCEL(acceleration in position control mode)
MD35220 $MA_ACCEL_REDUCTION_SPEED_POINT (speed limit for reduced acceleration)

35210	GEAR_STEP_POSCTRL_ACCEL			A06, A11, A04, -	S1
rev/s²	Acceleration in position control mode			DOUBLE	NEW CONF
CTEQ					
-	6	30.0, 30.0, 25.0, 20.0, 15.0, 10.0	1.0e-3	-	2/2

Description: The acceleration in position control mode must be set so that the electric current limit is not reached.
Related to:
MD35200 $MA_GEAR_STEP_SPEEDCTRL_ACCEL
MD35212 $MA_GEAR_STEP_POSCTRL_ACCEL2

35212	GEAR_STEP_POSCTRL_ACCEL2			A06, A11, A04, -	S1
rev/s²	2nd data set: Acceleration in position control mode			DOUBLE	NEW CONF
CTEQ					
-	6	30.0, 30.0, 25.0, 20.0, 15.0, 10.0	1.0e-3	-	2/2

Description: Second gear stage data set for maximum acceleration capability of the gear stages in position control mode.
The acceleration in position control mode must be set so that the electric current limit is not reached.
The 2nd data set for tapping with G331/G332 is activated by MD35010 $MA_GEAR_STEP_CHANGE_ENABLE, bit 5 for the master spindle.

Related to:
MD35210 $MA_GEAR_STEP_POSCTRL_ACCEL
MD35200 $MA_GEAR_STEP_SPEEDCTRL_ACCEL
MD35220 $MA_ACCEL_REDUCTION_SPEED_POINT

35220	ACCEL_REDUCTION_SPEED_POINT			A06, A04	S1,S3,B2
-	Speed for reduced acceleration			DOUBLE	Reset
-					
-	-	1.0	0.0	1.0	0/0

Description: This machine data defines the threshold speed/velocity for spindles/positioning/path axes from which the acceleration reduction is to start. The reference is the defined maximum speed/velocity. The starting point is a percentage of the maximum values.
Example: MD35220 $MA_ACCEL_REDUCTION_SPEED_POINT = 0.7, the maximum speed is 3000 rpm. Acceleration reduction starts at v_on = 2100 rpm, i.e. the maximum acceleration capacity is utilized in the speed range 0...2099.99 rpm. Reduced acceleration is used from 2100 rpm to the maximum speed.
Related to:
MD32000 $MA_MAX_AX_VELO
(maximum axis velocity)
MD35130 $MA_GEAR_STEP_MAX_VELO_LIMIT
(maximum gear stage speed)
MD35230 $MA_ACCEL_REDUCTION_FACTOR
(reduced acceleration)

35230	ACCEL_REDUCTION_FACTOR			A06, A04	S1,S3,B2
-	Reduced acceleration			DOUBLE	Reset
CTEQ					
-	-	0.0	0.0	0.95	0/0

Description: The machine data contains the factor by which the acceleration of the spindle/positioning/path axes is reduced with reference to the maximum speed/velocity. The acceleration is reduced by this factor between the threshold speed/velocity defined in MD35220 $MA_ACCEL_REDUCTION_SPEED_POINT and the maximum speed/velocity.
Example:
a= 10 rev/s², v_on = 2100 rpm, MD35230 $MA_ACCEL_REDUCTION_FACTOR = 0.3.
Acceleration and deceleration take place within the speed range 0...2099.99 rpm with an acceleration of 10 rev/s². From a speed of 2100 rpm up to the maximum speed, the acceleration is reduced from 10 rev/s² to 7 rev/s².
MD irrelevant to:
Errors that lead to rapid stop.
Related to:
MD32300 $MA_MAX_AX_ACCEL (axis acceleration)
MD35200 $MA_GEAR_STEP_SPEEDCTRL_ACCEL
(acceleration in speed control mode)
MD35210 $MA_GEAR_STEP_POSCTRL_ACCEL
(acceleration in position control mode)
MD35242 $MA_ACCEL_REDUCTION_SPEED_POINT
(speed for reduced acceleration)

35300	SPIND_POSCTRL_VELO			A06, A04	P3 pl,P3 sl,R1,S1
rev/min	Position control activation speed			DOUBLE	NEW CONF
CTEQ					
-	6	500.0, 500.0, 500.0, 500.0, 500.0, 500.0	-	-	2/2

Description: When positioning a spindle that is not in position control mode from a high speed, the position control is not activated until the spindle has reached or falls below the velocity defined in MD35300 $MA_SPIND_POSCTRL_VELO.
The speed can be changed with FA[Sn] from the part program. Please refer to the documentation:
/FB1/ Function Manual, Basic Functions; Spindles (S1), section "Spindle mode 'positioning operation" for a description of the spindle behavior under various supplementary conditions (positioning from rotation, positioning from standstill).
Note:
The active speed from MD35300 $MA_SPIND_POSCTRL_VELO cannot exceed the max. speed set in MD35135 $MA_GEAR_STEP_PC_MAX_VELO_LIMIT. If MD35135 $MA_GEAR_STEP_PC_MAX_VELO_LIMIT = 0, the value is limited to 90% of MD35130 $MA_GEAR_STEP_MAX_VELO_LIMIT.
Related to:
MD35350 $MA_SPIND_POSITIONING_DIR (direction of rotation during positioning from standstill, if no synchronization is available)
MD35100 $MA_SPIND_VELO_LIMIT (chuck speed)

35310	SPIND_POSIT_DELAY_TIME			A06, A04	S1
s	Positioning delay time			DOUBLE	NEW CONF
CTEQ					
-	6	0.0, 0.05, 0.1, 0.2, 0.4, 0.8	-	-	2/2

Description: Positioning delay time.
- After reaching the positioning end (exact stop fine), the time delay for the block search is activated at the output of a collected positioning block (SPOS).

35350	SPIND_POSITIONING_DIR			A06	S1
-	Direction of rotation when positioning			BYTE	Reset
CTEQ					
-	-	3	3	4	2/2

Description: When SPOS or SPOSA is programmed, the spindle is switched to position control mode and accelerates with the acceleration defined in MD35210 $MA_GEAR_STEP_POSCTRL_ACCEL (acceleration in position control mode) if the spindle is not synchronized. The direction of rotation is defined by MD35350 $MA_SPIND_POSITIONING_DIR (direction of rotation for positioning from standstill).
MD35350 $MA_SPIND_POSITIONING_DIR = 3 ---> Clockwise direction of rotation
MD35350 $MA_SPIND_POSITIONING_DIR = 4 ---> Counterclockwise direction of rotation
Related to:
MD35300 $MA_SPIND_POSCTRL_VELO (position control activation speed)

35400	SPIND_OSCILL_DES_VELO			A06, A04	P3 pl,P3 sl,S1
rev/min	Oscillation speed			DOUBLE	NEW CONF
CTEQ					
-	-	500.0	-	-	2/2

Description: During oscillation, the NC/PLC interface signal V380x 2002.5 (Oscillation speed) is used to select a motor speed for the spindle motor. This motor speed is defined in MD35400 $MA_SPIND_OSCILL_DES_VELO. The motor speed defined in this MD is independent of the current gear stage. In the AUTOMATIC and MDI displays, the oscillation speed is displayed in the "Spindle set-point" window until the gear is changed.
This motor speed is independent of the current gear stage. In the AUTOMATIC and MDA displays, the oscillation speed is displayed in the "spindle set-point" window until the gear is changed.
MD irrelevant to:
All spindle modes except oscillation mode
Special cases:
The acceleration during oscillation (MD35410 $MA_SPIND_OSCILL_ACCEL) is valid for the oscillation speed defined in this MD.
Related to:
MD35410 $MA_SPIND_OSCILL_ACCEL (acceleration during oscillation)
NC/PLC interface signal V380x 2002.5 (Oscillation speed)
NC/PLC interface signal V380x 2002.4 (Oscillation via PLC)

35410	SPIND_OSCILL_ACCEL			A06, A04, -	S1,Z1
rev/s²	Acceleration during oscillation			DOUBLE	NEW CONF
CTEQ					
-	-	16.0	1.0e-3	-	2/2

Description: The acceleration specified here is only effective for the output of the oscillation speed (MD35400 $MA_SPIND_OSCILL_DES_VELO) to the spindle motor. The oscillation speed is selected using the NC/PLC interface signal V380x 2002.5 (Oscillation speed).
MD irrelevant to:
All spindle modes except oscillation mode
Related to:
MD35400 $MA_SPIND_OSCILL_DES_VELO (oscillation speed)
NC/PLC interface signal V380x 2002.5 (Oscillation speed)
NC/PLC interface signal V380x 2002.4 (Oscillation via PLC)

35430	SPIND_OSCILL_START_DIR			A06	S1
-	Start direction during oscillation			BYTE	Reset
CTEQ					
-	-	0	0	4	2/2

Description: With the NC/PLC interface signal V380x 2002.5 (Oscillation speed), the spindle motor accelerates to the speed specified in MD35400: $MA_SPIND_OSCILL_DES_VELO.
The start direction is defined by MD35430 $MA_SPIND_OSCILL_START_DIR if the NC/PLC interface signal V380x 2002.4 (Oscillation via PLC) is not enabled.
MD35430 $MA_SPIND_OSCILL_START_DIR = 0 ---> Start direction same as the last direction of rotation
MD35430 $MA_SPIND_OSCILL_START_DIR = 1 ---> Start direction counter to the last direction of rotation

MD35430 $MA_SPIND_OSCILL_START_DIR = 2 ---> Start direction counter to the last direction of rotation
MD35430 $MA_SPIND_OSCILL_START_DIR = 3 ---> Start direction is M3
MD35430 $MA_SPIND_OSCILL_START_DIR = 4 ---> Start direction is M4
MD irrelevant to:
All spindle modes except oscillation mode
Related to:
MD35400 $MA_SPIND_OSCILL_DES_VELO (oscillation speed)
NC/PLC interface signal V380x 2002.5 (Oscillation speed)
NC/PLC interface signal V380x 2002.4 (Oscillation via PLC)

35440	SPIND_OSCILL_TIME_CW			A06	S1,Z1
s	Oscillation time for M3 direction			DOUBLE	NEW CONF
CTEQ					
-	-	1.0	-	-	2/2

Description:

The oscillation time defined here is active in the M3 direction.
MD irrelevant to:
- All spindle modes except oscillation mode
- Oscillation via PLC (NC/PLC interface signal V380x 2002.4 (Oscillation via PLC) enabled)

Related to:
MD35450 $MA_SPIND_OSCILL_TIME_CCW (oscillation time for M4 direction)
MD10070 $MN_IPO_SYSCLOCK_TIME_RATIO (interpolator cycle)
NC/PLC interface signal V380x 2002.5 (Oscillation speed)
NC/PLC interface signal V380x 2002.4 (Oscillation via PLC)

35450	SPIND_OSCILL_TIME_CCW			A06	S1,Z1
s	Oscillation time for M4 direction			DOUBLE	NEW CONF
CTEQ					
-	-	0.5	-	-	2/2

Description:

The oscillation time defined here is active in the M4 direction.
MD irrelevant to:
- All spindle modes except oscillation mode
- Oscillation via PLC (NC/PLC interface signal V380x 2002.4 (Oscillation via PLC) enabled)

Related to:
MD35440 $MA_SPIND_OSCILL_TIME_CW (oscillation time for M3 direction)
MD10070 $MN_IPO_SYSCLOCK_TIME_RATIO (interpolator cycle)
NC/PLC interface signal V380x 2002.5 (Oscillation speed)
NC/PLC interface signal V380x 2002.4 (Oscillation via PLC)

35500	SPIND_ON_SPEED_AT_IPO_START			A03, A06, A10	S1,Z1
-	Feedrate enable for spindle in the set range			BYTE	Reset
CTEQ					
-	-	1	0	2	2/2

Description:

Byte = 0:
The path interpolation is not affected
Byte = 1:
The path interpolation is not enabled (positioning axes continue traversing) until the spindle has reached the specified speed. The tolerance range can be set in MD 35150: $MA_SPIND_DES_VELO_TOL. If a measuring system is active, then the actual speed is monitored, otherwise the set speed. Path axes traversing in continuous-path mode (G64) are not stopped.

Byte = 2:
In addition to 1, traversing path axes are also stopped before machining begins, e.g. continuous-path mode (G64) and the change from rapid traverse (G0) to a machining block (G1, G2,..). The path is stopped at the last G0 block, and does not start traversing until the spindle is within the set speed range.
Restriction:
If the spindle is newly programmed by the PLC (FC18) or a synchronized action "shortly" before the end of the last G0 block, then the path decelerates taking the dynamic limitations into account. Because the spindle programming is asynchronous, a traverse can be made into the machining block if necessary. If the spindle has reached the setpoint speed range, then machining starts from this position.++

35510	SPIND_STOPPED_AT_IPO_START			A03, A06, A10	S1
-	Feedrate enable for spindle stopped			BOOLEAN	Reset
CTEQ					
-	-	FALSE	-	-	2/2

Description: When a spindle is stopped (M5), the path feed is disabled (positioning axes continue traversing) if MD35510 $MA_SPIND_STOPPED_AT_IPO_START is enabled and the spindle is in control mode.
When the spindle has come to a standstill (NC/PLC interface signal V390x 0001.4 (Axis/spindle stationary) enabled), the path feed is enabled.
Related to:
MD35500 $MA_SPIND_ON_SPEED_AT_IPO_START (feed enable for spindle in setpoint range)

35550	DRILL_VELO_LIMIT			A06, A11, A04	-
rev/min	Maximum speeds for tapping			DOUBLE	NEW CONF
CTEQ					
-	6	10000., 10000., 10000., 10000., 10000., 10000.	1	-	2/2

Description: Limit speed values for tapping without compensating chuck with G331/G332.
The maximum speed of the linear motor characteristic range (constant acceleration capacity) must be specified depending on the gear stage.

2.4.6 Monitoring functions

36000	STOP_LIMIT_COARSE			A05	TE1,A3,B1,G2,S1, Z1
mm, degrees	Exact stop coarse			DOUBLE	NEW CONF
-					
-	-	0.04,0.04,0.04,0.04,0.04,0.04,0.04,0.04...	-	-	2/2

Description: Threshold for exact stop coarse

An NC block is considered as terminated if the actual position of the path axes is away from the setpoint position by the value entered for the exact stop limit. If the actual position of a path axis is not within this limit, the NC block is considered as not terminated, and further part program execution is not possible. The magnitude of the value entered influences the transition to the next block. The larger the value, the earlier the block change is initiated.

If the specified exact stop limit is not reached, then

- the block is considered as not terminated,
- further traversing of the axis is not possible,
- alarm 25080 Positioning monitoring is output after expiry of the time specified in MD36020 $MA_POSITIONING_TIME (monitoring time for exact stop fine),
- the direction of movement +/- is indicated for the axis in the positioning display. The exact stop window is also evaluated for spindles in position control mode (SPCON instruction).

Special cases:

MD36000 $MA_STOP_LIMIT_COARSE must not be set smaller than MD36010 $MA_STOP_LIMIT_FINE (exact stop fine). To achieve the identical block change behavior as with the "exact stop fine" criterion, the exact stop coarse window may be identical to the exact stop fine window. MD36000 $MA_STOP_LIMIT_COARSE must not be set equal to or greater than MD36030 $MA_STANDSTILL_POS_TOL (standstill tolerance).

Related to:

MD36020 $MA_POSITIONING_TIME (delay time, exact stop fine)

36010	STOP_LIMIT_FINE			A05	TE1,A3,B1,D1,G2 ,S1,Z1
mm, degrees	Exact stop fine			DOUBLE	NEW CONF
-					
-	-	0.01,0.01,0.01,0.01,0.01,0.01,0.01,0.01...	-	-	2/2

Description: Threshold for exact stop fine

See also MD36000 $MA_STOP_LIMIT_COARSE (exact stop coarse)

Special cases:

MD36010 $MA_STOP_LIMIT_FINE must not be set greater than MD36000 $MA_STOP_LIMIT_COARSE (exact stop coarse).

MD36010 $MA_STOP_LIMIT_FINE must not be set greater than or equal to MD36030 $MA_STANDSTILL_POS_TOL (standstill tolerance).

Related to:

MD 36020: $MA_POSITIONING_TIME (delay time, exact stop fine)

36012	STOP_LIMIT_FACTOR			A05	G1,A3,B1,G2,S1, Z1
-	Factor for exact stop coarse/fine and standstill			DOUBLE	NEW CONF
-					
-	6	1.0, 1.0, 1.0, 1.0, 1.0, 1.0	0.001	1000.0	1/1

Description: With this factor,

MD36000 $MA_STOP_LIMIT_COARSE,

MD36010 $MA_STOP_LIMIT_FINE,

MD36030 $MA_STANDSTILL_POS_TOL

can be re-assessed as a function of the parameter set. The relationship between these three values always remains the same.

Application examples:

Adapting the positioning behavior if the mass relationships change significantly with a gear change, or if it is desired to save on machine positioning time at the cost of accuracy in various operating conditions.

Related to:

MD36000 $MA_STOP_LIMIT_COARSE,

MD36010 $MA_STOP_LIMIT_FINE,

MD36030 $MA_STANDSTILL_POS_TOL

36020	POSITIONING_TIME			A05	TE1,A3,B1,G2
s	Delay time exact stop fine			DOUBLE	NEW CONF
-					
-	-	1.0	-	-	2/2

Description: The following error must have reached the limit value for exact stop fine by the expiry of the time entered in this MD for traveling into the position (position setpoint has reached the destination).

The current following error is therefore continuously monitored for the time limit MD36010 $MA_STOP_LIMIT_FINE. If this time is exceeded, alarm 25080 "Positioning monitoring" is output, and the axis stopped. The time entered in this MD should be long enough to ensure that the monitoring function is not triggered under normal operating conditions, taking into account any settling times.

Related to:

MD 36010: $MA_STOP_LIMIT_FINE (exact stop fine)

36030	STANDSTILL_POS_TOL			A05	G1,A3,D1,G2
mm, degrees	Standstill tolerance			DOUBLE	NEW CONF
-					
-	-	0.2,0.2,0.2,0.2,0.2,0.2, 0.2,0.2,0.2...	-	-	2/2

Description: This MD serves as a tolerance band for the following monitoring functions:

- After termination of a traversing block (position partial setpoint=0 at the end of the movement), whether the following error has reached the limit value for MD36030 $MA_STANDSTILL_POS_TOL (standstill tolerance) is monitored after the programmable MD36040 $MA_STANDSTILL_DELAY_TIME (delay time, standstill monitoring).

- After termination of a positioning action (exact stop fine reached), positioning monitoring is replaced by standstill monitoring. The axis is monitored for moving from its position by more than defined in MD36030 $MA_STANDSTILL_POS_TOL (standstill tolerance).

If the setpoint position is over- or undershot by the standstill tolerance, alarm 25040 "Standstill monitoring" is output and the axis stopped.

Special cases:

The standstill tolerance must be greater than the "exact stop limit coarse".

Related to:

MD36040 $MA_STANDSTILL_DELAY_TIME (delay time, standstill monitoring)

36040	STANDSTILL_DELAY_TIME			A05	TE1,A3,F1,G2
s	Delay time for standstill monitoring			DOUBLE	NEW CONF
-					
-	-	0.4	-	-	2/2

Description: See MD36030 $MA_STANDSTILL_POS_TOL (standstill tolerance)

36042	FOC_STANDSTILL_DELAY_TIME			A05	F1
s	Delay time for standstill monit. w/ active torque or force lim.			DOUBLE	NEW CONF
-					
-	-	0.4	-	-	0/0

Description: Only for SIMODRIVE611D or PROFIdrive telegrams including a torque/force limiting value:

Waiting time between the end of a movement and activation of standstill monitoring with active torque/force limitation.

If the configurable end of block criterion occurs within this time, then standstill monitoring is activated.

36050	CLAMP_POS_TOL			A05	A3,D1,Z1
mm, degrees	Clamping tolerance			DOUBLE	NEW CONF
-					
-	-	0.5	-	-	2/2

Description: With NC/PLC interface signal V380x 0002.3 (Blocking action active), blocking monitoring is activated. If the monitored axis is forced away from the setpoint position (exact stop limit) by more than the blocking tolerance, alarm 26000 "Blocking monitoring" is output and the axis stopped.

Threshold value for clamping tolerance (half width of window).

Special cases:

The clamping tolerance must be greater than the "exact stop limit coarse".

Related to:

NC/PLC interface signal V380x 0002.3 (Blocking action active)

36052	STOP_ON_CLAMPING			A10	A3
-	Special functions with clamped axis			BYTE	NEW CONF
CTEQ					
-	-	0	0	0x07	0/0

Description: This MD defines how a blocked axis is taken into account.

Bit 0 =0:

If a blocked axis is to be traversed again in continuous-path mode, it must be ensured via the part program that the path axes are stopped and that there is time for releasing the blockage.

Bit 0 =1:

If a blocked axis is to be traversed again in continuous-path mode, the LookAhead function stops the path motion if required until the position controller is allowed to traverse the blocked axis again, i.e. until the controller enable is set again.

Bit 1 is relevant only if bit 0 is set:

Bit 1 =0:

If a blocked axis is to be traversed again in continuous-path mode, the LookAhead function does not release the blockage.

Bit 1 =1:

If a blocked axis is to be traversed again in continuous-path mode, a traversing command for the blocked axis is given in the preceding G0 blocks so that the PLC releases the axis blockage again.

Bit 2 =0:

If an axis is to be blocked in continuous-path mode, it must be ensured in the part program that the path axes are stopped to make sure that there is time for setting the blockage.

Bit 2 =1:

If an axis is to be blocked in continuous-path mode, the LookAhead function stops the path motion prior to the next non-G0 block, if the axis has not yet been blocked by that time, i.e. the PLC has not yet set the feedrate override to zero.

36060	STANDSTILL_VELO_TOL			A05, A04	TE1,A2,A3,D1,Z1
mm/min, rev/min	Threshold velocity/speed 'Axis/spindle in stop'			DOUBLE	NEW CONF
-					
-	-	5.00,5.00,5.00,5.00,5.00,5.00,5.00...	-	-	2/2

Description: This MD defines the standstill range for the axis velocity / spindle speed. If the current actual velocity of the axis or the actual speed of the spindle is less than the value entered in this MD, the NC/PLC interface signal V390x 0001.4 (Axis/spindle stationary) is set.

To bring the axis/spindle to a standstill under control, the pulse enable should not be removed until the axis/spindle is at a standstill. Otherwise the axis will coast down.

Related to:

NC/PLC interface signal V390x 0001.4 (Axis/spindle stationary)

36100	POS_LIMIT_MINUS			A03, A05, A11, -	TE1,R2,T1,A3,Z1
mm, degrees	1st software limit switch minus			DOUBLE	NEW CONF
CTEQ					
-	-	-1.0e8	-	-	2/2

Description: Same meaning as 1st software limit switch plus, however the traversing range limitation is in the negative direction.

The MD becomes active after reference point approach if the NC/PLC interface signal V380x 1000.2 (2nd software limit switch minus) is not set.

MD irrelevant:

if axis is not referenced.

Related to:

NC/PLC interface signal V380x 1000.2 (2nd software limit switch minus)

36110	POS_LIMIT_PLUS			A03, A05, A11, -	TE1,R2,T1,G2,A3, Z1
mm, degrees	1st software limit switch plus			DOUBLE	NEW CONF
CTEQ					
-	-	1.0e8	-	-	2/2

Description: A software limit switch can be activated in addition to the hardware limit switch. The absolute position in the machine axis system of the positive range limit of each axis is entered.
The MD is active after reference point approach if NC/PLC interface signal V380x 1000.3 (2nd software limit switch plus) has not been set.
MD irrelevant:
if axis is not referenced.
Related to:
NC/PLC interface signal V380x 1000.3 (2nd software limit switch plus)

36120	POS_LIMIT_MINUS2			A03, A05, -	TE1,A3,Z1
mm, degrees	2nd software limit switch minus			DOUBLE	NEW CONF
CTEQ					
-	-	-1.0e8	-	-	2/2

Description: Same meaning as 2nd software limit switch plus, but the traversing range limitation is in the negative direction.
The PLC can select whether software limit switch 1 or 2 is to be active by means of the interface signal.
For example:
V380x 1000.2 = 0 (1st software limit switch minus) active for 1st axis
V380x 1000.2 = 1 (2nd software limit switch minus) active for 1st axis
MD irrelevant:
if axis is not referenced.
Related to:
NC/PLC interface signal V380x 1000.2 (2nd software limit switch minus)

36130	POS_LIMIT_PLUS2			A03, A05, -	TE1,A3,Z1
mm, degrees	2nd software limit switch plus			DOUBLE	NEW CONF
CTEQ					
-	-	1.0e8	-	-	2/2

Description: This machine data can define a 2nd software limit switch position in the positive direction in the machine axis system. The PLC can select which of the two software limit switches 1 or 2 is to be active by means of an interface signal.
For example:
V380x 1000.3 = 0 (1st software limit switch plus) active for 1st axis
V380x 1000.3 = 1 (2nd software limit switch plus) active for 1st axis
MD irrelevant:
if axis is not referenced.
Related to:
NC/PLC interface signal V380x 1000.3 (2nd software limit switch plus)

36200	AX_VELO_LIMIT			A05, A11, A04	TE3,A3,G2,S1,V1
mm/min, rev/min	Threshold value for velocity monitoring			DOUBLE	NEW CONF
CTEQ					
-	6	11500., 11500., 11500., 11500., 11500., 11500....	-	-	2/2

Description: The threshold value for actual velocity monitoring is entered in this machine data.
If the axis has at least one active encoder and if this encoder is below its limit frequency, alarm 25030 "Actual velocity alarm limit" is triggered when the treshold value is exceeded, and the axis is stopped.
Settings:

- For axes, a value should be selected that is 10 to 15 % higher than that in MD32000 $MA_MAX_AX_VELO (maximum axis velocity). With active temperature compensation MD32750 $MA_TEMP_COMP_TYPE, the maximum axis velocity is increased by an additional factor which is determined by MD32760 $MA_COMP_ADD_VELO_FACTOR (velocity overshoot through compensation). The following should therefore apply to the velocity monitoring threshold value:

  MD36200 $MA_AX_VELO_LIMIT[n] > MD32000 $MA_MAX_AX_VELO * (1.1 ... 1.15 + MD32760 $MA_COMP_ADD_VELO_FACTOR)

- For spindles, a value should be selected for each gear stage that is 10 to 15 % higher than the corresponding values in MD35130 $MA_GEAR_STEP_MAX_VELO_LIMIT[n] (maximum speed of gear stage).

The index of the machine data has the following coding: [control parameter set no.]: 0-5

36210	CTRLOUT_LIMIT			EXP, A05	A3,D1,G2
%	Maximum speed setpoint			DOUBLE	NEW CONF
CTEQ					
-	1	110.0	0	200	7/2

Description: This MD defines the maximum speed setpoint in percent. The value refers to the speed (100%) at which the axis velocity of MD32000 $MA_MAX_AX_VELO is reached. A value larger than 100% contains the required control reserve for digital drives. If settings beyond the limit are made, the MD value is used as the limiter, an alarm i given and the axes brought to a halt.
With an analog spindle the maximum speed that can be output is limited by the maximum setpoint output voltage of 10V. The value in this MD should not be greater than the speed value that is reached at this voltage (100%).
Index [n] of the machine date has the following coding: [setpoint branch]: 0

36220	CTRLOUT_LIMIT_TIME			EXP, A05	A3
s	Delay time for speed setpoint monitoring			DOUBLE	NEW CONF
-					
-	1	0.0	-	-	1/1

Description: This MD defines how long the speed setpoint may be within the limit CTRLOUT_LIMIT[n] (max. speed setpoint) until the monitoring function is triggered.
Monitoring (and with it also this machine data) is always active.
Reaching the limit renders the position control loop non-linear, which results in contour errors provided that the speed setpoint limited axis is participating in contour generation. That is why this MD has default value 0, i.e. the monitoring function responds as soon as the speed setpoint reaches the limit.

36300	ENC_FREQ_LIMIT			EXP, A02, A05, A06	A3,D1,R1,Z1
-	Encoder limit frequency			DOUBLE	PowerOn
-					
-	1	3.0e5, 3.0e5	-	-	2/2

Description: This MD is used to enter the encoder frequency, which,
in general, is a manufacturer specification (type plate, documentation).
For PROFIdrive:
No automatic, software-internal limitation for encoders on the PROFIdrive drive; here, the limit values of the measuring circuit module depend on the drive hardware used, i.e. known only by the drive. Therefore, it is the user who is responsible for taking into account the limit frequency of the measuring circuit module.

36302	ENC_FREQ_LIMIT_LOW			EXP, A02, A05, A06	A3,R1,S1,Z1
%	Encoder limit frequency for new encoder synchronization.			DOUBLE	NEW CONF
-					
-	1	99.9, 99.9	0	100	2/2

Description: Encoder frequency monitoring uses a hysteresis.
MD36300 $MA_ENC_FREQ_LIMIT defines the encoder limit frequency. The encoder is switched off when this frequency is exceeded. The encoder is switched on again when the frequency falls below that defined in MD36302 $MA_ENC_FREQ_LIMIT_LOW.
MD36300 $MA_ENC_FREQ_LIMITis entered directly in Hertz,
whereas MD36302 $MA_ENC_FREQ_LIMIT_LOW is a fraction, expressed as a percentage, of MD36300 $MA_ENC_FREQ_LIMIT.
MD36302 $MA_ENC_FREQ_LIMIT_LOW is therefore already correctly preset for most of the encoders used.
Exception: In the case of absolute encoders with an En-Dat interface, the limit frequency of the absolute track is significantly lower than the limit frequency of the incremental track. A low value in MD36302 $MA_ENC_FREQ_LIMIT_LOW ensures that the encoder is not switched on again until it falls below the limit frequency of the absolute track, and therefore is not referenced until permitted by the absolute track. For spindles, this referencing is carried out automatically.

Example EnDat encoder EQN 1325:
Limit frequency of the electronics of the incremental track: 430 kHz
===> MD36300 $MA_ENC_FREQ_LIMIT = 430 kHz
The limit frequency of the absolute track is approx. 2000 encoder rpm at 2048 increments/encoder revolution, i.e. the limit frequency is 2000/60 * 2048 Hz = 68 kHz
===> MD36302 $MA_ENC_FREQ_LIMIT_LOW = 68/430 = 15%

36310	ENC_ZERO_MONITORING			EXP, A02, A05	A3,R1
-	Zero mark monitoring			DWORD	NEW CONF
-					
-	1	0, 0	-	-	2/2

Description: This MD is used to activate zero mark monitoring.
For PROFIdrive drives (the corresponding diagnostics system variables are not currently supplied for incremental measuring systems):
For PROFIdrive, the permissible deviation must be set in the drive, *not* in the NC. Zero mark monitoring reported by the drive is mapped to the NCK according to the following rule:
0: no zero mark monitoring
100: no zero mark monitoring together with suppression of all encoder monitoring operations, i.e. not only alarm 25020 but also alarms 25000, 25010 etc. are suppressed).
>0 but less than 100: direct triggering of power ON alarm 25000 (or 25001).
>100: attenuated error message: reset alarm 25010 (25011) is output instead of power ON alarm 25000 (25001).
For absolute measuring systems ($MA_ENC_TYPE=4):
Permissible deviation in 1/2 coarse increments between the absolute and the incremental encoder track (one 1/2 coarse increment is sufficient).
If a SIMODRIVE611U drive type is used, monitoring only takes place at a standstill.

36312	ENC_ABS_ZEROMON_WARNING			EXP, A02, A05	A3
-	Zero mark monitoring warning level			DWORD	NEW CONF
-					
-	1	10, 10	-	-	0/0

Description: Only for absolute measuring systems ($MA_ENC_TYPE=4):
This MD activates zero mark diagnostics.
0: no zero mark diagnostics
>0: permissible deviation in 1/2 coarse increments between the absolute and the incremental encoder track (one 1/2 coarse increment is sufficient).

36314	ENC_ABS_ZEROMON_INITIAL			EXP, A02, A05	A3
-	Warning level for absolute encoder power ON			DWORD	NEW CONF
-					
-	1	1000, 1000	-	-	0/0

Description: Only for absolute measuring systems ($MA_ENC_TYPE=4):
Parameterization in 1/2 coarse increments
At absolute encoder power ON (deselect parking and similar) this MD parameterizes the previously permissible position offset (comparison of the new absolute position with the information last saved in SRAM). When the warning level is exceeded, system variable $VA_ENC_ZERO_MON_ERR_CNT is incremented in coarse increments by the value 10000.

36400	CONTOUR_TOL			A05, A11	A3,D1,G2
mm, degrees	Tolerance band for contour monitoring			DOUBLE	NEW CONF
-					
-	-	1.0,1.0,1.0,1.0,1.0,1.0, 1.0,1.0,1.0...	-	-	2/2

Description: Tolerance band for axial contour monitoring (dynamic following error monitoring).
The permissible deviation between the real and the modelled following error is entered in this MD.
The input of the tolerance band is intended to avoid spurious tripping of the dynamic following error monitoring caused by minor speed fluctuations, which occur during normal closed-loop control operations (e.g. during first cut).
Following error modelling and thus the input of this MD depend on the position control gain MD32200 $MA_POSCTRL_GAIN and, in the case of precontrol or simulation, on the accuracy of the controlled system model MD32810 $MA_EQUIV_SPEEDCTRL_TIME (equivalent time constant for precontrol of speed control loop), as well as on the accelerations and velocities used.

36500	ENC_CHANGE_TOL			A02, A05	G1,K6,K3,A3,D1, G2,Z1
mm, degrees	Tolerance at actual position value change.			DOUBLE	NEW CONF
-					
-	-	0.1	-	-	2/2

Description: The permissible deviation between the actual values of the two measuring systems is entered in this MD.
This difference must not be exceeded when switching over the measuring system used for closed-loop control, in order to avoid compensating processes that are too strong. Otherwise, the error message 25100 "Axis %1 Switchover of measuring system not possible" is generated and the switchover does not take place.
MD irrelevant for:
MD30200 $MA_NUM_ENCS = 0 or 1.

36510	ENC_DIFF_TOL			A02, A05	A3,G2
mm, degrees	Tolerance of measuring system synchronization			DOUBLE	NEW CONF
-					
-	-	0.0	-	-	0/0

Description: Permissible deviation between the actual values of the two measuring systems.
This difference must not be exceeded during the cyclic comparison of the two measuring systems used, as otherwise error message 25105 (measuring systems deviate) would be generated.
The corresponding monitoring function is not active

- with MD input value=0,
- if less than 2 measuring systems are active/available in the axis
- or if the axis has not been referenced (at least act. closed-loop control meas. system).

With modulo axes, it is always the absolute value of the shortest/direct position difference that is monitored.

36520	DES_VELO_LIMIT			A02, A05	-
%	Threshold for setpoint velocity monitoring			DOUBLE	NEW CONF
-					
-	-	125.0	-	-	1/1

Description: Maximum permissible setpoint velocity as a percentage of the maximum axis velocity/spindle speed.
With MD36520 $MA_DES_VELO_LIMIT, the position setpoint is monitored for abrupt changes. If the permissible limit value is exceeded, alarm 1016 error code 550010 is output.
With axes, this machine data refers to MD32000 $MA_MAX_AX_VELO.
With spindles, this MD refers to the lower of the speeds set in MD35130 $MA_GEAR_STEP_MAX_VELO_LIMIT of the current gear stage and MD35100 $MA_SPIND_VELO_LIMIT.

36600	BRAKE_MODE_CHOICE			EXP, A05	A3,Z1
-	Deceleration response on hardware limit switch			BYTE	PowerOn
CTEQ					
-	-	0	0	1	2/2

Description: If a rising edge of the axis-specific hardware limit switch is detected while the axis is traversing, the axis is braked immediately.
The type of braking is determined by this machine data:
Value = 0:
Controlled braking along the acceleration ramp defined by MD32300 $MA_MAX_AX_ACCEL (axis acceleration).
Value = 1:
Rapid braking (selection of setpoint = 0) with reduction of following error.
Related to:
NC/PLC interface signal V380x 1000.1 und .0 (Hardware limit switch plus or minus)

36610	AX_EMERGENCY_STOP_TIME			A05, -	TE3,K3,A2,A3,N2,Z1
s	Maximum time for braking ramp in case of error.			DOUBLE	NEW CONF
-					
-	-	0.05	0.0	1.0e15	2/2

Description: This MD defines the braking ramp time that an axis or spindle requires to brake from maximum velocity/speed to a standstill in the event of errors (e.g. emergency stop). At the same lead/brake acceleration, standstill is reached correspondingly earlier from lower velocities/speeds.
Mechanically robust axes are normally stopped abruptly with speed setpoint 0; values in the lower ms range are appropriate in these cases (default setting).
However, high moving masses or limited mechanical conditions (e.g. gear load capacity) often have to be taken into account for spindles. This means that the MD has to be changed to set a longer braking ramp.
Notice:
- With interpolating axes or axis/spindle couplings, it cannot be ensured that the contour or coupling will be maintained during the braking phase.

- If the time set for the braking ramp for error states is too long, the controller enable will be removed although the axis/spindle is still moving. Depending on the drive type used and the activation of the pulse enable, either an immediate stop with speed setpoint 0 will be initiated or the axis/spindle will coast down without power. The time selected in MD36610 $MA_AX_EMERGENCY_STOP_TIME should therefore be shorter than the time in MD36620 $MA_SERVO_DISABLE_DELAY_TIME (cutout delay, controller enable) so that the configured braking ramp can be fully active throughout the entire braking operation.
- The braking ramp may be ineffective or not maintained if the active drive follows its own braking ramp logic (e.g. SINAMICS).

Related to:

MD36620 $MA_SERVO_DISABLE_DELAY_TIME (cutout delay controller enable)
MD36210 $MA_CTRLOUT_LIMIT (maximum speed setpoint)

36620	SERVO_DISABLE_DELAY_TIME			A05, -	TE3,K3,A2,A3,N2, Z1
s	Cutout delay servo enable			DOUBLE	NEW CONF
-					
-	-	0.1	0.0	1.0e15	2/2

Description: Maximum time delay for removal of "controller enable" after faults. The speed enable (controller enable) of the drive is removed internally within the controller after the set delay time, at the latest.

The delay time entered becomes active as a result of the following events:

- Errors that lead to immediate stopping of the axes
- Removal of the interface signal by the PLC V380x 0002.1 (Controller enable)

As soon as the actual speed reaches the standstill range (MD36060 $MA_STANDSTILL_VELO_TOL), the "controller enable" for the drive is removed. The time set should be long enough to enable the axis / spindle to brake down to a standstill from maximum traversing velocity or maximum speed. If the axis / spindle is stationary, the "controller enable" for the drive is removed immediately (i.e. the time defined in MD36620 $MA_SERVO_DISABLE_DELAY_TIME is terminated prematurely).

Application example(s):

Speed control of the drive should be retained long enough to enable the axis / spindle to brake down to standstill from maximum traversing velocity or maximum speed.

Notice:

If the cutout delay controller enable is set too short, controller enable will be removed although the axis/spindle is still moving. This axis/spindle then coasts down without power (which may be appropriate for grinding wheels, for example); otherwise the time set in MD36620 $MA_SERVO_DISABLE_DELAY_TIME should be longer than the duration of the braking ramp for error states (MD36610 $MA_AX_EMERGENCY_STOP_TIME).

Related to:

NC/PLC interface signal V380x 0002.1 (Controller enable)
MD36610 $MA_AX_EMERGENCY_STOP_TIME

36690	AXIS_DIAGNOSIS			EXP, A08	-
-	Internal data for test purposes			DWORD	PowerOn
NBUP					
-	-	0	-	-	0/0

Description: Internal data for test purposes

0: :Basic setting

Bit 0 (LSB) = 1 :For test case task.exp (for alarm SCAL_WARN_VEL)

Bit 1 = 1 :For test case brake test

- ACT_POS_ABS for ENC-SIM on HOST
- Additional error information in $VA_FXS_INFO

Bit 2 = 1 :For travel to fixed stop - preliminary

- Allow rapid braking for linked axes

Bit 3 = 1 :For travel to fixed stop - preliminary

- Consider inversion of direction when switching off rapid braking for linked axes

36700	DRIFT_ENABLE			EXP, A07, A09	G2
-	Automatic drift compensation			BOOLEAN	NEW CONF
-					
-	-	FALSE	-	-	1/1

Description: Only for special analog and hydraulic drives (not active with digital SIMODRIVE611D or PROFIdrive drives):

The automatic drift compensation is activated by MD36700 $MA_DRIFT_ENABLE.

1: Automatic drift compensation active (only for position-controlled axes/ spindles).

With automatic drift compensation, while the axis is at a standstill, the control continually calculates the additional drift value still required to ensure that the following error reaches the value 0 (compensation criterion). The total drift value is therefore formed from the drift basic value (MD36720 $MA_DRIFT_VALUE) and the drift additional value.

0: Automatic drift compensation not active.

The drift value is formed only from the drift basic value (MD36720 $MA_DRIFT_VALUE).

MD irrelevant to:

Non-position-controlled spindles

Related to:

MD36710 $MA_DRIFT_LIMIT drift limit value for automatic drift compensation

MD36720 $MA_DRIFT_VALUE drift basic value

36710	DRIFT_LIMIT			EXP, A07, A09	-
%	Drift limit value for automatic drift compensation			DOUBLE	NEW CONF
-					
-	1	0.0	0	1.e9	3/3

Description: Only for special analog and hydraulic drives (not active with digital SIMODRIVE611D or PROFIdrive drives):
The magnitude of the drift additional value calculated during automatic drift compensation can be limited by MD36710 $MA_DRIFT_LIMIT.
If the drift additional value exceeds the limit value entered in MD36710 $MA_DRIFT_LIMIT, alarm 25070 "Drift value too large" is output, and the drift additional value is limited to this value.
MD irrelevant to:

MD36700 $MA_DRIFT_ENABLE = 0

36720	DRIFT_VALUE			EXP, A07, A09	-
%	Basic drift value			DOUBLE	NEW CONF
-					
-	1	0.0	-1e15	1e15	2/2

Description: Only for special analog and hydraulic drives (not with digital SIMODRIVE611D drives - digital drives do not have a drift):
The value entered in MD36720 $MA_DRIFT_VALUE is always added as an offset to the manipulated variable. Whereas automatic drift compensation is active only for position-controlled axes, this machine data is always active.
Special case: the following applies to PROFIdrive drives:
This MD can also be used for "simple" drives that have drift problems due to drive-internal implementation as analog drives. To avoid erroneous settings, this static drift compensation only becomes active with PROFIdrive, if $MA_RATED_OUTVAL != 0 (i.e. the MD has no effect in the case of automatic interface adjustment between the NC and the drive).
Note:

Drift compensation must not be active if the DSC function (MD32640 $MA_STIFFNESS_CONTROL_ENABLE=1) is used, as otherwise unexpected speed oscillations will occur when DSC is enabled/disabled.

Standardization: the input value is related to the corresponding interface standardization in
MD32250 $MA_RATED_OUTVAL,
MD32260 $MA_RATED_VELO and
MD36210 $MA_CTRLOUT_LIMIT.

36730	DRIVE_SIGNAL_TRACKING			A10	B3
-	Acquisition of additional drive actual values			BYTE	PowerOn
-					
-	-	0	0	4	0/0

Description: MD36730 $MA_DRIVE_SIGNAL_TRACKING = 1 activates the acquisition of the following drive actual values:
For SIMODRIVE611D or PROFIdrive:
- $AA_LOAD Drive load
- $AA_POWER Drive active power
- $AA_TORQUE Drive torque setpoint
- $AA_CURR Smoothed current setpoint (q-axis current) of drive

MD36730 $MA_DRIVE_SIGNAL_TRACKING = 2 activates the acquisition of the following drive actual values:
With PROFIdrive, it must be ensured that the stated values are also transmitted in the drive actual message frame (provide sufficient message frame length on the bus, assign the values to the message frame contents in the drive, e.g. use message frame 116).
- $VA_DP_ACT_TEL shows actual value message frame words

36750	AA_OFF_MODE			A10	2.4,5.3,6.2
-	Effect of value assignment for axial override of synchr. action.			BYTE	PowerOn
CTEQ					
-	-	0	0	7	0/0

Description: Mode setting for axial offset $AA_OFF
Bit 0: Effect of value assignment within a synchronized action
0: Absolute value
1: Incremental value (integrator)
Bit 1: Response of $AA_OFF on RESET
0: $AA_OFF is deselected on RESET
1: $AA_OFF is retained beyond RESET
Bit 2: $AA_OFF in JOG mode
0: No superimposed motion due to $AA_OFF
1: A superimposed motion due to $AA_OFF is interpolated

2.4.7 Travel to fixed stop

37000	FIXED_STOP_MODE			A10, -	-
-	Travel to fixed stop mode			BYTE	PowerOn
CTEQ					
802d-cu3	-	0	0	3	2/2
802d-ng2	-	0	0	3	2/2
802d-ng3	-	0	0	3	2/2
802d-tm1	-	0	0	3	0/0
802d-tm2	-	0	0	3	2/2
802d-tm3	-	0	0	3	2/2

Description: This machine data defines how the function "Travel to fixed stop" can be started.
0: Travel to fixed stop not available.
1: Travel to fixed stop can be started only from the NC program with the command FXS[x]=1.

37002	FIXED_STOP_CONTROL			A10	F1
-	Sequence control for travel to fixed stop			BYTE	PowerOn
-					
802d-cu3	-	0	0	3	2/2
802d-ng2	-	0	0	3	2/2
802d-ng3	-	0	0	3	2/2
802d-tm1	-	0	0	3	0/0
802d-tm2	-	0	0	3	2/2
802d-tm3	-	0	0	3	2/2

Description: Sequence control for travel to fixed stop.
Bit 0: behavior on pulse disable at fixed stop
= 0: travel to fixed stop is canceled
= 1: travel to fixed stop is interrupted, i.e. the drive is without power. As soon as the pulse disable is canceled again, the drive continues with the limited torque.
Control of the torque injection see bit 1.
Bit 1: behavior after pulse disable at the fixed stop
= 0: the torque is applied in steps.
= 1: the torque is applied in ramps (see MD37012 $MA_FIXED_STOP_TORQUE_RAMP_TIME)

37010	FIXED_STOP_TORQUE_DEF			A10	-
%	Default fixed stop clamping torque			DOUBLE	PowerOn
CTEQ					
802d-cu3	-	5.0	0.0	100.0	2/2
802d-ng2	-	5.0	0.0	100.0	2/2
802d-ng3	-	5.0	0.0	100.0	2/2
802d-tm1	-	5.0	0.0	100.0	0/0
802d-tm2	-	5.0	0.0	100.0	2/2
802d-tm3	-	5.0	0.0	100.0	2/2

Description: The clamping torque is set in this machine data as a % of the maximum motor torque (in the case of FDD this corresponds to the % of the max. current set-point).
The clamping torque becomes active as soon as the fixed stop is reached or the NC/PLC interface signal V380x 0001.1 (Acknowledge fixed stop reached) has been set.
The entered value is a default and is active only as long as

- no clamping torque has been programmed with command FXST[x]
- the clamping torque set in SD 43510: FIXED_STOP_TORQUE was not changed after fixed stop had been reached.

Related to:
SD 43510: FIXED_STOP_TORQUE
(clamping torque for travel to fixed stop)

37012	FIXED_STOP_TORQUE_RAMP_TIME			A10	-
s	Time period until reaching the changed torque limit			DOUBLE	NEW CONF
-					
802d-cu3	-	0.0	-	-	2/2
802d-ng2	-	0.0	-	-	1/1
802d-ng3	-	0.0	-	-	1/1
802d-tm1	-	0.0	-	-	0/0
802d-tm2	-	0.0	-	-	2/2
802d-tm3	-	0.0	-	-	2/2

Description: Period in seconds until the changed torque limit is reached.
The value 0.0 deactivates the ramp function.

37014	FIXED_STOP_TORQUE_FACTOR			A10	TE3
-	Adaption factor torque limit			DOUBLE	NEW CONF
-					
802d-cu3	-	1.0	-	-	2/2
802d-ng2	-	1.0	-	-	1/1
802d-ng3	-	1.0	-	-	1/1
802d-tm1	-	1.0	-	-	0/0
802d-tm2	-	1.0	-	-	2/2
802d-tm3	-	1.0	-	-	2/2

Description: Interface factor torque limit.
With this factor, the torque limit of linked slave axes (MD 37250) can be weighted additionally.
Even with different motors, the torque limits can be kept equal in all linked axes.

37020	FIXED_STOP_WINDOW_DEF			A05, A10	-
mm, degrees	Default fixed-stop monitoring window			DOUBLE	PowerOn
CTEQ					
802d-cu3	-	1.0	0.0	1.0e15	2/2
802d-ng2	-	1.0	0.0	1.0e15	2/2
802d-ng3	-	1.0	0.0	1.0e15	2/2
802d-tm1	-	1.0	0.0	1.0e15	0/0
802d-tm2	-	1.0	0.0	1.0e15	2/2
802d-tm3	-	1.0	0.0	1.0e15	2/2

Description:

This machine data is used to enter the default for the standstill monitoring window at fixed stop.

Fixed stop monitoring becomes active as soon as the fixed stop is reached, i.e. NC/PLC interface signal V390x 0002.5 (Fixed stop reached) is set.

If the position at which the fixed stop is detected is left by more than the tolerance specified in MD37020 $MA_FIXED_STOP_WINDOW_DEF alarm 20093 "Fixed stop monitoring has responded" is output and the "FXS" function is deselected.

The value entered is a default setting and is active only as long as

- no fixed stop monitoring window is programmed with command FXSW[x],
- the fixed stop monitoring window is not changed via SD 43520: FIXED_STOP_WINDOW (after reaching of fixed stop).

Related to:

SD43520 $SA_FIXED_STOP_WINDOW (fixed stop monitoring window)

37030	FIXED_STOP_THRESHOLD			A10, -	-
mm, degrees	Threshold for fixed stop detection			DOUBLE	NEW CONF
-					
802d-cu3	-	2.0	0.0	1.0e15	2/2
802d-ng2	-	2.0	0.0	1.0e15	2/2
802d-ng3	-	2.0	0.0	1.0e15	2/2
802d-tm1	-	2.0	0.0	1.0e15	0/0
802d-tm2	-	2.0	0.0	1.0e15	2/2
802d-tm3	-	2.0	0.0	1.0e15	2/2

Description:

Threshold value for fixed stop detection.

The contour deviation is checked for this threshold as a criterion for reaching the fixed stop. Waiting until the set torque limit is reached is a further condition for digital drives.

This machine data is only active if MD37040 $MA_FIXED_STOP_BY_SENSOR = 0.

The NC/PLC interface signal V390x 0002.5 (Fixed stop reached) is set if the axial contour deviation exceeds the threshold value set in MD37030 $MA_FIXED_STOP_THRESHOLD.

MD irrelevant to:

MD37040 $MA_FIXED_STOP_BY_SENSOR = 1

Related to:

NC/PLC interface signal V390x 0002.5 (Fixed stop reached)

37040	FIXED_STOP_BY_SENSOR			A10	-
-	Fixed stop detection by sensor			BYTE	Immediately
CTEQ					
802d-cu3	-	0	0	3	2/2
802d-ng2	-	0	0	3	2/2
802d-ng3	-	0	0	3	2/2
802d-tm1	-	0	0	3	0/0
802d-tm2	-	0	0	3	2/2
802d-tm3	-	0	0	3	2/2

Description:

This machine data defines how the criterion "Fixed stop reached" is determined.

A change of this machine data becomes active with the next selection of travel to fixed stop.

MD=0

The criterion "Fixed stop reached" is determined internally on the basis of the axial FIXED_STOP_THRESHOLD.

MD=1

The criterion "Fixed stop reached" is determined via an external sensor and signalled to the NC via the NC/PLC interface signal V380x 0001.2 (Sensor fixed stop).

MD=2

The criterion "Fixed stop reached" is accepted if either the contour monitoring (MD = 0) or the signal of the external sensor (MD = 1) has responded.

Related to:

MD37030 $MA_FIXED_STOP_THRESHOLD

(threshold for fixed stop detection)

NC/PLC interface signal V380x 0001.2 (Sensor fixed stop)

37050	FIXED_STOP_ALARM_MASK			A05, A10	-
-	Enable of the fixed stop alarms			BYTE	NEW CONF
-					
802d-cu3	-	1	0	15	2/2
802d-ng2	-	1	0	15	2/2
802d-ng3	-	1	0	15	2/2
802d-tm1	-	1	0	15	0/0
802d-tm2	-	1	0	15	2/2
802d-tm3	-	1	0	15	2/2

Description:

This machine data defines whether the alarms
20091 "Fixed stop not reached",
20094 "Fixed stop aborted" and
25042 "FOC: Standstill monitoring" are output.

MD= 0

Suppression of alarm 20091 "Fixed stop not reached"

MD= 2

Suppression of alarms
20091 "Fixed stop not reached" and
20094 "Fixed stop aborted"

MD=3

Suppression of alarm 20094 "Fixed stop aborted"

37052	FIXED_STOP_ALARM_REACTION			A05, A10	-
-	Reaction with fixed stop alarms			BYTE	PowerOn
-					
-	-	0	-	-	1/1

Description: Behavior of VDI signal "Mode group ready" in case of fixed stop alarms:
Bit value = 0: "Mode group ready" will be deleted (drives de-energized)
Bit value = 1: "Mode group ready" remains active
Bit0: Alarm 20090 Travel to fixed stop not possible
Bit1: Alarm 20091 Fixed stop not reached
Bit2: Alarm 20092 Travel to fixed stop still active
Bit3: Alarm 20093 Standstill monitoring at fixed stop has triggered
Bit4: Alarm 20094 Travel to fixed stop aborted
All other bits without meaning.
Standard: 0 = All alarms de-energize the drives

37060	FIXED_STOP_ACKN_MASK			A10	-
-	Waiting for PLC acknowledgements during travel to fixed stop			BYTE	PowerOn
CTEQ					
802d-cu3	-	0	0	3	2/2
802d-ng2	-	0	0	3	2/2
802d-ng3	-	0	0	3	2/2
802d-tm1	-	0	0	3	0/0
802d-tm2	-	0	0	3	2/2
802d-tm3	-	0	0	3	2/2

Description: This machine data defines whether or not the NC waits for acknowledgement messages from the PLC when the "Travel to fixed stop" function is active.

Bit 0 = 0

Once the NC has transmitted interface signal V390x 0002.4 (Activate travel to fixed stop) to the PLC, it starts the programmed traversing.

Bit 0 = 1

After the NC has transmitted interface signal V390x 0002.4 (Activate travel to fixed stop) to the PLC, it waits for the PLC to acknowledge with interface signal V380x 0003.1 (Enable travel to fixed stop) and then starts the programmed traversing.

Bit 0 should be set to 1 for analog drives so that the motion is not started before the PLC has limited the torque in the drive.

Bit 1 = 0

Once the NC has transmitted the interface signal V390x 0002.5 (Fixed stop reached) to the PLC, the program advances to the next block..

Bit 1 = 1

After the NC has transmitted the interface signal V390x 0002.5 (Fixed stop reached) to the PLC, it waits for the PLC to acknowledge with interface signal V380x 0001.1 (Acknowledge fixed stop reached), outputs the programmed torque and then advances to the next block.

Bit 1 should be set for analog drives so that the PLC can switch the drive to torque-controlled operation if a programmable clamping torque has to be specified.

With digital drives (SIMODRIVE611D, PROFIdrive), the "Travel to fixed stop" function can be executed without any acknowledgements, thus allowing program run times to be reduced.

Related to:

NC/PLC interface signal V390x 0002.4 (Activate travel to fixed stop)

NC/PLC interface signal V380x 0003.1 (Enable travel to fixed stop)

NC/PLC interface signal V390x 0002.5 (Fixed stop reached)

NC/PLC interface signal V380x 0001.1 (Acknowledge fixed stop reached)

37070	FIXED_STOP_ANA_TORQUE			A10	-
%	Torque limit when approaching the fixed stop for analog drives			DOUBLE	PowerOn
CTEQ					
-	-	5.0	0.0	100.0	0/0

Description:

Only for analog drives (irrelevant to digital drives SIMODRIVE611D or PROFIdrive):

This machine data defines an internal NC torque limit for analog drives. It is specified as a percentage of the maximum drive torque (corresponds to % of max. current setpoint with FDD).

This torque limit is active in the NC from the start of the motion (acceleration torque) until the instant the fixed stop is reached.

The torque limit must have the same effect as the torque limit set in the drive (SIMODRIVE611D-A).

This torque limit is required to ensure that

- there are no step changes in torque during switchover from speed-controlled to current-controlled or torque-controlled operation,
- the acceleration is reduced to the correct value in the NC.

37080	FOC_ACTIVATION_MODE			A10	-
-	Initial setting of modal torque/force limitation			BYTE	PowerOn
-					
-	-	0	0	3	0/0

Description:

The initial setting of the modal torque/force limitation is set with this MD after reset and PowerOn:

Bit 0: Response after PowerON

= 0 : FOCOF

= 1 : FOCON (modal)

Bit 1: Response after reset

= 0 : FOCOF

= 1 : FOCON (modal)

Default setting: FOCOF after reset and PowerOn

37100	GANTRY_AXIS_TYPE			A01, A10	G1,TE1,Z3
-	Gantry axis definition			BYTE	PowerOn
CTEQ					
802d-cu3	-	0	0	33	2/2
802d-ng2	-	0	0	33	-1/2
802d-ng3	-	0	0	33	-1/2
802d-tm1	-	0	0	33	-1/2
802d-tm2	-	0	0	33	2/2
802d-tm3	-	0	0	33	2/2

Description:

General: decimal representation, with a b

a

0: Leading axis

1: Synchronized axis

b

0: No gantry axis

1: Axis in gantry grouping 1

2: Axis in gantry grouping 2

3: Axis in gantry grouping 3

...

A max. of 8 gantry groupings is possible.

Examples:

11: Axis is a synchronized axis in a gantry grouping 1

2: Axis is a leading axis in gantry a grouping 2

12: Axis is a synchronized axis in a gantry grouping 2

3: Axis is a leading axis in a gantry grouping 3

13:Axis is a synchronized axis in a gantry grouping 3

Special cases:

Alarm 10650 "Incorrect gantry machine data" and 10651 "Gantry unit not defined" in the case of an incorrect gantry axis definition.

Related to:

MD37110 $MA_GANTRY_POS_TOL_WARNING (gantry warning limit)

MD37120 $MA_GANTRY_POS_TOL_ERROR (gantry trip limit)

MD37130 $MA_GANTRY_POS_TOL_REF (gantry trip limit during referencing)

37110	GANTRY_POS_TOL_WARNING			A05, A10	G1,Z3
mm, degrees	Gantry warning limit			DOUBLE	Reset
-					
802d-cu3	-	0.0	-1e15	1e15	2/2
802d-ng2	-	0.0	-1e15	1e15	-1/2
802d-ng3	-	0.0	-1e15	1e15	-1/2
802d-tm1	-	0.0	-1e15	1e15	-1/2
802d-tm2	-	0.0	-1e15	1e15	2/2
802d-tm3	-	0.0	-1e15	1e15	2/2

Description:

Value > 0

With gantry axes, the difference between the position actual values of the leading and synchronized axes is constantly monitored.

MD37110 $MA_GANTRY_POS_TOL_WARNING is used to define a limit value for the position actual value difference; when the limit is exceeded, warning 10652 "Warning limit exceeded" is output. However, the gantry axes are not stopped internally in the control. The warning threshold must therefore be selected so that the machine can withstand the position actual value deviation between the gantry axes without sustaining mechanical damage.

Furthermore, the NC/PLC interface signal V390x 5005.3 (Gantry warning limit exceeded) to the PLC is set to "1". The PLC user program can thus initiate the necessary measures (e.g. program interruption at block end) when the warning limit is exceeded.

As soon as the current position actual value difference has dropped below the warning limit again, the message is canceled and the interface signal "Gantry warning limit exceeded" is reset.

Effect of the gantry warning limit on the gantry synchronization process:

The position actual value difference between the leading and synchronized axes is determined during gantry synchronization. If the deviation is less than the gantry warning limit, the synchronizing motion of the gantry axes is automatically started internally in the control.

Otherwise the synchronizing motion has to be initiated via the PLC interface (interface signal (Gantry-Synchronization run ready to start)).

Otherwise the synchronizing motion has to be initiated via the PLC interface (interface signal V380x 5005.4 (Start gantry synchronization process))

Value = 0

The setting MD37110 $MA_GANTRY_POS_TOL_WARNING = 0 deactivates the monitoring for violation of the warning limit.

The gantry synchronization is not initiated internally in the control.

Special cases:

Alarm 10652 "Warning limit exceeded" in response to violation of the gantry warning limit.

Related to:

MD37100 $MA_GANTRY_AXIS_TYPE Gantry axis definition

MD37120 $MA_GANTRY_POS_TOL_ERROR Gantry trip limit

MD37130 $MA_GANTRY_POS_TOL_REF

Gantry trip limit during referencing

NC/PLC interface signal V390x 5005.3 (Gantry warning limit exceeded)

NC/PLC interface signal V380x 5005.4 (Start gantry synchronization process)

37120	GANTRY_POS_TOL_ERROR			A05, A10	G1,Z3
mm, degrees	Gantry trip limit			DOUBLE	PowerOn
-					
802d-cu3	-	0.0	-1e15	1e15	2/2
802d-ng2	-	0.0	-1e15	1e15	-1/2
802d-ng3	-	0.0	-1e15	1e15	-1/2
802d-tm1	-	0.0	-1e15	1e15	-1/2
802d-tm2	-	0.0	-1e15	1e15	2/2
802d-tm3	-	0.0	-1e15	1e15	2/2

Description:

With gantry axes, the difference between the position actual values of the leading and synchronized axes is continuously monitored. MD37120 $MA_GANTRY_POS_TOL_ERROR defines the maximum permissible deviation in position actual value between the synchronized axis and the leading axis in the gantry axis grouping. Violation of this limit value is monitored only if the gantry axis grouping is already synchronized (NC/PLC interface signal V390x 5005.5 (Gantry grouping is synchronized) = 1); otherwise the value set in MD37130 $MA_GANTRY_POS_TOL_REF is used.

When this limit value is exceeded, alarm 10653 "Error limit exceeded" is output. The gantry axes are immediately stopped internally in the control to prevent any damage to the machine.
In addition, the NC/PLC interface signal is ... (Gantry-Abschaltgrenze überschritten) an die PLC auf "1" gesetzt.
In addition, the NC/PLC interface signal V390x 5005.2 (Gantry trip limit exceeded) to the PLC is set to "1".
Special cases:

Alarm 10653 "Error limit exceeded" in response to violation of the gantry trip limit.

Related to:

MD37100 $MA_GANTRY_AXIS_TYPE Gantry axis definition
MD37110 $MA_GANTRY_POS_TOL_WARNING Gantry warning limit
MD37130 $MA_GANTRY_POS_TOL_REF
Gantry trip limit during referencing
NC/PLC interface signal V390x 5005.5 (Gantry grouping is synchronized)
NC/PLC interface signal V390x 5005.2 (Gantry trip limit exceeded)

37130	GANTRY_POS_TOL_REF			A05, A10	G1,Z3
mm, degrees	Gantry trip limit during referencing			DOUBLE	PowerOn
-					
802d-cu3	-	0.0	-1e15	1e15	2/2
802d-ng2	-	0.0	-1e15	1e15	-1/2
802d-ng3	-	0.0	-1e15	1e15	-1/2
802d-tm1	-	0.0	-1e15	1e15	-1/2
802d-tm2	-	0.0	-1e15	1e15	2/2
802d-tm3	-	0.0	-1e15	1e15	2/2

Description: With gantry axes, the difference between the position actual values of the leading and synchronized axes is continuously monitored. MD37130 $MA_GANTRY_POS_TOL_REF defines the maximum permissible difference between the position actual values of the synchronized axis and the leading axis that is monitored if the gantry axis grouping has not yet been synchronized (NC/PLC interface signal V390x 5005.5 (Gantry grouping is synchronized) = 0).
Alarm 10653 "Error limit exceeded" is output if the limit value is exceeded. The gantry axes are immediately stopped internally in the control to prevent any damage to the machine.
In addition, the NC/PLC interface signal V390x 5005.2 (Gantry trip limit exceeded) to the PLC is set to "1".
Special cases:
Alarm 10653 "Error limit exceeded" in response to violation of the gantry trip limit.
Related to:
MD37100 $MA_GANTRY_AXIS_TYPE Gantry axis definition
MD37110 $MA_GANTRY_POS_TOL_WARNING Gantry warning limit
MD37120 $MA_GANTRY_POS_TOL_ERROR Gantry trip limit
NC/PLC interface signal V390x 5005.5 (Gantry grouping is synchronized)
NC/PLC interface signal V390x 5005.2 (Gantry trip limit exceeded)

37135	GANTRY_ACT_POS_TOL_ERROR			A05, A10	-
mm, degrees	Current gantry trip limit			DOUBLE	Reset
-					
802d-cu3	-	0.0	-	-	2/2
802d-ng2	-	0.0	-	-	-1/2
802d-ng3	-	0.0	-	-	-1/2
802d-tm1	-	0.0	-	-	-1/2
802d-tm2	-	0.0	-	-	2/2
802d-tm3	-	0.0	-	-	2/2

Description: Actual value difference between master axis and slave axis in the case of alarm 10653.
Leads to alarm 10657 after Power ON.

37140	GANTRY_BREAK_UP			EXP, A01, A10	G1,Z3
-	Invalidate gantry axis grouping			BOOLEAN	Reset
CTEQ					
802d-cu3	-	FALSE	-	-	2/2
802d-ng2	-	FALSE	-	-	-1/2
802d-ng3	-	FALSE	-	-	-1/2
802d-tm1	-	FALSE	-	-	-1/2
802d-tm2	-	FALSE	-	-	2/2
802d-tm3	-	FALSE	-	-	2/2

Description:

GANTRY_BREAK_UP = "0"

The forced coupling of the gantry axis grouping remains valid. Monitoring of violation of the gantry warning or trip limit is active.

GANTRY_BREAK_UP = "1"

This invalidates the forced coupling of the gantry grouping, thus allowing all gantry axes in this grouping to be traversed individually in manual mode. The monitoring for violation of the gantry warning or trip limit is deactivated. The NC/PLC interface signal "Gantry grouping is synchronized" is set to "0".

Notice:

In cases where the gantry axes are still mechanically coupled, the machine may sustain damage in this operating state when the leading or synchronized axis is traversed.

The gantry axes cannot be referenced individually.

Related to:

MD37100 $MA_GANTRY_AXIS_TYPE Gantry axis definition

MD37110 $MA_GANTRY_POS_TOL_WARNING Gantry warning limit

MD37130 $MA_GANTRY_POS_TOL_REF
Gantry trip limit during referencing

NC/PLC interface signal V390x 5005.5 (Gantry grouping is synchronized)

NC/PLC interface signal V390x 5005.2 (Gantry trip limit exceeded)

37150	GANTRY_FUNCTION_MASK			A10	G1
-	Gantry functions			DWORD	Reset
-					
802d-cu3	-	0x00	0	0x3	2/2
802d-ng2	-	0x00	0	0x3	-1/2
802d-ng3	-	0x00	0	0x3	-1/2
802d-tm1	-	0x00	0	0x3	-1/2
802d-tm2	-	0x00	0	0x3	2/2
802d-tm3	-	0x00	0	0x3	2/2

Description:

Special gantry functions are set with this MD.

The MD is bit-coded, the following bits are assigned:

Bit 0 == 0:

Extended monitoring of the actual value difference is inactive.

An offset between master and slave axes occurring in the tracking or BREAK_UP is not taken into account in the monitoring of the actual value difference.

Alarm 10657 is not output if alarm 10563 occurs before Power OFF.

Bit 0 == 1:
Extended monitoring of the actual value difference is active.
An offset between master and slave axes occurring in the tracking or BREAK_UP is taken into account in the monitoring of the actual value difference.
Prerequisite: The gantry grouping must be re-referenced or re-synchronized after starting of the control.
Alarm 10657 is output if alarm 10563 occurs before Power OFF.
Bit 1 == 0:
Zero mark search direction of the slave axis analogous to MD 34010
Bit 1 == 1:
Zero mark search direction of the slave axis same as for master axis

37240	COUP_SYNC_DELAY_TIME			A05, A10	-
s	Delay time actual value synchronism			DOUBLE	NEW CONF
-					
-	2	60, 30	-	-	0/0

Description: Synchronous spindle coupling: delay time - monitors the time taken to reach actual value synchronism after reaching setpoint synchronism.
MD37240 $MA_COUP_SYNC_DELAY_TIME[0]: time to reach 'Synchronism fine'
MD37240 $MA_COUP_SYNC_DELAY_TIME[1]: time to reach 'Synchronism coarse'
If the value "0" is entered, the relevant monitoring is inactive
Related to:
MD 37200 $MA_COUPLE_POS_TOL_COARSE
MD 37210 $MA_COUPLE_POS_TOL_FINE
MD 37220 $MA_COUPLE_VELO_TOL_COARSE
MD 37230 $MA_COUPLE_VELO_TOL_FINE

37250	MS_ASSIGN_MASTER_SPEED_CMD			A10	TE3
-	Master axis number for speed setpoint coupling			DWORD	PowerOn
-					
-	-	0	0	31	0/0

Description: A master/slave speed setpoint linkage is configured by indicating the machine axis number of the master axis belonging to this slave.
Related to:
MD37252 $MA_MS_ASSIGN_MASTER_TORQUE_CTR

37252	MS_ASSIGN_MASTER_TORQUE_CTR			A10	TE3
-	Master axis number for torque control			DWORD	PowerOn
-					
-	-	0	0	31	0/0

Description: A torque control between the master and the slave axes is configured by stating the machine axis number of the master axis belonging to the slave.
A homogenous torque control is achieved by using the torque compensatory controller.
In order to do this, the controller has to know the actual torque values of the drives involved (these are available by default with SIMODRIVE611D, with PROFIdrive, the message frame used must include and transfer these values, e.g. use message frame 116).
With default setting = 0, the same master axis is used for torque control as for speed setpoint coupling MD37250 $MA_MS_ASSIGN_MASTER_SPEED_CMD.
Related to:
MD37250 $MA_MS_ASSIGN_MASTER_SPEED_CMD
MD37254 $MA_MS_TORQUE_CTRL_MODE
MD37256 $MA_MS_TORQUE_CTRL_P_GAIN
MD37258 $MA_MS_TORQUE_CTRL_I_TIME
MD37268 $MA_MS_TORQUE_WEIGHT_SLAVE

37253	MS_FUNCTION_MASK			A10	TE3
-	Master/slave settings			DWORD	NEW CONF
-					
-	-	0x0	-	-	0/0

Description: Parameterizing a master/slave coupling
Bit 0 = 0:
The scaling of MD37256 $MA_MS_TORQUE_CTRL_P_GAIN, MD37260 $MA_MS_MAX_CTRL_VELO is smaller than described in the documentation by the factor 1s/IPO cycle.
Bit 0 = 1:
The scaling of MD37256 $MA_MS_TORQUE_CTRL_P_GAIN, MD37260 $MA_MS_MAX_CTRL_VELO corresponds to the documentation.

37254	MS_TORQUE_CTRL_MODE			A10	TE3
-	Torque compensatory controller interconnection			DWORD	Immediately
-					
-	-	0	0	3	0/0

Description: The output of the torque compensatory controller is connected to
0: Master and slave axis
1: Slave axis
2: Master axis
3: No axis
when the torque control is active.
Related to:
MD37252 $MA_MS_ASSIGN_MASTER_TORQUE_CTR
MD37250 $MA_MS_ASSIGN_MASTER_SPEED_CMD
MD37254 $MA_MS_TORQUE_CTRL_MODE

37255	MS_TORQUE_CTRL_ACTIVATION			A10	TE3
-	Torque compensatory controller activation			BYTE	NEW CONF
-					
-	-	0	0	1	0/0

Description: The torque compensatory controller can be switched ON and OFF by means of MD37254 $MA_MS_TORQUE_CTRL_MODE or via the NC/PLC interface signal DB380x.DBX5000.4 (Torque compensatory controller).
In order to do this, the controller has to know the actual torque values of the drives involved (these are available by default with SIMODRIVE611D, with PROFIdrive, the message frame used must include and transfer these values, e.g. use message frame 116).
In the case of the PLC, MD37254 $MA_MS_TORQUE_CTRL_MODE is only used for configuring the interconnection of the torque compensatory controller.
0: Switch ON/OFF via MD37254
1: Switch ON/OFF via the NC/PLC interface signal DB380x.DBX5000.4 (Torque compensatory controller)

37256	MS_TORQUE_CTRL_P_GAIN			A10	TE3
%	Torque compensatory controller gain factor			DOUBLE	NEW CONF
-					
-	-	0.0	0.0	100.0	0/0

Description: Gain factor of the torque compensatory controller
The gain factor is entered in percent as the ratio of the maximum axis velocity of the slave axis on the load side to the rated torque.
The maximum axis velocity is derived from MD32000 $MA_MAX_AX_VELO, the rated torque from the product of drive machine data MD1725.
Related to:
MD37254 $MA_MS_TORQUE_CTRL_MODE
MD37258 $MA_MS_TORQUE_CTRL_I_TIME
MD32000 $MA_MAX_AX_VELO

37258	MS_TORQUE_CTRL_I_TIME			A10	TE3
s	Torque compensatory controller integral action time			DOUBLE	NEW CONF
-					
-	-	0.0	0.0	100.0	0/0

Description: Integral time of the torque compensatory controller
The integral time does not become active until the P gain factor is greater than 0.
Related to:
MD37254 $MA_MS_TORQUE_CTRL_MODE
MD37256 $MA_MS_TORQUE_CTRL_P_GAIN
MD32000 $MA_MAX_AX_VELO

37260	MS_MAX_CTRL_VELO			A10	TE3
%	Torque compensatory controller limit			DOUBLE	NEW CONF
-					
-	-	100.0	0.0	100.0	0/0

Description: Torque compensatory controller limitation
The speed setpoint value calculated by the torque compensatory controller is limited.
The limit that can be entered as a percentage refers to MD32000 $MA_MAX_AX_VELO of the slave axis.
Related to:
MD37254 $MA_MS_TORQUE_CTRL_MODE
MD37256 $MA_MS_TORQUE_CTRL_P_GAIN
MD37258 $MA_MS_TORQUE_CTRL_I_TIME
MD32000 $MA_MAX_AX_VELO

37262	MS_COUPLING_ALWAYS_ACTIVE			A10	TE3
-	Permanent master/slave link			BYTE	NEW CONF
-					
-	-	0	0	1	0/0

Description: Activation behavior of a master/slave coupling
0: Temporary coupling
The coupling is activated/deactivated via PLC interface signals and language commands.
1: Permanent coupling
This machine data activates the permanent coupling.
PLC interface signals and language commands do not have any effect.
Related to:
MD37252 $MA_MS_ASSIGN_MASTER_TORQUE_CTR
MD37250 $MA_MS_ASSIGN_MASTER_SPEED_CMD

37263	MS_SPIND_COUPLING_MODE			A10	TE3
-	Link response of a spindle			BYTE	NEW CONF
-					
-	-	0	0	1	0/0

Description: Link behavior of a speed-controlled spindle:
0: Link is closed/released in standstill only.
1: Link is closed/released already during motion.
The configuration is valid both for activation/deactivation via DB3x.DBX24.5 and for MASLON, MASLOF, MASLOFs, MASLDEL

37264	MS_TENSION_TORQUE			A10	TE3
%	Master/slave tension torque			DOUBLE	Immediately
-					
-	-	0.0	-100.0	100.0	0/0

Description: A constant tension torque between the master and the slave axis can be entered as a percentage of the rated drive torque of the slave axis.
Use of a tension torque requires an active torque compensatory controller (compare MD37255 $MA_MS_TORQUE_CTRL_ACTIVATION).
Related to:
MD37252 $MA_MS_ASSIGN_MASTER_TORQUE_CTR
MD37266 $MA_MS_TENSION_TORQ_FILTER_TIME
MD37255 $MA_MS_TORQUE_CTRL_ACTIVATION

37266	MS_TENSION_TORQ_FILTER_TIME			A10	TE3
s	Filter time constant tension torque			DOUBLE	NEW CONF
-					
-	-	0.0	0.0	100.0	0/0

Description: The tension torque between the master and slave axes can be activated via a PT1 filter. Any change of MD37264 $MA_MS_TENSION_TORQUE is then travelled out with the time constant of the filter.
As default, the filter is inactive; any torque change becomes active unfiltered.
Related to:
MD37264 $MA_MS_TENSION_TORQUE

37268	MS_TORQUE_WEIGHT_SLAVE			A10	TE3
%	Torque weighting of slave axis			DOUBLE	NEW CONF
-					
-	-	50.0	1.0	100.0	0/0

Description: The torque share that the slave axis contributes to the total torque can be configured via the weighting. This enables different torque shares to be implemented between the master and slave axes.
In the case of motors with the same rated torque, a 50% to 50% torque sharing is suggested.
The torque share of the master axis results implicitly from 100% - MD37268.
Related to:
MD37252 $MA_MS_ASSIGN_MASTER_TORQUE_CTR
MD37266 $MA_MS_TENSION_TORQ_FILTER_TIME

37270	MS_VELO_TOL_COARSE			A10	TE3,Z3
%	Master/slave speed tolerance coarse			DOUBLE	NEW CONF
-					
-	-	5.0	-	-	0/0

Description: Tolerance window, coarse, for the differential speed between the master and the slave.
If the speed difference is within the tolerance window, the NC/PLC interface signal (Master/ Slave Ausgleichr. aktiv) gesetzt.
If the speed difference is within the tolerance window, the NC/PLC interface signal V390x 5000.4 (Master-Slave compensatory controller active) is set.
The tolerance value is entered as a percentage of MD32000 $MA_MAX_AX_VELO.

37272	MS_VELO_TOL_FINE			A10	TE3,Z3
%	Master/slave speed tolerance fine			DOUBLE	NEW CONF
-					
-	-	1.0	-	-	0/0

Description: Tolerance window, fine, for the differential speed between the master and the slave.
If the speed difference is within the tolerance window, the NC/PLC interface signal (Master/Slave grob) gesetzt.
If the speed difference is within the tolerance window, the NC/PLC interface signal V390x 5000.3 (Master/Slave coarse) is set.
The tolerance value is entered as a percentage of MD32000 $MA_MAX_AX_VELO.

37274	MS_MOTION_DIR_REVERSE			A10	-
-	Inverting traversing direction slave axis			BYTE	NEW CONF
-					
-	-	0	0	1	0/0

Description: Inverting the traversing direction of a slave axis in the linked status.
0: Equidirectional to the master axis
1: Inverse to the master axis

37400	EPS_TLIFT_TANG_STEP			A10	T3
mm, degrees	Tangent angle for corner recognition			DOUBLE	Reset
CTEQ					
802d-cu3	-	5.0	-	-	2/2
802d-ng2	-	5.0	-	-	0/0
802d-ng3	-	5.0	-	-	2/2
802d-tm1	-	5.0	-	-	0/0
802d-tm2	-	5.0	-	-	0/0
802d-tm3	-	5.0	-	-	2/2

Description: If TLIFT has been programmed and the axis is tracked tangentially, a step of the position setpoint larger than MD37400 $MA_EPS_TLIFT_TANG_STEP causes an intermediate block to be inserted. The intermediate block traverses the axis to the position corresponding to the start tangent in the next block.
MD irrelevant if: TLIFT not activated
Related to:
TLIFT instruction

37402	TANG_OFFSET			A10	T3
mm, degrees	Default angle for tangential correction			DOUBLE	Reset
CTEQ					
802d-cu3	-	0.0	-	-	2/2
802d-ng2	-	0.0	-	-	0/0
802d-ng3	-	0.0	-	-	2/2
802d-tm1	-	0.0	-	-	0/0
802d-tm2	-	0.0	-	-	0/0
802d-tm3	-	0.0	-	-	2/2

Description: Default offset (angle), which the tracked axis forms with the tangent. The angle acts in addition to the angle programmed in the TANGON block.
MD irrelevant if tangential tracking not active.
Related to:
TANGON instruction

37500	ESR_REACTION			EXP, A01, A10, -	M3,P2
-	Axial mode of "Extended Stop and Retract"			BYTE	NEW CONF
CTEQ					
-	-	0	0	22	0/0

Description: Selection of the response to be triggered via system variable "$AN_ESR_TRIGGER".

0 = No response Reaktion (or only external response through synchronized action programming of rapid digital outputs).

21 = NC-controlled retraction axis

22 = NC-controlled stopping axis

37510	AX_ESR_DELAY_TIME1			EXP, A01, A10, -	P2
s	Delay time ESR single axis			DOUBLE	NEW CONF
CTEQ					
-	-	0.0	-	-	1/1

Description: If, for example, an alarm occurs, the deceleration time can be delayed by means of this MD, e.g. to allow in case of gear hobbing the retraction from the tooth gap first.

37511	AX_ESR_DELAY_TIME2			EXP, A01, A10, -	P2
s	ESR time for interpolatory deceleration of single axis			DOUBLE	NEW CONF
CTEQ					
-	-	0.0	-	-	1/1

Description: The time for interpolatory braking specified here in MD37511 $MA_AX_ESR_DELAY_TIME2 still remains after expiry of the time MD37510 $MA_AX_ESR_DELAY_TIME1.
Rapid braking with subsequent tracking is initiated after expiry of the time MD37511 $MA_AX_ESR_DELAY_TIME2.

37600	PROFIBUS_ACTVAL_LEAD_TIME			EXP, A01, A02	-
s	Actual value acquisition time (PROFIBUS/PROFINET Ti)			DOUBLE	PowerOn
-					
-	-	0.000125	0.0	0.032	0/0

Description: For PROFIBUS/PROFINET only:
Machine data for setting the actual value acceptance time (Ti) of the encoder on the PROFIBUS/PROFINET.
Unit: seconds; therefore default is 125µs
(this is also the default which STEP 7 sets for a 611U).
NOTICE:
The actual Ti value is read directly from the SDB configuration or the drive, if possible.
In this case, the machine data value is set to the read value and will only serve for display purposes.

37602	PROFIBUS_OUTVAL_DELAY_TIME			EXP, A01, A02	-
s	Setpoint delay time (PROFIBUS/PROFINET To)			DOUBLE	PowerOn
-					
-	-	0.003	0.0	0.032	0/0

Description: For PROFIBUS/PROFINET only:
Machine data for setting the setpoint acceptance time (To) on the PROFIBUS/PROFINET.
Unit: seconds
NOTICE:
The actual To value is read directly from the SDB configuration or the drive, if possible.
In this case, the value of the machine data is set to the read value and serves for display purposes only.

37610	PROFIBUS_CTRL_CONFIG			EXP, A01	-
-	PROFIdrive control bit configuration			BYTE	PowerOn
-					
-	-	0	0	2	2/2

Description: For PROFIdrive only:
Machine data for setting special PROFIdrive control word functionality:
0 =
default = no change of standard behavior
1 =
STW2, bits 0-1 are set depending on mode of operation/rapid traverse suppressing the setting of defaults for the VDI control bits "Parameter set bit0/1" from the PLC.
Bits 0-1 get the following combinations depending on the mode of operation, and controlled by NCK:
00 = Default (after Power-On)
01 = JOG (except for JOG-INC) or ((AUTOMATIC or MDI) and G0)
10 = ((AUTOMATIC or MDI) and not G0), other
11 = JOG-INC

2 =
Combination of MD=0 (preset by VDI) and MD=1 (internally preset):
MD=2 acts as MD=1, as long as there are no VDI control bits from the PLC, i.e. if the VDI control bits "Parameter set bit0/1" are both reset (0).
MD=2 acts as MD=0, if the VDI control bits "Parameter set bit0/1" are set both or individually (!=0). In this case, the VDI control bits are transferred directly to the drive (priority of VDI signals higher than that of internally created signals).

37620	PROFIBUS_TORQUE_RED_RESOL			EXP, A01	-
%	Resolution PROFIdrive torque reduction			DOUBLE	NEW CONF
-					
-	-	1.0	0.005	10.0	2/2

Description: For PROFIdrive only:
Resolution of the torque reduction on the PROFIdrive (LSB significance)
The MD is only relevant to controls with PROFIdrive drives. For these controls, it defines the resolution of the cyclic interface data "Torque reduction value" (only exists for MD13060 $MN_DRIVE_TELEGRAM_TYPE = 101 ff. or 201 ff.), which is required for the "Travel to fixed stop" functionality.
The 1% default value corresponds to the original significance. The torque limit is transferred on the PROFIdrive with increments of 1%; the value 100 in the corresponding PROFIdrive message frame data cell corresponds to full torque reduction (i.e. without force).
By changing this MD to 0.005%, for example, the value can be entered in increments of 0.005%, i.e. the increments for the torque limit value become finer by the factor 200.
For the limitation to the rated torque, the value 0 is transmitted in this case; a complete torque reduction (i.e. without force) characterizes the transmittable value 10000.
To avoid misadaptation, the setting value of the MD must be selected to match the interpretation configured on the drive side or the firmly defined interpretation of the torque reduction value. If the setting of the control on the drive (manufacturer-specific drive parameter) is known (i.e. with SIEMENS drives such as SIMODRIVE 611U or SINAMICS), the software automatically sets the MD, i.e. in this case the MD is merely used for display purposes.

37800	OEM_AXIS_INFO			A01, A11	-
-	OEM version information			STRING	PowerOn
-					
-	2	,	-	-	2/2

Description: A version information freely available to the user
(is indicated in the version screen)

2.4.8 Axis-specific memory settings

38000	MM_ENC_COMP_MAX_POINTS			A01, A09, A02	K3
-	Number of intermediate points for interpol. compensation (SRAM)			DWORD	PowerOn
-					
-	1	125	0	5000	7/0

Description: The number of interpolation points required per measuring system must be defined for the leadscrew error compensation.

The required number can be calculated as follows using the defined parameters:

$$MD38000\ \$MA_MM_ENC_COMP_MAX_POINTS = \frac{\$AA_ENC_COMP_MAX - \$AA_ENC_COMP_MIN}{\$AA_ENC_COMP_STEP} + 1$$

$AA_ENC_COMP_MIN	Initial position (system variable)
$AA_ENC_COMP_MAX	End position (system variable)
$AA_ENC_COMP_STEP	Distance between interpolation points (system variable)

When selecting the number of interpolation points and/or the distances between them, it is important to take into account the size of the resulting compensation table and the space required in the buffered NC user memory (SRAM). 8 bytes are required for each compensation value (interpolation point).

The index [n] has the following coding: [encoder no.]: 0 or 1

Special cases: Notice:

After any change in MD38000 $MA_MM_ENC_COMP_MAX_POINTS, the buffered NC user memory is automatically re-allocated on system power-on.

All data in the buffered NC user memory are then lost (e.g. part programs, tool offsets etc.). Alarm 6020 "Machine data changed - memory reallocated" is output.

If reallocation of the NC user memory fails because the total memory capacity available is insufficient, alarm 6000 "Memory allocation made with standard machine data" is output.

In this case, the NC user memory division is allocated using the default values of the standard machine data.

References:

/FB/, S7, "Memory Configuration"

/DA/, "Diagnostics Guide"

Related to:

MD32700 $MA_ENC_COMP_ENABLE[n]LEC active

References:

/FB/, S7, "Memory Configuration"

NC setting data

3

3.1 Setting data

Number	Identifier			Display filters	Reference
Unit	Name			Data type	Active
Attributes					
System	Dimension	Default value	Minimum value	Maximum value	Protection

Description: Description

3.1.1 General setting data

41010	JOG_VAR_INCR_SIZE			-	H1
-	Size of the variable increment for JOG			DOUBLE	Immediately
-					
-	-	0.	-	-	7/7

Description: This setting data defines the number of increments when variable increment (INCvar) is selected. This increment size is traversed by the axis in JOG mode each time the traverse key is pressed or the handwheel is turned one detent position and variable increment is selected (PLC interface signal "Active machine function: INC variable" for machine or geometry axes is set to 1).

Note:

Please note that the increment size is active for incremental jogging and handwheel jogging. So, if a large increment value is entered and the handwheel is turned, the axis might cover a large distance (depends on setting in MD31090 $MA_JOG_INCR_WEIGHT).

SD irrelevant to ......

JOG continuous

Related to ....

NC/PLC interface signal V3300 1001.5,1005.5,1009.5 (Geometry axis 1-3 active machine function: INC variable) or NC/PLC interface signal V390x 0005.5 (Active machine function: INC variable)

MD31090 $MA_JOG_INCR_WEIGHT (weighting of an increment for INC/handwheel)

41050	JOG_CONT_MODE_LEVELTRIGGRD			-	H1
-	Jog mode / continuous operation with continuous JOG			BOOLEAN	Immediately
-					
-	-	TRUE	-	-	1/1

Description: 1: Jog mode for JOG continuous

In jog mode (default setting) the axis traverses as long as the traverse key is held down and an axis limitation has not been reached. When the key is released the axis is decelerated to zero speed and the movement is considered complete.

0: Continuous operation for JOG continuous

In continuous operation the traverse movement is started with the first rising edge of the traverse key and continues to move even after the key is released. The axis can be stopped again by pressing the traverse key again (second rising edge).

SD irrelevant for ......
Incremental jogging (JOG INC)
Reference point approach (JOG REF)

41100	JOG_REV_IS_ACTIVE			-	-
-	JOG mode: (1) revolutional feedrate / (0) feedrate			BYTE	Immediately
-					
802d-cu3	-	0x0E	-	-	7/7
802d-ng2	-	0x0E	-	-	1/1
802d-ng3	-	0x0E	-	-	1/1
802d-tm1	-	0x0E	-	-	7/7
802d-tm2	-	0x0E	-	-	7/7
802d-tm3	-	0x0E	-	-	7/7

Description:

Bit 0 = 0:

The behavior depends on the following:

- in the case of an axis/spindle:
  on the axial SD43300 $SA_ASSIGN_FEED_PER_REV_SOURCE
- in the case of a geometry axis with an active frame with rotation:
  on the channel-specific SD42600 $SC_JOG_FEED_PER_REV_SOURCE
- in the case of an orientation axis:
  on the channel-specific SD42600 $SC_JOG_FEED_PER_REV_SOURCE

Bit 0 = 1:

A JOG motion with revolutional feedrate shall be traversed depending on the master spindle.

The following must be considered:

- If a spindle is the master spindle itself, it will be traversed without revolutional feedrate.
- If the master spindle is in stop position and if SD43300 $SA_ASSIGN_FEED_PER_REV_SOURCE (with an axis/spindle) or SD42600 $SC_JOG_FEED_PER_REV_SOURCE (with a geometry axis with an active frame with rotation, or with an orientation axis) = -3, traversing will be carried out without revolutional feedrate.

Bit 1 = 0:

The axis/spindle, geometry axis or orientation axis will be traversed with revolutional feedrate even during rapid traverse (see bit 0 for selection).

Bit 1 = 1:

The axis/spindle, geometry axis or orientation axis is always traversed without revolutional feedback during rapid traverse.

Bit 2 = 0:

The axis/spindle, geometry axis or orientation axis is traversed with revolutional feedrate during JOG handwheel travel, too (see bit 0 for selection).

Bit 2 = 1:

The axis/spindle, geometry axis or orientation axis is always traversed without revolutional feedrate during JOG handwheel travel.

Bit 3 = 0:

The axis/spindle is traversed with revolutional feedrate during DRF handwheel travel, too (see bit 0 for selection).

Bit 3 = 1:

The axis/spindle is always traversed without revolutional feedrate during DRF handwheel travel.

41110	JOG_SET_VELO			-	H1
mm/min	Axis velocity in JOG			DOUBLE	Immediately
-					
-	-	0.0	-	-	7/7

Description:

Value not equal to 0:

The velocity value entered applies to linear axes traversed in JOG mode if they are traversed manually using the "Traversing keys plus or minus".

The axis velocity is active for

- continuous jogging
- incremental jogging (INC1, ... INCvar)

The value entered must not exceed the maximum permissible axis velocity (MD32000 $MA_MAX_AX_VELO)

Value = 0:

The feedrate in JOG mode is the corresponding axis-specific MD32020 $MA_JOG_VELO "Convetional axis velocity". In this way, it is possible to define a separate JOG velocity for every axis.

Related to ....

SD41100 $SN_JOG_REV_IS_ACTIVE (revolutional feedrate with JOG active)

MD32020 $MA_JOG_VELO (JOG axis velocity)

MD32000 $MA_MAX_AX_VELO (maximum axis velocity)

SD41130 $SN_JOG_ROT_AX_SET_VELO (JOG speed with rotary axes)

41120	JOG_REV_SET_VELO			-	H1
mm/rev	Revolutional feedrate of axes in JOG mode			DOUBLE	Immediately
-					
802d-cu3	-	0.0	-	-	7/7
802d-ng2	-	0.0	-	-	1/1
802d-ng3	-	0.0	-	-	1/1
802d-tm1	-	0.0	-	-	7/7
802d-tm2	-	0.0	-	-	7/7
802d-tm3	-	0.0	-	-	7/7

Description:

Value not equal to 0:

The velocity value entered applies to axes traversed in JOG mode if revolutional feedrate (G95) is active for the relevant axis (SD41100 $SN_JOG_REV_IS_ACTIVE = 1). The axis velocity is active for

- continuous jogging
- incremental jogging (INC1, ... INCvar)
- handwheel traversing. The value entered is valid for all axes and must not exceed the maximum permissible axis velocity (MD32000 $MA_MAX_AX_VELO).

Value = 0:

If 0 has been entered in the setting data, the active revolutional feedrate in JOG mode is MD32050 $MA_JOG_REV_VELO "revolutional feedrate with JOG".

Each axis can be given its own revolutional feedrate with this MD (axial MD).

SD irrelevant for ......

- For axes if SD41100 $SN_JOG_REV_IS_ACTIVE = 0

Application example(s)

The operator can define a JOG velocity for a particular application.

Related to ....

Axial SD41100 $SN_JOG_REV_IS_ACTIVE (revolutional feedrate for JOG active)

Axial MD32050 $MA_JOG_REV_VELO (revolutional feedrate with JOG)

Axial MD32000 $MA_MAX_AX_VELO (maximum axis velocity)

41130	JOG_ROT_AX_SET_VELO			-	H1
rev/min	Axis velocity for rotary axes in JOG mode			DOUBLE	Immediately
-					
-	-	0.0	-	-	7/7

Description:

Value not equal to 0:

The velocity value entered applies to rotary axes traversed in JOG mode if they are traversed manually using the "Traversing keys plus or minus".

The axis velocity is active for

- continuous jogging
- incremental jogging (INC1, ... INCvar)

The value entered must not exceed the maximum permissible axis velocity (MD32000 $MA_MAX_AX_VELO).

Value = 0:

The feedrate in JOG mode is the corresponding axis-specific MD32020 $MA_JOG_VELO "Convetional axis velocity". In this way, it is possible to define a separate JOG velocity for every axis.

Application example(s)

The operator can define a JOG velocity for a particular application.

Related to ....

MD32020 $MA_JOG_VELO (JOG axis velocity)

MD32000 $MA_MAX_AX_VELO (maximum axis velocity)

41200	JOG_SPIND_SET_VELO			-	H1
rev/min	Speed for spindle JOG mode			DOUBLE	Immediately
-					
-	-	0.0	-	-	7/7

Description:

Value not equal to 0:

The speed entered applies to spindles in JOG mode if they are traversed manually by the "Plus and minus traversing keys" or the handwheel. The speed is active for

- continuous jogging
- incremental jogging (INC1, ... INCvar)

Value = 0:

If 0 has been entered in the setting data, MD32020 $MA_JOG_VELO (JOG axis velocity) acts as the JOG velocity. Each axis can thus be given its own JOG velocity with this MD (axis-specific MD).

The maximum speeds of the active gear stage (MD35130 $MA_GEAR_STEP_MAX_VELO_LIMIT) are taken into account when traversing the spindle with JOG.

Related to ....

Axial MD32020 $MA_JOG_VELO (JOG axis velocity)

MD35130 $MA_GEAR_STEP_MAX_VELO_LIMIT (maximum speeds of the gear stages)

41300	CEC_TABLE_ENABLE			-	K3
-	Compensation table enable			BOOLEAN	Immediately
-					
802d-cu3	2	FALSE,FALSE,FALSE,FALSE,FALSE,FALSE...	-	-	3/3
802d-ng2	2	FALSE,FALSE,FALSE,FALSE,FALSE,FALSE...	-	-	3/3
802d-ng3	2	FALSE,FALSE,FALSE,FALSE,FALSE,FALSE...	-	-	3/3
802d-tm1	2	FALSE,FALSE,FALSE,FALSE,FALSE,FALSE...	-	-	-1/7
802d-tm2	2	FALSE,FALSE,FALSE,FALSE,FALSE,FALSE...	-	-	3/3
802d-tm3	2	FALSE,FALSE,FALSE,FALSE,FALSE,FALSE...	-	-	3/3

Description:

1: The evaluation of the compensation table [t] is enabled.

The compensation table is now included in the calculation of the compensation value for the compensation axis.

The compensation axis $AN_CEC_OUTPUT_AXIS can be taken from the table configuration.

The effective total compensation value in the compensation axis can be adapted to the current machining by the targeted activation of tables (from NC part programm or PLC user program).

The function does not become active until the following conditions have been fulfilled:

- The option "Interpolatory compensation" is set
- The associated compensation tables in the NC user memory have been loaded and enabled (SD41300 $SN_CEC_TABLE_ENABLEt] = 1)
- The current position measuring system is referenced (NC/PLC interface signal V390x 0000.4 / .5 (Referenced/synchronized 1 or 2) = 1).

0: The evaluation of the sag compensation table [t] is not enabled.

Related to ....

MD18342 $MN_MM_CEC_MAX_POINTS[t] Number of interpolation points with sag compensation

SD41300 $SN_CEC_TABLE_ENABLE[t] Evaluation of the sag compensation table t is enabled

NC/PLC interface signal V390x 0000.4 (Referenced/synchronized 1)

NC/PLC interface signal V390x 0000.5 (Referenced/synchronized 2)

41310	CEC_TABLE_WEIGHT			-	K3
-	Weighting factor compensation table			DOUBLE	Immediately
-					
802d-cu3	2	1.0,1.0,1.0,1.0,1.0,1.0,1.0,1.0,1.0...	-	-	3/3
802d-ng2	2	1.0,1.0,1.0,1.0,1.0,1.0,1.0,1.0,1.0...	-	-	3/3
802d-ng3	2	1.0,1.0,1.0,1.0,1.0,1.0,1.0,1.0,1.0...	-	-	3/3
802d-tm1	2	1.0,1.0,1.0,1.0,1.0,1.0,1.0,1.0,1.0...	-	-	-1/7
802d-tm2	2	1.0,1.0,1.0,1.0,1.0,1.0,1.0,1.0,1.0...	-	-	3/3
802d-tm3	2	1.0,1.0,1.0,1.0,1.0,1.0,1.0,1.0,1.0...	-	-	3/3

Description: The compensation value stored in the table [t] is multiplied by the weighting factor.

When selecting the weighting factor it should be ensured that the total compensation value in the compensation axis does not exceed the maximal value of (MD18342 $MN_CEC_MAX_SUM). With [t] = index of the compensation table (see MD18342 $MN_MM_CEC_MAX_POINTS)

If, for example, the weight of the tools used on the machine or the workpieces to be machined are too different and this affects the error curve by changing the amplitude, this can be corrected by changing the weighting factor. In the case of sag compensation, the weighting factor in the table can be changed for specific tools or workpieces from the PLC user program or the NC program by overwriting the setting data. However, different compensation tables are to be used if the course of the error curve is substantially changed by the different weights.

Related to ....

SD41300 $SN_CEC_TABLE_ENABLE[t] Evaluation of the sag compensation table t is enabled

MD18342 $MN_CEC_MAX_SUM Maximum compensation value for sag compensation

41500	SW_CAM_MINUS_POS_TAB_1			-	N3
mm/inch, degrees	Trigger points at falling cam 1-8			DOUBLE	Immediately
-					
802d-cu3	8	0.0,0.0,0.0,0.0,0.0,0.0,0.0,0.0,0.0	-	-	7/7
802d-ng2	8	0.0,0.0,0.0,0.0,0.0,0.0,0.0,0.0,0.0	-	-	7/7
802d-ng3	8	0.0,0.0,0.0,0.0,0.0,0.0,0.0,0.0,0.0	-	-	7/7
802d-tm1	8	0.0,0.0,0.0,0.0,0.0,0.0,0.0,0.0,0.0	-	-	-1/7
802d-tm2	8	0.0,0.0,0.0,0.0,0.0,0.0,0.0,0.0,0.0	-	-	-1/7
802d-tm3	8	0.0,0.0,0.0,0.0,0.0,0.0,0.0,0.0,0.0	-	-	-1/7

Description: The cam positions of minus cams 1 - 8 are entered in this machine data.

The positions are entered in the machine coordinate system.

Index [n] of the setting data addresses the cam pair:

n = 0, 1, ... , 7 corresponds to cam pair 1, 2, ... , 8

When the set switching points are overtraveled in the positive axis direction, the associated "minus" cam signals in the PLC interface (and any applied fast output signals) switch from 1 to 0.

41501	SW_CAM_PLUS_POS_TAB_1			-	N3
mm/inch, degrees	Trigger points at rising cam edge 1-8			DOUBLE	Immediately
-					
802d-cu3	8	0.0,0.0,0.0,0.0,0.0,0.0,0.0,0.0	-	-	7/7
802d-ng2	8	0.0,0.0,0.0,0.0,0.0,0.0,0.0,0.0	-	-	7/7
802d-ng3	8	0.0,0.0,0.0,0.0,0.0,0.0,0.0,0.0	-	-	7/7
802d-tm1	8	0.0,0.0,0.0,0.0,0.0,0.0,0.0,0.0	-	-	-1/7
802d-tm2	8	0.0,0.0,0.0,0.0,0.0,0.0,0.0,0.0	-	-	-1/7
802d-tm3	8	0.0,0.0,0.0,0.0,0.0,0.0,0.0,0.0	-	-	-1/7

Description: The cam positions of plus cams 1 - 8 are entered in this machine data.
The positions are entered in the machine coordinate system.
Index [n] of the setting data addresses the cam pair:
n = 0, 1, ... , 7 corresponds to cam pair 1, 2, ... , 8
When the set switching points are overtraveled in the positive axis direction, the associated "plus" cam signals in the PLC interface (and any applied fast output signals) switch from 0 to 1.

41520	SW_CAM_MINUS_TIME_TAB_1			-	N3
s	Rate time for '-' trigger points of cams 1-8			DOUBLE	Immediately
-					
802d-cu3	8	0.0,0.0,0.0,0.0,0.0,0.0,0.0,0.0	-	-	7/7
802d-ng2	8	0.0,0.0,0.0,0.0,0.0,0.0,0.0,0.0	-	-	7/7
802d-ng3	8	0.0,0.0,0.0,0.0,0.0,0.0,0.0,0.0	-	-	7/7
802d-tm1	8	0.0,0.0,0.0,0.0,0.0,0.0,0.0,0.0	-	-	-1/7
802d-tm2	8	0.0,0.0,0.0,0.0,0.0,0.0,0.0,0.0	-	-	-1/7
802d-tm3	8	0.0,0.0,0.0,0.0,0.0,0.0,0.0,0.0	-	-	-1/7

Description: A lead or delay time can be assigned to each cam 1-8 in this setting data to compensate for delay times.
The switching edge of the associated cam signal is advanced or delayed by the time value entered.
Positive value: Lead time
Negative value: Delay time
Index [n] of the setting data addresses the cam pair:
n = 0, 1, ... , 7 corresponds to cam pair 1, 2, ... , 8
This setting data is added to MD: MD10460 $MN_SW_CAM_MINUS_LEAD_TIME[n].
Related to ....
MD10460 $MN_SW_CAM_MINUS_LEAD_TIME[n] (lead or delay time on minus cams 1 - 16)

41521	SW_CAM_PLUS_TIME_TAB_1			-	N3
s	Rate time for '+' trigger points of cams 1-8			DOUBLE	Immediately
-					
802d-cu3	8	0.0,0.0,0.0,0.0,0.0,0.0,0.0,0.0	-	-	7/7
802d-ng2	8	0.0,0.0,0.0,0.0,0.0,0.0,0.0,0.0	-	-	7/7
802d-ng3	8	0.0,0.0,0.0,0.0,0.0,0.0,0.0,0.0	-	-	7/7
802d-tm1	8	0.0,0.0,0.0,0.0,0.0,0.0,0.0,0.0	-	-	-1/7
802d-tm2	8	0.0,0.0,0.0,0.0,0.0,0.0,0.0,0.0	-	-	-1/7
802d-tm3	8	0.0,0.0,0.0,0.0,0.0,0.0,0.0,0.0	-	-	-1/7

Description: A lead or delay time can be assigned to each plus cam 1-8 in this setting data to compensate for delay times.

The switching edge of the associated cam signal is advanced or delayed by the time value entered.

Positive value: Lead time

Negative value: Delay time

Index [n] of the setting data addresses the cam pair:

n = 0, 1, ... , 7 corresponds to cam pair 1, 2, ... , 8

This setting data is added to MD10461 $MN_SW_CAM_PLUS_LEAD_TIME[n].

Related to ....

MD10461 $MN_SW_CAM_PLUS_LEAD_TIME[n] (lead or delay time on plus cams 1 - 16)

41600	COMPAR_THRESHOLD_1			-	A4
-	Threshold value of the 1st comparator			DOUBLE	Immediately
-					
-	8	0.0,0.0,0.0,0.0,0.0,0.0,0.0,0.0	-	-	-1/7

Description: COMPAR_THRESHOLD_1[b] defines the threshold values for the individual input bits [b] of comparator byte 1.

The output bit n of the 1st comparator is created by comparing the threshold value n according to the comparison type defined in bit n of COMPAR_TYPE_1.

For example:

COMPAR_ASSIGN_ANA_INPUT_1[2] = 4

COMPAR_TRESHOLD_1[2] = 5000.0

COMPAR_TYPE_1 = 5

The 3rd output bit of comparator 1 is set if the input value at AnalogIn 4 is greater than or equal to 5 volts.

Index [b]: Bits 0 - 7

Related to ....

MD10530 $MN_COMPAR_ASSIGN_ANA_INPUT_1

MD10531 $MN_COMPAR_ASSIGN_ANA_INPUT_2

MD10540 $MN_COMPAR_TYPE_1

MD10541 $MN_COMPAR_TYPE_2

41601	COMPAR_THRESHOLD_2			-	A4
-	Threshold value of the 2nd comparator			DOUBLE	Immediately
-					
-	8	0.0,0.0,0.0,0.0,0.0,0.0,0.0,0.0	-	-	-1/7

Description: COMPAR_THRESHOLD_1[b] defines the threshold values for the individual input bits [b] of comparator byte 1.

Output bit n of the 1st comparator is created by comparing the threshold value n according to the comparison type defined in bit n of COMPAR_TYPE_2.

Index [b]: Bits 0 - 7

Related to ....

MD10530 $MN_COMPAR_ASSIGN_ANA_INPUT_1

MD10531 $MN_COMPAR_ASSIGN_ANA_INPUT_2

MD10540 $MN_COMPAR_TYPE_1

MD10541 $MN_COMPAR_TYPE_2

3.1.2 Channel-specific setting data

42000	THREAD_START_ANGLE			-	K1
degrees	Starting angle for thread			DOUBLE	Immediately
-					
802d-cu3	-	0.,0.,0.,

42010	THREAD_RAMP_DISP			-	V1
mm	Acceleration behavior of axis when thread cutting			DOUBLE	Immediately
-					
802d-cu3	2	-1., -1.,-1., -1.,-1., -1.,-1., -1....	-1.	999999.	3/3
802d-ng2	2	-1., -1.,-1., -1.,-1., -1.,-1., -1....	-1.	999999.	0/0
802d-ng3	2	-1., -1.,-1., -1.,-1., -1.,-1., -1....	-1.	999999.	0/0
802d-tm1	2	-1., -1.,-1., -1.,-1., -1.,-1., -1....	-1.	999999.	3/3
802d-tm2	2	-1., -1.,-1., -1.,-1., -1.,-1., -1....	-1.	999999.	3/3
802d-tm3	2	-1., -1.,-1., -1.,-1., -1.,-1., -1....	-1.	999999.	3/3

Description:

The SD is active for thread cutting with G33 (G34, G35).

It features two elements that define the behavior of the thread axis during runup (1st element) and during deceleration/smoothing (2nd element).

The values have the same properties for thread run-in and thread run-out:

<0:

The thread axis is started/decelerated with configured acceleration. Jerk is according to the current programming of BRISK/SOFT. Behavior is compatible with MD 20650__THREAD_START_IS_HARD = FALSE used until now.

0:

Starting/deceleration of the feed axis during thread cutting is stepped. Behavior is compatible with MD 20650__THREAD_START_IS_HARD = TRUE used until now.

>0:

The maximum thread starting or deceleration path is specified. The specified distance can lead to acceleration overload of the axis. The SD is written from the block when DITR (displacement thread ramp) is programmed.

Note:

MD 10710 $MN_PROG_SD_RESET_SAVE_TAB can be be set so that the value written by the part program is transferred to the active file system on reset (that is the value is retained after reset.)

42100	DRY_RUN_FEED			-	V1
mm/min	Dry run feedrate			DOUBLE	Immediately
-					
-	-	5000.,5000.,5000.,5000.,5000.,5000....	-	-	7/7

Description:

The feedrate for the active dry run is entered in this setting data. The setting data can be altered on the operator panel in the "Parameters" operating area.

The entered dry run feedrate is always interpreted as a linear feed (G94). If the dry run feedrate is activated via the PLC interface, the dry run feedrate is used as the path feed after a reset instead of the programmed feed. The programmed velocity is used for traversing if it is greater than the velocity stored here.

Application example(s)

Program testing

Related to ....

NC/PLC interface signal V3200 0000.6 (Activate dry run feedrate)

NC/PLC interface signal V1700 0000.6 (Dry run feedrate selected)

42101	DRY_RUN_FEED_MODE			-	V1
-	Mode for dry run velocity			BYTE	Immediately
-					
-	-	0,0,0,0,0,0,0,0,0,0,0,0,0,0,0,0	0	12	7/7

Description: This SD can be used to set the method of operation of the dry run velocity set by SD42100 $SC_DRY_RUN_FEED.

The following values are possible:

0:

The maximum of SD42100 $SC_DRY_RUN_FEED and the programmed velocity become active. This is the standard setting and corresponds to the behavior up to SW 5.

1:

The minimum of SD42100 $SC_DRY_RUN_FEED and the programmed velocity become active.

2:

SD42100 $SC_DRY_RUN_FEED becomes active directly, irrespective of the programmed velocity.

The values 3...9 are reserved for extensions.

10:

As configuration 0, except for thread cutting (G33, G34, G35) and tapping (G331, G332, G63). These functions are executed as programmed.

11:

As configuration 1, except for thread cutting (G33, G34, G35) and tapping (G331, G332, G63). These functions are executed as programmed.

12:

As configuration 2, except for thread cutting (G33, G34, G35) and tapping (G331, G332, G63). These functions are executed as programmed.

42110	DEFAULT_FEED			-	V1,FBFA
mm/min	Path feed default value			DOUBLE	Immediately
-					
-	-	0.,0.,0.,0.,0.,0.,0.,0.,0.,0.,0.,0.,0.,0.,0.,0.	-	-	7/7

Description: Default value for path feedrate, This setting data is evaluated when the part program starts taking into account the feedrate type active at this time (see MD20150 $MC_GCODE_RESET_VALUES and MD20154 $MC_EXTERN_GCODE_RESET_VALUES).

42120	APPROACH_FEED			-	-
mm/min	Path feedrate in approach blocks			DOUBLE	Immediately
-					
-	-	0.,0.,0.,0.,0.,0.,0.,0.,0.,0.,0.,0.,0.,0.,0.,0.	-	-	2/2

Description: Default value for path feedrate in approach blocks (after repos., block search, SERUPRO etc).

The contents of this settting data are only used when it is non-zero.

It is evaluated like an F word programmed for G94.

42122	OVR_RAPID_FACTOR			-	$MN_OVR_FACTOR_RAPID_TRA,$AC_OVR
%	Add. rapid traverse override can be specified through operation			DOUBLE	Immediately
-					
-	-	100.,100.,100.,100.,100.,100.,100....	-	-	7/7

Description: Additional channel-specific rapid traverse override in %. The value is calculated to the path depending on OPI variable enablOvrRapidFactor. The value multiplies the other rapid traverse overrides (rapid traverse override of the machine control panel, override default through synchronized actions $AC_OVR).

42125	SERUPRO_SYNC_MASK			-	-
-	Ssynchronization in approach blocks			DWORD	Immediately
-					
-	-	0,0,0,0,0,0,0,0,0,0,0,0,0,0,0,0	-	-	1/1

Description: A synchronized approach can be set for the search type SERUPRO with the setting data SERUPRO_SYNC_MASK.

SERUPRO uses the function REPOS to move from the current machine position to the target block of the search. A synchronization of the channels can be forced between the reapproach block and the target block via SERUPRO_SYNC_MASK which would correspond to the use of wait markers.

Note:

The user cannot program wait markers between reapproach block and target block in a part program.

SERUPRO_SYNC_MASK activates this intermal wait marker, and defines for which other channels this channel is to wait.

Example for channel 3: $SC_SERUPRO_SYNC_MASK= 0x55

A new block is now inserted in the Serupro approach between the reapproach block and the target block, the function of which corresponds to the following programming: WAITM(101, 1,3,5,7), i.e. a wait mark synchronizes the channels 1, 3, 5 and 7.

The wait marks used internally cannot be explicitly programmed by the user.

NOTICE:

Similarly to the part program, the user can make the error of not setting the mark in a channel, so that the other channels naturally wait for ever!

Comment: The bit mask can contain a channel that does not exist (channel gaps) without a

deadlock occurring.

Example for channel 3: $SC_SERUPRO_SYNC_MASK= 0x55 and channel 5 do not exist, so WAITM(101, 1,3,7) is set.

Note: The block content corresponds to "WAITM(101, 1,3,5,7)", the user does not see this block content, he sees REPOSA!

Note:

SERUPRO_SYNC_MASK is evaluated as soon as the part program command REPOSA is interpreted.

SERUPRO_SYNC_MASK can still be changed if SERUPRO is in the state "search target found".

If REPOSA has already been executed, a change to SERUPRO_SYNC_MASK can only become active if a new REPOS is set. This occurs, for example, by:

- Starting a new ASUB.
- STOP-JOG-AUTO-START
- STOP - select a new REPOS mode RMI/RMN/RME/RMB - START

Comment:

If one use the prog. event for search and if the NCK is at alarm 10208 then a change of SERUPRO_SYNC_MASK is not active unless one sets a new REPOS.

SERUPRO_SYNC_MASK == 0 A block is NOT inserted.

Note:

If the bit for the current channel is not set in SD42125 $SC_SERUPRO_SYNC_MASK then a block is NOT inserted.

Example:

If $SC_SERUPRO_SYNC_MASK= 0xE is programmed in channel 1, then a block is NOT inserted.

This assignment is reserved for a future function!

42140	DEFAULT_SCALE_FACTOR_P			-	FBFA
-	Default scaling factor for address P			DWORD	Immediately
-					
802d-cu3	-	1,1,1,1,1,1,1,1,1,1,1,1,1,1,1,1	-	-	7/7
802d-ng2	-	1,1,1,1,1,1,1,1,1,1,1,1,1,1,1,1	-	-	-1/7
802d-ng3	-	1,1,1,1,1,1,1,1,1,1,1,1,1,1,1,1	-	-	-1/7
802d-tm1	-	1,1,1,1,1,1,1,1,1,1,1,1,1,1,1,1	-	-	7/7
802d-tm2	-	1,1,1,1,1,1,1,1,1,1,1,1,1,1,1,1	-	-	7/7
802d-tm3	-	1,1,1,1,1,1,1,1,1,1,1,1,1,1,1,1	-	-	7/7

Description: The value in this machine data is active if no scaling factor P has been programmed in the block.

Related to:

WEIGHTING_FACTOR_FOR_SCALE

42150	DEFAULT_ROT_FACTOR_R			-	-
-	Default rotation factor for address R			DOUBLE	Immediately
-					
-	-	0.,0.,0.,0.,0.,0.,0.,0.,0.,0.,0.,0.,0.,0.,0.,0.,0.,0.,0.,0....	-	-	7/7

Description: The value in this machine data is active if no factor for rotation R is programmed in the block.

42160	EXTERN_FIXED_FEEDRATE_F1_F9			-	FBFA
-	Fixed feedrates F1 - F9			DOUBLE	Immediately
-					
802d-cu3	10	0., 0., 0., 0., 0., 0., 0., 0., 0., 0....	-	-	7/7
802d-ng2	10	0., 0., 0., 0., 0., 0., 0., 0., 0., 0....	-	-	-1/7
802d-ng3	10	0., 0., 0., 0., 0., 0., 0., 0., 0., 0....	-	-	-1/7
802d-tm1	10	0., 0., 0., 0., 0., 0., 0., 0., 0., 0....	-	-	7/7
802d-tm2	10	0., 0., 0., 0., 0., 0., 0., 0., 0., 0....	-	-	7/7
802d-tm3	10	0., 0., 0., 0., 0., 0., 0., 0., 0., 0....	-	-	7/7

Description: Fixed feedrate values for programming with F1 - F9. If the machine data $MC_FEEDRATE_F1_F9_ON = TRUE is set with the programming of F1 - F9, the feedrate values are read from SD42160 $SC_EXTERN_FIXED_FEEDRATE_F1_F9[0] - $SC_EXTERN_FIXED_FEEDRATE_F1_F9[8], and activated as the machining feedrate.

The rapid traverse feedrate must be entered in SD42160 $SC_EXTERN_FIXED_FEEDRATE_F1_F9[0].

42162	EXTERN_DOUBLE_TURRET_DIST			-	FBFA
-	Double turret head tool distance			DOUBLE	Immediately
-					
802d-cu3	-	0.,0.,0.,0.,0.,0.,0.,0.,0.,0.,0.,0.,0....	-	-	7/7
802d-ng2	-	0.,0.,0.,0.,0.,0.,0.,0.,0.,0.,0.,0.,0....	-	-	-1/7
802d-ng3	-	0.,0.,0.,0.,0.,0.,0.,0.,0.,0.,0.,0.,0....	-	-	-1/7
802d-tm1	-	0.,0.,0.,0.,0.,0.,0.,0.,0.,0.,0.,0.,0....	-	-	7/7
802d-tm2	-	0.,0.,0.,0.,0.,0.,0.,0.,0.,0.,0.,0.,0....	-	-	7/7
802d-tm3	-	0.,0.,0.,0.,0.,0.,0.,0.,0.,0.,0.,0.,0....	-	-	7/7

Description: Distance between both tools of a double turret head.

The distance is activated using G68 as additive zero point offset if MD10812 $MN_EXTERN_DOUBLE_TURRET_ON is set to TRUE.

42200	SINGLEBLOCK2_STOPRE			-	BA
-	Activate SBL2 debug mode			BOOLEAN	Immediately
-					
-	-	FALSE,FALSE,FALSE,FALSE,FALSE,FALSE...	-	-	7/7

Description: Value = TRUE:

A preprocessing stop is made with every block if SBL2 (single block with stop after every block) is active. This suppresses the premachining of part program blocks. This variant of the SBL2 is not true-to-contour.

This means that a different contour characteristic might be generated as a result of the preprocessing stop than without single block or with SBL1.

Application: Debug mode for testing part programs.

42400	PUNCH_DWELLTIME			-	N4
s	Dwell time for punching and nibbling			DOUBLE	Immediately
-					
802d-cu3	-	1.0,0.0,0.0,0.0,0.0,0.0,0.0,0.0,0.0,0.0...	-	-	3/3
802d-ng2	-	1.0,0.0,0.0,0.0,0.0,0.0,0.0,0.0,0.0,0.0...	-	-	3/3
802d-ng3	-	1.0,0.0,0.0,0.0,0.0,0.0,0.0,0.0,0.0,0.0...	-	-	3/3
802d-tm1	-	1.0,0.0,0.0,0.0,0.0,0.0,0.0,0.0,0.0,0.0...	-	-	0/0
802d-tm2	-	1.0,0.0,0.0,0.0,0.0,0.0,0.0,0.0,0.0,0.0...	-	-	0/0
802d-tm3	-	1.0,0.0,0.0,0.0,0.0,0.0,0.0,0.0,0.0,0.0...	-	-	0/0

Description: This data sets the dwell time between reaching the position and triggering the stroke.

The set value is rounded to an integer multiple of the interpolation cycle. (This means that the value set here can only differ slightly from that which is actually executed.)

Note:

MD10710 $MN_PROG_SD_RESET_SAVE_TAB can be set so that the value written by the part program is transferred into the active file system on reset (i.e. the value is retained even after the reset).

42402	NIBPUNCH_PRE_START_TIME			-	N4
s	Delay time (punch/nibble) with G603			DOUBLE	Immediately
-					
802d-cu3	-	.02,0.0,0.0,0.0,0.0,0.0,0.0,0.0,0.0,0.0...	-	-	3/3
802d-ng2	-	.02,0.0,0.0,0.0,0.0,0.0,0.0,0.0,0.0,0.0...	-	-	3/3
802d-ng3	-	.02,0.0,0.0,0.0,0.0,0.0,0.0,0.0,0.0,0.0...	-	-	3/3
802d-tm1	-	.02,0.0,0.0,0.0,0.0,0.0,0.0,0.0,0.0,0.0...	-	-	0/0
802d-tm2	-	.02,0.0,0.0,0.0,0.0,0.0,0.0,0.0,0.0,0.0...	-	-	0/0
802d-tm3	-	.02,0.0,0.0,0.0,0.0,0.0,0.0,0.0,0.0,0.0...	-	-	0/0

Description: This setting data has exactly the same effect as MD26018 $MC_NIBBLE_PRE_START_TIME. Its primary purpose is to allow the pre-start time to be altered from the NC program so that it can be adapted to different metal sheet sizes and thicknesses. However, the setting data is active only when the machine data has been set to zero.

Related to .... NIBBLE_PRESTART_TIME

42404	MINTIME_BETWEEN_STROKES			-	N4
s	Minimum time between 2 strokes in seconds			DOUBLE	Immediately
-					
802d-cu3	-	0.0,0.0,0.0,0.0,0.0,0.0,0.0,0.0,0.0,0.0...	-	-	3/3
802d-ng2	-	0.0,0.0,0.0,0.0,0.0,0.0,0.0,0.0,0.0,0.0...	-	-	3/3
802d-ng3	-	0.0,0.0,0.0,0.0,0.0,0.0,0.0,0.0,0.0,0.0...	-	-	3/3
802d-tm1	-	0.0,0.0,0.0,0.0,0.0,0.0,0.0,0.0,0.0,0.0...	-	-	0/0
802d-tm2	-	0.0,0.0,0.0,0.0,0.0,0.0,0.0,0.0,0.0,0.0...	-	-	0/0
802d-tm3	-	0.0,0.0,0.0,0.0,0.0,0.0,0.0,0.0,0.0,0.0...	-	-	0/0

Description: Minimum time between 2 strokes in seconds

42440	FRAME_OFFSET_INCR_PROG			-	K1,K2
-	Traversing from zero offset with incr. programming			BOOLEAN	Immediately
-					
-	-	TRUE,TRUE,TRUE,TRUE,TRUE,TRUE,TRUE,TRUE...	-	-	7/7

Description: 0: When incremental programming is used on an axis, only the programmed position delta is traversed after a frame change. Zero offsets in FRAMES are only traversed when an absolute position is specified.

1: When incremental programming is used on an axis, changes to zero offsets are traversed after a frame change (standard response up to software version 3).

Related to ....

SD42442 $SC_TOOL_OFFSET_INCR_PROG

42442	TOOL_OFFSET_INCR_PROG			-	W1,K1
-	Traversing from zero offset with incr. programming			BOOLEAN	Immediately
-					
-	-	TRUE,TRUE,TRUE,TRUE,TRUE,TRUE,TRUE,TRUE...	-	-	7/7

Description: 0: When incremental programming is used on an axis, only the programmed position delta is traversed after a frame change. Tool length offsets in FRAMES are only traversed when an absolute position is specified.

1: When incremental programming is used on an axis, changes to tool length offsets are traversed after a tool change (standard response up to SW version 3).

Related to ....

SD42440 $SC_FRAME_OFFSET_INCR_PROG

42444	TARGET_BLOCK_INCR_PROG			-	BA
-	Set down mode after search run with calculation			BOOLEAN	Immediately
-					
-	-	TRUE,TRUE,TRUE,TRUE,TRUE,TRUE,TRUE...	-	-	7/7

Description: If the first programming of an axis after "Search run with calculation to end of block" is incremental, the incremental value is added as a function of SD42444 $SC_TARGET_BLOCK_INCR_PROG to the value accumulated up to the search target :

SD = TRUE: Incremental value is added to accumulated position

SD = FALSE: Incremental value is added to current actual value

The setting data is evaluated on NC start for output of the action blocks.

42450	CONTPREC			-	B1,K6
mm	Contour accuracy			DOUBLE	Immediately
-					
802d-cu3	-	0.1,0.1,0.1,0.1,0.1,0.1,0.1,0.1,0.1,0.1...	0.000001	999999.	3/3
802d-ng2	-	0.1,0.1,0.1,0.1,0.1,0.1,0.1,0.1,0.1,0.1...	0.000001	999999.	0/0
802d-ng3	-	0.1,0.1,0.1,0.1,0.1,0.1,0.1,0.1,0.1,0.1...	0.000001	999999.	0/0
802d-tm1	-	0.1,0.1,0.1,0.1,0.1,0.1,0.1,0.1,0.1,0.1...	0.000001	999999.	0/0
802d-tm2	-	0.1,0.1,0.1,0.1,0.1,0.1,0.1,0.1,0.1,0.1...	0.000001	999999.	0/0
802d-tm3	-	0.1,0.1,0.1,0.1,0.1,0.1,0.1,0.1,0.1,0.1...	0.000001	999999.	0/0

Description: Contour accuracy. This setting data can be used to define the accuracy to be maintained for the path of the geometry axes on curved contours. The lower the value and the lower the servogain factor of the geometry axes, the greater the reduction of path feed on curved contours.

Related to ....

MD20470 $MC_CPREC_WITH_FFW

SD42460 $SC_MINFEED

42460	MINFEED			-	B1,K6
mm/min	Minimum path feedrate for CPRECON			DOUBLE	Immediately
-					
-	-	1.,1.,1.,1.,1.,1.,1.,1.,1.,1.,1.,1.,1....	0.000001	999999.	0/0

Description: Minimum path feedrate with the "Contour accuracy" function active. The feedrate is not limited to below this value unless a lower F value has been programmed or the axis dynamics do not permit it.

Related to ....

MD20470 $MC_CPREC_WITH_FFW

SD42450 $SC_CONTPREC

42466	SMOOTH_ORI_TOL			-	B1
degrees	Maximum deviation of tool orientation during smoothing.			DOUBLE	Immediately
-					
-	-	0.05,0.05,0.05,0.05,0.05,0.05,0.05...	0.000001	90.	0/0

Description: This setting data defines the maximum tool orientation tolerance during smoothing.

The data determines the maximum permissible
angular displacement of the tool orientation.
This data only applies if an orientation tranformation
is active.
Related to:
MD20480 $MC_SMOOTHING_MODE,
SD42465 $SC_SMOOTH_CONTUR_TOL

42470	CRIT_SPLINE_ANGLE			-	W1,PGA
degrees	Corner limit angle for compressor			DOUBLE	Immediately
-					
802d-cu3	-	36.0,36.0,36.0,36.0,36.0,36.0,36.0...	0.0	89.0	3/3
802d-ng2	-	36.0,36.0,36.0,36.0,36.0,36.0,36.0...	0.0	89.0	0/0
802d-ng3	-	36.0,36.0,36.0,36.0,36.0,36.0,36.0...	0.0	89.0	0/0
802d-tm1	-	36.0,36.0,36.0,36.0,36.0,36.0,36.0...	0.0	89.0	0/0
802d-tm2	-	36.0,36.0,36.0,36.0,36.0,36.0,36.0...	0.0	89.0	0/0
802d-tm3	-	36.0,36.0,36.0,36.0,36.0,36.0,36.0...	0.0	89.0	3/3

Description: The setting data defines the limit angle from which the compressor COMPCAD interprets a block transition as a corner. Practical values lie between 10 and 40 degrees. Values from 0 to 89 degrees inclusive are permitted.
The angle only serves as an approximate measure for corner detection. The compressor can also classify flatter block transitions as corners and eliminate larger angles as outliers on account of plausibility considerations.

42477	COMPRESS_ORI_ROT_TOL			-	F2,PGA
degrees	Maximum deviation of tool rotation with compressor			DOUBLE	Immediately
-					
-	-	0.05,0.05,0.05,0.05,0.05,0.05,0.05...	0.000001	90.	0/0

Description: This setting data defines the maximum tolerance in the compressor for turning the tool orientation. This data defines the maximum permissible angular displacement of the tool rotation.
This data is only active if an orientation transformation is active.
Turning the tool orientation is only possible with 6-axis machines.

42480	STOP_CUTCOM_STOPRE			-	W1
-	Alarm response with tool radius compensation and preproc. stop			BOOLEAN	Immediately
-					
-	-	TRUE,TRUE,TRUE,TRUE,TRUE,TRUE,TRUE...	-	-	3/3

Description: If this setting data is TRUE, block execution is stopped by preprocessing stop and active tool radius compensation, and does not resume until after a user acknowledgement (START).
If it is FALSE, machining is not interrupted at such a program point.

42490	CUTCOM_G40_STOPRE			-	W1
-	Retraction behavior of tool radius compensation with prep. stop			BOOLEAN	Immediately
-					
-	-	FALSE,FALSE,FALSE, FALSE,FALSE,FALSE.. -	-	-	3/3

Description:

FALSE:

If there is a preprocessing stop (either programmed or generated internally by the control) before the deselection block (G40) when tool radius compensation is active, then firstly the starting point of the deselection block is approached from the last end point before the preprocessing stop. The deselection block itself is then executed, i.e. the deselection block is usually replaced by two traversing blocks. Tool radius compensation is no longer active in these blocks. The behavior is thus identical with that before the introduction of this setting data.

TRUE:

If there is a preprocessing stop (either programmed or generated internally by the control) before the deselection block (G40) when tool radius compensation is active, the end point of the deselection point is traversed in a straight line from the last end point before the preprocessing stop.

42494	CUTCOM_ACT_DEACT_CTRL			-	W1
-	Approach & retraction behavior with 2-1/2D tool radius compens.			DWORD	Immediately
-					
-	-	2222,2222,2222,2222,2222,2222,2222...	-	-	3/3

Description:

This setting data controls the approach and retraction behavior with tool radius compensation if the activation or deactivation block does not contain any traversing information. It is only evaluated with 2-1/2D TRC (CUT2D or CUT2DF).

The decimal coding is as follows:

```
N N N N
|   |   |   |____  Approach behavior for tools with tool point direction
|   |   |           (turning tools)
|   |   |______ Approach behavior for tools without tool point direction
|   |            (milling tools)
|   |________  Retract behavior for tools with tool point direction
|               (turning tools)
|___________   Retract behavior for tools without tool point direction
             (milling tools)
```

If the position in question contains a 1, approach or retraction is always performed, even if G41/G42 or G40 stands alone in a block.

For example:

```
N100 x10 y0
N110 G41
N120 x20
```

If a tool radius of 10mm is assumed in the above example, position x10y10 is approached in block N110.

If the position in question contains the value 2, the approach or retraction movement is only performed if at least one geometry axis is programmed in the activation/deactivation block. To obtain the same results as the above example with this setting, the program must be altered as follows:

```
N100 x10 y0
N110 G41 x10
N120 x20
```

If axis information x10 is missing in block N110, activation of TRC is delayed by one block, i.e. the activation block would now be N120.

If the position in question contains a 3, retraction is not performed in a deactivation block (G40) if only the geometry axis perpendicular to the compensation plane is programmed. In this case, the motion perpendicular to the compensation plane is performed first. This is followed by the retraction motion in the compensation plane. In this case, the block after G40 must contain motion information in the compensation plane. The approach motions for values 2 and 3 are identical.

If the position in question contains a value other than 1, 2 or 3, i.e. in particular the value 0, an approach or retraction movement is not performed in a block that does not contain any traversing information.

About the term "Tools with tool point direction":

These are tools with tool numbers between 400 and 599 (turning and grinding tools), whose tool point direction has a value between 1 and 8. Turning and grinding tools with tool point direction 0 or 9 or other undefined values are treated like milling tools.

Note:

If the value of this setting data is changed within a program, we recommend programming a preprocessing stop (stopre) before the description to avoid the new value being used in program sections before that point. The opposite case is not serious, i.e. if the setting data is written, subsequent NC blocks will definitely access the new value.

42496	CUTCOM_CLSD_CONT		-		-
-	Tool radius compensation behavior with closed contour		BOOLEAN		Immediately
-					
-	-	FALSE,FALSE,FALSE,FALSE,FALSE,FALSE.. -	-	-	3/3

Description:

FALSE:

If two intersections are created on correction of the inner side of an (almost) closed contour consisting of two successive circle blocks or a circle and a linear block, the intersection that lies on the first part contour nearer to the block end will be selected as per the default behavior.

A contour will be considered as (almost) closed if the distance between the starting point of the first block and the end point of the second block is smaller than 10% of the active compensation radius, but not larger than 1000 path increments (corresponds to 1mm to 3 decimal places).

TRUE:

Under the same condition as described above, the intersection that lies on the first part contour nearer to block start is selected.

42500	SD_MAX_PATH_ACCEL			-	B2
m/s²	maximum path acceleration			DOUBLE	Immediately
-					
802d-cu3	-	10000.,10000.,10000.,10000.,10000.,10000....	1.0e-3	-	3/3
802d-ng2	-	10000.,10000.,10000.,10000.,10000.,10000....	1.0e-3	-	1/1
802d-ng3	-	10000.,10000.,10000.,10000.,10000.,10000....	1.0e-3	-	1/1
802d-tm1	-	10000.,10000.,10000.,10000.,10000.,10000....	1.0e-3	-	1/1
802d-tm2	-	10000.,10000.,10000.,10000.,10000.,10000....	1.0e-3	-	1/1
802d-tm3	-	10000.,10000.,10000.,10000.,10000.,10000....	1.0e-3	-	3/3

Description: Setting data for additional limitation of (tangential) path acceleration
Related to ...
MD32300 $MA_MAX_AX_ACCEL
SD42502 $SC_IS_SD_MAX_PATH_ACCEL

42502	IS_SD_MAX_PATH_ACCEL			-	B2
-	Evaluate SD42500 SC_SD_MAX_PATH_ACCEL			BOOLEAN	Immediately
-					
802d-cu3	-	FALSE,FALSE,FALSE,FALSE,FALSE,FALSE...	-	-	3/3
802d-ng2	-	FALSE,FALSE,FALSE,FALSE,FALSE,FALSE...	-	-	1/1
802d-ng3	-	FALSE,FALSE,FALSE,FALSE,FALSE,FALSE...	-	-	1/1
802d-tm1	-	FALSE,FALSE,FALSE,FALSE,FALSE,FALSE...	-	-	1/1
802d-tm2	-	FALSE,FALSE,FALSE,FALSE,FALSE,FALSE...	-	-	1/1
802d-tm3	-	FALSE,FALSE,FALSE,FALSE,FALSE,FALSE...	-	-	3/3

Description: SD42500 $SC_SD_MAX_PATH_ACCEL is included in the limit calculations if SD42502 $SC_IS_SD_MAX_PATH_ACCEL=TRUE
Related to ...
SD42500 $SC_SD_MAX_PATH_ACCEL

42510	SD_MAX_PATH_JERK			-	B2
m/s³	maximum path-related jerk as setting data			DOUBLE	Immediately
-					
802d-cu3	-	100000.,100000.,100000.,100000....	1.e-9	-	3/3
802d-ng2	-	100000.,100000.,100000.,100000....	1.e-9	-	1/1
802d-ng3	-	100000.,100000.,100000.,100000....	1.e-9	-	1/1
802d-tm1	-	100000.,100000.,100000.,100000....	1.e-9	-	1/1
802d-tm2	-	100000.,100000.,100000.,100000....	1.e-9	-	1/1
802d-tm3	-	100000.,100000.,100000.,100000....	1.e-9	-	3/3

Description: As well as MD20600 $MC_MAX_PATH_JERK, the maximum path-related jerk can also limit the jerk.

Related to ...

MD20600 $MC_MAX_PATH_JERK

SD42512 $SC_IS_SD_MAX_PATH_JERK

42512	IS_SD_MAX_PATH_JERK			-	B2
-	Evaluate SD42510 SD_MAX_PATH_JERK			BOOLEAN	Immediately
-					
802d-cu3	-	FALSE,FALSE,FALSE,FALSE,FALSE,FALSE....	-	-	3/3
802d-ng2	-	FALSE,FALSE,FALSE,FALSE,FALSE,FALSE....	-	-	1/1
802d-ng3	-	FALSE,FALSE,FALSE,FALSE,FALSE,FALSE....	-	-	1/1
802d-tm1	-	FALSE,FALSE,FALSE,FALSE,FALSE,FALSE....	-	-	1/1
802d-tm2	-	FALSE,FALSE,FALSE,FALSE,FALSE,FALSE....	-	-	1/1
802d-tm3	-	FALSE,FALSE,FALSE,FALSE,FALSE,FALSE....	-	-	3/3

Description: SD42510 $SC_SD_MAX_PATH_JERK is included in the limit calculations if SD42512 $SC_IS_SD_MAX_PATH_JERK=TRUE

Related to ...

SD42510 $SC_SD_MAX_PATH_JERK (SD for additional limitation of (tangential) path jerk)

42520	CORNER_SLOWDOWN_START			-	-
mm	Start of feed reduction at G62.			DOUBLE	Immediately
-					
802d-cu3	-	0.,0.,0.,

42526	CORNER_SLOWDOWN_CRIT			-	-
degrees	Corner detection at G62			DOUBLE	Immediately
-					
802d-cu3	-	0.,0.,0.,0.,0.,0.,0.,0.,0.,0.,0.,0.,0....	-	-	3/3
802d-ng2	-	0.,0.,0.,0.,0.,0.,0.,0.,0.,0.,0.,0.,0....	-	-	1/1
802d-ng3	-	0.,0.,0.,0.,0.,0.,0.,0.,0.,0.,0.,0.,0....	-	-	1/1
802d-tm1	-	0.,0.,0.,0.,0.,0.,0.,0.,0.,0.,0.,0.,0....	-	-	1/1
802d-tm2	-	0.,0.,0.,0.,0.,0.,0.,0.,0.,0.,0.,0.,0....	-	-	1/1
802d-tm3	-	0.,0.,0.,0.,0.,0.,0.,0.,0.,0.,0.,0.,0....	-	-	3/3

Description: Angle from which a corner is taken into account when reducing the feed with G62.

For example SD42526 $SC_CORNER_SLOWDOWN_CRIT = 90 means that all corners of 90 degrees or a more acute angle are traversed slower with G62.

42528	CUTCOM_DECEL_LIMIT			-	-
-	Feed lowering on circles with tool radius compensation			DOUBLE	Immediately
-					
802d-cu3	-	0.,0.,0.,0.,0.,0.,0.,0.,0.,0.,0.,0.,0....	0.	1.	3/3
802d-ng2	-	0.,0.,0.,0.,0.,0.,0.,0.,0.,0.,0.,0.,0....	0.	1.	1/1
802d-ng3	-	0.,0.,0.,0.,0.,0.,0.,0.,0.,0.,0.,0.,0....	0.	1.	1/1
802d-tm1	-	0.,0.,0.,0.,0.,0.,0.,0.,0.,0.,0.,0.,0....	0.	1.	1/1
802d-tm2	-	0.,0.,0.,0.,0.,0.,0.,0.,0.,0.,0.,0.,0....	0.	1.	1/1
802d-tm3	-	0.,0.,0.,0.,0.,0.,0.,0.,0.,0.,0.,0.,0....	0.	1.	3/3

Description: The setting data limits feed lowering of the tool center point on concave circle segments with tool radius compensation active and CFC or CFIN selected.

With CFC, the feed is defined at the contour. On concave circular arcs, feed lowering of the tool center point is created by the ratio of the contour curvature to the tool center point path curvature. The setting data is limiting this effect, reducing backing off and overheating of the tool.

For contours with varying curvatures, a mid-range curvature is used.

0: Provides the previous behavior: If the ratio between contour radius and tool center point path radius is less than or equal to 0.01 the feed is applied to the tool center point path. Less pronounced feed reductions are executed.

>0: Feed lowering is limited to the programmed factor. At 0.01, this means that the feed of the tool center point path is possibly only 1 percent of the programmed feed value.

1: On concave contours, the tool center point feed equals the programmed feed (the behavior then corresponds to CFTCP).

42600	JOG_FEED_PER_REV_SOURCE		-	V1
-	Control revolutional feedrate in JOG		DWORD	Immediately
-				
-	-	0,0,0,0,0,0,0,0,0,0,0,0,0,0,0,0	-3	31	1/1

Description: The revolutional feedrate in JOG mode for geometry axes on which a frame with rotation acts.

0= No revolutional feedrate is active.

>0= Machine axis index of the rotary axis/spindle from which the revolutional feedrate is derived.

-1= The revolutional feedrate is derived from the master spindle of the channel in which the axis/spindle is active.

-2= The revolutional feedrate is derived from the axis with machine axis index == 0.

-3= The revolutional feedrate is derived from the master spindle of the channel in which the axis/spindle is active. No revolutional feedrate is active if the master spindle is at a standstill.

Related to ....

SD43300: $SA_ASSIGN_FEED_PER_REV_SOURCE (revolutional feedrate for position axes/spindles)

42660	ORI_JOG_MODE		-	-
-	Definition of virtual kinematics for JOG		DWORD	Immediately
-				
-	-	0,0,0,0,0,0,0,0,0,0,0,0,0,0,0,0	0	5	0/0

Description: This SD can be used to define virtual kinematics, which become active for the manual travel of orientations.

This setting data is evaluated only by the generic 5/6-axis transformation. This data has no meaning for OEM transformations.

The following setting options are available:

0: The virtual kinematics are defined by the transformation.

1: Euler angles are traversed during jog, that is the 1st axis turns round the Z direction, the 2nd axis turns around the X direction and, if present, the 3rd axis turns aound the new Z direction.

2: RPY angles are traversed during jog with the turning sequence XYZ, that is the 1st axis turns around the x direction, the 2nd axis turns around the Y direction and, if present, the 3rd axis turns around the new Z direction.

3: RPY angles are traversed during jog with the turning sequence ZYX, that is the 1st axis turns around the Z direction, the 2nd axis turns around the Y direction and, if present, the 3rd axis turns around the new X direction.

4: The turning sequence of the rotary axes is set by means of MD21120 $MC_ORIAX_TURN_TAB_1.

5: The turning sequence of the rotary axes is set by means of MD21130 $MC_ORIAX_TURN_TAB_2.

42690	JOG_CIRCLE_CENTRE			-	-
mm	Center of the circle			DOUBLE	Immediately
-					
-	3	0, 0, 0,0, 0, 0,0, 0, 0,0, 0, 0...	-	-	7/7

Description: This setting data is used to define the circle center point in the workpiece coordinate system during JOG of circles.

Only the relevant center point coordinates of the geometry axes in the active plane are evaluated, not the coordinate of the geometry axis vertical to the plane. This setting data is written via the user interface.

By default the coordinate of an axis with diameter programming is in the diameter. This can be changed with MD20360 $MC_TOOL_PARAMETER_DEF_MASK Bit 13 = 1 by indicating a radius.

42691	JOG_CIRCLE_RADIUS			-	-
mm	Circle radius			DOUBLE	Immediately
-					
-	-	0,0,0,0,0,0,0,0,0,0,0,0,0,0,0,0	-	-	7/7

Description: With this setting data, the circle radius in the WCS, the maximum circle during inner machining or the minimum circle during outer machining are defined when jogging circles. This setting data is written via the user interface.

42692	JOG_CIRCLE_MODE			-	-
-	JOG of circles mode			DWORD	Immediately
-					
-	-	0,0,0,0,0,0,0,0,0,0,0,0,0,0,0,0		0xf	7/7

Description: This setting data sets the following during JOG of circles:

Bit 0 = 0 :

Travel to + creates traversing on a circular path in counterclockwise direction; travel to - creates traversing in clockwise direction.

Bit 0 = 1 :

Travel to + creates traversing on a circular path in clockwise direction; travel to - creates traversing in counterclockwise direction.

Bit 1 = 0 :

The tool radius is not taken into account in checking the limitation produced by the specified circle or by the circle segment limited by the start and end angles.

Bit 1 = 1 :

The tool radius is taken into account in checking the limitation produced by the specified circle or by the circle segment limited by the start and end angles.

Bit 2 = 0 :

Internal machining is performed. The circle radius in SD42691 $SC_JOG_CIRCLE_RADIUS is the maximum possible radius.

Bit 2 = 1 :

External machining is performed. The circle radius in SD42691 $SC_JOG_CIRCLE_RADIUS is the minimum possible radius.

Bit 3 = 0 :

Given a full circle, the radius is enlarged starting from the circle center point in the direction of the ordinate (2nd geometry axis) of the plane.

Bit 3 = 1 :

Given a full circle, the radius is enlarged starting from the circle center point in the direction of the abscissa (1st geometry axis) of the plane.

This setting data should be written via the user interface.

42693	JOG_CIRCLE_START_ANGLE			-	-
degrees	Circle start angle			DOUBLE	Immediately
-					
-	-	0,0,0,

The wear values are not mirrored. If the wear values are to be mirrored too, SD42910 $SC_MIRROR_TOOL_WEAR must be set.

FALSE:

The sign for tool length components is unaffected by whether a frame with mirror image machining is active.

42910	MIRROR_TOOL_WEAR			-	W1
-	Sign change of tool wear with mirror image machining			BOOLEAN	Immediately
-					
-	-	FALSE,FALSE,FALSE, FALSE,FALSE,FALSE...	-	-	0/0

Description:

TRUE:

If a frame with mirror image machining is activated, the signs of the wear values of the components in question are inverted. The wear values of the components that are not assigned to mirrored axes remain unchanged.

FALSE:

The signs for wear values are unaffected by whether a frame with mirror image machining is active.

42920	WEAR_SIGN_CUTPOS			-	W1
-	Sign of tool wear depending on tool point direction			BOOLEAN	Immediately
-					
-	-	FALSE,FALSE,FALSE, FALSE,FALSE,FALSE...	-	-	0/0

Description:

TRUE:

In the case of tools with a relevant tool point direction (turning and grinding tools), the sign for wear of the tool length components depends on the tool point direction.

The sign is inverted in the following cases (marked with an X):

Tool point direction	Length 1	Length 2
1		
2	X	
3	X	X
4		X
5		
6		
7	X	
8		X
9		

The sign for wear value of length 3 is not influenced by this setting data.

The SD42930 $SC_WEAR_SIGN acts in addition to this setting data.

FALSE:

The sign for wear of the tool length components is unaffected by the tool point direction.

42930	WEAR_SIGN		-	W1
-	Sign of wear		BOOLEAN	Immediately
-				
-	-	FALSE,FALSE,FALSE, FALSE,FALSE,FALSE.. -	-	0/0

Description: TRUE:

The sign for wear of the tool length components and the tool radius are inverted, i.e. if a positive value in entered, the total dimension is decreased.

FALSE:

The sign for wear of the tool length components and the tool radius is not inverted.

42935	WEAR_TRANSFORM		-	W1,W4
-	Transformations for tool components		DWORD	Immediately
-				
-	-	0,0,0,0,0,0,0,0,0,0,0,0,0,0,0,0	-	0/0

Description: This setting data is bit-coded.

It determines which of the three wear components

wear

($TC_DP12 - $TC_DP14),

additive offsets fine ($TC_SCPx3 - $TC_SCPx5),

and additive offsets coarse ($TC_ECPx3 - $TC_ECPx5)

are subject to adapter transformation and transformation by an orientable tool holder, if one of the two G codes TOWMCS or TOWWCS from G code group 56 is active. If initial-setting G code TOWSTD is active, this setting data will not become active.

Then, the following assignment is valid:

Bit 0 = TRUE: Do not apply transformations to $TC_DP12 - $TC_DP14.

Bit 1 = TRUE: Do not apply transformations to $TC_SCPx3 - $TC_SCPx5.

Bit 2 = TRUE: Do not apply transformations to $TC_ECPx3 - $TC_ECPx5.

The bits not mentioned here are (currently) not assigned.

42940	TOOL_LENGTH_CONST		-	W1
-	Change of tool length components with change of active plane		DWORD	Immediately
-				
-	-	0,0,0,0,0,0,0,0,0,0,0,0,0,0,0,0	-	3/3

Description: If this setting data is not equal to 0, the assignment of tool length components (length, wear, base dimensions) to geometry axes is not changed when the machining plane (G17 - G19) is changed.

The assignment of tool length components to geometry axes can be derived from the value of the setting data acc. to the following tables.

A distinction is made between turning and grinding tools (tool types 400 to 599) and other tools (typically milling tools) in the assignment.

Representation of this information in tables assumes that geometry axes 1 to 3 are called X, Y and Z. For assignment of an offset to an axis, not the axis identifier but the axis sequence is relevant.

Assignment for turning tools and grinding tools (tool types 400 to 599):

Content	Length 1	Length 2	Length 3
17	Y	X	Z
18*	X	Z	Y
19	Z	Y	X
-17	X	Y	Z
-18	Z	X	Y
-19	Y	Z	X

* Any value which is not 0 and is not one of the six values listed, is treated as value 18.

For values that are the same but with a different sign, assignment of length 3 is always the same, lengths 1 and 2 are reversed. Assignment for all tools which are neither turning nor grinding tools (tool types < 400 or > 599):

Content	Length 1	Length 2	Length 3
17*	Z	Y	X
18	Y	X	Z
19	X	Z	Y
-17	Z	X	Y
-18	Y	Z	X
-19	X	Y	Z

* Any value which is not 0 and is not one of the six values listed, is treated as value 17.

For values that are the same but with a different sign, assignment of length 1 is always the same, lengths 2 and 3 are reversed.

42950	TOOL_LENGTH_TYPE		-	W1
-	Assignment of tool length compensation independent of tool type		DWORD	Immediately
-				
-	-	0,0,0,0,0,0,0,0,0,0,0,0,0,0,0,0	-	3/3

Description:

This setting data defines the assignment of the tool length components to the geometry axes independently of the tool type. It can assume any value between 0 and 2. Any other value is interpreted as 0.

Value

0: Standard assignment. A distinction is made between turning and grinding tools (tool types 400 to 599) and other tools (milling tools).

1: The assignment of the tool length components is independent of the actual tool type, always as for milling tools.

2. The assignment of the tool length components is independent of the actual tool type, always as for turning tools.

The setting data also affects the wear values assigned to the length components.

If SD42940 $SC_TOOL_LENGTH_CONST is set, the tables defined there access the table for milling and turning tools defined by SD42950 $SC_TOOL_LENGTH_TYPE irrespective of the actual tool type, if the value of the table is not equal to 0.

42960	TOOL_TEMP_COMP			-	W1
-	Temperature compensation for tool			DOUBLE	Immediately
-					
-	3	0.0, 0.0, 0.0,0.0, 0.0, 0.0...	-	-	0/0

Description: Temperature compensation value for the tool. The compensation value acts as vector according to the current rotation of the tool direction.

This setting data will only be evaluated, if temperature compensation has been activated for tools with MD20390 $MC_TOOL_TEMP_COMP_ON.

Apart from that, the temperature compensation type must be set in bit 2 for the "Compensation in tool direction" MD32750 $MA_TEP_COMP_TYPE.

The "Temperature compensation" is an option that has to be previously enabled.

42974	TOCARR_FINE_CORRECTION			C08	-
-	Fine offset TCARR ON / OFF			BOOLEAN	Immediately
-					
-	-	FALSE,FALSE,FALSE, FALSE,FALSE,FALSE.. -	-	-	0/0

Description: TRUE:

On activating an orientable tool holder, the fine offset values are considered.

FALSE:

On activating an orientable tool holder, the fine offset are not considered.

42980	TOFRAME_MODE			-	K2
-	Frame definition at TOFRAME, TOROT and PAROT			DWORD	Immediately
-					
-	-	1000,1000,1000,1000,1000,1000,1000...	-	-	0/0

Description: This setting data defines the direction of the X or Y axis in the case of frame definition by means of TOFRAME, TOROT or PAROT.

In the case of these frame definitions, the Z direction is uniquely defined, the rotation around the Z axis is free at first.

This free rotation can be defined by this setting data so that the newly defined frame deviates as little as possible from a previously active frame. In all cases in which the setting data is not zero, an active frame remains unchanged if the Z directions of the old and the new frame are the same.

0: The orientation of the coordinate system is determined by the value of the machine data MD21110 $MC_X_AXIS_IN_OLD_X_Z_PLANE.

1: The new X direction is selected so that it lies in the X-Z plane of the old coordinate system. The angular difference between the old and new Y axes is minimal with this setting.

2: The new Y direction is selected so that it lies in the Y-Z plane of the old coordinate system. The angular difference between the old and new X axes is minimal with this setting.

3: The average of the two settings resulting from 1 and 2 is selected.

Addition of 100:

In the case of a plane change from G17 to G18 or G19, a tool matrix is generated, in which the new axis directions are parallel to the old directions. The axes are correspondingly swapped cyclically (standard transformation with plane changes). If the hundreds digit equals zero, a matrix is supplied in the cases of G18 and G19 which is derived from the unit matrix by simply rotating through 90 degrees around the X axis (G18) or through 90 degrees around the Y axis (G19). Thus in each case one axis is antiparallel to an initial axis. This setting is required to remain compatible with old software versions.

Addition of 1000:

The tool-frame is linked to any active basic frames and settable frames. The response is thus compatible with earlier software versions (before 5.3). If the thousands digit is not set, the tool frame is calculated so that any active basic frames and settable frames are taken into account.

Addition of 2000:

The tool frame is still correctly formed if the frames in the frame chain after the TOOLFRAME contain any values (rotations and translations). This mode is only possible if the system frame for the tool frame is present. MD21110 $MC_X_AXIS_IN_OLD_X_Z_PLANE is no longer evaluated. All values in the units digit of this setting data that are not equal to 1 or 2 are handled as if the value was three. In particular, the behavior with 2000 is identical to that with 2003. TOFRAME sets the zero point of the workpiece coordinate system to the current position.

42984	CUTDIRMOD			C08	-
-	Modification of $P_AD[2] or $P_AD[11]			STRING	Immediately
-					
802d-cu3	-		-	-	1/1
802d-ng2	-		-	-	0/0
802d-ng3	-		-	-	0/0
802d-tm1	-		-	-	0/0
802d-tm2	-		-	-	0/0
802d-tm3	-		-	-	1/1

Description: States whether the tool point direction and cutting direction are to be modified on reading the corresponding system variables $P_AD[2] and $P_AD[11].

Modification is made by rotating the vector of the tool point direction or cutting direction by a specific angle in the active machining plane (G17-G19). The resulting output value is always the tool point direction or cutting direction created by the rotation or to which the rotated value is closest. the angle of rotation can be defined by one of the following six options:

1: The string is empty. The stated data are output unchanged.

2: The contents of the string is "P_TOTFRAME". The resulting rotation is determined from the total frame.

3: The contents of the string is a valid frame name (e.g. $P_NCBFRAME[3]). The resulting rotation is then calculated from this frame.

4: The contents of the string has the form "Frame1 : Frame2". The resulting rotation is determined from the part frame chain that is created by chaining all frames from Frame1 to Frame2 (in each case inclusive). Frame1 and Frame2 are valid frame names such as $P_PFRAME or $P_CHBFRAME[5]"

5: The contents of the frame is the valid name of a rotary axis (machine axis). The resulting rotation is determined from the programmed end position of this rotary axis. Additionally, an offset can be stated (in degrees, e.g. "A+90).

6: The rotation is programmed explicitly (in degrees).

Optionally, the first character of the string can be written as sign (+ or -). A plus sign will not have any effect on the angle calculation, but a minus sign will invert the sign of the calculated angle.

42990	MAX_BLOCKS_IN_IPOBUFFER			-	K1
-	maximum number of blocks in IPO buffer			DWORD	Immediately
-					
802d-cu3	-	-1,-1,-1,-1,-1,-1,-1,-1,-1,-1,-1,-1,-1...	-	-	2/2
802d-ng2	-	-1,-1,-1,-1,-1,-1,-1,-1,-1,-1,-1,-1,-1...	-	-	1/1
802d-ng3	-	-1,-1,-1,-1,-1,-1,-1,-1,-1,-1,-1,-1,-1...	-	-	2/2
802d-tm1	-	-1,-1,-1,-1,-1,-1,-1,-1,-1,-1,-1,-1,-1...	-	-	1/1
802d-tm2	-	-1,-1,-1,-1,-1,-1,-1,-1,-1,-1,-1,-1,-1...	-	-	1/1
802d-tm3	-	-1,-1,-1,-1,-1,-1,-1,-1,-1,-1,-1,-1,-1...	-	-	2/2

Description: This setting data can be used to limit the maximum number of blocks in the interpolation buffer to the maximum number specified in MD28060 $MC_MM_IPO_BUFFER_SIZE.

A negative value means that no limitation of the number of blocks is active in the interpolation buffer, and the number of blocks is determined solely by MD28060 $MC_MM_IPO_BUFFER_SIZE (default setting).

42995	CONE_ANGLE			-	-
-	Taper angle			DOUBLE	Immediately
-					
-	-	0,0,0,0,0,0,0,0,0,0,0,0,0,0,0,0	-90	90	7/7

Description: This setting data writes the taper angle for taper turning. This setting data is written via the operator interface.

42996	JOG_GEOAX_MODE_MASK			-	-
-	JOG of geometry axis mode			DWORD	Immediately
-					
-	-	0,0,0,0,0,0,0,0,0,0,0,0,0,0,0,0	0	0x7	7/7

Description: This setting data sets the following during JOG of geometry axes:

Bit 0 = 1 :

A traversing request for the 1st geometry axis is inverted, i.e. a traversing request to + triggers a traversing motion to - .

Bit 1 = 1 :

A traversing request for the 2nd geometry axis is inverted, i.e. a traversing request to + triggers a traversing motion to -.

Bit 2 = 1:

A traversing request for the 3rd geometry axis is inverted, i.e. a traversing request to + triggers a traversing motion to -.

3.1.3 Axis specific setting data

43120	DEFAULT_SCALE_FACTOR_AXIS			-	FBFA
-	Axial default scaling factor with G51 active			DWORD	Immediately
-					
802d-cu3	-	1	-	-	7/7
802d-ng2	-	1	-	-	0/0
802d-ng3	-	1	-	-	0/0
802d-tm1	-	1	-	-	7/7
802d-tm2	-	1	-	-	7/7
802d-tm3	-	1	-	-	7/7

Description: If no axial scaling factor I, J, or K is programmed in the G51 block, SD43120 $SA_DEFAULT_SCALE_FACTOR_AXIS is active. The scaling factor is only active if MD22914 $MC_AXES_SCALE_ENABLE is set.

Related to:

MD22914 $MC_AXES_SCALE_ENABLE,

MD22910 $MC_WEIGHTING_FACTOR_FOR_SCALE

43200	SPIND_S			-	S1
rev/min	Speed for spindle start by VDI			DOUBLE	Immediately
-					
-	-	0.0	-	-	7/7

Description: Spindle speed at spindle start by NC/PLC interface signals V380x 5006.1 (Spindle start clockwise rotation) and V380x 5006.2 (Spindle start counter-clockwise rotation).

Example: $SA_SPIND_S[S1] = 600

Spindle 1 is started at a speed of 600 rpm upon detection of the positive edge of one of the above-mentioned VDI starting signals.

Speed programming values are entered in the SD by setting bit 4=1 in MD35035 $MA_SPIND_FUNCTION_MASK.

The SD becomes active in JOG mode as a default speed by setting bit 5=1 in MD35035 $MA_SPIND_FUNCTION_MASK (exception: the value is zero).

Related to:

MD35035 $MA_SPIND_FUNCTION_MASK

MD10709 $MN_PROG_SD_POWERON_INIT_TAB

MD10710 $MN_PROG_SD_RESET_SAVE_TAB

43202	SPIND_CONSTCUT_S			-	S1
m/min	Const cut speed for spindle start by VDI			DOUBLE	Immediately
-					
-	-	0.0	-	-	7/7

Description: Definition of the constant cutting speed for the master spindle.

The setting data is evaluated at spindle start by the NC/PLC interface signals V380x 5006.1 (Spindle start clockwise rotation) and V380x 5006.2 (Spindle start counterclockwise rotation).

Cutting speed programming values are entered in the SD by setting bit 8=1 in MD35035 $MA_SPIND_FUNCTION_MASK.

Related to:

MD35035 $MA_SPIND_FUNCTION_MASK

MD10709 $MN_PROG_SD_POWERON_INIT_TAB

MD10710 $MN_PROG_SD_RESET_SAVE_TAB

43206	SPIND_SPEED_TYPE			A06	-
-	Spindle speed type for spindle start through VDI			DWORD	Immediately
-					
-	-	94	93	972	7/7

Description: Definition of the spindle speed type for the master spindle.

The range of values and the functionality correspond to the 15th G group "feed type".

Permissible values are the G values: 93, 94, 95, 96, 961, 97, and 971.

The stated values make a functional distinction between the following variants:

==> 93, 94, 95, 97 and 971: The spindle is started at the speed in SD 43200 $SA_SPIND_S.

==> 96 and 961: The speed of the spindle is derived from the cutting speed of SD 43202 $SA_SPIND_CONSTCUT_S and the radius of the transverse axis.

The default value is 94 (corresponds to G94).

The default value becomes active if the SD is written with impermissible values.

43210	SPIND_MIN_VELO_G25			-	S1
rev/min	Programmed spindle speed limitation G25			DOUBLE	Immediately
-					
-	-	0.0	-	-	7/7

Description: A minimum spindle speed limit below which the spindle must not fall is entered in SPIND_MIN_VELO_G25. The NCK limits the set spindle speed to this value if it is too low.

The spindle speed may only fall below the minimum as a result of:

- Spindle offset 0%
- M5
- S0
- NC/PLC interface signal V380x 0004.3 (Spindle stop)
- NC/PLC interface signal V380x 0002.1 (Servo enable)
- NC/PLC interface signal V3300 0003.7 (Channel status: Reset)
- NC/PLC interface signal V380x 0002.2 (Delete distance-to-go/Spindle reset)
- NC/PLC interface signal V380x 2002.5 (Oscillation speed)
- Cancel S value

Related to:

MD10709 $MN_PROG_SD_POWERON_INIT_TAB
MD10710 $MN_PROG_SD_RESET_SAVE_TAB

43220	SPIND_MAX_VELO_G26			-	S1
rev/min	Programmable upper spindle speed limitation G26			DOUBLE	Immediately
-					
-	-	1000.0	-	-	7/7

Description: A maximum spindle speed is entered in SD43220 $SA_SPIND_MAX_VELO_G26, which the spindle must not exceed. The NCK limits an excessive spindle speed setpoint to this value.

SD irrelevant for ......

all spindle modes except open-loop control mode.

Special cases, errors, ...

The value in SD43210 $SA_SPIND_MIN_VELO_G26 can be altered by means of:

- G26 S.... in the part program
- Operator commands via HMI

The value in SD43210 $SA_SPIND_MIN_VELO_G26 is retained after a reset or Power Off.

Related to ....

SD43210 $SA_SPIND_MIN_VELO_G25 (programmed spindle speed limit G25)

SD43230 $SA_SPIND_MAX_VELO_LIMS (programmed spindle speed limit G96/961)

MD10709 $MN_PROG_SD_POWERON_INIT_TAB

MD10710 $MN_PROG_SD_RESET_SAVE_TAB

43230	SPIND_MAX_VELO_LIMS			-	S1,Z1
rev/min	Spindle speed limitation with G96			DOUBLE	Immediately
-					
-	-	100.0	-	-	7/7

Description: At a constant cutting rate (G96 and G97), an extra limitation entered in SPIND_MAX_VELO_LIMS is operative in addition to the continually applied limits. Furthermore, this can be described in SPIND_MAX_VELO_LIMS in the part program with LIMS=....

Note:

MD 10710 $MN_PROG_SD_RESET_SAVE_TAB can be set so that the value written by the part program is transferred into the active file system on reset (that is the value is retained after reset).

Related to ....

SD43210 $SA_SPIND_MIN_VELO_G25 (programmed spindle speed limit G25)

SD43230 $SA_SPIND_MAX_VELO_LIMS (programmed spindle speed limit with G96/961)

MD10709 $MN_PROG_SD_POWERON_INIT_TAB

MD10710 $MN_PROG_SD_RESET_SAVE_TAB

43240	M19_SPOS			-, A12	S1
degrees	Spindle position for spindle positioning with M19.			DOUBLE	Immediately
-					
-	-	0.0	-10000000.0	10000000.0	7/7

Description: Spindle position in [DEGREES] for spindle positioning with M19.

The position approach mode is defined in $SA_M19_SPOSMODE.

Default positions must lie in the range 0 <= pos < MD30330 $MA_MODULO_RANGE.

Path defaults (SD43250 $SA_M19_SPOSMODE = 2) can be positive or negative and are only limited by the input format.

43250	M19_SPOSMODE			-, A12	S1
-	Spindle position approach mode for spindle positioning with M19.			DWORD	Immediately
-					
-	-	0	0	5	7/7

Description: Spindle position approach mode for spindle positioning with M19.

In which signify:

0: DC (default) approach position on the shortest path.

1: AC approach position normally.

2: IC approach incrementally (as path), sign gives the traversing direction

3: DC approach position on the shortest path.

4: ACP approach position from the positive direction.

5: ACN approach position from the negative direction.

43300	ASSIGN_FEED_PER_REV_SOURCE			-	V1,P2,S1
-	Revolutional feedrate for positioning axes/spindles			DWORD	Immediately
CTEQ					
-	-	0	-3	31	1/1

Description:

0= No revolutional feedrate is active.

>0= Machine axis index of the rotary axis/spindle, from which the revolutional feedrate is derived.

-1= The revolutional feedrate is derived from the master spindle of the channel in which the axis/spindle is active

-2= The revolutional feedrate is derived from the axis with machine axis index == 0 or the axis with an index in MD10002 $MN_AXCONF_LOGIC_MACHAX_TAB == 0.

-3= The revolutional feedrate is derived from the master spindle of the channel in which the axis/spindle is active. No revolutional feedrate is active if the master spindle is at a standstill.

Related to ....

SD42600 $SC_JOG_FEED_PER_REV_SOURCE (revolutional feedrate for geometry axes on which a frame with rotation acts in JOG mode.)

MD10709 $MN_PROG_SD_POWERON_INIT_TAB

MD10710 $MN_PROG_SD_RESET_SAVE_TAB

43320	JOG_POSITION			-	-
mm, degrees	JOG position			DOUBLE	Immediately
-					
-	-	0.0	-	-	7/7

Description:

Position to be approached in JOG. Depending on MD10735 $MN_JOG_MODE_MASK bit 4 axial frames and, with an axis configured as geometry axis, the tool length offset are considered.

43340	EXTERN_REF_POSITION_G30_1			-, A12	FBFA
-	Reference point position for G30.1			DOUBLE	Immediately
-					
-	-	0.0	-	-	7/7

Description:

Reference point position for G30.1.

This setting data will be evaluated in CYCLE328.

43400	WORKAREA_PLUS_ENABLE			-	A3
-	Working area limitation active in positive direction			BOOLEAN	Immediately
CTEQ					
-	-	FALSE	-	-	7/7

Description:

1: The working area limitation of the axis concerned is active in the positive direction.

0: The working area limitation of the axis concerned is switched off in the positive direction.

The setting data is parameterized via the operator panel in the operating area "Parameters" by activating/deactivating the working area limitation.

SD irrelevant for ......

G code: WALIMOF

43410	WORKAREA_MINUS_ENABLE			-	A3
-	Working area limitation active in the negative direction			BOOLEAN	Immediately
CTEQ					
-	-	FALSE	-	-	7/7

Description: 1: The working area limitation of the axis concerned is active in the negative direction.

0: The working area limitation of the axis concerned is switched off in the negative direction.

The setting data is parameterized via the operator panel in the operating area "Parameters" by activating/deactivating the working area limitation.

SD irrelevant for ......

G code: WALIMOF

43420	WORKAREA_LIMIT_PLUS			-	A3
mm, degrees	Working area limitation plus			DOUBLE	Immediately
-					
-	-	1.0e+8	-	-	7/7

Description: The working area defined in machine (MCS) in the positive direction of the axis concerned can be limited with axial working area limitation.

The setting data can be changed on the operator panel in the operating area "Parameters".

The positive working area limitation can be changed in the program with G26.

SD irrelevant for ......

G code: WALIMOF

Related to ....

SD43400 $SA_WORKAREA_PLUS_ENABLE

MD10709 $MN_PROG_SD_POWERON_INIT_TAB

MD10710 $MN_PROG_SD_RESET_SAVE_TAB

43430	WORKAREA_LIMIT_MINUS			-	A3
mm, degrees	Working area limitation minus			DOUBLE	Immediately
-					
-	-	-1.0e+8	-	-	7/7

Description: The working area defined in machine (MCS) in the negative direction of the axis concerned can be limited with axial working area limitation.

The setting data can be changed on the operator panel in the operating area "Parameters".

The negative working area limitation can be changed in the program with G25.

SD irrelevant for ......

G code: WALIMOF

Related to ....

SD43410 $SA_WORKAREA_MINUS_ENABLE

MD10709 $MN_PROG_SD_POWERON_INIT_TAB

MD10710 $MN_PROG_SD_RESET_SAVE_TAB

43500	FIXED_STOP_SWITCH			-	F1
-	Selection of travel to fixed stop			BYTE	Immediately
-					
802d-cu3	-	0	0	1	2/2
802d-ng2	-	0	0	1	2/2
802d-ng3	-	0	0	1	2/2
802d-tm1	-	0	0	1	0/0
802d-tm2	-	0	0	1	2/2
802d-tm3	-	0	0	1	2/2

Description: The "Travel to fixed stop" function can be selected and deselected with this setting data.

SD=0 Deselect "Travel to fixed stop"

SD=1 Select "Travel to fixed stop"

The setting date can be overwritten by the part program using the command FXS[x]=1/0.

43510	FIXED_STOP_TORQUE			-	F1
%	Fixed stop clamping torque			DOUBLE	Immediately
-					
802d-cu3	-	5.0	0.0	800.0	2/2
802d-ng2	-	5.0	0.0	800.0	1/1
802d-ng3	-	5.0	0.0	800.0	1/1
802d-tm1	-	5.0	0.0	800.0	0/0
802d-tm2	-	5.0	0.0	800.0	2/2
802d-tm3	-	5.0	0.0	800.0	2/2

Description: The clamping torque is entered in this setting data as a % of the maximum motor torque (corresponds to % of max. current value with FDD).

Please note that a clamping torque greater than 100% may only be present for a short time, otherwise the motor will be damaged.

When selecting the function "Travel to fixed stop" through programming FXS[.], the default setting of the MD37010 $MA_FIXED_STOP_TORQUE_DEF applies until it is programmed with FXST[.].

The FXST[x] command effects a block-synchronous change to this setting data. It can also be changed by the user or via the PLC.

The SD is already operative as the stop is approached.

The fixed stop is considered reached if under MD37060 $MA_FIXED_STOP_ACKN_MASK,

Bit 1 = 0: (no acknowledgement required) the NC/PLC interface signal V390x 0002.5 (fixed stop reached) is set by the NC.

Bit 1 = 1: (acknowledgement required) the NC/PLC interface signal V390x 0002.5 (fixed stop reached) is set by the NC and is acknowledged with the NC/PLC interface signal V380x 0001.1 (acknowledge fixed stop reached).

Related to ....

MD37010 $MA_FIXED_STOP_TORQUE_DEF(default setting for clamping torque)

43520	FIXED_STOP_WINDOW			-	F1
mm, degrees	Fixed stop monitoring window			DOUBLE	Immediately
-					
-	-	1.0	-	-	0/0

Description: The fixed stop monitoring window is entered in this setting data.

The setting data is active only if the fixed stop has been reached.

The fixed stop is considered reached when,

- with MD37060 $MA_FIXED_STOP_ACKN_MASK, bit 1 = 0 (no acknowledgment required) interface signal (Festanschlag erreicht) von der NC gesetzt wird
- with MD37060 $MA_FIXED_STOP_ACKN_MASK, bit 1 = 1 (acknowledgment required) interface signal (Festanschlag erreicht) von der NC gesetzt wird und mit dem Nahtstellensignal (Festanschlag erreicht quittieren) quittiert wird

If the position at which the fixed stop was detected leaves the tolerance band by more than the amount specified in SD43520 $SA_FIXED_STOP_WINDOW, then alarm 20093 "Fixed stop monitoring has responded" is output and the "FXS" function is deselected.

The status of the setting data is indicated on the operator panel in the "Parameters" area.

The FXSW[x] command effects a block-synchronous change to this setting data. It can also be changed by the user or via the PLC.

The value is otherwise transferred from MD37020 $MA_FIXED_STOP_WINDOW_DEF to the setting data when "Travel to fixed stop" is active.

Related to ....

MD37020 $MA_FIXED_STOP_WINDOW_DEF (default setting for fixed stop monitoring window)

43600	IPOBRAKE_BLOCK_EXCHANGE			A06, A10	K1
%	Block change criterion 'braking ramp'			DOUBLE	Immediately
-					
-	-	0.0	0	100.0	1/1

Description: Specifies the application time at single axis interpolation for the block change criterion braking ramp: At 100%, the block change criterion is fulfilled at the time of application of the braking ramp. At 0%, the block change criterion is identical with IPOENDA.

Note:

MD10710 $MN_PROG_SD_RESET_SAVE_TAB can be set so that the value written by the part program is transferred into the active file system on reset (i.e. the value is retained even after reset).

43610	ADISPOSA_VALUE			A06, A10	P2
mm, degrees	Tolerance window 'braking ramp'			DOUBLE	Immediately
-					
-	-	0.0	-	-	1/1

Description: In case of single-axis interpolation, this value defines the size of the tolerance window which the axis must have reached in order to enable a block change in case of the block-change criterion 'braking ramp with tolerance window valid' and when reaching the corresponding % value of the braking ramp (SD43600 $SA_IPOBRAKE_BLOCK_EXCHANGE).

Note:

By means of the MD 10710 $MN_PROG_SD_RESET_SAVE_TAB, the user can specify that the value written by the part program is transferred into the active file system in case of a reset (i.e. the value is retained even after the reset).

43700	OSCILL_REVERSE_POS1			-	P5
mm, degrees	Oscillation reversal point 1			DOUBLE	Immediately
-					
802d-cu3	-	0.0	-	-	7/7
802d-ng2	-	0.0	-	-	7/7
802d-ng3	-	0.0	-	-	7/7
802d-tm1	-	0.0	-	-	0/0
802d-tm2	-	0.0	-	-	0/0
802d-tm3	-	0.0	-	-	0/0

Description: Position of the oscillating axis at reversal point 1.

Note:

MD10710 $MN_PROG_SD_RESET_SAVE_TAB can be be set so that the value written by the part program is transferred to the active file system on reset (that is the value is retained after RESET.)

Application example(s)

NC language: OSP1[Axis]=Position

Related to ....

SD43710 $SA_OSCILL_REVERSE_POS2

MD10709 $MN_PROG_SD_POWERON_INIT_TAB

MD10710 $MN_PROG_SD_RESET_SAVE_TAB

43710	OSCILL_REVERSE_POS2			-	P5
mm, degrees	Oscillation reversal point 2			DOUBLE	Immediately
-					
802d-cu3	-	0.0	-	-	7/7
802d-ng2	-	0.0	-	-	7/7
802d-ng3	-	0.0	-	-	7/7
802d-tm1	-	0.0	-	-	0/0
802d-tm2	-	0.0	-	-	0/0
802d-tm3	-	0.0	-	-	0/0

Description: Position of the oscillating axis at reversal point 2.

Note:

MD 10710 $MN_PROG_SD_RESET_SAVE_TAB can be be set so that the value written by the part program is transferred to the active file system on reset (that is the value is retained after reset.)

Application example(s)

NC language: OSP2[Axis]=Position

Related to ....

SD43700 $SA_OSCILL_REVERSE_POS1

MD10709 $MN_PROG_SD_POWERON_INIT_TAB

MD10710 $MN_PROG_SD_RESET_SAVE_TAB

43720	OSCILL_DWELL_TIME1			-	P5
s	Hold time at oscillation reversal point 1			DOUBLE	Immediately
-					
802d-cu3	-	0.0	-	-	7/7
802d-ng2	-	0.0	-	-	7/7
802d-ng3	-	0.0	-	-	7/7
802d-tm1	-	0.0	-	-	0/0
802d-tm2	-	0.0	-	-	0/0
802d-tm3	-	0.0	-	-	0/0

Description: Hold time of the oscillating axis at reversal point 1.

Note:

MD 10710 $MN_PROG_SD_RESET_SAVE_TAB can be be set so that the value written by the part program is transferred to the active file system on reset (that is the value is retained after reset.)

Application example(s) NC language: OST1[Axis]=Position

Related to ....

SD43730 $SA_OSCILL_DWELL_TIME2

MD10709 $MN_PROG_SD_POWERON_INIT_TAB

MD10710 $MN_PROG_SD_RESET_SAVE_TAB

43730	OSCILL_DWELL_TIME2			-	P5
s	Hold time at oscillation reversal point 2			DOUBLE	Immediately
-					
802d-cu3	-	0.0	-	-	7/7
802d-ng2	-	0.0	-	-	7/7
802d-ng3	-	0.0	-	-	7/7
802d-tm1	-	0.0	-	-	0/0
802d-tm2	-	0.0	-	-	0/0
802d-tm3	-	0.0	-	-	0/0

Description: Hold time of the oscillating axis at reversal point 2.

Note:

MD 10710 $MN_PROG_SD_RESET_SAVE_TAB can be be set so that the value written by the part program is transferred to the active file system on reset (that is the value is retained after reset.)

Application example(s)

NC language: OST2[Axis]=Position

Related to ....

SD43720 $SA_OSCILL_DWELL_TIME1

MD10709 $MN_PROG_SD_POWERON_INIT_TAB

MD10710 $MN_PROG_SD_RESET_SAVE_TAB

43740	OSCILL_VELO			-	P5
mm/min, rev/min	Feedrate of reciprocating axis			DOUBLE	Immediately
-					
802d-cu3	-	0.0	-	-	7/7
802d-ng2	-	0.0	-	-	7/7
802d-ng3	-	0.0	-	-	7/7
802d-tm1	-	0.0	-	-	0/0
802d-tm2	-	0.0	-	-	0/0
802d-tm3	-	0.0	-	-	0/0

Description: Feed rate of the oscillating axis

Note:

MD 10710 $MN_PROG_SD_RESET_SAVE_TAB can be be set so that the value written by the part program is transferred to the active file system on reset (that is the value is retained after reset.)

Application example(s)

NC language: FA[Axis]=F value

Related to ....

MD10709 $MN_PROG_SD_POWERON_INIT_TAB

MD10710 $MN_PROG_SD_RESET_SAVE_TAB

43750	OSCILL_NUM_SPARK_CYCLES			-	P5
-	Number of spark-out strokes			DWORD	Immediately
-					
802d-cu3	-	0	-	-	7/7
802d-ng2	-	0	-	-	7/7
802d-ng3	-	0	-	-	7/7
802d-tm1	-	0	-	-	0/0
802d-tm2	-	0	-	-	0/0
802d-tm3	-	0	-	-	0/0

Description: Number of sparking-out strokes performed after ending the oscillating movement

Application example(s)

NC language: OSNSC[Axis]=Stroke number

Note:

MD 10710 $MN_PROG_SD_RESET_SAVE_TAB can be be set so that the value written by the part program is transferred to the active file system on reset (that is the value is retained after reset.)

Related to ....

MD10709 $MN_PROG_SD_POWERON_INIT_TAB

MD10710 $MN_PROG_SD_RESET_SAVE_TAB

43760	OSCILL_END_POS			-	P5
mm, degrees	End position of the reciprocating axis			DOUBLE	Immediately
-					
802d-cu3	-	0.0	-	-	7/7
802d-ng2	-	0.0	-	-	7/7
802d-ng3	-	0.0	-	-	7/7
802d-tm1	-	0.0	-	-	0/0
802d-tm2	-	0.0	-	-	0/0
802d-tm3	-	0.0	-	-	0/0

Description: Position the oscillating axis travels to after ending the sparking-out strokes.

Note:

MD 10710 $MN_PROG_SD_RESET_SAVE_TAB can be be set so that the value written by the part program is transferred to the active file system on reset (that is the value is retained after reset.)

Application example(s)

NC language: OSE[Axis]=Position

Related to ....

MD10709 $MN_PROG_SD_POWERON_INIT_TAB

MD10710 $MN_PROG_SD_RESET_SAVE_TAB

43770	OSCILL_CTRL_MASK			-	P5
-	Oscillation sequence control mask			DWORD	Immediately
-					
802d-cu3	-	0	-	-	7/7
802d-ng2	-	0	-	-	7/7
802d-ng3	-	0	-	-	7/7
802d-tm1	-	0	-	-	0/0
802d-tm2	-	0	-	-	0/0
802d-tm3	-	0	-	-	0/0

Description:

```
Bit mask:
Bit no.       | Meaning in OSCILL_CTRL_MASK
------------------------------------------------------------------------------
0(LSB)-1      | 0: Stop at the next reversal point if the
              |    oscillating movement is switched off
              |
              | 1: Stop at reversal point 1 if the
              |    oscillating movement is switched off
              | 2: Stop at reversal point 2 if the
              |    oscillating movement is switched off
              | 3: Do not approach a reversal point when the oscillating
                   movement is switched off
              |    if no sparking-out strokes are programmed
------------------------------------------------------------------------------
2             | 1: Approach end position after sparking out
------------------------------------------------------------------------------
3             | 1: If the oscillating movement is aborted by delete
                   distance-to-go,
            |     then the sparking-out strokes are to be executed afterwards
              |    and the end position approached if necessary
------------------------------------------------------------------------------
4             | 1: If the oscillating movement is aborted by delete
                   distance-to-go,
              |    then the corresponding reversal point
              |    is approached on switch off
------------------------------------------------------------------------------
5             | 1: Changed feedrate does not become active until the
                   next reversal point
------------------------------------------------------------------------------
6             | 1: Path override is active if the feed rate is 0,
              |    otherwise speed override is active
------------------------------------------------------------------------------
7             | 1: In the case of rotary axes DC (shortest path)
------------------------------------------------------------------------------
8             | 1: Execute sparking-out stroke as single stroke not as double
                   stroke
------------------------------------------------------------------------------
9             | 1: On starting, first approach the starting position, see
              |    SD43790 $SA_OSCILL_START_POS
------------------------------------------------------------------------------
Application example(s)
NC language:       OSCTRL[Axis]=(setting options, reset options)
```

Related to ....
MD10709 $MN_PROG_SD_POWERON_INIT_TAB
MD10710 $MN_PROG_SD_RESET_SAVE_TAB

43780	OSCILL_IS_ACTIVE			-	P5
-	Activate oscillation movement			BOOLEAN	Immediately
-					
802d-cu3	-	FALSE	-	-	7/7
802d-ng2	-	FALSE	-	-	7/7
802d-ng3	-	FALSE	-	-	7/7
802d-tm1	-	FALSE	-	-	0/0
802d-tm2	-	FALSE	-	-	0/0
802d-tm3	-	FALSE	-	-	0/0

Description: Switching the oscillating movement on and off

Note:
MD 10710 $MN_PROG_SD_RESET_SAVE_TAB can be be set so that the value written by the part program is transferred to the active file system on reset (that is the value is retained after reset.)

Application example(s)
NC language: OS[Axis]=1, OS[Axis]=0

Related to ....
MD10709 $MN_PROG_SD_POWERON_INIT_TAB
MD10710 $MN_PROG_SD_RESET_SAVE_TAB

43790	OSCILL_START_POS			-	-
mm, degrees	Start position of reciprocating axis			DOUBLE	Immediately
-					
802d-cu3	-	0.0	-	-	7/7
802d-ng2	-	0.0	-	-	7/7
802d-ng3	-	0.0	-	-	7/7
802d-tm1	-	0.0	-	-	0/0
802d-tm2	-	0.0	-	-	0/0
802d-tm3	-	0.0	-	-	0/0

Description: Position approached by the oscillating axis at the start of oscillation if this is set in SD43770 $SA_OSCILL_CTRL_MASK.

Note:
MD 10710 $MN_PROG_SD_RESET_SAVE_TAB can be be set so that the value written by the part program is transferred to the active file system on reset (that is the value is retained after reset.)

43900	TEMP_COMP_ABS_VALUE			-	K3
-	Position-independent temperature compensation value			DOUBLE	Immediately
-					
-	-	0.0	-	-	0/0

Description: The position-independent temperature compensation value is defined by SD43900 $SA_TEMP_COMP_ABS_VALUE.

-

The machine axis traverses this additional compensation value as soon as the position-independent temperature compensation has been activated (MD32750 $MA_TEMP_COMP_TYPE = 1 oder 3).

SD irrelevant for ......
MD32750 $MA_TEMP_COMP_TYPE = 0 or 2

Related to ....
MD32750 $MA_TEMP_COMP_TYPETemperature compensation type
MD32760 $MA_COMP_ADD_VELO_FACTOR Velocity overshoot caused by compensation

43910	TEMP_COMP_SLOPE			-	K3
-	Lead angle for position-dependent temperature compensation			DOUBLE	Immediately
-					
-	-	0.0	-	-	0/0

Description:

In the case of position-dependent temperature compensation, the error curve characteristic of the temperature-dependent actual-value deviation can often be approximated by a straight line. This straight line is defined by a reference point P_0 and a slope tanß.

SD43910 $SA_TEMP_COMP_SLOPE defines the slope tanß. This slope can be changed by the PLC user program as a function of the current temperature.

The axis traverses additionally the compensation value calculated for the current actual position as soon as the position-dependent temperature compensation becomes active (MD32750 $MA_TEMP_COMP_TYPE = = 2 or 3).

MD32760 $MA_COMP_ADD_VELO_FACTOR limits the maximum angle of slope tanß_max of the error curve. This maximum angle of slope cannot be exceeded.

SD irrelevant for ......

MD32750 $MA_TEMP_COMP_TYPE = 0 or 1

Special cases, errors, ...

When SD43910 $SA_TEMP_COMP_SLOPE is greater than tanß_max, the slope tanß_max is used to calculate the position-dependent temperature compensation value internally. No alarm is output.

Related to ....

MD32750 $MA_TEMP_COMP_TYPE Temperature compensation type

SD43920 $SA_TEMP_COMP_REF_POSITION Reference position for position-dependent temperature compensation

MD32760 $MA_COMP_ADD_VELO_FACTOR Velocity overshoot caused by compensation

43920	TEMP_COMP_REF_POSITION			-	K3
-	Ref. position of position-dependent temperature compensation			DOUBLE	Immediately
-					
-	-	0.0	-	-	0/0

Description:

In the case of position-dependent temperature compensation, the error curve characteristic of the temperature-dependent actual-value deviation can often be approximated by a straight line. This straight line is defined by a reference point P_0 and a slope tanß.

SD43920 $SA_TEMP_COMP_REF_POSITION defines the position of the reference point P_0. This reference position can be changed by the PLC user program as a function of the current temperature.

The axis traverses additionally the compensation value calculated for the current actual position as soon as the position-dependent temperature compensation becomes active (MD32750 $MA_TEMP_COMP_TYPE = 2 or 3).

SD irrelevant for ......

MD32750 $MA_TEMP_COMP_TYPE = 0 or 1

Related to ....

MD32750 $MA_TEMP_COMP_TYPE Temperature compensation type

SD43910 $SA_TEMP_COMP_SLOPE Angle of slope for position-dependent temperature compensation

Interface signals - overview

4

4.1 Adressranges

Operand identifiers	Description	Area
V	Data	V0.0 to V79999999.7 (see below)
T	Timers	T0 to T15 (100 ms) T16 to T39 (10 ms)
C	Counters	C0 to C31
I	Figure: digital inputs	I0.0 to I17.7
Q	Figure: digital outputs	Q0.0 to Q11.7
M	Flag	M0.0 to M383.7
SM	Special flag	SM0.0 to SM 0.6 (see below)
O	ACCU (logic)	AC0, AC1 (UDword)
O	ACCU (arithmetic)	AC2, AC3 (Dword)

Structure of V-range addresses:

Type identifier (DB no.)	Range No. (channel and axis No.)	Subarea	Offset	addressing
10 (10-79)	00 (00-99)	0 (0-9)	000 (000-999)	symbolic (8-digit)

Special flag - SM bit definition (read-only):

SM bits	Description
SM0.0	Flag with defined ONE signal
SM0.1	Initial setting: first PLC cycle ’1’, following cycles ’0’
SM0.2	Buffered data lost - only valid in first PLC cycle (’0’ data ok, ’1’ data lost)
SM0.3	Power On: first PLC cycle ’1’, following cycles ’0’
SM 0.4	60 s cycle (alternating ’0’ for 30 s, then ’1’ for 30 s)
SM 0.5	1 s cycle (alternating ’0’ for 0.5 s, then ’1’ for 0.5 s
SM 0.6	PLC cycle (alternating one cycle ’0’, then one cycle ’1’)

Note

All empty fields in the user interface are "Reserved for Siemens" and must not be written in or evaluated!

Fields marked with "0" always receive the value "logical 0".

References to the description of the interface signals refer to the corresponding chapters of the description of functions and are specified by [F "Chapter number"].

Variable access rights:

[r] labels the range “read only” allowed

[r/w] labels the range “read/ write” allowed

additionally data format specification:

1: BIT

8: BYTE

16: INT/WORD

32: DINT/DWORD/REAL

Without data format specification: all named data formats are readable and writable.

4.2 User data

4.2.1 User data 1

1000 Data Block	**Data 1 [r/w]**							
Byte	Bit 7	Bit 6	Bit 5	Bit 4	Bit 3	Bit 2	Bit 1	Bit 0
0000	User data							
up to								
0011	User data							

4.2.2 User data 2

1100 Data Block	**Data 2 [r/w]**							
Byte	Bit 7	Bit 6	Bit 5	Bit 4	Bit 3	Bit 2	Bit 1	Bit 0
0000	User data							
up to								
0007	User data							

4.2.3 Signals from MCP (connected to the MCPA module)

1000 Data block	**Data 1 [r/w]**							
Byte	Bit 7	Bit 6	Bit 5	Bit 4	Bit 3	Bit 2	Bit 1	Bit 0
1000	Key 8 JOG	Key 7 Var. INC	Key 6 User key 6	Key 5 User key 5	Key 4 User key 4	Key 3 User key 3	Key 2 User key 2	Key 1 User key 1
1001	Key 16 4th axis -	Key 15 Spindle left	Key14 Spindle STOP	Key 13 Spindle CW	Key 12 MDA	Key 11 Single block	Key 10 AUTO	Key 9 LOG REF
1002	Key 24 4th axis +	Key 23 1st axis -	Key 22 2nd axis -	Key 21 3rd axis +	Key 20 Rapid traverse override	Key 19 3rd axis -	Key 18 2nd axis +	Key 18 1st axis +
1003						Key 27 START	Key 26 STOP	Key 25 RESET
1004				Feedrate override switch				
				E	D	C	B	A
1005				Spindle override switch				
				E	D	C	B	A

4.2.4 Signals to MCP (connected to the MCPA module)

1000 Data block	**Data 1 [r/w]**							
Byte	Bit 7	Bit 6	Bit 5	Bit 4	Bit 3	Bit 2	Bit 1	Bit 0
1000			LED 6	LED 5	LED 4	LED 3	LED 2	LED 1

4.2.5 Reading/writing NC data: Job [F20.6]

1200 Data Block	**NC data I/s [r/w]** PLC interface -----> NCK							
Byte	Bit 7	Bit 6	Bit 5	Bit 4	Bit 3	Bit 2	Bit 1	Bit 0
0000						PI services	Write variable	Start
0001	Number variable index PI							

1200 ... 1207 Data Block	**NC data I/s [r/w]** PLC interface -----> NCK							
Byte	Bit 7	Bit 6	Bit 5	Bit 4	Bit 3	Bit 2	Bit 1	Bit 0
1000	Variable index							
1001	Area number							
1002	Line index for the NCK variable x (WORD)							
1004	Column index for the NCK variable x (WORD)							
1006	reserved							
1008	Writing: Data to NC variable x (data type of the variables: 1...4 bytes)							

4.2.6 Read/write NC data: Result [F20.6]

1200 Data Block	**NC data I/s [r/w]** NCK interface -----> PLC							
Byte	Bit 7	Bit 6	Bit 5	Bit 4	Bit 3	Bit 2	Bit 1	Bit 0
2000							Error in job	Request completed
2001	reserved							
2002	reserved							

1200 ... 1207 Data Block	**NC data I/s [r/w]** NCK interface -----> PLC							
Byte	Bit 7	Bit 6	Bit 5	Bit 4	Bit 3	Bit 2	Bit 1	Bit 0
3000								Invalid variable
3001	Access result							
3002	reserved							
3004	Reading: Data from NC variable x (data type of the variables: 1...4 bytes)							

Access result:

0 No error 3 Illegal access to object
5 Invalid address 10 Object does not exist

4.3 Retentive data area

1400 Data Block	**Retentive data [r/w]**							
Byte	Bit 7	Bit 6	Bit 5	Bit 4	Bit 3	Bit 2	Bit 1	Bit 0
0000	User data							
up to								
0383	User data							

4.4 User alarm

Note:

Information on PLC alarms, including configuring user alarms, can be found in:

References:

Operating Instructions", Chapter "PLC alarms"

4.4.1 User alarm: Activation

1600 Data Block	**Activating alarm [r/w]** PLC interface -----> HMI							
Byte	Bit 7	Bit 6	Bit 5	Bit 4	Bit 3	Bit 2	Bit 1	Bit 0
0000	Activation of alarm no. 700007	700006	700005	700004	700003	700002	700001	700000
0001	Activation of alarm no. 700015	700014	700013	700012	700011	700010	700009	700008
0002	Activation of alarm no. 700023	700022	700021	700020	700019	700018	700017	700016
0003	Activation of alarm no. 700031	700030	700029	700028	700027	700026	700025	700024
0004	Activation of alarm no. 700039	700038	700037	700036	700035	700034	700033	700032
0005	Activation of alarm no. 700047	700046	700045	700044	700043	700042	700041	700040
0006	Activation of alarm no. 700055	700054	700053	700052	700051	700050	700049	700048
0007	Activation of alarm no. 700063	700062	700061	700060	700059	700058	700057	700056

	Activation of alarm no.							
0008	700071	700070	700069	700068	700067	700066	700065	700064
	Activation of alarm no.							
0009	700079	700078	700077	700076	700075	7000074	700073	700072
	Activation of alarm no..							
0010	700087	700086	700085	700084	700083	700082	700081	700080
	Activation of alarm no.							
0011	700095	700094	700093	700092	700091	700090	700089	700088
	Activation of alarm no.							
0012	700103	700102	700101	700100	700099	700098	700097	700096
	Activation of alarm no.							
0013	700111	700110	700109	700108	700107	700106	700105	700104
	Activation of alarm no.							
0014	700119	700118	700117	700116	700115	700114	700113	700112
	Activation of alarm no.							
0015	700127	700126	700125	700124	700123	700122	700121	700120

4.4.2 Variable for alarm

1600 Data Block		**Variable for alarm [r32/w32]** PLC interface -----> HMI						
Start byte								
1000	Variable for alarm 700000 (4 bytes)							
1004	Variable for alarm 700001 (4 bytes)							
1008	Variable for alarm 700002 (4 bytes)							
...	...							
1500	Variable for alarm 700125 (4 bytes)							
1504	Variable for alarm 700126 (4 bytes)							
1508	Variable for alarm 700127 (4 bytes)							

4.4.3 Active alarm reaction

1600 Data Block		**Active alarm reaction [r]** PLC interface -----> HMI						
Byte	Bit 7	Bit 6	Bit 5	Bit 4	Bit 3	Bit 2	Bit 1	Bit 0
2000				PLC STOP	emergency stop	Feed disable on all axes	READ-in disable	NC start disable
2001								
2002								
2003								

4.5 Signals from/to HMI

4.5.1 Program control signals from HMI (retentive area)

1700 Data Block		**HMI signals [r]** HMI interface -----> PLC						
Byte	Bit 7	Bit 6	Bit 5	Bit 4	Bit 3	Bit 2	Bit 1	Bit 0
0000		Test run feedrate selected [F-K1]	M01 selected [F-K1]		DRF selected			
0001	Program test selected [F-K1]				Feedrate override for rapid traverse selected [[F-K1] [F-V1]			
0002	Skip block 7 selected [F-K1]	Skip block 6 selected [F-K1]	Skip block 5 selected [F-K1]	Skip block 4 selected [F-K1]	Skip block 3 selected [F-K1]	Skip block 2 selected [F-K1]	Skip block 1 selected [F-K1]	Skip block 0 selected [F-K1]
0003	Measuring in JOG active [F-M5]	Measure value calculation not finished					Skip block 9 selected [F-K1]	Skip block 8 selected [F-K1]

4.5.2 Program selection from PLC (retentive area)

1700 Data Block	**HMI signals [r/w]** PLC interface -----> HMI							
Byte	Bit 7	Bit 6	Bit 5	Bit 4	Bit 3	Bit 2	Bit 1	Bit 0
1000	Program selection from PLC: Program number [F-A2]							
1001	Command job from PLC: Command [F-A2]							
1002 to 1003								

4.5.3 Checkback signal Program selection from HMI (retentive area)

1700 Data Block	**HMI signals [r]** HMI interface -----> PLC							
Byte	Bit 7	Bit 6	Bit 5	Bit 4	Bit 3	Bit 2	Bit 1	Bit 0
2000							Error Program selection [F-A2]	Program selected [F-A2]
2001							Error Command execution [F-A2]	Execute command [F-A2]

2002 to 2003								

4.5.4 Signals from HMI

1800 Data Block	**HMI signals [r]** HMI interface -----> PLC							
Byte	Bit 7	Bit 6	Bit 5	Bit 4	Bit 3	Bit 2	Bit 1	Bit 0
0000	Reset	Start measuring in JOG [F-M5]		Mode group change over disable [F-M5]		JOG mode [[F-M5]	MDA mode [F-M5]	AUTO mode [F-M5]
0001						Machine function REF [F-M5]		Machine function TEACH IN [F-M5]

4.5.5 Signals from PLC

1800 Data Block	**Signals from PLC [r]** PLC interface							
Byte	Bit 7	Bit 6	Bit 5	Bit 4	Bit 3	Bit 2	Bit 1	Bit 0
1000	MCPA exists						up with saved data [F-A2]	up with default values [F-A2]
1001								
1002								
1003								

4.5.6 Signals from operator panel (retentive area)

1900 Data Block	**HMI signals [r/w]** HMI interface -----> PLC							
Byte	Bit 7	Bit 6	Bit 5	Bit 4	Bit 3	Bit 2	Bit 1	Bit 0
0000		Simulation active [F-K1]						
0001								
0002								
0003								

4.5.7 General selection/status signals from HMI (retentive area)

1900 Data Block	**HMI signals [r]** HMI interface -----> PLC							
Byte	Bit 7	Bit 6	Bit 5	Bit 4	Bit 3	Bit 2	Bit 1	Bit 0
1000								
1001								
1002								
1003	Machine axis [F-H1]			Axis number for handwheel 1		C [F-H1]	B [F-H1]	A [F-H1]
1004	Machine axis [F-H1]			Axis number for handwheel 2		C [F-H1]	B [F-H1]]	A [F-H1]
1005								
1006								
1007								

4.5.8 General selection/status signals to HMI (retentive area)

1900 Data Block	**Signals to operator panel [r/w]** PLC interface -----> HMI							
Byte	Bit 7	Bit 6	Bit 5	Bit 4	Bit 3	Bit 2	Bit 1	Bit 0
5000						OP key disable [F-A2]		
5001								Update tool list [F-W1]
5002								Enable tool measuring in JOG [F-M5]
5003								
5004 ... 5007	T number for tool measuring in JOG (DINT) [F-M5]							

4.6 Auxiliary function transfer from NC channel

2500 Data Block	**Auxiliary functions from NCK channel[r]** NCK interface -----> PLC							
Byte	Bit 7	Bit 6	Bit 5	Bit 4	Bit 3	Bit 2	Bit 1	Bit 0
0000 up to 0003								
0004				M fcts. 5 Change [F-H2]	M fcts. 4 Change [F-H2]	M fcts. 3 Change [F-H2]	M fcts. 2 Change [F-H2]	M fcts. 1 Change [F-H2]
0005								
0006								S fcts. 1 change [F-H2]
0007								
0008								T function 1 change [F-H2]
0009								
0010								D function 1 change [F-H2]
0011								
0012						H fcts. 3 change [F-H2]	H fcts. 2 change [F-H2]	H fcts. 1 change [F-H2]
0013 up to 0019								

4.6.1 Decoded M signals: (M0 - M99)

2500 Data Block	**M functions from NCK channel[r]** NCK interface -----> PLC							
Byte	Bit 7	Bit 6	Bit 5	Bit 4	Bit 3	Bit 2	Bit 1	Bit 0
	Dynamic M functions [F-H2]							
1000	M7	M6	M5	M4	M3	M2	M1	M0
	Dynamic M functions [F-H2]							
1001	M15	M14	M13	M12	M11	M10	M9	M8
	Dynamic M functions [F-H2]							
1002	M23	M22	M21	M20	M19	M18	M17	M16
	...							
	Dynamic M functions [F-H2]							
1012					M99	M98	M97	M96
1013 up to 1015								

Remarks:

The signals are output for the duration of a PLC cycle.

Static M functions must be created from dynamic M functions by the PLC user himself / herself.

Dynamic M functions are decoded by the basic program (M00 to M99).

4.6.2 Transferred T functions

2500 Data Block	**T functions from NCK channel[r]** NCK interface -----> PLC							
Start byte	Bit 7	Bit 6	Bit 5	Bit 4	Bit 3	Bit 2	Bit 1	Bit 0
2000	T function 1 (DINT) [F-H2]							
2004 to 2007								

4.6.3 Transferred M functions

2500 Data Block	**M functions from NCK channel[r]** NCK interface -----> PLC							
Start byte	Bit 7	Bit 6	Bit 5	Bit 4	Bit 3	Bit 2	Bit 1	Bit 0
3000	M function 1 (DINT) [F-H2]							
3004	Extended address of M function 1 (byte)							
3008	M function 2 (DINT) [F-H2]							
3012	Extended address of M function 2 (byte)							
3016	M function 3 (DINT) [F-H2]							
3020	Extended address of M function 3 (byte)							
3024	M function 4 (DINT) [F-H2]							
3028	Extended address of M function 4 (byte)							
3032	M function 5 (DINT) [F-H2]							
3036	Extended address of M function 5 (byte)							

4.6.4 Transferred S functions

2500 Data Block	**S functions from NCK channel[r]** NCK interface -----> PLC							
Start byte	Bit 7	Bit 6	Bit 5	Bit 4	Bit 3	Bit 2	Bit 1	Bit 0
4000	S function 1 (REAL) [F-H2]							
4004	Extended address of S function 1 (byte)							
4008	S function 2 (REAL) [F-H2]							
4012	Extended address of S function 2 (byte)							
4016								
4020								

4.6.5 Transferred D functions

2500 Data Block	**D functions from NCK channel[r]** NCK interface -----> PLC							
Start byte	Bit 7	Bit 6	Bit 5	Bit 4	Bit 3	Bit 2	Bit 1	Bit 0
5000	D function 1 (DINT) [F-H2]							
5004								

4.6.6 Transferred H functions

2500 Data Block	**H functions from NCK channel[r]** NCK interface -----> PLC							
Start byte	Bit 7	Bit 6	Bit 5	Bit 4	Bit 3	Bit 2	Bit 1	Bit 0
6000	H function 1 (REAL) [F-H2]							
6004	Extended address for H function 1 (INT) [F-H2]							
6008	H function 2 (REAL)							
6012	Extended address for H function 2 (INT) [F-H2]							
6016	H function 3 (REAL) [F-H2]							
6020	Extended address for H function 3 (INT) [F-H2]							

4.7 NCK signals

4.7.1 General signals to NCK

2600 Data Block	**General signals to NCK [r/w]** PLC interface -----> NCK							
Byte	Bit 7	Bit 6	Bit 5	Bit 4	Bit 3	Bit 2	Bit 1	Bit 0
0000	Protection level [F-A2]					Ack-nowledge emer-gency stop [F-N2]	emer-gency stop [F-N2]	Braking at contour in case of EMERGE NCY STOP [F-N2]
	4	5	6	7				
0001						Request axis distances-to-go [F-H1]	Request axis actual values [F-H1]	INC inputs in mode group range active 1) [F-H1]
0002								
0003								

Remarks:

1) see operating mode signals

4.7.2 General signals from NCK

2700 Data Block	**General signals from NCK [r]** NCK interface -----> PLC							
Byte	Bit 7	Bit 6	Bit 5	Bit 4	Bit 3	Bit 2	Bit 1	Bit 0
0000							EMERGENCY STOP active [F-N2]	
0001	INCH dimension system [F-G2]						Probe 2 actuated [F-M5]	Probe 1 actuated [F-M5]
0002		Drive ready [F-A2]	Drives in cyclical operation [F-A2]					
0003		Air temperature alarm [F-A2]						NCK alarm is active [F-A2]
0004	Software cam MINUS 7	Software cam MINUS 6	Software cam MINUS 5	Software cam MINUS 4	Software cam MINUS 3	Software cam MINUS 2	Software cam MINUS 1	Software cam MINUS 0
0005								
0006								
0007								
0008	Software cam PLUS 7	Software cam PLUS 6	Software cam PLUS 5	Software cam PLUS 4	Software cam PLUS 3	Software cam PLUS 2	Software cam PLUS 1	Software cam PLUS 0
0009								
0010								
0011								
0012	Modification counter for motions of handwheel 1							
0013	Modification counter for motions of handwheel 2							
0014								
0015	Modification counter, inch/metricunit system							
0016								
0017								
0018								
0019								

4.7.3 Signals to fast inputs and outputs

2800 Data block	**Signals to fast inputs and outputs [r/w]** Interface PLC -----> NCK							
Byte	Bit 7	Bit 6	Bit 5	Bit 4	Bit 3	Bit 2	Bit 1	Bit 0
0000	Disable digital NCK inputs							
	Input 8	Input 7	Input 6	Input 5	Input 4	Input 3	Input 2	Input 1
0001	Values from the PLC for the NCK inputs							
	Input 8	Input 7	Input 6	Input 5	Input 4	Input 3	Input 2	Input 1
0004	Disable digital NCK outputs							
	Output 8	Output 7	Output 6	Output 5	Output 4	Output 3	Output 2	Output 1
0005	Overwrite screenform for digital NCK outputs							
	Output 8	Output 7	Output 6	Output 5	Output 4	Output 3	Output 2	Output 1
0006	Value from the PLC for the digital NCK outputs							
	Output 8	Output 7	Output 6	Output 5	Output 4	Output 3	Output 2	Output 1
0007	Setpoint screenform for the NCK outputs							
	Output 8	Output 7	Output 6	Output 5	Output 4	Output 3	Output 2	Output 1

2800 Data block	**Signals to fast inputs and outputs [r/w]** Interface PLC -----> NCK							
Byte	Bit 7	Bit 6	Bit 5	Bit 4	Bit 3	Bit 2	Bit 1	Bit 0
1000	Disable external digital NCK inputs							
	Input 16	Input 15	Input 14	Input 13	Input 12	Input 11	Input 10	Input 9
1001	Values from the PLC for the external NCK inputs							
	Input 16	Input 15	Input 14	Input 13	Input 12	Input 11	Input 10	Input 9
1008	Disable external digital NCK outputs							
	Output 16	Output 15	Output 14	Output 13	Output 12	Output 11	Output 10	Output 9
1009	Overwrite screenform for the external digital NCK outputs							
	Output 16	Output 15	Output 14	Output 13	Output 12	Output 11	Output 10	Output 9
1010	Value from the PLC for the external digital NCK outputs							
	Output 16	Output 15	Output 14	Output 13	Output 12	Output 11	Output 10	Output 9
1011	Setpoint screenform for the external digital NCK outputs							
	Output 16	Output 15	Output 14	Output 13	Output 12	Output 11	Output 10	Output 9

4.7.4 Signal from fast inputs and outputs

2900 Data block	**Signals from fast inputs and outputs [r/w]** Interface PLC -----> NCK							
Byte	Bit 7	Bit 6	Bit 5	Bit 4	Bit 3	Bit 2	Bit 1	Bit 0
0000	Actual values of the digital NCK inputss							
	Input 8	Input 7	Input 6	Input 5	Input 4	Input 3	Input 2	Input 1
0004	Setpoints of the digital NCK outputs							
	Output 8	Output 7	Output 6	Output 5	Output 4	Output 3	Output 2	Output 1

2900 Data block	**Signals to fast inputs and outputs [r/w]** Interface PLC -----> NCK							
Byte	Bit 7	Bit 6	Bit 5	Bit 4	Bit 3	Bit 2	Bit 1	Bit 0
1000	Actual values of the external digital NCK inputs							
	Input 16	Input 15	Input 14	Input 13	Input 12	Input 11	Input 10	Input 9
1004	NCK setpoint for the external digital NCK outputs							
	Output 16	Output 15	Output 14	Output 13	Output 12	Output 11	Output 10	Output 9

4.7.5 Operating mode signals

3000 Data Block	**Operating mode signals to NCK [r/w]** PLC interface -----> NCK							
Byte	Bit 7	Bit 6	Bit 5	Bit 4	Bit 3	Bit 2	Bit 1	Bit 0
0000	Reset [F-K1]			Mode group changeover disable [F-K1]		Operating mode		
						JOG [F-K1]	MDI [F-K1]	AUTOM. [F-K1]
0001						Machine function		
						REF [F-K1]		Teach In [F-K1]
0002	Machine function [1] [F-H1]							
		Continuous traversal	INCvar	INC10 000	INC1000	INC100	INC10	INC1
0003								

Remarks:

Machine functionin order to use machine function signals in VB3000 0002, signal “INC inputs in mode group range active” (V2600 0001.0) must be set to “1”
Machine function INC10 000 is not supported by all machine control panels.

3100 Data Block	**Operating mode signals to NCK [r]** PLC interface -----> NCK							
Byte	Bit 7	Bit 6	Bit 5	Bit 4	Bit 3	Bit 2	Bit 1	Bit 0
0000						Active mode		
					802-READY [F-K1]	JOG [F-K1]	MDI [F-K1]	AUTOM. [F-K1]
0001						Active machine function		
						REF [F-K1]		Teach In [F-K1]
0002		Continuous traversing active	var. INC active	10 000 INC active	1000 INC active	100 INC active	10 INC active	1 INC active
0003								

4.8 Channel Signals

4.8.1 Signals to NC channel

Control signals to NC channel

3200 Data Block		**Signals to NCK channel [r/w]** PLC interface -----> NCK						
Byte	Bit 7	Bit 6	Bit 5	Bit 4	Bit 3	Bit 2	Bit 1	Bit 0
0000		Activate dry run feed [F-V1]	M01 Activate [F-K1]	Single block [4] Activate [F-K1]	DRF Activate	Forward travel Activate	Reverse travel Activate	
0001	Activate program test [F-K1]						Enable protection zones [F-N4]	Activate referencing [F-R1]
0002	Activate ”Skip block 7”	Activate ”Skip block 6”	Activate ”Skip block 5”	Activate ”Skip block 4”	Activate ”Skip block 3”	Activate ”Skip block 2”	Activate ”Skip block 1”	Activate ”Skip block 0” [F-K1]
0003	Nibbling and punching							
			Stroke initiated manually 2 [F-N4]	Delayed stroke [F-N4]	Stroke does not run [F-N4]	Stroke supp-ressed [F-N4]	Stroke initiated manually [F-N4]	Stroke disable [F-N4]
0004	Feedrate override[2] [F-V1]							
	H	G	F	E	D	C	B	O

0005	Rapid traverse override[3] [F-V1]							
	H	G	F	E	D	C	B	O
0006	Feedrate override[1] active [F-V1]	Rapid traverse override active [F-V1]	Limited path velocity	Program level abort [F-K1]	Delete number of subroutine cycles [F-K1]	Delete distance to-go [F-A2]	Read-in disable [F-K1]	Feedrate disable [F-V1]
0007			Suppress Start Lock	NC stop axes plus spindle [F-K1]	NC stop [F-K1]	NC Stop at block limit [F-K1]	NC Start [F-K1]	NC Start disable [F-K1]
0008	Activate machine-related protection zone [F-H1]							
	Area 8	Area 7	Area 6	Area 5	Area 4	Area 3	Area 2	Area 1
0009	Activate machine-related protection zone							
							Area 10	Area 9
0010	Activate channel-specific protection zone							
	Area 8	Area 7	Area 6	Area 5	Area 4	Area 3	Area 2	Area 1
0011	Activate channel-specific protection zone							
							Area 10	Area 9
0012								
0013	Do not disable tool [F-W1]		Deactivate workpiece counter [F-W1]	Activatd PTP drive				
0014						Activate contour handwheel (bit-/binary-coded)		
	No tool change commands	JOG of cycle mode	Activate associated M01	Neg. direction for sim. contour handwheel	Sim. contour handwheel ON		Handwheel 2	Handwheel 1
0015	Activate ”Skip block 9”	Activate ”Skip block 8”						

Remarks:

[1]+ Feedrate override activeEven if the feedrate override is not active, (=100%) the 0% position still functions.

[2]+ Feedrate override31 positions (Gray code)

[3]+ Rapid override31 positions (Gray code)

[4]’s Guide”)

Control signals to geometry axes (axes in WCS)

3200 Data Block			**Signals to NCK channel [r/w]** PLC interface -----> NCK					
Byte	Bit 7	Bit 6	Bit 5	Bit 4	Bit 3	Bit 2	Bit 1	Bit 0
1000	**Geometry axis 1** (axis 1 in WCS)							
	Traversing keys		Rapid traverse override [F-H1]	Traversing key lock [F-H1]	Feedrate stop [F-V1]	Activate handwheel		
	+ [F-H1]	- [F-H1]					2 [F-H1]	1 [F-H1]
1001	Geometry axis 1 (axis 1 in WCS) Machine function 1) [F-H1]							
		Continuous traversal	INCvar	INC10 000	INC1000	INC100	INC10	INC1
1002								
1003								
1004	**Geometry axis 2** (axis 2 in WCS)							
	Traversing keys		Rapid traverse override [F-H1]	Traversing key lock [F-H1]	Feedrate stop [F-H1]	Activate handwheel		
	+ [F-H1]	- [F-H1]					2 [F-H1]	1 [F-H1]
1005	Geometry axis 2 (axis 2 in WCS) Machine function 1) [F-H1]							
		Continuous traversal	INCvar	INC10 000	INC1000	INC100	INC10	INC1
1006								
1007								
1008	**Geometry axis 3** (axis 3 in WCS)							
	Traversing keys		Rapid traverse override [F-H1]	Traversing key lock [F-H1]	Feedrate stop [F-H1]	Activate handwheel		
	+ [F-H1]	- [F-H1]					2 [F-H1]	1 [F-H1]
1009	Geometry axis 3 (axis 3 in WCS) Machine function 1) [F-H1]							
		Continuous traversal	INCvar	INC10 000	INC1000	INC100	INC10	INC1
1010								
1011								

Remarks:1)

Machine function specification of machine function in VB3200 1001, VB3200 1005, VB3200 1009, only if signal “INC inputs in mode group range active” (V2600 0001.0) is not set. Machine function INC10 000 is not supported by all machine control panels.

2) Representation of the handwheel number depending on machine date $MD_HANDWH_VDI_REPRESENTATION (= 0) in bit or (= 1) binary code.

4.8.2 Signals from NC channel

Status signals from NC channel

3300 Data Block			**Signals from NCK channel [r]** NCK interface -----> PLC					
Byte	Bit 7	Bit 6	Bit 5	Bit 4	Bit 3	Bit 2	Bit 1	Bit 0
0000		Last action block active [F-K1]	M0/M1 active [F-K1]	Approach block active [F-K1]	Action block active [F-K1]	Forward travel active [F-K1]	Reverse travel active [F-K1]	Program execution from ext. active
0001	Program test active [F-K1]	Transform. active [F-M1]	M2 / M30 active [F-K1]	Block search active [F-K1]	Handwheel override active	Rev. feedrate active [F-V1]		Referencing active [F-R1]
0002								
0003	Channel status [F-K1]			Program status [F-K1]				
	reset	upted	active	aborted	upted	Stopped		Running
0004	NCK alarm with processing stop present [F-A2]	specific NCK alarm is active [F-A2]			all axes stationary [F-B1]	all axes referenced [F-R1]	Stop request	Start request
0005	Contour handwheel active (bit-/binary-coded)							
							Handwheel 2	Handwheel 1
0006	Nibbling and punching							
							Acknowl. of manual stroke initiation [F-N4]	Stroke initiation [F-N4]
0007								Protection zones no longer guaranteed
0008	Machine-related protection zones preactivated							
		Area 7	Area 6	Area 5	Area 4	Area 3	Area 2	Area 1
0009	Machine-related protection zones preactivated							
							Area 10	Area 9
0010	Channel-specific protection zones preactivated							
		Area 7	Area 6	Area 5	Area 4	Area 3	Area 2	Area 1
0011	Channel-specific protection zones preactivated							
							Area 10	Area 9
0012	Machine-related protection zones violated							
		Area 7	Area 6	Area 5	Area 4	Area 3	Area 2	Area 1
0013	Machine-related protection zones violated							
							Area 10	Area 9
0014	Channel-specific protection zones violated							
		Area 7	Area 6	Area 5	Area 4	Area 3	Area 2	Area 1
0015	Channel-specific protection zones violated							
							Area 10	Area 9

Status signals to geometry axes (axes in WCS)

3300 Data Block			**Signals from NCK channel [r]** NCK interface -----> PLC					
Byte	Bit 7	Bit 6	Bit 5	Bit 4	Bit 3	Bit 2	Bit 1	Bit 0
1000	**Geometry axis 1** (axis 1 in WCS)							
	Motion command [F-H1]		Travel request [F-H1]				Handwheel active [F-H1]	
	plus	minus	plus	minus			2	1
1001	Active machine function [F-H1]							
		Continuous traversal	INCvar	INC10 000	INC1000	INC100	INC10	INC1
1002								
1003								
1004	**Geometry axis 2** (axis 2 in WCS)							
	Motion command [F-H1]		Travel request [F-H1]				Handwheel active [F-H1]	
	plus	minus	plus	minus			2	1
1005	Active machine function [F-H1]							
		Continuous traversal	INCvar	INC10 000	INC1000	INC100	INC10	INC1
1006								
1007								
1008	**Geometry axis 3** (axis 3 in WCS)							
	Motion command [F-H1]		Travel request [F-H1]				Handwheel active [F-H1]	
	plus	minus	plus	minus			2	1
1009	Active machine function [F-H1]							
		Contin-uous traversal	INCvar	INC10 000	INC1000	INC100	INC10	INC1
1010								
1011								

Further status signals from the NC channel

3300 Data Block			**Signals from NCK channel [r]** NCK interface -----> PLC					
Byte	Bit 7	Bit 6	Bit 5	Bit 4	Bit 3	Bit 2	Bit 1	Bit 0
4000								G00 active
4001				Travel request for drive test present			Workpiece setpoint reached [F-K1]	External language mode active [F-A2]
4002				STOP DELAY				
4003	No tool change commands	DELAY FST SUPPRESS		DELAY FST				
4004								
4005		JOG of cycle mode active						

G functions from NC channel

3500 Data Block	**Signals from NCK channel [r]** NCK interface -----> PLC							
Byte	Bit 7	Bit 6	Bit 5	Bit 4	Bit 3	Bit 2	Bit 1	Bit 0
0000	Active G function of group 1							
0001	Active G function of group 2							
...	Active G function of group ...							
0063	Active G function of group 64							

Note:

With SINUMERIK 802D, G group 2 is transferred in VB3500 0001 with values
0: - no group 2 G command is active,
1: G4, 2: G63, 3: G74, 4: G75, 11: G147, 12: G247,
13: G347, 14: G148, 15: G248, 16: G348 (other values: not available in SINUMERIK 802D)

Other settings are possible with MD 22510: see Section 21.3
When the NC program terminates or is aborted, the last status of the groups is retained. The meaning of the G commands is explained in

References:

"Operation and Programming", Section "Overview of instructions"

Note:

synchronous connection between the active NC block and the applied G codes at any given time. The connection does not exist, for instance, if temporally short blocks are used with continuous path mode (G64).

4.9 Axis/spindle signals

4.9.1 Transferred M/S functions, axis-specific

3700 ... 3704 Data block			**M/S functions [r]** PLC interface -----> NCK					
Start byte	Bit 7	Bit 6	Bit 5	Bit 4	Bit 3	Bit 2	Bit 1	Bit0
0000	M function for spindle (DINT) [F-S1]							
0004	S function for spindle (REAL) [F-S1]							

4.9.2 Signals to axis/spindle

Common signals to axis/spindle

3800 ... 3804 Data block			**Signals to axis/spindle [r/w]** PLC interface -----> NCK					
Byte	Bit 7	Bit 6	Bit 5	Bit 4	Bit 3	Bit 2	Bit 1	Bit 0
0000	Feedrate override [F-V1]							
	H	G	F	E	D	C	B	A
0001	Override active [F-V1]		Position measuring system 1 [F-A2]	Follow-up mode [F-A2]	Axis/ spindle disable [F-A2]	Sensor for fixed stop [F-F1]	Acknowledge fixed stop reached [F-F1]	
0002					Clamping in progress [F-A3]	Distance-to-go/ spindle reset [F-S1]	Controller enable [F-A2]	Cam activation
0003	Axis/ spindle enable program test [F-K1]	Velocity/ spindle speed limiting [F-A3]					Enable approach to fixed stop [F-F1]	
0004	Traversing keys [F-H1]		Rapid traverse override [F-H1]	Traversing key lock [F-H1]	Feedrate stop Spindle stop [F-V1]	Activate handwheel [F-H1]		
	plus	minus					2	1
0005	Machine function[1] [F-H1]							
		Continuous traversal	INCvar	INC10 000	INC1000	INC100	INC10	INC1
0006 up to 0011								

Remarks:

1) Machine functionSpecification of machine function in VB380x 0005, only if signal “INC inputs in modegroup range active” (V2600 0001.0) is not set. Machine function INC10 000 is not supported by all machine control panels.

Signals to axis

3800 ... 3805 Data block			**Signals to axis [r/w]** PLC interface -----> NCK					
Byte	Bit 7	Bit 6	Bit 5	Bit 4	Bit 3	Bit 2	Bit 1	Bit 0
1000 (axis)	Delay. Ref. pt. approach [F-R1]			Modulo Limit Enabled	2nd software limit switch [F-A3]		Hardware limit switch [F-A3]	
					plus	minus	plus	minus
1001					JOG to position [F-H1]	JOG fixed-point approach 2 [F-H1]	JOG fixed-point approach 1 [F-H1]	JOG fixed-point approach 0 [F-H1]
1002								
1003								
1004								
1005								

Explanation:

The signals IC, DC, ACP, ACN may be effective only alternatively or none at all. If none of the signals is set, AC (Absolute Coordinate) will become effective.

Signals to spindle

3800 ... 3805 Data block			**Signals to spindle [r/w]** PLC interface -----> NCK					
Byte	Bit 7	Bit 6	Bit 5	Bit 4	Bit 3	Bit 2	Bit 1	Bit 0
2000 (Spindle)	Clear S value	Spindle: No speed monitoring when switching the gear stage; resynchronize 2	Spindle: Resynchronize 2	 1	Gear changed [F-S1]	Actual gear stage [F-S1] C	 B	 A
2001 (spindle)		Invert M3/M4 [F-S1]		Resynchronize spindle during positioning 1 [F-S1]				Feedrate override valid for spindle [F-V1]
2002 (Spindle)	Setpoint direction of rotation [F-S1] Left	 Right	Oscillation speed [F-S1]	Oscillation via PLC [F-S1]				
2003 (Spindle)	Spindle override [F-V1] H	 G	 F	 E	 D	 C	 B	 A

Signals to PLC axis

3800 ... 3805 Data block			**Signals to PLC axis [r/w]** Interface PLC -----> NCK					
Byte	Bit 7	Bit 6	Bit 5	Bit 4	Bit 3	Bit 2	Bit 1	Bit 0
3000	Start positioning axis							
3001								
3002						Traversing dimension: Inch (not metric)	G function: Shortest path (DC)	G function: incremental (IC)
3003	Indexing position						G function: Abs. pos. direction (ACP)	G function: Abs. neg. direction (ACN)
3004 3005 3006 3007	Position (REAL, with indexing axis: DWORD)							
3008 3009 3010 3011	Feedrate (REAL), if = 0, value is taken from machine data POS_AX_VELO							

Signals to drive

3800 ... 3805 Data block		**Signals to axis/spindle [r/w]** PLC interface -----> NCK						
Byte	Bit 7	Bit 6	Bit 5	Bit 4	Bit 3	Bit 2	Bit 1	Bit 0
4000			Speed setpoint smoothing					
4001	Pulse enable [F-A2]	Speed controller integra-tor disable [F-A2]				Parameter set selection [F-A2] C	B	A
4002								
4003								

Signals to technology functions

3800 ... 3805 Data block		**Signals to axis/spindle [r/w]** Interface PLC -----> NCK						
Byte	Bit 7	Bit 6	Bit 5	Bit 4	Bit 3	Bit 2	Bit 1	Bit 0
5000	Master/ Slave on [F-T3]			Torque compen-satory controller on [F-T3]				
5001								
5002								
5003	Stop HIAxMove	Stop Corr	Stop DEPBCS	Stop DEPMCS	Resume HIAxMove	Resume Corr	Resume DEPBCS	Resume DEPMCS
5004 (grinding) (reciprocat ing)	PLC controls axis [F-P2]	AxStop, stop [F-P2]	Stop at next reversal point [F-P2]	Change reversal point [F-P2]	Set reversal point [F-P2]	AxResume [F-P2]	AxReset [F-P2]	OscillAxExt Reversal
5005 (grinding)		Disable automa-tic sy-nchroni-zation	Start gantry synchroni-zation run					
5006 (spindle)				Position-ing the spindle	Automatic gear stage change	Specified direction of rotation CCW	Specified direction of rotation CW	Spindle STOP

4.9.3 Signals from axis/spindle

General signals from axis/spindle

3900 ... 3905 Data block			**Signals from axis/spindle [r]** NCK interface -----> PLC					
Byte	Bit 7	Bit 6	Bit 5	Bit 4	Bit 3	Bit 2	Bit 1	Bit 0
0000	Position reached with exact stop, [F-B1] fine	Position reached with exact stop, [F-B1] coarse		Referenced/synchronized 1 [F-R1]		Encoder limit frequency exceeded 1 [F-A3]		Spindle/ no axis [F-S1]
0001	Current controller active [F-A2]	Speed control loop active [F-A2]	Position controller active [F-A2]	Axis/ spindle stationary ($n < n_{min}$) [F-A2]	Follow up mode active [F-A2]	Axis ready for operation	AxAlarm	Travel request drive test
0002		Power Fixed stop limited	Fixed stop reached [F-F1]	Activate travel to fixed stop [F-F1]	Measurement active [F-M5]	Revolutional feedrate active	Handwheel override active@	Cam active
0003								
0004	Motion command [F-H1] plus	Motion command [F-H1] minus	Travel request Handwheel active plus	Travel request Handwheel active minus			handwheel aktiv 1) [F-H1] 2	handwheel aktiv 1) [F-H1] 1
0005	Active machine function [F-F1]	Active machine function [F-F1] Contin-uous	Active machine function [F-F1] INCvar	Active machine function [F-F1] INC10 000	Active machine function [F-F1] INC1000	Active machine function [F-F1] INC100	Active machine function [F-F1] INC10	Active machine function [F-F1] INC1
0006 up to 0011	PLC axis assigned firmly							

Signals from axis

3900 ... 3905 Data block			**Signals from axis [r]** NCK interface -----> PLC					
Byte	Bit 7	Bit 6	Bit 5	Bit 4	Bit 3	Bit 2	Bit 1	Bit 0
1000				Modulo Limit Enabled active				
1001	JOG Pos reached	JOG to position active	JOG fixed-point approach reached [F-H1]			JOG fixed-point approach [F-H1]		
			2	1	0	2	1	0
1002	Rotary axis in position	Indexing axis in position	Positioning axis	Path axis				Lubrication pulse [F-A2]
1003								

Representation of the handwheel number depending on machine date MD_HANDWH_VDI_REPRESENTATION (= 0) in bit or (= 1) binary code.

Signals from spindle

3900 ... 3905 Data block			**Signals from spindle [r]** NCK interface -----> PLC					
Byte	Bit 7	Bit 6	Bit 5	Bit 4	Bit 3	Bit 2	Bit 1	Bit 0
2000 (Spindle)					Gearbox change over [F-S1]	Set gear stage [F-S1] C	B	A
2001 (Spindle)	Actual direction of rotation clockwise [F-S1]	Speed monitoring	Spindle In the setpoint range [F-S1]	Supporting range limit violated	Geometry monitoring	Setpoint speed increased [F-S1]	Setpoint speed limited [F-S1]	Speed limit exceeded [F-S1]
2002 (Spindle)	Active spindle mode [F-S1] Control mode	Oscillation mode	Positioning mode	Synchronous mode	Rigid tapping [F-S1]		SUG active	Const. cutting velocity active [F-S1]
2003			Spindle in position					

Signals from PLC axis

3900 ... 3905 Data block		**Signals from spindle [r]** Interface NCK -----> PLC						
Byte	Bit 7	Bit 6	Bit 5	Bit 4	Bit 3	Bit 2	Bit 1	Bit 0
3000	Positioning axis active [F-P2]	Position reached [F-P2]					Error during traversing [F-P2]	Axis cannot be started [F-P2]
3001								
3002								
3003	Error number							

Signals from drive

3900 ... 3905 Data block		**Signals from axis/spindle [r]** NCK interface -----> PLC						
Byte	Bit 7	Bit 6	Bit 5	Bit 4	Bit 3	Bit 2	Bit 1	Bit 0
4000								
4001	Pulses enabled [F-A2]	Speed controller integrator disabled [F-A2]	Drive ready [F-A2]			Active parameter set [F-A2] C	B	A
4002	Variable signaling function	$n_{act} = n_{set}$ [F-A2]	$n_{act}<nx$ [F-A2]	$n_{act}<n_{min}$ [F-A2]	Md<Mdx [F-A2]	Ramp-up completed [F-A2]	Temperature prewarning [F-A2] Heat sink	Motor
4003								Uzk<Uzkx

Signals from technology functions

3900 ... 3905 Data block		**Signals from axis/spindle [r]** Interface NCK -----> PLC						
Byte	Bit 7	Bit 6	Bit 5	Bit 4	Bit 3	Bit 2	Bit 1	Bit 0
5000	Master/ slave active [F-TE3]			Master/ slave Compen-satory controller active [F-TE3]	Master/ slave speed tolerance range coarse [F-TE3]	Master/ slave speed tolerance range fine [F-TE3]		
5001								
5002	ESR reaction initiated	Acceleration warning threshold reached	Velocity warning threshold reached	Overlaid movement				
5003		Max. acceleration reached	Max. velocity reached	Synchronization running	Axis accelerated			
5004 (grinding) (reciprocating)	Recipro-cation active	Recipro-cating motion active	Sparking-out active	Error during the reciproca-ting motion	Reciprocation cannot be started.	OscillAxExt Reversal active		
5005	gantry axis [F-G1]	gantry axis leading axis [F-G1]	gantry group is syn-chronous [F-G1]	Synchronization run ready to start [F-G1]	Gantry warning threshold exceeded [F-G1]	Gantry shutdown limit exceeded [F-G1]		
5006								
5007								
5008			Active additional axis					
			Axis 6	Axis 5	Axis 4	Axis 3	Axis 2	Axis 1

4.10 PLC machine data

4.10.1 INT values (MD 14510 USER_DATA_INT)

4500 Data block	**Signals from NCK [r16]** NCK interface -----> PLC							
Start byte								
0000	Int values (WORD/ 2 Byte)							
0002	Int values (WORD/ 2 Byte)							
0004	Int values (WORD/ 2 Byte)							
up to 0062	Int values (WORD/ 2 Byte)							

4.10.2 HEX values (MD 14512 USER_DATA_HEX)

4500 Data block	**Signals from NCK [r8]** NCK interface -----> PLC							
Byte								
1000	Hex value (BYTE)							
1001	Hex value (BYTE)							
up to 1031	Hex value (BYTE)							

4.10.3 FLOAT values (MD 14514 USER_DATA_FLOAT)

4500 Data block	**Signals from NCK [r32]** NCK interface -----> PLC							
Start byte								
2000	Float value (REAL/ 4 Byte)							
2004	Float value (REAL/ 4 Byte)							
2008	Float value (REAL/ 4 Byte)							
2012	Float value (REAL/ 4 Byte)							
2016	Float value (REAL/ 4 Byte)							
2020	Float value (REAL/ 4 Byte)							
2024	Float value (REAL/ 4 Byte)							
2028	Float value (REAL/ 4 Byte)							

4.10.4 User alarm: Configuration (MD 14516 USER_DATA_PLC_ALARM)

4500 Data block	**Signals from NCK [r8]** NCK interface -----> PLC
Byte	
3000	Alarm reaction/ deletion criterion Alarm 700000
3001	Alarm reaction/ deletion criterion Alarm 700001
up to 3027	Alarm reaction/ deletion criterion Alarm 700031

Note:

Information on PLC alarms, including configuring user alarms, can be found in:

References: Up Guide", Section "PLC alarms"

4.10.5 Reading and writing PLC variables

4900 Data block	**PLC variables [r/w]** PLC interface
Byte	
0000	Offset[0]
0001	Offset[1]
0003	Offset[2]
up to 1021	...
1022	Offset[1022]
1023	Offset[1023]

Note:

The application programmers of NCK and PLC themselves are responsible for the organization of this data area. Data type, position offset and meaning of the variables must be agreed. The memory range limits per data type must be observed (1, 2 or 4 byte types). Further information can be found in:

References:

"Operation and Programming", Section "Reading and writing PLC variables"

4.11 Tool management functions from NC channel

Change signals for tool management functions

5300 Data block			**Tool management functions [r]** NCK interface NCK PLC -----> PLC					
Byte	Bit 7	Bit 6	Bit 5	Bit 4	Bit 3	Bit 2	Bit 1	Bit 0
0000							Tool limit value reached [F-W1]	Tool warning limit reached [F-W1]

Transferred tool management functions

5300 Data block	**Tool management functions [r32]** NCK interface -----> PLC
Byte	
1000	T number for tool warning limit (DINT) [F-W1]
1004	T number for tool limit value (DINT) [F-W1]
1008	
1012	

Axis actual values and distances-to-go

5700 ... 5704 Data block	**Signals from axis/spindle [r32]** NCK interface -----> PLC
Byte	
0000	Axis actual value (REAL)
0004	Axis distance-to-go (REAL)

Note:

Axis actual values and distances-to-go can each be requested separately:

- V2600 0001.1 Request for axis actual values
- V2600 0001.2 Request for axis distances-to-go

Once the respective request has been set, these values are provided by NCK for all axes.

Interface signals - detailed description

5

5.1 General

Interfaces

The exchange of signals and data between the PLC user program and

- NCK (core of numerical control)
- HMI sl (display unit)

takes places through various data areas. The PLC user program does not have to handle the exchange of data and signals. From the users point of view, this takes place automatically.

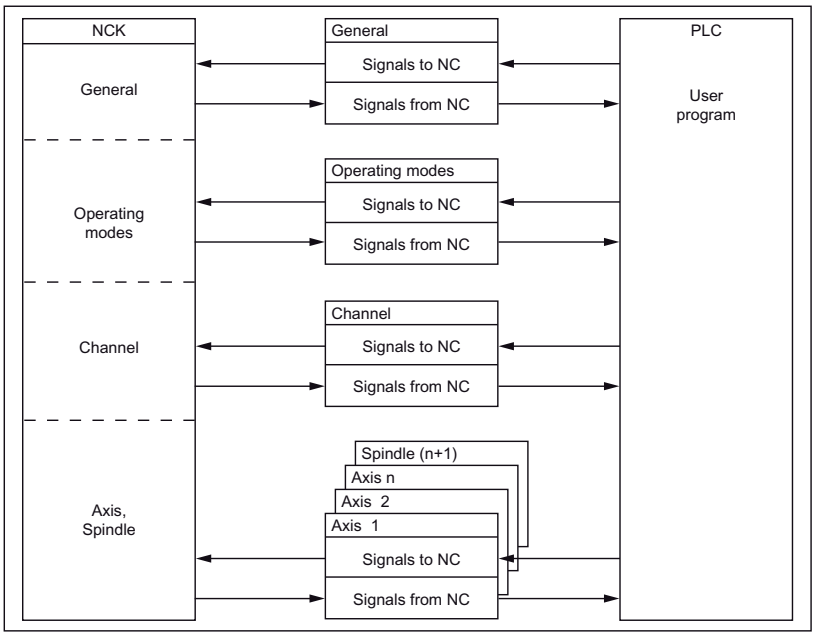

Cyclical signal exchange

The control and status signals of the PLC/NCK interface are updated cyclically.

- General signals
- Operating mode signals
- Channel signals
- Axis/spindle signals

5.2 Signals from/to HMI

5.2.1 Program-control signals from HMI

V1700 0000.5 Interface signal	M01 selected Signal(s) from HMI ---> PLC	
Edge evaluation: no	Signal(s) updated: cyclic	Signal(s) valid from SW:
Signal state 1 or signal transition 0 -> 1	Program control Activate M1 has been selected on the operator interface. This does not activate the function.	
Signal state 0 or signal transition 1 -> 0	Program control Activate M1 has not been selected via the operator interface.	
Related to	IS ”Activate M01” IS ”M0/M1 active”	
Note for the reader:	802D sl Description of Functions: K1	

V1700 0000.6 Interface signal	Dry run feedrate selected Signal(s) from HMI ---> PLC	
Edge evaluation: no	Signal(s) updated: cyclic	Signal(s) valid from SW:
Signal status 1 or edge transition 0 -> 1	Dry run feedrate is selected. Instead of the programmed feedrate, the dry run feedrate entered in SD 42100: DRY_RUN_FEED is effective. When activating the dry run feedrate, the signal is automatically entered in the PLC interface and transferred by the PLC basic program to the PLC interface signal ”Activate dry run feedrate”.	
Signal status 0 or edge transition 1 -> 0	Dry run feedrate is not selected. The programmed feedrate is effective.	
Related to	IS ”Activate dry run feedrate” (V3200 0000.6) SD: DRY_RUN_FEED (dry run feedrate)	
Note for the reader:	802D sl Description of Functions: V1, K1	

V1700 0001.3 Interface signal	Feed override for rapid traverse selected Signal(s) from HMI ---> PLC	
Edge evaluation: no	Signal(s) updated: cyclic	Signal(s) valid from SW:
Signal status 1 or edge transition 0 -> 1	The feedrate override switch is also to act as a rapid traverse override switch. Overrides more than 100 % are limited to the maximum value of 100 % rapid traverse override. The interface signal (IS) ”Feedrate override selected for rapid traverse” is automatically entered in the PLC interface by the operator panel and transferred by the PLC basic program to the PLC interface signal ”Rapid traverse override effective”. Furthermore, the IS ”Feedrate override” (VB3200 0004) is copied by the PLC basic program into the IS ”Rapid traverse override” (VB3200 0005).	
Signal state 0 or signal transition 1 -> 0	Program control -Feed override for rapid traverse- has not been selected via the operator interface.	
Application example(s)	This signal is used if no separate rapid traverse override switch exists.	
Note for the reader:	802D sl Description of Functions: V1	

V1700 0001.7 Interface signal	Program test selected Signal(s) from HMI ---> PLC	
Edge evaluation: no	Signal(s) updated: cyclic	Signal(s) valid from SW:
Signal state 1 or signal transition 0 -> 1	Program control Program test has been selected via the operator interface. This does not activate the function.	
Signal state 0 or signal transition 1 -> 0	Program control Program test has not been selected via the operator interface.	
Related to	IS ”Activate program test” IS ”Program test active”	
Note for the reader:	802D sl Description of Functions: K1	

V1700 0002 V1700 0003.0 to .1 Interface signal	Skip block selected Program test selected””# Signal(s) from HMI ---> PLC	
Edge evaluation: no	Signal(s) updated: cyclic	Signal(s) valid from SW:
Signal state 1 or signal transition 0 -> 1	Program control -skip block- has been selected via the operator interface. This does not activate the function.	
Signal state 0 or signal transition 1 -> 0	Program control -skip block- has not been selected via the operator interface.	
Related to	IS ”Activate skip block”	
Note for the reader:	802D sl Description of Functions: K1	

V1700 0003.7 *** Interface signal	Measuring in JOG active Signal(s) to PLC (HMI ---> PLC)	
Edge evaluation: no	Signal(s) updated: cyclic	Signal(s) valid from SW:
Signal state 1 or signal transition 0 -> 1	The ”Tool measuring in JOG” function is activated by HMI. **Note:** This signal remains set when changing to AUTOMATIC mode in this function. The HMI maintains the JOG image in the display. Only the active mode display changes.	
Signal state 0 or signal transition 1 -> 0	The ”Tool measuring” function is not active.	
Note for the reader:	802D sl Description of Functions: M5	

5.2.2 Signals from HMI

V1800 0000.0 Interface signal	AUTOMATIC mode Signal(s) to PLC (HMI ---> PLC)	
Edge evaluation: yes	Signal(s) updated: cyclic	Signal(s) valid from SW:
Signal state 1 or signal transition 0 -> 1	AUTOMATIC mode has been selected by the HMI. The signal status 1 is active for only one PLC cycle.	
Signal state 0	AUTOMATIC mode is not selected by the HMI.	
Signal irrelevant for	if ”Change mode disable” signal	
Note for the reader:	802D sl Description of Functions: M5	

V1800 0000.1 Interface signal	MDA mode Signal(s) to PLC (HMI ---> PLC)	
Edge evaluation: yes	Signal(s) updated: cyclic	Signal(s) valid from SW:
Signal state 1 or signal transition 0 -> 1	MDA mode has been selected by the HMI. The signal status 1 is active for only one PLC cycle.	
Signal state 0	MDA mode is not selected by the HMI.	
Signal irrelevant for	if ”Change mode disable” signal	
Note for the reader:	802D sl Description of Functions: M5	

V1800 0000.2 Interface signal	JOG mode Signal(s) to PLC (HMI ---> PLC)	
Edge evaluation: yes	Signal(s) updated: cyclic	Signal(s) valid from SW:
Signal state 1 or signal transition 0 -> 1	JOG mode has been selected by the HMI. The signal status 1 is active for only one PLC cycle.	
Signal state 0	JOG mode is not selected by the HMI.	
Signal irrelevant for	if ”Change mode disable” signal	
Note for the reader:	802D sl Description of Functions: M5	

V1800 0000.4 Interface signal	Mode group changeover disable Signal(s) to PLC (HMI ---> PLC)	
Edge evaluation: yes	Signal(s) updated: cyclic	Signal(s) valid from SW:
Signal state 1 or signal transition 0 -> 1	Request by MMC: The current active mode (JOG, MDA or AUTOMATIC) should not be changed. The signal status is active for only one PLC cycle.	
Signal state 0	The mode can be changed.	
Note for the reader:	802D sl Description of Functions: M5	

V1800 0000.6 ***	Start measuring in JOG	
Interface signal	Signal(s) to PLC (HMI ---> PLC)	
Edge evaluation: yes	Signal(s) updated: cyclic	Signal(s) valid from SW:
Signal state 1 or signal transition 0 -> 1	Request to PLC by HMI to start the measuring program with NC start. The signal status 1 is active for only one PLC cycle only.	
Signal state 0		
Note for the reader:	802D sl Description of Functions: M5	

V1800 0001.2	Machine function REF	
Interface signal	Signal(s) to PLC (HMI ---> PLC)	
Edge evaluation: yes	Signal(s) updated: cyclic	Signal(s) valid from SW:
Signal state 1 or signal transition 0 -> 1	The REF machine function is selected from within JOG mode. The signal status 1 is active for only one PLC cycle only.	
Signal state 0	Machine function REF is not selected.	
Signal irrelevant for	if JOG mode is not active.	
Note for the reader:	802D sl Description of Functions: M5	

5.2.3 Signals from operator panel

V1900 0000.6	Simulation activ	
Interface signal	Signal(s) from HMI ---> PLC	
Edge evaluation: no	Signal(s) updated: cyclic	Signal(s) valid from SW:
Signal state 1 or signal transition 0 -> 1	The -simulation- function has been selected via the operator interface.	
Signal state 0 or signal transition 1 -> 0	The -simulation- function has not been selected via the operator interface.	
Related to		
Note for the reader:	802D sl Description of Functions: K1	

5.2.4 General selection/status signals from HMI

V1900 0003.7 V1900 0004.7 Interface signal	Machine axis for handwheel 1 for handwheel 2 Signal(s) from NC (HMI -> PLC)		
Edge evaluation: no		Signal(s) updated: cyclic	Signal(s) valid from SW:
Signal state 1 or signal transition 0 ->1	The operator has assigned an axis to the handwheel (1, 2, 3) directly on the operator panel. This axis is a **machine axis** - not a geometry axis (axis in the WCS). For further information see IS ”Axis number”.		
Signal state 0 or signal transition 1 -> 0	The operator has assigned an axis to the handwheel (1, 2, 3) directly on the operator panel. This axis is a **geometry axis** (axis in the WCS). For further information see IS ”Axis number”.		
Related to	IS ”Axis number” (V1900 0003.0 to .4, ff)		
Note for the reader:	802D sl Description of Functions: H1		

V1900 1003.0 to .2 V1900 1004.0 to .2 Interface signal	Axis number for handwheel 1 for handwheel 2 Signal(s) from NC (HMI -> PLC)		
Edge evaluation: no		Signal(s) updated: cyclic	Signal(s) valid from SW:
Significance of signal	The operator can assign an axis to every handwheel directly via the operator panel. To do so, he defines the required axis (e.g. X). The PLC user interface provides the number of the axis plus the information ’machine axis or geometry axis’ (”machine axis” interface signal) as HMI interface signals. The ”Activate handwheel” interface signal for the defined axis must be set from the PLC user program. Depending on the setting in the HMI interface signal ”machine axis”, either the interface for the geometry axis or for the machine axis is used. The following must be noted when assigning the axis designation to the axis number: · IS ”Machine axis” = 1; i.e. machine axis - not geometry axis: The assignment is made via MD 10000: AXCONF_MACHAX_NAME_TAB[n] (machine axis name). · IS ”Machine axis” = 0; i.e. geometry axis (axis in WCS): The assignment is made via MD 20060: AXCONF_GEOAX_NAME_TAB[n] (geometry axis name in channel). IS ”Channel number geometry axis handwheel n” defines the channel assigned to the handwheel.		

	The following coding applies to the axis number: Bit 2 Bit 1 Bit 0 axis number 0 0 0 - 0 0 1 1 0 1 0 2 0 1 1 3 1 0 0 4 1 0 1 5 Note: Bit 3 and bit 4 must always be left with value =0.
Related to	IS ”Machine axis” (V1900 1003.7 ff) IS ”Activate handwheel” 1 to 3 /geometry axes 1, 2, 3 (V3200 1000.0 to .2, V3200 1004.0 to .2, V3200 1008.0 to .2) IS ”Activate handwheel” 1 to 3 /machine axes (V380x 0004.0 to .2) MD 10000: AXCONF_MACHAX_NAME_TAB [n] (machine axis name) MD 20060: AXCONF_GEOAX_NAME_TAB[n] (name of the geometry axis in the channel)
Note for the reader:	802D sl Description of Functions: H1

5.2.5 General selection/status signals to HMI

V1900 5001.0 Interface signal	Update the tool list Signal(s) from channel (PLC ---> HMI)	
Edge evaluation: yes	Signal(s) updated: cyclic	Signal(s) valid from SW:
Signal state 1 or signal transition 0 -> 1	Tool display is updated	
Signal state 0 or signal transition 1 -> 0	No effect	
Note for the reader:	802D sl Description of Functions: W1	

V1900 5002.0 Interface signal	Enabling machine tool measuring in JOG Signal(s) from NCK (PLC → HMI)	
Edge evaluation: no	Signal(s) updated: cyclic	Signal(s) valid from SW:
Signal state 1 or signal transition 0 -> 1	Measuring in JOG function can be activated.	
Signal state 0 or signal transition 1 -> 0	Measuring in JOG is not possible.	
Note for the reader:	802D sl Description of Functions: M5	

VD1900 5004 Interface signal	Tool number for tool measuring in JOG Signal(s) to HMI (PLC ---> HMI)	
Edge evaluation: no	Signal(s) updated: cyclic	Signal(s) valid from SW:
Value > 0 (DWORD)	Input of T number from PLC for entering measurement results to HMI. The number entered in the HMI screen is used as offset number D.	
Value = 0	No specification of the T no. by PLC	
Signal irrelevant for	if IS "Measuring in JOG active" (V1700 0003.7) is not set.	
Note for the reader:	802D sl Description of Functions: M5	

5.3 Auxiliary function transfer from NC channel

V2500 0004. 0 to .4 V2500 0006.0 V2500 0008.0 V2500 0010.0 V2500 0012.0 to .2 Interface signal	M function Change 1 to 5 S function Change 1 T function Change 1 D function Change 1 H function Change 1 to 3 Signal(s) from channel (NCK -> PLC)	
Edge evaluation: no	Signal(s) updated: cyclic	Signal(s) valid from SW:
Signal state 1	An M, S, T, D or H function has been output to the interface with a new value together with the associated change signal. In this case, the change signal indicates that the appropriate value is valid. The change signals are only valid for one PLC cycle! That means that there is a pending change for this cycle if the signal is 1.	
Signal state 0	The value of the data concerned is not valid.	
Note for the reader:	802D sl Description of Functions: H2	

VB2500 1000 to VB2500 1012 Interface signal	Decoded M signals: M0 - M99 Signal(s) from channel (NCK -> PLC)	
Edge evaluation: no	Signal(s) updated: cyclic	Signal(s) valid from SW:
Signal state 1	The dynamic M signal bits are set by decoded M functions.	
Signal state 0	With a general auxiliary function output, dynamic M signal bits are acknowledged by the PLC system program after the complete AWP routine has been executed once.	
Application example(s)	clockwise rotation, switch coolant ON/OFF	
Related to	specific" (VD370x 0000)	
Note for the reader:	802D sl Description of Functions: H2	

VD2500 2000 Interface signal	T function 1 Signal(s) from channel (NCK -> PLC)	
Edge evaluation: no	Signal(s) updated: Job controlled by NCK	Signal(s) valid from SW:
Signal state 1	The T function programmed in an NC block is made available here as soon as the T change signal is applied. Value range of T function: 0-32000; integer The T function remains valid until it is overwritten by a new T function.	
Signal state 0	· After PLC power-up. · All auxiliary functions are deleted before a new function is entered.	
Application example(s)	Control of automatic tool selection.	
Special cases, errors, ...	When T0 is selected, the current tool is removed from the tool holder but not replaced by a new tool (default configuration by machine manufacturer).	
Note for the reader:	802D sl Description of Functions: H2	

VD2500 3000 VD2500 3008 VD2500 3016 VD2500 3024 VD2500 3032 VB2500 3004 VB2500 3012 VB2500 3020 VB2500 3028 VB2500 3036 Interface signal	M function 1 M function 2 M function 3 M function 4 M function 5 Extended address M function 1 Extended address M function 2 Extended address M function 3 Extended address M function 4 Extended address M function 5 Signal(s) from channel (NCK -> PLC)	
Edge evaluation: no	Signal(s) updated: Job controlled by NCK	Signal(s) valid from SW:
Signal state 1	Up to 5 M functions programmed in an NC block are made available here simultaneously as soon as the M change signals are applied. Value range of the M functions: 0 to 99; integer Value range of extended address: 1-2; integer (spindle number) The M functions remain valid until they are overwritten by new M functions.	
Signal state 0	· After PLC power-up. · All auxiliary functions are deleted before a new function is entered.	
Related to	IS "S function for the spindle (REAL), axis-specific" (VD370x 0000)	
Note for the reader:	802D sl Description of Functions: H2	

VD2500 4000 VD2500 4008 VB2500 4004 VB2500 4012 Interface signal	S function 1 S function 2 Extended address S function 1 Extended address S function 2 Signal(s) from channel (NCK -> PLC)	
Edge evaluation: no	Signal(s) updated: Job controlled by NCK	Signal(s) valid from SW:

Signal state 1	The S function programmed in an NC block (speed or cutting value with G96) is made available here as soon as the S change signal is applied. Value range of the S function: : Floating point (REAL format/4-byte) Value range of extended address: 1-2; integer (spindle number) The S function remains valid until it is overwritten by a new S function.
Signal state 0	· After PLC power-up. · All auxiliary functions are deleted before a new function is entered.
Related to	specific" (VD370x 0004)
Note for the reader:	802D sl Description of Functions: H2

VD2500 5000 Interface signal	D function 1 Signal(s) from channel (NCK -> PLC)	
Edge evaluation: no	Signal(s) updated: Job controlled by NCK	Signal(s) valid from SW:
Signal state 1	The D function programmed in an NC block is made available here as soon as the D change signal is applied. Value range of D function: 0-9; integer The D function remains valid until it is overwritten by a new D function.	
Signal state 0	· After PLC power-up. · All auxiliary functions are deleted before a new function is entered.	
Application example(s)		
Special cases, errors, ...	D0 is reserved for deselecting the current tool offset.	
Note for the reader:	802D sl Description of Functions: H2	

VD2500 6000 VD2500 6008 VD2500 6016 VW2500 6004 VW2500 6012 VW2500 6020 Interface signal	H function 1 H function 2 H function 3 Extended address H function 1 Extended address H function 2 Extended address H function 3 Signal(s) from channel (NCK -> PLC)	
Edge evaluation: no	Signal(s) updated: Job controlled by NCK	Signal(s) valid from SW:
Signal state 1	Up to 3 H functions programmed in an NC block are made available here simultaneously as soon as the H change signals are applied. Value range of the H functions: Floating point (REAL format/4-byte) Value range of extended address: 0 to 99; integer The H functions remain valid until they are overwritten by new H functions.	
Signal state 0	· After PLC power-up. · All auxiliary functions are deleted before a new function is entered.	
Application example(s)	Switching functions on the machine.	
Note for the reader:	802D sl Description of Functions: H2	

5.4 NC signals

5.4.1 General signals to NC

V2600 0000.1 Interface signal	EMERGENCY STOP Signal(s) to NC (PLC ---> NC)		
Edge evaluation: no		Signal(s) updated: cyclic	Signal(s) valid from SW:
Signal state 1 or signal transition 0 -> 1	The NC is switched to the EMERGENCY STOP state and the EMERGENCY STOP procedure is started on the NC.		
Signal state 0 or signal transition 1 -> 0	· The NC is not in the EMERGENCY STOP state. · The EMERGENCY STOP state is (still) active but can be reset with IS "Acknowledge EMERGENCY STOP" and IS "reset".		
Related to	IS "Acknowledge EMERGENCY STOP" (V2600 0000.2) IS "EMERGENCY STOP active" (V2700 0000.1)		

V2600 0000.2 Interface signal	Acknowledge EMERGENCY STOP Signal(s) to NC (PLC ---> NC)		
Edge evaluation: no		Signal(s) updated: cyclic	Signal(s) valid from SW:
Signal state 1 or signal transition 0 -> 1	The EMERGENCY STOP state is reset only if IS "Acknowledge EMERGENCY STOP" followed by IS "Reset" (V3000 0000.7) are set. It must be noted in this respect that IS "Acknowledge EMERGENCY STOP" and IS "Reset" must be set (together) for a long enough period for IS "EMERGENCY STOP active" (V2600 0000.1) to be reset. By resetting the EMERGENCY STOP state: · the "EMERGENCY STOP active" interface signal is reset · the controller enable is switched in · IS "Position control active" is set · Ready" is set · Alarm 3000 is canceled · the part program is no longer processed		
Related to	IS "EMERGENCY STOP" (V2600 0000.1) IS "EMERGENCY STOP active" (V2700 0000.1) IS "Reset" (V3000 0000.7)		

V2600 0001.0 Interface signal	INC inputs in mode group range active Signal(s) to NCK (PLC -> NCK)	
Edge evaluation: no	Signal(s) updated: cyclic	Signal(s) valid from SW:
Signal state 1 or signal transition 0 -> 1	The IS ”INC1”, ”INC10”, ..., ”continuous” in the operating mode range are used as input signals (V3000 0002.0 to .6).	
Signal state 0 or signal transition 1 -> 0	The IS ”INC1”, ”INC10”, ..., ”continuous” in the axis and geometry axis range are used as input signals.	
Related to	IS ”Machine function INC1 to continuous” in operating mode range (V3000 0002.0 to .6) IS ”Machine function INC1,...,continuous” for geometry axis 1 (V3200 1001.0 to .6) for geometry axis 2 (V3200 1005.0 to .6) for geometry axis 3 (V3200 1009.0 to .6) IS ”Machine function INC1,...,continuous” in axis range (V380x 0005.0 to .6)	
Note for the reader:	802D sl Description of Functions: H1	

5.4.2 General signals from NC

V2700 0000.1 Interface signal	EMERGENCY STOP active Signal(s) to NC (PLC ---> NC)	
Edge evaluation: no	Signal(s) updated: cyclic	Signal(s) valid from SW:
Signal state 1 or signal transition 0 -> 1	The NC is in the EMERGENCY STOP state.	
Related to	IS ”EMERGENCY STOP” (V2600 0000.1) IS ”Acknowledge EMERGENCY STOP” (V2600 0000.2)	

V2700 0001.0 Interface signal	Probe 1 is actuated Signal(s) from NCK (NCK → PLC)	
Edge evaluation: no	Signal(s) updated: cyclic	Signal(s) valid from SW:
Signal state 1 or signal transition 0 -> 1	Probe 1 is actuated	
Signal state 0 or signal transition 1 -> 0	Probe 1 is not actuated	
Note for the reader:	802D sl Description of Functions: M5	

V2700 0001.7 Interface signal	INCH dimension system Signal(s) to NC (PLC ---> NC)	
Edge evaluation: no	Signal(s) updated: cyclic	Signal(s) valid from SW:
Signal state 1	The NC works with the inch dimension system.	
Signal state 0	The NC works with the metric dimension system.	
Note for the reader:	802D sl Description of Functions: G2	

V2700 0004.0 to .7 Interface signal	Minus cam signals 1-8 Signal(s) from NCK (NCK---> PLC)		
Edge evaluation: no		Signal(s) updated: cyclically	Signal(s) valid from SW release:
Signal status 1 or edge transition 0 -> 1	The switching edges of the minus cam signals 1-8 are created independently of the direction of traversing of the (rotary) axis and transferred to the PLC interface at the IPO clock. Linear axis: – The minus cam signal switches from 0 to 1 when the axis overtravels the minus cam in the negative axis direction. Modulo rotary axis: – The minus cam signal changes the levels at each positive edge of the plus cam signal.		
Signal status 0 or edge transition 1 -> 0	Linear axis: – The minus cam signal switches from 1 to 0 when the axis overtravels the minus cam in the positive axis direction. Modulo rotary axis: – The minus cam signal changes the levels at each positive edge of the plus cam signal.		

V2700 0008.0 to .7 Interface signal	Plus cam signals 1-32 Signal(s) from NCK (NCK---> PLC)	
Edge evaluation: no	Signal(s) updated: cyclically	Signal(s) valid from SW release:
Signal status 1 or edge transition 0 -> 1	The switching edges of the plus cam signals 1-32 are created independently of the direction of traversing of the (rotary) axis and transferred to the PLC interface at the IPO clock. Linear axis: – The plus cam signal switches from 0 to 1 when the axis overtravels the plus cam in the positive direction. Modulo rotary axis: – The plus cam signal switches from 0 to 1 when the axis overtravels the minus cam in the positive axis direction. The described behavior of the plus cam applies under the following condition: Plus cam - minus cam < 180 degrees If this condition is not fulfilled or the minus cam is greater than the plus cam, the behavior of the plus cam signal is inverted. The behavior of the minus cam signal remains unchanged.	

Signal status 0 or edge transition 1 -> 0	Linear axis: – The plus cam signal switches from 1 to 0 when the axis overtravels the plus cam in the negative direction. Modulo rotary axis: – The plus cam signal switches back from 1 to 0 when the axis overtravels the plus cam in the positive axis direction. The described behavior of the plus cam applies under the following condition: Plus cam - minus cam < 180 degrees If this condition is not fulfilled or the minus cam is greater than the plus cam, the behavior of the plus cam signal is inverted. The behavior of the minus cam signal remains unchanged.

5.5 Mode signals

V3000 0000.0 Interface signal	AUTOMATIC mode Signal(s) to NCK (PLC ---> NCK)	
Edge evaluation: no	Signal(s) updated: cyclic	Signal(s) valid from SW:
Signal state 1 or signal transition 0 -> 1	AUTOMATIC mode is selected by the PLC program.	
Signal state 0 or signal transition 1 -> 0	AUTOMATIC mode is not selected by the PLC program.	
Signal irrelevant for	if ”Mode group changeover disable” signal	
Related to	IS ”Active mode AUTOMATIC”	
Note for the reader:	802D sl Description of Functions: K1	

V3000 0000.1 Interface signal	MDA mode Signal(s) to NCK (PLC ---> NCK)	
Edge evaluation: no	Signal(s) updated: cyclic	Signal(s) valid from SW:
Signal state 1 or signal transition 0 -> 1	MDA mode is selected by the PLC program.	
Signal state 0 or signal transition 1 -> 0	MDA mode is not selected by the PLC program.	
Signal irrelevant for	if ”Mode group changeover disable” signal	
Related to	IS ”Active mode MDA”	
Note for the reader:	802D sl Description of Functions: K1	

V3000 0000.2 Interface signal	JOG mode Signal(s) to NCK (PLC ---> NCK)	
Edge evaluation: no	Signal(s) updated: cyclic	Signal(s) valid from SW:
Signal state 1 or signal transition 0 -> 1	JOG mode is selected by the PLC program.	
Signal state 0 or signal transition 1 -> 0	JOG mode is not selected by the PLC program.	
Signal irrelevant for	if ”Mode group changeover disable” signal	
Related to	IS ”Active mode JOG”	
Note for the reader:	802D sl Description of Functions: K1	

V3000 0000.4 Interface signal	Mode group changeover disable Signal(s) to NCK (PLC ---> NCK)	
Edge evaluation: no	Signal(s) updated: cyclic	Signal(s) valid from SW:
Signal state 1 or signal transition 0 -> 1	The currently active mode (JOG, MDA or AUTOMATIC) cannot be changed.	
Signal state 0	The mode can be changed.	
Note for the reader:	802D sl Description of Functions: K1	

V3000 0000.7 Interface signal	Reset Signal(s) to NCK (PLC ---> NCK)	
Edge evaluation: yes	Signal(s) updated: cyclic	Signal(s) valid from SW:
Signal state 1 or signal transition 0 -> 1	The channel must change to the ”RESET” status. The current program is then in program status ”aborted”. All moving axes and spindles are decelerated to zero speed according to their acceleration ramp without contour violation. The initial settings are set (e.g. for G functions). The alarms are cleared if they are not POWER ON alarms.	
Signal state 0 or signal transition 1 -> 0	Channel status and program run are not affected by this signal.	
Related to	IS ”Channel reset” IS ”All channels in reset state”	
Special cases, errors, ...	An alarm which cancels IS ”802 ready” ensures that the channel is no longer in the Reset state. In order to switch to another operating mode, a ”reset” must then be initiated.	
Note for the reader:	802D sl Description of Functions: K1	

V3000 0001.2 Interface signal	Machine function REF Signal(s) to NCK (PLC ---> NCK)	
Edge evaluation: no	Signal(s) updated: cyclic	Signal(s) valid from SW:
Signal state 1 or signal transition 0 -> 1	Machine function REF is activated in JOG mode.	
Signal state 0 or signal transition 1 -> 0	Machine function REF is not activated.	
Signal irrelevant for ...	if JOG mode is not active.	
Note for the reader:	802D sl Description of Functions: K1	

V3000 0002.0 to .6 Interface signal	Machine function INC1, INC10, INC100, INC1000, INC10000, INCvar, continuous Signal(s) to modes (PLC -> NCK)	
Edge evaluation: no	Signal(s) updated: cyclic	Signal(s) valid from SW:
Signal state 1 or signal transition 0 -> 1	This input range is only used if the ”INC inputs in mode group range active” interface signal (V2600 0001.0) is **set**. The signals then apply to all axes and geometry axes. IS ”INC...” defines how many increments the axis traverses when the traversing key is pressed or the handwheel turned one detent position. JOG mode must be active. With ”INCvar” the value in the general SD 41010: JOG_VAR_INCR_SIZE applies. In ”continuous mode” the associated axis can be traversed with the plus or minus traversing key according to how the traverse key is pressed. As soon as the selected machine function becomes active, this is signaled to the PLC interface (IS ”Active machine function INC1; ...”). If several machine function signals (INC1, INC... or ”Continuous jogging”) are selected at the interface simultaneously, no machine function is activated by the control. **Note:** The input IS ”INC...” or ”continuous” for changing an active machine function must be active for at least one PLC cycle. A static application is not required.	
Signal state 0 or signal transition 1 -> 0	The machine function in question is not selected. No change to the active machine function is required. If an axis is currently traversing an increment, this movement is also aborted if this machine function is deselected or changed over.	
Related to	IS ”INC inputs in mode group range active” (V2600 0001.0) IS ”Machine function INC1, ..., continuous” for geometry axis 1 (V3200 1001.0 to .6) for geometry axis 2 (V3200 1005.0 to .6) for geometry axis 3 (V3200 1009.0 to .6) IS ”Machine function INC1, ..., continuous” in axis range (V380x 0005.0 to .6) IS ”Active machine function INC1, ..., continuous” for geometry axis1 (V3300 1001.0 to .6) for geometry axis 2 (V3300 1005.0 to .6) for geometry axis 3 (V3300 1005.0 to .6) IS ”Active machine function INC1, ..., continuous” in axis range (V390x 0005.0 to .6)	
Note for the reader:	802D sl Description of Functions: H1	

V3100 0000.0 Interface signal	Active mode AUTOMATIC Signal(s) from NCK (NCK ---> PLC)	
Edge evaluation: no	Signal(s) updated: cyclic	Signal(s) valid from SW:
Signal state 1 or signal transition 0 -> 1	AUTOMATIC mode is active.	
Signal state 0 or signal transition 1 -> 0	AUTOMATIC mode is not active.	
Note for the reader:	802D sl Description of Functions: K1	

V3100 0000.1 Interface signal	Active mode MDA Signal(s) from NCK (NCK ---> PLC)	
Edge evaluation:	Signal(s) updated: cyclic	Signal(s) valid from SW:
Signal state 1 or signal transition 0 -> 1	MDA mode is active.	
Signal state 0 or signal transition 1 -> 0	MDA mode is not active.	
Note for the reader:	802D sl Description of Functions: K1	

V3100 0000.2 Interface signal	Active mode JOG Signal(s) from NCK (NCK ---> PLC)	
Edge evaluation: no	Signal(s) updated: cyclic	Signal(s) valid from SW:
Signal state 1 or signal transition 0 -> 1	JOG mode is active.	
Signal state 0 or signal transition 1 -> 0	JOG mode is not active.	
Note for the reader:	802D sl Description of Functions: K1	

V3100 0000.3 Interface signal	802 READY Signal(s) from NCK (NCK ---> PLC)	
Edge evaluation: no	Signal(s) updated: cyclic	Signal(s) valid from SW:
Signal state 1 or signal transition 0 -> 1	This signal is set after POWER ON when all voltages are present. The mode group is now ready and part programs can be processed and axes traversed in the channel.	
Signal state 0 or signal transition 1 -> 0	The mode group/channel is not ready. Possible causes of this are: - A serious axis or spindle alarm is active - Hardware fault - Mode group incorrectly configured (machine data) If the mode group ready signal changes to the ”0” state - the axis and spindle drives are decelerated with max. braking current to zero speed, - the signals from the PLC to the NCK are switched to the inactive state (initial setting).	
Special cases, errors, ...	An alarm which cancels IS ”802 READY” ensures that the channel is no longer in the Reset state. In order to switch to another operating mode, a ”reset” must then be initiated. (V3000 0000.7)	
Note for the reader:	802D sl Description of Functions: K1	

V3100 0001.2 Interface signal	Active machine function REF Signal(s) from NCK (NCK ---> PLC)	
Edge evaluation: no	Signal(s) updated: cyclic	Signal(s) valid from SW:
Signal state 1 or signal transition 0 -> 1	Machine function REF is active in JOG.	
Signal state 0 or signal transition 1 -> 0	Machine function REF is not active.	
Note for the reader:	802D sl Description of Functions: K1	

5.6 Channel-specific signals

5.6.1 Signals to channel

V3200 0000.4 Interface signal	Activate single block Signal(s) to channel (PLC ---> NCK)	
Edge evaluation: no	Signal(s) updated: cyclic	Signal(s) valid from SW:
Signal state 1 or signal transition 0 -> 1	In the AUTOMATIC mode the program is processed in the single-block mode; in MDA only 1 block can be entered in any case.	
Signal state 0 or signal transition 1 -> 0	No effect	
Application example(s)	A new program can first be tested in single block mode in order to monitor the individual program steps more exactly.	
Special cases, errors, ...	· Intermediate blocks can be inserted if tool radius compensation (G41,G42) is selected. · In a series of G33 blocks single block is effective only if ”dry run feedrate” is selected. · Pure calculation blocks are not processed in the single step in ”Single block coarse” but only in ”Single block fine”. The preselection is made via softkey ”Program control”.	
Related to	IS"Single–block selected” IS ”Program status stopped”	
References	Subsection NO TAG	
Note for the reader:	802D sl Description of Functions: K1	

V3200 000.5 Interface signal	Activate M1 Signal(s) to channel (PLC ---> NCK)	
Edge evaluation: no	Signal(s) updated: cyclic	Signal(s) valid from SW:
Signal state 1 or signal transition 0 -> 1	M1 programmed in the part program leads to a programmed stop when processed in AUTOMATIC or MDA mode.	
Signal state 0 or signal transition 1 -> 0	M1 programmed in the part program does not lead to a programmed stop.	
Related to	IS ”M01 selected” (V1700 0000.5) IS ”M0/M1 active” (V3300 0000.5)	
Note for the reader:	802D sl Description of Functions: K1	

V3200 0000.6 Interface signal	Activate dry run feedrate Signal(s) to channel (PLC → NCK)	
Edge evaluation: no	Signal(s) updated: cyclic	Signal(s) valid from SW:
Signal state 1 or signal transition 0 -> 1	Instead of the programmed feedrate (for G1, G2, G3, CIP, CT), the dry run feedrate defined in SD 42100: DRY_RUN_FEED is used if the dry run feedrate is larger than the programmed feedrate. This interface signal is evaluated on an NC start when the channel is in the ”Reset” state. When selected on the PLC, the ”Activate dry run feedrate” interface signal is required to be set by the PLC user program.	
Signal state 0 or signal transition 1 -> 0	The programmed feedrate is used for traversing. Active after Reset.	
Application example(s)	Testing a workpiece program with an increased feedrate.	
Related to	IS ”Dry run feedrate selected” (V1700 0000.6) SD 42100: DRY_RUN_FEED (Dry run feedrate)	
Note for the reader:	802D sl Description of Functions: V1	

V3200 0001.0 Interface signal	Activate referencing Signal(s) to channel (PLC -> NCK)	
Edge evaluation: yes	Signal(s) updated: cyclic	Signal(s) valid from SW:
Signal state 1 or signal transition 0 -> 1	Channel-specific referencing is started with the "Activate referencing" interface signal. The control acknowledges a successful start with the îReferencing activeî interface signal. Each machine axis assigned to the channel can be referenced with channel-specific referencing (this is achieved internally on the control by simulating the plus/minus travel keys). The axis-specific MD 34110: REFP_CYCLE_NR (axis sequence for channel-specific referencing) can be used to define the sequence in which the machine data are referenced. If all axes entered in MD: REFP_CYCLE_NR have reached their reference point, the "all axes referenced" interface signal (V3300 0004.2) is enabled.	
Application example(s)	If the machine axes are to be referenced in a particular sequence, the following options are available: · up · the PLC must check the sequence when starting or define it itself. · specific referencing function is used.	
Related to	”Referencing active” interface signal (V3300 0001.0) ”All axes referenced” interface signal (V3300 0004.2)	
Note for the reader:	802D sl Description of Functions: R1	

V3200 0001.7 Interface signal	Activate program test Signal(s) to channel (PLC ---> NCK)	
Edge evaluation: no	Signal(s) updated: cyclic	Signal(s) valid from SW:
Signal state 1 or signal transition 0 -> 1	Axis disable is set internally for all axes (not spindle). Therefore the machine axes do not move when a part program block or a part program is being processed. The axis movements are simulated on the operator interface with changing axis position values. The axis position values for the display are generated from the calculated setpoints. The part program is processed in the normal way.	
Signal state 0 or signal transition 1 -> 0	Part program processing is not affected by the function program test	
Related to	IS ”Program test selected” IS ”Program test active”	
Note for the reader:	802D sl Description of Functions: K1	

V3200 0002.0 to .7 Interface signal	Skip block Signal(s) to channel (PLC ---> NCK)	
Edge evaluation: no	Signal(s) updated: cyclic	Signal(s) valid from SW:
Signal state 1 or signal transition 0 -> 1	Blocks marked in the part program with an oblique (/) are skipped. If there is a series of skip blocks, this signal is only active if it is pending before decoding of the first block of the series, ideally **before NC start**.	
Signal state 0 or signal transition 1 -> 0	The marked part program blocks are not skipped.	
Related to	IS ”Skip block selected”	
Note for the reader:	802D sl Description of Functions: K1	

V3200 0003.0 Interface signal	Stroke disable Signal(s) to the channel (PLC->NCK)	
Edge evaluation:	Signal(s) updated:	Signal(s) valid from SW release:
Signal status 1 or edge transition 0 -> 1	This signal is used to enable the punching strokes via the PLC. 1-signal: The stroke is disabled; no punching stroke must be initiated by the NC.	
Signal status 0 or edge transition 1 -> 0	0-signal: Stroke enable is provided; if no enable signal is set, no punching stroke can be executed by the NC.	

V3200 0003.1 Interface signal	Stroke initiated manually Signal(s) to the channel (PLC->NCK)	
Edge evaluation:	Signal(s) updated:	Signal(s) valid from SW release:
Signal status 1 or signal transition 0 -> 1	This signal can be used to initiate a single stroke in the manual mode. 1-signal: A manual stroke is executed.	
Signal status 0 or signal transition 1 -> 0	0-signal: No effect	

V3200 0003.2 Interface signal	Stroke suppressed Signal(s) to the channel (PLC->NCK)	
Edge evaluation:	Signal(s) updated:	Signal(s) valid from SW release:
Signal status 1 or edge transition 0 -> 1	The signal merely prevents the stroke. The machine will nevertheless traverse. If the automatic path distribution is active, it also remains active. Merely the ”Initiate stroke” signal is suppressed. The machine will traverse in the ”stop and go” mode. The step length is defined by the path segmentation. 1-signal: The stroke suppression is active.	
Signal status 0 or signal transition 1 -> 0	0-signal: The stroke suppression is not active.	

V3200 0003.3 Interface signal	Stroke does not run Signal(s) to the channel (PLC->NCK)	
Edge evaluation:	Signal(s) updated:	Signal(s) valid from SW release:
Signal status 1 or edge transition 0 -> 1	The NC reacts to this signal with immediate motion stop. If a motion or another action is interrupted due to this signal, an alarm is issued. Physically, the signal for the CNC is identically to the ”Stroke active” signal, i.e. the system is switched such that the two signals are connected to the same NC input via an AND operation. 1-signal: Stroke does not run (corresponds to the ”Stroke enable” signal)	
Signal status 0 or signal transition 1 -> 0	0-signal: Stroke running (corresponds to the ”Stroke enable” signal)	

V3200 0003.4 Interface signal	Delayed stroke Signal(s) to the channel (PLC->NCK)	
Edge evaluation:	Signal(s) updated:	Signal(s) valid from SW release:
Signal status 1 or edge transition 0 -> 1	This signal can be used to activate a ”Delayed stroke”. In respect of its function, this signal corresponds to a programming of PDELAYON. Any further PLC signals not complying with the standard are not evaluated by the NCK. Except for the manual stroke initiation, the evaluation of the signals is limited to PON active. 1-signal: Delayed stroke is active	
Signal status 0 or edge transition 1 -> 0	0-signal: Delayed stroke is not active	

V3200 0003.5 Interface signal	Manual stroke initiation Signal(s) to the channel (PLC->NCK)	
Edge evaluation:	Signal(s) updated:	Signal(s) valid from SW release:
Signal status 1 or edge transition 0 -> 1	–> PLC IS ”Manual stroke initiation acknowledgment” (DB21, ... DBX38.1). 1-signal: Manual stroke initiation is active	
Signal status 0 or edge transition 1 -> 0	0-signal: Manual stroke initiation is not active	

VB3200 0004 Interface signal	Feedrate override Signal(s) to channel (PLC → NCK)		
Edge evaluation: no		Signal(s) updated: cyclic	Signal(s) valid from SW:
Signal state 1 or signal transition 0 -> 1	Gray coding for Feedrate override		
	Switch position	Code	Feedrate override
	1	00001	0.0
	2	00011	0.01
	3	00010	0.02
	4	00110	0.04
	5	00111	0.06
	6	00101	0.08
	7	00100	0.10
	8	01100	0.20
	9	01101	0.30
	10	01111	0.40
	11	01110	0.50
	12	01010	0.60
	13	01011	0.70
	14	01001	0.75
	15	01000	0.80
	16	11000	0.85
	17	11001	0.90
	18	11011	0.95
	19	11010	1.00
	20	11110	1.05
	21	11111	1.10
	22	11101	1.15
	23	11100	1.20
	24	10100	1.20
	25	10101	1.20
	26	10111	1.20
	27	10110	1.20
	28	10010	1.20
	29	10011	1.20
	30	10001	1.20
	31	10000	1.20
Related to	IS ”Feedrate override active” (V3200 0006.7)		
Note for the reader:	802D sl Description of Functions: V1		

VB3200 0005 Interface signal	Rapid traverse override Signal(s) to channel (PLC → NCK)	
Edge evaluation: no	Signal(s) updated: cyclic	Signal(s) valid from SW:
Special cases, errors, ...	The feed disable is inactive when G33 is active.	

Signal state 1 or signal transition 0 -> 1

Gray coding forRapid traverse override

Switch position	Code	Rapid traverse override factor
1	00001	0.0
2	00011	0.01
3	00010	0.02
4	00110	0.04
5	00111	0.06
6	00101	0.08
7	00100	0.10
8	01100	0.20
9	01101	0.30
10	01111	0.40
11	01110	0.50
12	01010	0.60
13	01011	0.70
14	01001	0.75
15	01000	0.80
16	11000	0.85
17	11001	0.90
18	11011	0.95
19	11010	1.00
20	11110	1.00
21	11111	1.00
22	11101	1.00
23	11100	1.00
24	10100	1.00
25	10101	1.00
26	10111	1.00
27	10110	1.00
28	10010	1.00
29	10011	1.00
30	10001	1.00
31	10000	1.00

Related to	IS ”Rapid traverse override active” (V3200 0006.6)
Note for the reader:	802D sl Description of Functions: V1

V3200 0006.0 Interface signal	Feed disable Signal(s) to channel (PLC → NCK)	
Edge evaluation: no	Signal(s) updated: cyclic	Signal(s) valid from SW:
Signal state 1 or signal transition 0 -> 1	The signal is active on a channel in all operating modes. · The signal disables all axes interpolating relative to each other as long as G33 (thread) is not active. All axes are brought to a standstill with adherence to the path contour. When the feed disable is canceled (0 signal), the interrupted part program is continued. · The position control is retained, i.e. the following error is eliminated. · If a travel request is issued for an axis with an active ”Feed disable”, The pending travel request is executed immediately when the ”Feed disable” is canceled. If the axis is interpolating in relation to others, this also applies to these axes.	
Signal state 0 or signal transition 1 -> 0	· The feedrate is enabled for all axes on the channel. · If a travel request (”Travel command”) exists for an axis or group of axes when the ”Feed disable” is canceled, this is executed immediately.	
Special cases, errors, ...	The feed disable is inactive when G33 is active.	
Note for the reader:	802D sl Description of Functions: V1	

V3200 0006.1 Interface signal	Read–in disable Signal(s) to channel (PLC ---> NCK)	
Edge evaluation: no	Signal(s) updated: cyclic	Signal(s) valid from SW:
Signal state 1 or signal transition 0 -> 1	Data transfer of the next block into the interpolator is disabled. This signal is only active in modes AUTOMATIC and MDA.	
Signal state 0 or signal transition 1 -> 0	Data transfer of the next block into the interpolator is enabled. This signal is only active in modes AUTOMATIC and MDA.	
Application example(s)	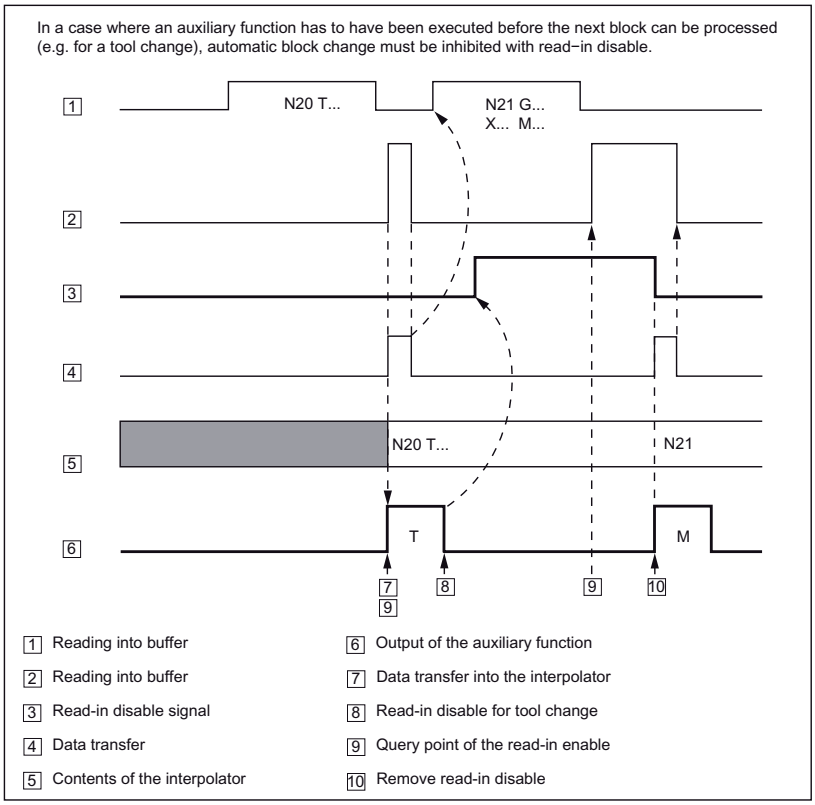	
Related to	IS ”Program status running”	
Note for the reader:	802D sl Description of Functions: K1	

V3200 0006.4 Interface signal	Program level abort Signal(s) to channel (PLC ---> NCK)	
Edge evaluation: yes	Signal(s) updated: cyclic	Signal(s) valid from SW:
Signal state 1 or signal transition 0 -> 1	On each signal transition 0 -> 1 the current program level being processed (subroutine level) is immediately aborted. Processing of the part program continues one level higher after the exit point.	
Signal state 0 or signal transition 1 -> 0	No effect	
Special cases, errors, ...	The main program level cannot be aborted with this IS, only with IS ”Reset”.	
Note for the reader:	802D sl Description of Functions: K1	

V3200 0006.6 Interface signal	Rapid traverse override active Signal(s) to channel (PLC → NCK)	
Edge evaluation: no	Signal(s) updated: cyclic	Signal(s) valid from SW:
Signal state 1 or signal transition 0 -> 1	The rapid traverse override between 0 and a maximum of 100% entered in the PLC interface is channelspecific.	
Signal state 0 or signal transition 1 -> 0	The rapid traverse override entered in the PLC interface is ignored. If the rapid traverse override is not active, an override factor of 100% is used internally on the NC. **Note:** The 1st switch position of the gray-coded interface for the value represents an exception. In this case, this override factor is also used with ”Rapid traverse override inactive” and **0%** is issued as the override value for axes.	
Special cases, errors, ...	The rapid traverse override is inactive if G33 is active.	
Related to	IS ”Rapid traverse override” (V3200 0005)	
Note for the reader:	802D sl Description of Functions: V1	

V3200 0006.7 Interface signal	Feedrate override active Signal(s) to channel (PLC → NCK)	
Edge evaluation: no	Signal(s) updated: cyclic	Signal(s) valid from SW:
Signal state 1 or signal transition 0 -> 1	The feedrate override between 0 and a maximum of 120% entered in the PLC interface is active for the path feedrate and therefore automatically for the related axes. In JOG mode, the feedrate override acts directly on the axes.	
Signal state 0 or signal transition 1 -> 0	The feedrate override entered in the PLC interface is ignored. If the feedrate override is not active, an override factor of 100% is used internally on the NC. **Note:** The 1st switch position of the gray-coded interface for the value represents an exception. In this case, this override factor is also used with ”Feedrate override inactive” and **0%** is issued as the override value for axes (acts the same as ”Feed disable”).	
Special cases, errors, ...	The feedrate override is inactive if G33 is active.	
Related to	IS ”Feedrate override” (V3200 0004)	
Note for the reader:	802D sl Description of Functions: V1	

V3200 0007.0 Interface signal	NC start disable Signal(s) to channel (PLC ---> NCK)	
Edge evaluation: no	Signal(s) updated: cyclic	Signal(s) valid from SW:
Signal state 1 or signal transition 0 -> 1	IS ”NC Start” is ineffective	
Signal state 0 or signal transition 1 -> 0	IS ”NC Start” is effective.	
Application example(s)	This signal is used to suppress renewed program processing because, for example, there is no lubricant.	
Related to	IS ”NC Start”	
Note for the reader:	802D sl Description of Functions: K1	

V3200 0007.1 Interface signal	NC Start Signal(s) to channel (PLC ---> NCK)	
Edge evaluation: yes	Signal(s) updated: cyclic	Signal(s) valid from SW status
Signal state 1 or signal transition 0 -> 1	AUTOMATIC mode: The selected NC program is started or resumed. If data are transferred from the PLC to the NC in the ”Program interrupted” state, the data are calculated immediately on NC Start. MDA mode: The entered part program blocks are released for execution or continued.	
Signal state 0 or signal transition 1 -> 0	No effect	
Related to	IS ”NC Start disable”	
Note for the reader:	802D sl Description of Functions: K1	

V3200 0007.2 Interface signal	NC Stop at block limit Signal(s) to channel (PLC ---> NCK)	
Edge evaluation: no	Signal(s) updated: cyclic	Signal(s) valid from SW:
Signal state 1 or signal transition 0 -> 1	The current NC program is stopped after the current part program block has been processed. Otherwise as for IS ”NC Stop”.	
Signal state 0 or signal transition 1 -> 0	No effect	
Related to	IS ”NC Stop” IS ”NC Stop axes plus spindles” IS ”Program status stopped” IS ”Channel status interrupted”	
Note for the reader:	802D sl Description of Functions: K1	

V3200 0007.3 Interface signal	NC stop Signal(s) to channel (PLC ---> NCK)		
Edge evaluation: no	Signal(s) updated: cyclic	Signal(s) valid from SW:	
Signal state 1 or signal transition 0 -> 1	The current NC program is stopped immediately, the current block is not completed. Only the axes without contour violation are stopped. Distances to go are traversed only after a renewed start. The program status changes to ”stopped”, the channel status changes to ”interrupted”.		
Signal state 0 or signal transition 1 -> 0	No effect		
Application example(s)	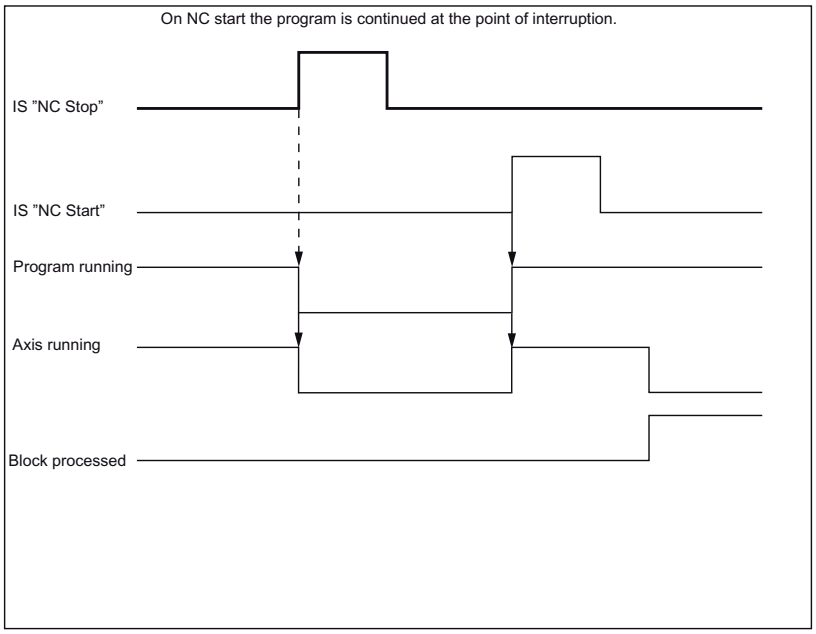		
Special cases, errors, ...	The signal NC stop must be active for at least one PLC cycle.		
Related to	IS ”NC Stop at block limit” IS ”NC Stop axes plus spindles” IS ”Program status stopped” IS ”Channel status interrupted”		
Note for the reader:	802D sl Description of Functions: K1		

V3200 0007.4 Interface signal	NC Stop axes plus spindles Signal(s) to channel (PLC ---> NCK)	
Edge evaluation: no	Signal(s) updated: cyclic	Signal(s) valid from SW:
Signal state 1 or signal transition 0 -> 1	—go are not completed until a start signal is given. The axes and the spindle are stopped. They are brought to a controlled standstill, however. The program status changes to stopped, the channel status changes to interrupted.	
Signal state 0 or signal transition 1 -> 0	No effect	
Signal irrelevant for	Channel status Reset Program status aborted	
Special cases, errors, ...	All axes and spindles that were not caused to move by a program or program block (e.g. axes are moved by pressing the travel keys on the machine control panel) are not decelerated to zero speed with "NC stop axes plus spindles". The program is continued at the interrupted place with NC Start. The signal "NC stop axes plus spindles" must be pending for at least one PLC cycle. 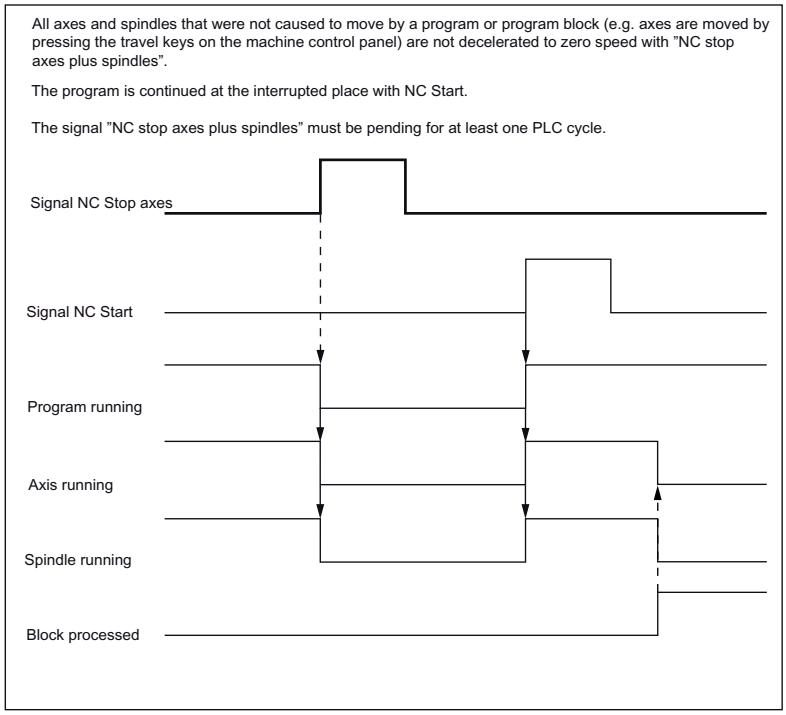 	
Related to	IS "NC Stop at block limit" IS "NC Stop" IS "Program status stopped" IS "Channel status interrupted"	
Note for the reader:	802D sl Description of Functions: K1	

V3200 0013.4 Interface signal	Activate PTP travel Signal(s) to channel (PLC ---> NCK)	
Edge evaluation: no	Signal(s) updated: cyclic	Signal(s) valid from SW:
Signal state 1 or signal transition 0 -> 1	Activate PTP travel.	
Signal state 0 or signal transition 1 -> 0	Activate CP travel	
Related to		
Note for the reader:	Programming and Operating Manual cylindrical grinding	

V3200 0013.5 Interface signal	Deactivate workpiece counter Signal(s) to channel (PLC ---> NCK)	
Edge evaluation: no	Signal(s) updated: cyclic	Signal(s) valid from SW:
Signal state 1 or signal transition 0 -> 1	The workpiece count monitoring is turned off with activated tool monitoring.	
Signal state 0 or signal transition 1 -> 0	No effect	
Related to		
Note for the reader:	802D sl Description of Functions: W1	

V3200 1000.0 to .1 V3200 1004.0 to .1 V3200 1008.0 to .1 Interface signal	Activate handwheel (1 to 3) for geometry axis 1 for geometry axis 2 for geometry axis 3 Signal(s) to channel (PLC -> NCK)	
Edge evaluation: no	Signal(s) updated: cyclic	Signal(s) valid from SW:
Signal state 1 or signal transition 0 -> 1	These machine data determine whether this geometry axis is assigned to handwheel 1, 2, 3 or no handwheel. Only one handwheel can be assigned to an axis at any one time. If several ”Activate handwheel” interface signals are set, priority ”Handwheel 1” before ”Handwheel 2” before ”Handwheel 3” applies. **Note:**Three geometry axes can be traversed simultaneously with handwheels 1 to 3!	
Signal state 0 or signal transition 1 -> 0	Neither handwheel 1, 2 nor 3 is assigned to this geometry axis.	
Application example(s)	The PLC user program can use this interface signal to disable the influence of turning the handwheel on the geometry axis.	
Related to	IS ”Handwheel active” 1 to 3 for geometry axis 1: V3300 1000.0 to .2 for geometry axis 2: V3300 1004.0 to .2 for geometry axis 3: V3300 1008.0 to .2	
Note for the reader:	802D sl Description of Functions: H1	

V3200 1000.3 V3200 1004.3 V3200 1008.3 Interface signal	Feed stopGeo-axes (axes in the WCS) Signal(s) to channel (PLC → NCK)	
Edge evaluation: no	Signal(s) updated: cyclic	Signal(s) valid from SW:
Signal state 1 or signal transition 0 -> 1	The signal is only active in JOG mode (axes traversed in the WCS). · The signal triggers a feed stop for the axis. Traversing axes are brought to a standstill under controlled braking (ramp stop). No alarm is output. · The position control is retained, i.e. the following error is eliminated. · If a travel request is issued for an axis with an active ”Feed stop”, the request is retained. This pending travel request is executed immediately after the ”Feed stop” is canceled.	
Signal state 0 or signal transition 1 --> 0	· The feedrate is enabled for the axis. · If a travel request (”Travel command”) is active when the ”Feed stop” is canceled, this is executed immediately.	
Note for the reader:	802D sl Description of Functions: V1	

V3200 1000.4 V3200 1004.4 V3200 1008.4	Traverse key disable	for geometry axis 1 for geometry axis 2 for geometry axis 3	
Interface signal	Signal(s) to channel (PLC -> NCK)		
Edge evaluation: no	Signal(s) updated: cyclic		Signal(s) valid from SW:
Signal state 1 or signal transition 0 -> 1	The traverse keys plus and minus have no effect on the geometry axes in question. It is thus not possible to traverse the geometry axis in JOG with the traverse keys on the machine control panel. If the traverse key disable is activated during a traverse movement, the geometry axis is stopped.		
Signal state 0	Traverse keys plus and minus are enabled.		
Application example(s)	It is thus possible, depending on the operating mode, to disable manual traverse of the geometry axis in JOG mode with the traverse keys from the PLC user program.		
Related to	IS ”Traverse key plus” and ” ... minus” for geometry axis 1 (V3200 1000.7 and .6) for geometry axis 2 (V3200 1004.7 and .6) for geometry axis 3 (V3200 1008.7 and .6)		
Note for the reader:	802D sl Description of Functions: H1		

V3200 1000.5 V3200 1004.5 V3200 1008.5	Rapid traverse override	for geometry axis 1 for geometry axis 2 for geometry axis 3	
Interface signal	Signal(s) to channel (PLC -> NCK)		
Edge evaluation: no	Signal(s) updated: cyclic		Signal(s) valid from SW:
Signal state 1 or signal transition 0 -> 1	If the PLC interface signal ”Rapid traverse override” is set together with ”Traverse key plus” and ”Traverse key minus”, the geometry axis in question traverses at rapid traverse set for JOG on the assigned machine axis (e.g.: X -> X1). The rapid traverse velocity is defined in MD 32010: JOG_VELO_RAPID. Rapid traverse override is active in the following JOG modes: · Continuous traversing · Incremental traversing If rapid traverse override is active, the velocity can be modified with the rapid traverse override switch.		
Signal state 0 or signal transition 1 -> 0	The geometry axis traverses at the defined JOG velocity (SD: JOG_SET_VELO or MD: JOG_VELO).		
Note for the reader:	802D sl Description of Functions: H1, V1		

V3200 1000.7 and .6 V3200 1004.7 and .6 V3200 1008.7 and .6	Traverse keys plus and minus	for geometry axis 1 for geometry axis 2 for geometry axis 3	
Interface signal	Signal(s) to channel (PLC -> NCK)		
Edge evaluation: yes	Signal(s) updated: cyclic		Signal(s) valid from SW:

Signal state 1 or signal transition 0 -> 1	The selected axis can be traversed in both directions in JOG mode with the traverse keys plus and minus. **Incremental traversing** With signal 1 the axis starts to traverse at the set increment. If the signal changes to the 0 state before the increment is traversed, the traversing movement is interrupted. When the signal state changes to 1 again the movement is continued. The axis can be stopped and started several times as described above until the increment has been completely traversed. **Continuous traversal** If no INC measure is selected, and ”continuous” is, the axis travels for as long as the traverse key is pressed. If both traverse signals (plus and minus) are set at the same time, no movement occurs, or any current movement is aborted! The effect of the traverse keys can be disabled for every axis individually with the PLC interface signal ”Traverse key disable”. **Notice!** In contrast to machine axes, for geometry axes, only one geometry axis can be traversed at any one time using the traversing keys. Alarm 20062 is triggered if an attempt is made to traverse more than one axis with the traverse keys.
Signal state 0 or signal transition 1 -> 0	No traverse
Signal irrelevant for	Operating modes AUTOMATIC and MDA
Special cases, errors, ...	The geometry axis cannot be traversed in JOG mode: · If it is already being traversed via the axis-specific PLC interface (as a machine axis). · If another geometry axis is already being traversed with the traverse keys. Alarm 20062 ”Axis already active” is output.
Related to	IS ”Traverse key plus” and ”Traverse key minus” for the machine axes (V380x 0004.7 and .6) IS ”Traverse key disable” for geometry axis 1 (V3200 1000.4) for geometry axis 2 (V3200 1004.4) for geometry axis 3 (V3200 1008.4)
Note for the reader:	802D sl Description of Functions: H1

V3200 1001.0 to .6 V3200 1005.0 to .6 V3200 1009.0 to .6 Interface signal	for geometry axis 1 for geometry axis 2 for geometry axis 3 Signal(s) to channel (PLC -> NCK)	
Edge evaluation: no	Signal(s) updated: cyclic	Signal(s) valid from SW:
Signal state 1 or signal transition 0 -> 1	This input range is only used if IS "INC inputs in mode group range active" (V2600 0001.0) is **not set**. The interface signals INC... define how many increments the geometry axis traverses when the traverse key is pressed or the handwheel is turned one detent position. JOG mode must be active. With "INCvar" the value in the general SD 41010: JOG_VAR_INCR_SIZE applies. In mode "continuous" the associated geometry axis can be traversed with the plus or minus traversing key according to how the traverse key is pressed. As soon as the selected machine function becomes active, this is signaled to the PLC interface (interface signal "Active machine function INC1;..."). If several machine function signals (INC1, INC... or "Continuous jogging") are selected at the interface simultaneously, no machine function is activated by the control. **Note:** The input IS "INC..." or "continuous" for changing an active machine function must be active for at least one PLC cycle. A static application is not required.	
Signal state 0 or signal transition 1 -> 0	The machine function in question is not selected. No change to the active machine function is requested. If an axis is currently traversing an increment, this movement is also aborted if this machine function is deselected or changed over.	
Related to	IS "Active machine function INC1, ..." for geometry axis 1 (V3300 1001.0 ... .6) for geometry axis 2 (V3300 1005.0 ... .6) for geometry axis 3 (V3300 1005.0 ... .6) IS "INC inputs in the mode group area active" (V2600 0001.0)	
Note for the reader:	802D sl Description of Functions: H1	

5.6.2 Signals from the channel

V3300 0000.3 Interface signal	Action block active Signal(s) from channel (NCK ---> PLC)	
Edge evaluation: no	Signal(s) updated: cyclic	Signal(s) valid from SW:
Signal state 1 or signal transition 0 -> 1	Block search: Output with accumulated auxiliary function outputs in progress (see Subsection NO TAG)	
Application example(s)		
Note for the reader:	802D sl Description of Functions: K1	

V3300 0000.4 Interface signal	Approach block active Signal(s) from channel (NCK ---> PLC)	
Edge evaluation: no	Signal(s) updated: cyclic	Signal(s) valid from SW:
Signal state 1 or signal transition 0 -> 1	Block search with calculation/on contour: Start block in progress (see Subsection NO TAG)	
Application example(s)		
Note for the reader:	802D sl Description of Functions: K1	

V3300 0000.5 Interface signal	M0/M1 active Signal(s) from channel (NCK ---> PLC)	
Edge evaluation: no	Signal(s) updated: cyclic	Signal(s) valid from SW:
Signal state 1 or signal transition 0 -> 1	The part program block has been processed, the auxiliary functions have been output and - M0 is stored in the working memory - M1 is stored in the working memory and IS ”Activate M01” is active The program status changes to stopped.	
Signal state 0 or signal transition 1 -> 0	- With IS ”NC Start” - On program abort as a result of Reset	
Related to	IS ”Activate M01” IS ”M01 selected”	
Note for the reader:	802D sl Description of Functions: K1	

V3300 0000.6 Interface signal	Last action block active Signal(s) from channel (NCK -> PLC)	
Edge evaluation: no	Signal(s) updated: cyclic	Signal(s) valid from SW:
Signal state 1 or signal transition 0 -> 1	Block search: Last block of the output with collected auxiliary function outputs in progress (see Subsection NO TAG)	
Application example(s)		
Note for the reader:	802D sl Description of Functions: K1	

V3300 0001.0 Interface signal	Referencing active Signal(s) from channel (NCK -> PLC)	
Edge evaluation: yes	Signal(s) updated: cyclic	Signal(s) valid from SW:
Signal state 1 or signal transition 0 -> 1	Channel-specific referencing is operational.	
Signal state 0 or signal transition 1 -> 0	· Channel-specific referencing has been completed · Axis-specific referencing running · No referencing active	
Signal irrelevant for	Spindles	
Related to	”Activate referencing” interface signal (V3200 0001.0)	
Note for the reader:	802D sl Description of Functions: R1	

V3300 0001.2 Interface signal	Revolutional feedrate active Signal(s) from channel (NCK → PLC)	
Edge evaluation: no	Signal(s) updated: cyclic	Signal(s) valid from SW:
Signal state 1 or signal transition 0 -> 1	When programming G95 (revolutional feedrate) in the AUTOMATIC mode.	
Application example(s)		
Related to		
Note for the reader:	802D sl Description of Functions: V1	

V3300 0001.4 Interface signal	Block search active Signal(s) from channel (NCK ---> PLC)	
Edge evaluation: no	Signal(s) updated: cyclic	Signal(s) valid from SW:
Signal state 1 or signal transition 0 -> 1	The Block search function is active. It was selected and started on the operator interface.	
Signal state 0 or signal transition 1 -> 0	The block search function is not active.	
Application example(s)	The block search function makes it possible to jump to a certain block within a part program and to start processing the part program at this block.	
Note for the reader:	802D sl Description of Functions: K1	

V3300 0001.5 Interface signal	M2/M30 active Signal(s) from channel (NCK ---> PLC)	
Edge evaluation: no	Signal(s) updated: cyclic	Signal(s) valid from SW:
Signal state 1 or signal transition 0 -> 1	NC block with M2 is completely processed. If traversing motions are also programmed in this block, the signal is not output until the target position is reached.	
Signal state 0 or signal transition 1 -> 0	- No program end or abort - Status after power-up of control system - Start of an NC program	
	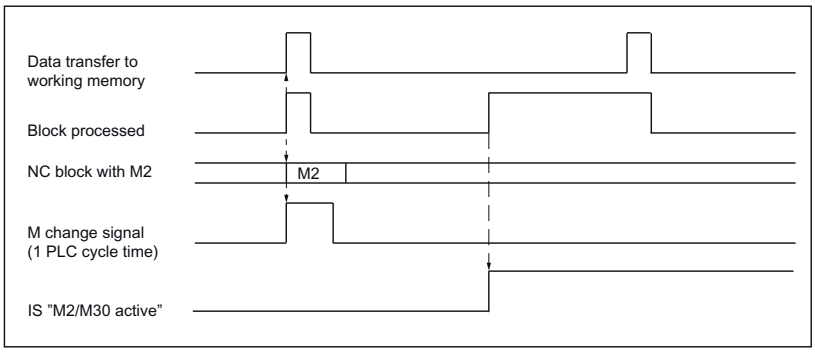	
Application example(s)	The PLC can detect the end of program processing with this signal and react appropriately.	

Special cases, errors, ...	- The functions M2 and M30 have equal priority. Only M2 should be used. - IS "M2/M30 active" is applied statically at the end of a program. - Not suitable for automatic follow-on functions such as workpiece counting, bar feed, etc. M2 must be programmed in a separate block and the word M2 or the decoded M signal used for these functions. - No auxiliary functions leading to read-in stop may be written in the last block of a program.
Note for the reader:	802D sl Description of Functions: K1

V3300 0001.6 Interface signal	Transformation active Signal(s) from NCK channel (NCK->PLC)	
Edge evaluation: no	Signal(s) updated: cyclic	Signal(s) valid from SW:
Signal state 1 or signal transition 0 -> 1	The NC command TRANSMIT or TRACYL is programmed in the part program. The corresponding block has been processed by the NC and a transformation is now active.	
Signal state 0 Edge change 1->0	No transformation is active.	
Note for the reader:	802D sl Description of Functions: M1	

V3300 0001.7 Interface signal	Program test active Signal(s) from channel (NCK ---> PLC)	
Edge evaluation: no	Signal(s) updated: cyclic	Signal(s) valid from SW:
Signal state 1 or signal transition 0 -> 1	Program control ”Program test” is active. Axis disable is set internally for all axes (not spindles). Therefore the machine axes do not move when a part program block or a part program is being processed. The axis movements are simulated on the operator interface with changing axis position values. The axis position values for the display are generated from the calculated setpoints. The part program is processed in the normal way.	
Signal state 0 or signal transition 1 -> 0	Program control Program test is not active.	
Related to	IS ”Activate program test” IS ”Program test selected”	
Note for the reader:	802D sl Description of Functions: K1	

V3300 0003.0 Interface signal	Program status running Signal(s) from channel (NCK ---> PLC)	
Edge evaluation: no	Signal(s) updated: cyclic	Signal(s) valid from SW:
Signal state 1 or signal transition 0 -> 1	The part program has been started with IS ”NC start” and is running.	
Signal state 0 or signal transition 1 -> 0	- Program stopped by M00/M01 or NC Stop or mode change. - The block is executed in single-block mode. - End of program reached (M2) - Program abort by Reset - Current block cannot be processed	

Special cases, errors, ...	The IS "Program status running" does not change to 0 if workpiece machining is stopped by the following events: - Output of feed disable or spindle disable - IS "Read-in disable" - Feed override to 0% - Response of the spindle and axis monitoring
Note for the reader:	802D sl Description of Functions: K1

V3300 0003.2 Interface signal	Program status stopped Signal(s) from channel (NCK ---> PLC)	
Edge evaluation: no	Signal(s) updated: cyclic	Signal(s) valid from SW:
Signal state 1 or signal transition 0 -> 1	The NC part program has been stopped by ”NC stop”, ”NC stop axes plus spindles”, ”NC stop at block limit”, programmed M0 or M1 or single block mode.	
Signal state 0 or signal transition 1 -> 0	Program status ”stopped” is not active.	
Related to	IS ”NC Stop” IS ”NC Stop axes plus spindles” IS ”NC Stop at block limit”	
Note for the reader:	802D sl Description of Functions: K1	

V3300 0003.3 Interface signal	Program status interrupted Signal(s) from channel (NCK ---> PLC)	
Edge evaluation: no	Signal(s) updated: cyclic	Signal(s) valid from SW:
Signal state 1 or signal transition 0 -> 1	When changing from AUTOMATIC or MDA mode (when program has stopped) after JOG the program status switches to ”interrupted”. The program can be continued at the point of interruption in AUTOMATIC or MDA mode when ”NC start” is operated.	
Signal state 0 or signal transition 1 -> 0	Program status interrupted is not active.	
Special cases, errors, ...	IS ”Program status interrupted” signifies that the part program can be continued after an NC start.	
Note for the reader:	802D sl Description of Functions: K1	

V3300 0003.4 Interface signal	Program status aborted Signal(s) from channel (NCK -> PLC)	
Edge evaluation: no	Signal(s) updated: cyclic	Signal(s) valid from SW:
Signal state 1 or signal transition 0 -> 1	The program has been selected but not started or the current program was aborted with Reset.	
Signal state 0 or signal transition 1 -> 0	Program status interrupted is not active.	
Related to	IS ”Reset”	
Note for the reader:	802D sl Description of Functions: K1	

V3300 0003.5 Interface signal	Channel status active Signal(s) from channel (NCK -> PLC)	
Edge evaluation: no	Signal(s) updated: cyclic	Signal(s) valid from SW:
Signal state 1 or signal transition 0 -> 1	In this channel · a part program or block is currently being processed in AUTOMATIC or MDA mode or · at least one axis is being traversed in JOG mode.	
Signal state 0 or signal transition 1 -> 0	”Channel status interrupted” or ”Channel status Reset” is active.	
Note for the reader:	802D sl Description of Functions: K1	

V3300 0003.6 Interface signal	Channel status interrupted Signal(s) from channel (NCK ---> PLC)	
Edge evaluation: no	Signal(s) updated: cyclic	Signal(s) valid from SW:
Signal state 1 or signal transition 0--> 1	The NC part program in AUTOMATIC or MDA mode can be stopped by ”NC stop”, ”NC stop axes plus spindles”, ”NC stop at block limit”, programmed M0 or M1 or single block mode. With NC start the part program or the interrupted traversing movement can be continued.	
Signal state 0 or signal transition 1--> 0	”Channel status active” or ”Channel status Reset” is active.	
Note for the reader:	802D sl Description of Functions: K1	

V3300 0003.7 Interface signal	Channel status rese Signal(s) from channel (NCK ---> PLC)	
Edge evaluation: no	Signal(s) updated: cyclic	Signal(s) valid from SW:
Signal state 1 or signal transition 0 -> 1	The signal changes to 1 as soon as the channel goes into Reset status, i.e. no processing taking place.	
Signal state 0 or signal transition 1--> 0	The signal changes to 0 if processing is taking place in the channel, e.g. execution of a part program or block search	
Note for the reader:	802D sl Description of Functions: K1	

V3300 0004.2 Interface signal	All axes referenced Signal(s) from channel (PLC -> NCK)	
Edge evaluation: no	Signal(s) updated: cyclic	Signal(s) valid from SW: 1.1
Signal state 1 or signal transition 0 -> 1	All axes referenced. (Note for axes requiring referencing: MD 34110: REFP_CYCLE_NR, MD 20700: REFP_NC_START_LOCK)	
Signal state 0 or signal transition 1 -> 0	One or more axes on the channel have not been referenced.	
Special cases, errors, ...	The spindles of the channel have no effect on this interface signal.	
Related to	”Referenced/synchronizing 1” interface signal (V390x 0000.4)	
Note for the reader:	802D sl Description of Functions: R1	

V3300 0004.3 Data block	All axes stationary Signal(s) from channel (NCK -> PLC)	
Edge evaluation: no	Signal(s) updated: cyclic	Signal(s) valid from SW:
Signal state 1 or signal transition 0 -> 1	All axes assigned to the channel are stationary with interpolator end. No other traversing movements are active.	
Note for the reader:	802D sl Description of Functions: B1	

V3300 0006.0 Interface signal	Stroke initiation active Signal(s) from channel (NCK -> PLC)	
Edge evaluation:	Signal(s) updated:	Signal(s) valid from SW release:
Signal status 1 or signal transition 0 -> 1	This signal indicates an active stroke initiation. 1-signal: The stroke initiation is active.	
Signal status 0 or signal transition 1 -> 0	0-signal: The stroke initiation is not active.	

V3300 0006.1 Interface signal	Acknowledgment of manual stroke initiation Signal(s) from channel (NCK -> PLC)	
Edge evaluation:	Signal(s) updated:	Signal(s) valid from SW release:
Signal status 1 or signal transition 0 -> 1	This signal indicates whether a manual stroke was initiated. 1-signal: A manual stroke was initiated.	
Signal status 0 or signal transition 1 -> 0	0-signal: No manual stroke was initiated.	

V3300 0008 V3300 0009 Interface signal	Machine-related protection zone 1 (...10) preactivated Signal(s) from the channel (NCK ---> PLC)
Edge evaluation: no	Signal(s) updated: cyclically
Signal status 1 or edge transition --> 0 ->1	The machine-related protection zone 1 (...10) is preactivated in the current block. (The preactivation was performed in the part program.) Thus, the protection zone can be activated or deactivated in the PLC user program using the interface signal DB21, ... DBX8.0 - DBX9.1 (”Activate machine-related protection zone 1 (...10)”).
Signal status 0 or edge transition --> 1 -> 0	The machine-related protection zone 1 (...10) is deactivated in the current block. (The deactivation was performed in the part program.) Thus, the protection zone can be deactivated or set inactive in the PLC user program using the interface signal DB21, ... DBX8.0 - DBX9.1 (”Activate machine-related protection zone 1 (...10)”).
Related to	DB21, ... DBX8.0 - DBX9.1 (”Activate machine-related protection zone 1 (...10)”).

V3300 0010 V3300 0011 Interface signal	Channel-specific protection zone 1 (...10) preactivated Signal(s) from the channel (NCK ---> PLC)
Edge evaluation: no	Signal(s) updated: cyclically
Signal status 1 or edge transition --> 0 -> 1	The channel-specific protection zone 1 (...10) is preactivated in the current block. (The preactivation was performed in the part program.) Thus, the protection zone can be activated or deactivated in the PLC user program using the interface signal DB21, ... DBX10.0 - DBX11.1 (”Activate channel-specific protection zone 1 (...10)”).
Signal status 0 or edge transition --> 1 -> 0	The channel-specific protection zone 1 (...10) is deactivated in the current block. (The deactivation was performed in the part program.) Thus, the protection zone can be deactivated or set inactive in the PLC user program using the interface signal DB21, ... DBX10.0 - DBX11.1 (”Activate channel-specific protection zone 1 (...10)”).
Related to ... with	DB21, ... DBX10.0 - DBX11.1 (”Activate channel-specific protection zone 1 (...10)”).

V3300 0012 V3300 0013 Interface signal	Machine-related protection zone 1 (...10) violated Signal(s) from the channel (NCK ---> PLC)
Edge evaluation: no	Signal(s) updated: cyclically
Signal status 1 or edge transition --> 0 -> 1	The activated, machine-related protection zone 1 (...10) is violated in the current block or in the current JOG motion. The preactivated, machine-related protection zone 1 (...10) would be violated in the current block if it would be set active by the PLC.
Signal status 0 or edge transition --> 1 -> 0	The activated, machine-related protection zone 1 (...10) is not violated in the current block. The preactivated, machine-related protection zone 1 (...10) would not be violated in the current block if it would be set active by the PLC.
Application example(s)	This interface signal (IS) can be used to check before swinging parts into the work space whether the tool or the workpiece is in the machine-related protection zone of the part to be swung in.

V3300 0014 V3300 0015 Interface signal	Channel-specific protection zone 1 (...10) violated Signal(s) from the channel (NCK ---> PLC)
Edge evaluation: no	Signal(s) updated: cyclically
Signal status 1 or edge transition --> 0 -> 1	The activated, channel-specific protection zone 1 (...10) is violated in the current block. The preactivated, channel-specific protection zone 1 (...10) would be violated in the current block if it would be set active by the PLC.
Signal status 0 or edge transition --> 1 -> 0	The activated, channel-specific protection zone 1 (...10) is not violated in the current block. The preactivated, channel-specific protection zone 1 (...10) would not be violated in the current block if it would be set active by the PLC.
Application example(s)	This interface signal (IS) can be used to check before swinging parts into the work space whether the tool or the workpiece is in the channel-specific protection zone of the part to be swung in.

V3300 1000.0 to .1 V3300 1004.0 to .1 V3300 1008.0 to .1 Interface signal	Handwheel active (1 to 2) for geometry axis 1 for geometry axis 2 for geometry axis 3 Signal(s) from channel (NCK -> PLC)	
Edge evaluation: no	Signal(s) updated: cyclic	Signal(s) valid from SW:
Signal state 1 or signal transition 0 -> 1	These PLC interface signals report whether this geometry axis is assigned to handwheel 1, 2 or 3 or to no handwheel. Only one handwheel can be assigned to an axis at any one time. If several ”Activate handwheel” interface signals are set, priority ”Handwheel 1” before ”Handwheel 2” before ”Handwheel 3” applies. If the assignment is active, the geometry axis can be traversed with the handwheel in JOG mode.	
Signal state 0 or signal transition 1 -> 0	Neither handwheel 1, 2 nor 3 is assigned to this geometry axis.	
Related to	IS ”Activate handwheel” (V3200 1000.0 to .2, V3200 1004.0 to .2, V3200 1008.0 to .2)	
Note for the reader:	802D sl Description of Functions: H1	

V3300 1000.7 and .6 V3300 1004.7 and .6 V3300 1008.7 and .6 Interface signal	Travel command plus and minus for geometry axis for geometry axis 1 for geometry axis 2 for geometry axis 3 Signal(s) from channel (NCK -> PLC)	
Edge evaluation: no	Signal(s) updated: cyclic	Signal(s) valid from SW:
Signal state 1 or signal transition 0 -> 1	A traverse movement of the axis is to be executed in one or the other direction. Depending on the mode selected, the command is triggered in different ways: · JOG mode: with the plus or minus traverse key · REF submode: with the traverse key that takes the axis to the reference point · AUTO/MDA mode: the program block containing a coordinate value for the axis in question is executed.	
Signal state 0 or signal transition 1 -> 0	A travel command in the relevant axis direction has not been given or a traverse movement has been completed. **JOG mode:** · Cancelation of traverse key · While ending traversing with the handwheel. **REF submode:** · When the reference point is reached **AUTO/MDA mode:** · The program block has been executed (and the next block does not contain any coordinate values for the axis in question) · Abort with ”RESET”, etc. · IS ”Axis disable” is active	
Application example(s)	To release clamping of axes with clamping **Note**: If the clamping is not released until the travel command is given, these axes cannot be operated under continuous path control!	

Related to	IS ”Traverse key plus” and ” ... minus” for geometry axis 1 (V3200 1000.7 and .6) for geometry axis 2 (V3200 1004.7 and .6) for geometry axis 3 (V3200 1008.7 and .6)
Note for the reader:	802D sl Description of Functions: H1

	Active machine function INC1, ..., continuous	
V3300 1001.0, ..., .6 V3300 1005.0, ..., .6 V3300 1009.0, ..., .6	for geometry axis 1 for geometry axis 2 for geometry axis 3	
Interface signal	Signal(s) from channel (NCK -> PLC)	
Edge evaluation: no	Signal(s) updated: cyclic	Signal(s) valid from SW:
Signal state 1 or signal transition 0 -> 1	The PLC interface receives a signal stating which JOG mode machine function is active for the geometry axes.	
Signal state 0 or signal transition 1 -> 0	The machine function in question is not active.	
Related to	IS ”Machine function INC1, ..., continuous” for geometry axis 1 (V3200 1001.0 ... .6) for geometry axis 2 (V3200 1005.0 ... .6) for geometry axis 3 (V3200 1009.0 ... .6)	
Note for the reader:	802D sl Description of Functions: H1	

V3300 4001.1	Workpiece setpoint reached	
Interface signal	Signal(s) from channel (NCK ---> PLC)	
Edge evaluation: no	Signal(s) updated: cyclic	Signal(s) valid from SW:
Signal state 1 or signal transition 0 -> 1	The required number of workpieces is reached. According to setting in MD 27880: PART_COUNTER: Bit 1 = 0: when $AC_REQUIRED_PARTS equal to $AC_ACTUAL_PARTS Bit 1 = 1: when $AC_REQUIRED_PARTS equal to $AC_SPECIAL_PARTS	
Signal state 0 or signal transition 1 -> 0	The required number of workpieces is not reached.	
Note for the reader:	802D sl Description of Functions: K1	

5.7 Axis-/spindle-specific signals

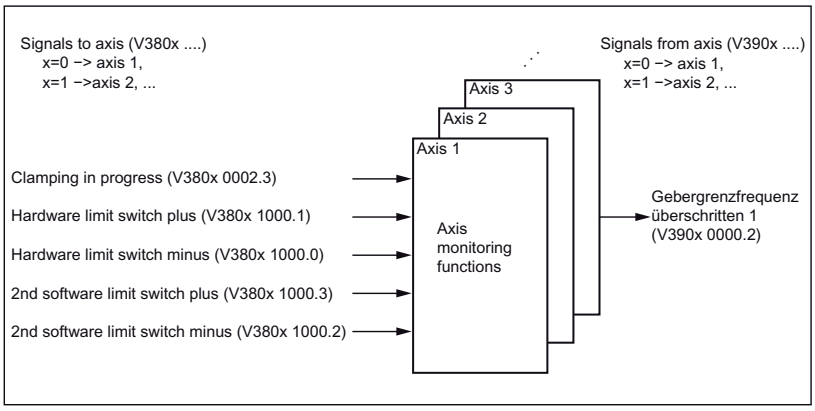

PLC interface signals for axis monitoring functions

5.7.1 Transferred axis-specific M and S functions

VD370x 0000 Interface signal	M function for spindle Signals from axis/spindle (NCK -> PLC), axis-specific	
Edge evaluation:	Signal(s) updated: cyclic	Signal(s) valid from SW:
	Generally the M functions are output in V2500... channel-specific. In the V25001... range these only remain valid for one PLC cycle; in V25003... until a new function is output. In this IS "M function for spindle" **selected spindle M functions** are available to the PLC as a current integer value. · M3 > value: 3 · M4 > value: 4 · M5 > value: 5	
Related to	specific IS auxiliary function transfer from NC channel (V2500...)	
Note for the reader:	802D sl Description of Functions: S1	

VD370x 0004 Interface signal	S function for spindle Signals from axis/spindle (NCK -> PLC), axis-specific	
Edge evaluation:	Signal(s) updated: cyclic	Signal(s) valid from SW:
	Generally the S function is transferred to the PLC channel-specific in VD2500 4000 as a floating point value. In this IS îS function for spindleî the floating point value is output to the PLC on an axis-specific basis: · S.... as the spindle speed in rpm (programmed value) · S.... as the constant cutting speed in m/min or ft/min for G96 The following S functions are **not** output here: · S.... as the programmed Spindle speed limiting G25 · S.... as the programmed Spindle speed limiting G26 · S.... as the dwell time in spindle revolutions	
Related to	specific	
Note for the reader:	802D sl Description of Functions: S1	

5.7.2 Signals to axis/spindle

VB380x 0000 Interface signal	Feedrate override (axis-specific) Signal(s) to axis (PLC → NCK)		
Edge evaluation: no	Signal(s) updated: cyclic		Signal(s) valid from SW:
Signal state 1 or signal transition 0 -> 1	The axis-specific feedrate override is defined via the PLC in gray coding. Gray coding for axis-specific feedrate override		
	Switch position	Code	Axial feedrate over ride factor
	1	00001	0.0
	2	00011	0.01
	3	00010	0.02
	4	00110	0.04
	5	00111	0.06
	6	00101	0.08
	7	00100	0.10
	8	01100	0.20
	9	01101	0.30
	10	01111	0.40
	11	01110	0.50
	12	01010	0.60
	13	01011	0.70
	14	01001	0.75
	15	01000	0.80
	16	11000	0.85
	17	11001	0.90
	18	11011	0.95
	19	11010	1.00
	20	11110	1.05
	21	11111	1.10
	22	11101	1.15
	23	11100	1.20
	24	10100	1.20
	25	10101	1.20
	26	10111	1.20
	27	10110	1.20
	28	10010	1.20
	29	10011	1.20
	30	10001	1.20
	31	10000	1.20
Related to	IS ”Override active” (V380x 0001.7)		
Note for the reader:	802D sl Description of Functions: V1		

V380x 0001.1 Interface signal	Acknowledge fixed stop reached Signal(s) to axis/spindle (PLC → NCK)	
Edge evaluation: no	Signal(s) updated: cyclic	Signal(s) valid from SW:
Signal state 1 or signal transition 0 -> 1	Meaning after the fixed stop has been reached IS "Fixed stop reached" = 1 → The axis pushes against the fixed stop with the clamping torque → The fixed stop monitoring window is activated → A block change is performed.	
Signal state 0 Edge change 1->0	Meaning after the fixed stop has been reached IS "Fixed stop reached" = 1 → The axis pushes against the fixed stop with the clamping torque → The fixed stop monitoring window is activated → **No** block change is performed and channel alarm "Wait: Auxiliary function acknowledgment missing" is displayed. Meaning once the fixed stop has been reached: IS "Fixed stop reached" = 1 The function is aborted, the alarm "20094 axis %1 Function aborted" is displayed. Meaning when function is deselected "FXS = 0" via part program: Torque limiting and monitoring of the fixed stop window are canceled.	
IS irrelevant for	MD 37060: FIXED_STOP_ACKN_MASK (monitoring of PLC acknowledgments for travel to fixed stop) = 0 or 1 (for values >1, however)	
Related to	MD 37060: FIXED_STOP_ACKN_MASK (monitoring of PLC acknowledgments for travel to fixed stop) IS "Fixed stop reached"	
Note for the reader:	802D sl Description of Functions: F1	

V380x 0001.2 Interface signal	Sensor for fixed stop Signal(s) to axis/spindle (PLC → NCK)	
Edge evaluation: no	Signal(s) updated: cyclic	Signal(s) valid from SW:
Signal state 1 or signal transition 0 -> 1	Fixed stop is reached.	
Signal state 0 or signal transition 1 -> 0	Fixed stop is not reached.	
Related to	The signal is effective only if MD 37040: FIXED_STOP_BY_SENSOR is set to 1.	
Note for the reader:	802D sl Description of Functions: F1	

V380x 0001.7 Interface signal	Override active Signal(s) to axis/spindle (PLC → NCK)	
Edge evaluation: no	Signal(s) updated: cyclic	Signal(s) valid from SW:
Signal state 1 or signal transition 0 -> 1	Feedrate override active (for axes): · The axis-specific feedrate override between 0 and a maximum of 120% entered in the PLC interface is used. Spindle override active (for spindle): · The spindle override of 50 to a maximum of 120% is used.	

Signal state 0 or signal transition 1 -> 0	The existing axis-specific feedrate override or spindle override is not active. If the feedrate override is inactive, 100% is used as the internal override factor. **Note:** coded interface for the value represents a special case. In this case, the override factor of the 1st switch position is also used with ”Override inactive” and **0%** is issued for the override value for axes (acts the same as ”Feed disable”); accordingly 50%, is issued for the spindle.
Special cases, errors, ...	· The spindle override is always accepted with 100% in the spindle ”Oscillation mode”. · The spindle override acts on the programmed values before the limits (e.g. G26) intervene. · The feedrate override is inactive if G33 is active.
Related to	IS ”Feedrate override” and IS ”Spindle override”
Note for the reader:	802D sl Description of Functions: V1

V380x 0002.0 Interface signal	Cam activation Signal(s) to axis/spindle (PLC --> NCK)	
Edge evaluation: no	Signal(s) updated: cyclically	Signal(s) valid from SW release: 2.1
Signal status 1 or signal transition 0 -> 1	The output of the minus and plus cam signals of an axis to the general PLC interface is activated. The activation comes immediately into effect after processing of the IS ”Cam activation” in the NCK.	
Signal status 0 or signal transition 1 -> 0	The minus and plus cam signals of an axis are **not** output to the general PLC interface.	
Related to	IS "Minus cam signal 1-32” (V2700 0004.0 bis .7) IS "Plus cam signal 1-32” (V2700 0008.0 to .7)	

V380x 0002.2 Interface signal	Spindle reset/Delete distance-to-go Signal(s) to axis/spindle (PLC -> NCK)	
Edge evaluation: yes	Signal(s) updated: cyclic	Signal(s) valid from SW:
Edge change 0 -> 1	Independent of MD 35040: SPIND_ACTIVE_AFTER_RESET, spindle reset has the following effects for the different spindle modes: Open-loop control mode: - Spindle stops - Program continues running - Spindle continues to run with subsequent M and S programcommands Oscillation mode: - Oscillation is aborted - Axes continue to run - Program is continued with current gear stage - With a subsequent M value and a higher S value, IS "Setpoint speed limited" (V390x 2001.1) is set if necessary. Positioning mode: - is stopped	

Signal state 0 or signal transition 1 -> 0	No effect
Related to	MD 35040: SPIND_ACTIVE_AFTER_RESET (own spindle reset) IS "Reset" (V300 00000.7) IS "Delete distance-to-go" (V380x 0002.2) is another name for the same signal; however, it applies to each axis.
Note for the reader:	802D sl Description of Functions: S1

V380x 0002.3 Data block	Clamping in progress Signal(s) to axis/spindle (PLC ---> NCK)	
Edge evaluation: no	Signal(s) updated: cyclic	Signal(s) valid from SW:
Signal state 1 or signal transition 0 -> 1	Clamping in progress The clamping monitoring function is activated.	
Signal state 0 or signal transition 1 -> 0	speed monitoring function takes over from the clamping monitoring function.	
Related to	MD 36050: CLAMP_POS_TOL (clamping tolerance)	
Note for the reader:	802D sl Description of Functions: A3	

V380x 0003.1 Interface signal	Enable travel to fixed stop Signal(s) to axis/spindle (PLC ---> NCK)	
Edge evaluation: no	Signal(s) updated: cyclic	Signal(s) valid from SW:
Signal state 1 or signal transition 0 -> 1	Meaning when ”FXS” function is selected via part program, (IS ”Activate travel to fixed stop” = 1): Travel to fixed stop is enabled and the axis traverses from the start position at the programmed velocity to the programmed target position.	
Signal state 0 Edge change 1->0	Meaning when ”FXS” function is selected via part program, (IS ”Activate travel to fixed stop” = 1): → Travel to fixed stop is disabled. → The axis is at the start position with reduced torque. → Channel alarm ”Wait: Auxiliary function acknowledgment missing” is displayed. Meaning **before** the fixed stop has been reached IS ”Fixed stop reached” = 0 → Travel to fixed stop is aborted → Alarm ”20094: axis%1 Function aborted” is displayed Meaning **once** fixed stop has been reached IS ”Fixed stop reached” = 1. Torque limiting and the monitoring of the fixed stop monitoring window are canceled.	
IS irrelevant for	MD 37060: FIXED_STOP_ACKN_MASK (monitoring of PLC acknowledgments for travel to fixed stop) = 0 or 2	
Related to	MD 37060: FIXED_STOP_ACKN_MASK (monitoring of PLC acknowledgments for travel to fixed stop) IS ”Activate travel to fixed stop”	
Note for the reader:	802D sl Description of Functions: F1	

V380x 0003.6 Data block	Velocity/spindle speed limitation Signal(s)	
Edge evaluation: no	Signal(s) updated: cyclic	Signal(s) valid from SW:
Signal state 1 or signal transition 0 -> 1	The NCK limits the velocity/spindle speed to the limit value set in MD 35160: SPIND_EXTERN_VELO_LIMIT.	
Signal state 0 or signal transition 1 -> 0	No limiting active.	
Related to	MD 35100: SPIND_VELO_LIMIT (max. spindle speed) SD 43220: SPIND_MAX_VELO_G26 (prog. spindle speed limiting G26) SD 43230: SPIND_MAX_VELO_LIMIT (prog. spindle speed limiting G96)	
Note for the reader:	802D sl Description of Functions: A3	

V380x 0004.0 to .1 Interface signal	Activate handwheel (1 to 2) Signal(s) to axis/spindle (PLC -> NCK)	
Edge evaluation: no	Signal(s) updated: cyclic	Signal(s) valid from SW:
Signal state 1 or signal transition 0 -> 1	This PLC interface signal defines whether this machine axis is assigned to handwheel 1, 2 or no handwheel. Only one handwheel can be assigned to an axis at any one time. If several ”Activate handwheel” interface signals are set, priority ”Handwheel 1” before ”Handwheel 2” applies. If the assignment is active, the machine axis can be traversed with the handwheel in JOG mode.	
Signal state 0 or signal transition 1 -> 0	Neither handwheel 1, 2 is assigned to this geometry axis.	
Application example(s)	The PLC user program can use this interface signal to disable the influence of turning the handwheel on the axis.	
Related to	IS ”Handwheel active” 1 to 2 (V390x 0004.0 to .1)	
Note for the reader:	802D sl Description of Functions: H1	

V380x 0004.3 Interface signal	Feed stop/Spindle stop (axis-specific) Signal(s) to axis/spindle (PLC → NCK)	
Edge evaluation: no	Signal(s) updated: cyclic	Signal(s) valid from SW:
Signal state 1 or signal transition 0 -> 1	The signal is active in all modes. Feed stop: · The signal triggers a feed stop for the axis. Traversing axes are brought to a standstill under controlled braking (ramp stop). No alarm is output. · The signal triggers a feed stop for all path axes interpolating relative to each other when the ”Feed stop” is activated for any one of these axes. In this case, **all the axes** are brought to a stop with adherence to the path contour. When the feed stop signal is canceled, execution of the interrupted part program is resumed. · The position control is retained, i.e. the following error is eliminated. · If a travel request is issued for an axis with an active ”Feed stop”, the request is retained. This pending travel request is executed immediately when ”Feed stop” is canceled. If the axis is interpolating in relation to others, this also applies to these axes. Spindle stop: · The spindle is brought to a standstill along the acceleration characteristic. · In positioning mode, activation of the ”Spindle stop” signal interrupts the positioning process. The above response applies with respect to individual axes.	
Signal state 0 or signal transition 1 -> 0	Feed stop: · The feedrate is enabled for the axis. · If a travel request (”Travel command”) is active when the ”Feed stop” is canceled, this is executed immediately. Spindle stop: · The speed is enabled for the spindle. · The spindle is accelerated to the previous speed setpoint with the acceleration characteristic or, in positioning mode, positioning is resumed.	
Application example(s)	Feed stop: · The traversing motion in the machine axes is not started when ”Feed stop” is active, if, for example, certain operating states that do not permit axis motion (e.g. door not closed) prevail. Spindle stop: · Change a tool	
Special cases, errors, ...		
Note for the reader:	802D sl Description of Functions: V1	

V380x 0004.4 Interface signal	Traverse key disable Signal(s) to axis/spindle (PLC -> NCK)	
Edge evaluation: no	Signal(s) updated: cyclic	Signal(s) valid from SW:
Signal state 1 or signal transition 0 -> 1	The traverse keys plus and minus have no effect on the machine axes in question. It is thus not possible to traverse the machine axis in JOG with the traverse keys on the machine control panel. If the traverse key disable is activated during a traverse movement, the machine axis is stopped.	
Signal state 0 or signal transition 1 -> 0	Traverse keys plus and minus are enabled.	
Application example(s)	It is thus possible, depending on the operating mode, to disable manual traverse of the machine axis in JOG mode with the traverse keys from the PLC user program.	
Related to	IS ”Traverse key plus” and ”Traverse key minus” (V380x 0004.7 and .6)	
Note for the reader:	802D sl Description of Functions: H1	

V380x 0004.5 Interface signal	Rapid traverse override Signal(s) to axis/spindle (PLC -> NCK)	
Edge evaluation: no	Signal(s) updated: cyclic	Signal(s) valid from SW:
Signal state 1 or signal transition 0 -> 1	If interface signal "Rapid traverse override" is set together with "Traverse key plus"and "Traverse key minus", the machine axis in question traverses at rapid traverse. The rapid traverse velocity is defined in MD 32010: JOG_VELO_RAPID. Rapid traverse override is active in the following JOG modes: · Continuous jogging · Incremental jogging If rapid traverse override is active, the velocity can be modified with the axis-specific feedrate override switch.	
Signal state 0 or signal transition 1 -> 0	The machine axis traverses at the defined JOG velocity (SD 41110: JOG_SET_VELO or SD 41130, or MD 32020: JOG_VELO).	
Signal irrelevant for	· Operating modes AUTOMATIC and MDA · Reference point approach (JOG mode)	
Related to	IS ”Traverse key plus” and ”Traverse key minus” (V380x 0004.7 and .6) specific ”Feedrate override” (VB380x 0000)	
Note for the reader:	802D sl Description of Functions: H1	

V380x 0004.7 and .6 Interface signal	Plus and minus traverse keys Signal(s) to axis/spindle (PLC -> NCK)	
Edge evaluation: yes	Signal(s) updated: cyclic	Signal(s) valid from SW:
Signal state 1 or signal transition 0 -> 1	The selected axis can be traversed in both directions in JOG mode with the traverse keys plus and minus. **Incremental traversing** With signal 1 the axis starts to traverse at the set increment. If the signal changes to the 0 state before the increment is traversed, the traversing movement is interrupted. When signal state 1 occurs again, the traverse motion is restarted. The traversing motion of the axis can be stopped and restarted multiple times as described above until the increment has been fully traversed. **Continuous traversing** If no INC measure is selected but ”continuous” is, the axis travels for as long as the traverse key is actuated. If both traverse signals (plus and minus) are set at the same time there is no movement or a current movement is aborted. The effect of the traverse keys can be disabled for every axis individually with the PLC interface signal ”Traverse key disable”.	
Signal state 0 or signal transition 1 -> 0	No traverse	
Signal irrelevant for	Operating modes AUTOMATIC and MDA	
Application example(s)	specific PLC interface (as a geometry axis). Alarm 20062 is signaled.	
Special cases, ...	Indexing axes	
Related to	IS ”Traverse key plus” and ” ... minus” for geometry axis 1 (V3200 1000.7 and .6) for geometry axis 2 (V3200 1004.7 and .6) for geometry axis 3 (V3200 1008.7 and .6) IS ”Traverse key disable” (V380x 0004.4)	
Note for the reader:	802D sl Description of Functions: H1	

V380x 0005.0 to .6 Interface signal	Machine functions INC1, INC10, INC100, INC1000, INC10000, INCvar, continuous Signal(s) to axis/spindle (PLC -> NCK)	
Edge evaluation: no	Signal(s) updated: cyclic	Signal(s) valid from SW:
Signal state 1 or signal transition 0 -> 1	This input range is only used if IS ”INC inputs in mode group range active” (V2600 0001.0) is **not set**. The interface signals ”INC...” define how many increments the machine axis traverses when the traverse key is pressed or the handwheel is turned one detent position. JOG must be active. With ”INCvar” the value in the general SD 41010: JOG_VAR_INCR_SIZE applies. In ”continuous” mode the associated axis can be traversed with the plus or minus traversing key according to how the traverse key is pressed. As soon as the selected machine function becomes active, this is signaled to the PLC interface (IS ”Active machine function INC1...”). If several machine function signals (INC1, INC... or ”Continuous jogging”) are selected at the interface simultaneously, no machine function is activated by the control. **Note:** The input IS ”INC...” or ”continuous” for changing an active machine function must be active for at least one PLC cycle. A static application is not required.	
Signal state 0 or signal transition 1 -> 0	The machine function in question is not selected. No change to the active machine function is requested. If an axis is currently traversing an increment, this movement is also aborted if this machine function is deselected or changed over.	
Related to	IS ”Active machine function INC1, ...” (V390x 0005.0 ... .6) IS ”INC inputs in the mode group area active” (V2600 0001.0)	
Note for the reader:	802D sl Description of Functions: H1	

V380x 1000.1 and .0 Data block	Hardware limit switches plus and minus Signal(s) to axis/spindle (PLC ---> NCK)	
Edge evaluation: no	Signal(s) updated: cyclic	Signal(s) valid from SW:
Signal state 1 or signal transition 0 -> 1	A switch can be mounted at each end of the travel range of a machine axis which will cause a signal ”Hardware limit switch plus or minus” to be signaled to the NC via the PLC if it is approached. If the signal is recognized as set, alarm 021614 ”Hardware limit switch + or -” is output and the axis is decelerated immediately. The braking mode is defined in MD 36600: BRAKE_MODE_CHOICE (deceleration behavior on hardware limit switch).	
Signal state 0 or signal transition 1 -> 0	Normal condition, hardware limit switch not triggered.	
Related to	MD 36600: BRAKE_MODE_CHOICE (deceleration behavior on hardware limit switch)	
Note for the reader:	802D sl Description of Functions: A3	

V380x1000.3 or .2 Data block	2nd software limit switch plus or minus Signal(s) to axis/spindle (PLC ---> NCK)	
Edge evaluation: no	Signal(s) updated: cyclic	Signal(s) valid from SW:
Signal state 1 or signal transition 0 -> 1	2nd software limit switch for the plus or minus direction is active. 1st software limit switch for the plus or minus direction is not active. The 2nd software limit switches (plus and minus) can be activated in addition to the 1st software limit switches (plus and minus) via this interface signal. The position is defined by MD 36130: POS_LIMIT_PLUS2, MD 36120: POS_LIMIT_MINUS2 (2nd software limit switch plus, 2nd software limit switch minus).	
Signal state 0 or signal transition 1 -> 0	1st software limit switch for the plus or minus direction is active. 2nd software limit switch for the plus or minus direction is not active.	
Related to	MD 36110: POS_LIMIT_PLUS, MD 36130: POS_LIMIT_PLUS2, MD 36100: POS_LIMIT_MINUS, MD 36120: POS_LIMIT_MINUS2, (software limit switch plus, software limit switch minus)	
Note for the reader:	802D sl Description of Functions: A3	

V380x1000.7 Interface signal	Reference point approach delay Signal(s) to axis/spindle (PLC -> NCK)	
Edge evaluation: no	Signal(s) updated: cyclic	Signal(s) valid from SW:
Signal state 1 or signal transition0 -> 1	The machine axis is positioned at the reference cam.	
Signal state 0 or signal transition 1 -> 0	The machine axis is positioned in front of the reference cam. A reference cam of appropriate length (to the end of the traversing range) has been used to prevent the machine axis from being positioned behind the referencing cam.	
Related to		
Note for the reader:	802D sl Description of Functions: R1	

V380x 2000.0 to .2 Interface signal	Actual gear stage A to C Signal(s) to axis/spindle (PLC -> NCK)	
Edge evaluation: yes	Signal(s) updated: cyclic	Signal(s) valid from SW:
	When the new gear is engaged, the IS ”Actual gear stage A to C” and ”Gear changed” are enabled by the PLC user. This informs the NCK that the correct gear stage has been successfully engaged. The gear change is complete (spindle oscillation mode is deselected), the spindle accelerates in the new gear stage to the last programmed spindle speed and the next block in the part program can be executed.	

Signal state 1 (level-operated)	The actual gear stage is specified in coded format (ABC values). A parameter set is used for each of the 5 gear stages and is assigned as follows: Parameter set no. / VDI code CBA / Data in data set / contents 0 / - / Data for axis mode / Servo gain factor, Monitoring functions 1 / 000 001 / Data for 1st gear stage / M40 speed, Min/max speed, Acceleration 2 / 010 / Data for 2nd gear stage / etc. 3 / 011 / Data for 3rd gear stage 4 / 100 / Data for 4th gear stage 5 / 101 / Data for 5th gear stage 110 111
Special cases, errors, ...	If the PLC user reports back to the NCK with a different actual gear stage than issued by the NCK as the set gear stage, the gear change is still treated as having been successfully completed and the actual gear stage A to C is activated.
Related to	IS ”Set gear stage A” to ”...C” (V390x 2000.0 to .2) IS ”Change gear” (V390x 2000.3) IS ”Gear changed” (V380x 2000.3) IS ”Oscillation speed” (V380x 2002.5) Parameter sets (MD) for gear stages.
Note for the reader:	802D sl Description of Functions: S1

V380x 2000.3 Interface signal	Gear changed Signal(s) to axis/spindle (PLC -> NCK)	
Edge evaluation: yes	Signal(s) updated: cyclic	Signal(s) valid from SW:
Signal state 1 or signal transition 0 -> 1	When the new gear is engaged, the IS ”Actual gear stage A to C” and ”Gear changed” are enabled by the PLC user. This informs the NCK that the correct gear stage has been successfully engaged. The gear stage change is complete (spindle oscillation mode is deselected), the spindle accelerates in the new gear stage to the last programmed spindle speed and the next block in the part program can be executed. The IS ”Change gear” is reset by the NCK, which causes the PLC user to reset the IS ”Gear changed”.	
Signal state 0 or signal transition 1 -> 0	No effect	
Signal irrelevant for	All spindle modes except oscillation mode	
Special cases, errors, ...	If the PLC user reports back to the NCK with a different actual gear stage than issued by the NCK as the set gear stage, the gear change is still treated as having been successfully completed and the actual gear stage A to C is activated.	
Related to	IS ”Actual gear stage A” to C” (V380x 2000.0 to .2) IS ”Set gear stage A” to ”...C” (V390x 2000.0 to .2) IS ”Change gear” (V390x 2000.3) IS ”Oscillation speed” (V380x 2002.5)	
Note for the reader:	802D sl Description of Functions: S1	

V380x 2001.0 Interface signal	Feedrate override for spindle valid (instead of spindle override) Signal(s) from axis/spindle (PLC -> NCK)	
Edge evaluation: yes	Signal(s) updated: cyclic	Signal(s) valid from SW:
Signal state 1 or signal transition 0 -> 1	The ”Feedrate override” value (VB380x 0000) is used for the spindle instead of the ”Spindle override” value.	
Signal state 0 or signal transition 1 -> 0	The ”Spindle override” value is used.	
Related to	IS Spindle override” (VB380x 2003) IS Feedrate override” (V380x 0000) IS Override active” (V380x 0001.7)	
Note for the reader:	802D sl Description of Functions: V1	

V380x 2001.4 Interface signal	Resynchronize spindle during positioning 1 Signal(s) to axis/spindle (PLC -> NCK)	
Edge evaluation: yes	Signal(s) updated: cyclic	Signal(s) valid from SW:
Signal state 1	The spindle must be resynchronized during positioning.	
Signal state 0 or signal transition 1 -> 0	No effect	
Signal irrelevant for	All spindle modes except for positioning mode	
Application example(s)	The spindle has an indirect measuring system and slipping may occur between the motor and the clamp. If the signal=1 when the positioning process is started, the old reference is deleted and the zero mark searched for again before the end position is approached.	
Related to	”Referenced/synchronizing 1” interface signal (V390x 0000.4)	
Note for the reader:	802D sl Description of Functions: S1	

V380x 2001.6 Interface signal	Invert M3/M4 Signal(s) to axis/spindle (PLC -> NCK)	
Edge evaluation: yes	Signal(s) updated: cyclic	Signal(s) valid from SW:
Signal state 1 or signal transition 0 -> 1	The direction of rotation of the spindle motor changes with the following functions: · M3 · M4 · M5 · SPOS from movement; not active for SPOS from standstill.	
Application example(s)	The machine has a selector switch for a vertical and horizontal spindle. The mechanical design incorporates **one gear wheel more** on the horizontal spindle than on the vertical spindle. The direction of rotation must therefore be changed on the vertical spindle if the spindle is always to rotate clockwise with M3.	
Note for the reader:	802D sl Description of Functions: S1	

V380x 2002.4 Interface signal	Oscillation via PLC Signal(s) to axis/spindle (PLC -> NCK)	
Edge evaluation: yes	Signal(s) updated: cyclic	Signal(s) valid from SW:
Signal state 1 or signal transition 0 -> 1	If the IS ”Oscillation via PLC” is **enabled**, the IS ”Oscillation speed” effects output of a speed only in conjunction with the IS ”Direction of rotation setpoint counter-clockwise and clockwise”. The oscillation, i.e. the continuous change of the direction of rotation, is performed by the PLC user with the IS ”Direction of rotation setpoint counter-clockwise and clockwise” (oscillation via PLC).	
Signal state 0 or signal transition 1 -> 0	If the IS ”Oscillation via PLC” is **not enabled**, the IS ”Oscillation speed” triggers automatic oscillation on the NCK. The two times for the directions of rotation are entered in MD 35440: SPIND_OSCILL_TIME_CW (oscillation time for M3 direction) SPIND_OSCILL_TIME_CW (oscillation time for M3 direction) and MD 35450: SPIND_OSCILL_TIME_CCW (oscillation time for M4 direction).	
Application example(s)	If the new gear stage cannot be engaged in spite of several attempts by the NCK, the system can be switched to oscillation via PLC. Both of the times can then be altered by the PLC user. This assures a reliable change of the gear stage, even with unfavorable gear wheel positions.	
Related to	MD 35440: SPIND_OSCILL_TIME_CW (oscillation time for direction M3) MD 35450: SPIND_OSCILL_TIME_CCW (oscillation time for M4 direction) IS ”Oscillation speed” (V380x 2002.5) IS ”Set direction of rotation counterclockwise” (V380x 2002.7) IS ”Set direction of rotation clockwise” (V380x 2002.6)	
Note for the reader:	802D sl Description of Functions: S1	

V380x 2002.5 Interface signal	Oscillation speed Signal(s) to axis/spindle (PLC -> NCK)	
Edge evaluation: no	Signal(s) updated: cyclic	Signal(s) valid from SW:
Signal state 1 or signal transition 0 -> 1	If the gear stage must be changed (IS ”Change gear” (V390x 2000.3) is enabled), the spindle changes to oscillation mode. The spindle decelerates to a standstill with different acceleration levels, according to the point when the IS ”Oscillation speed” (V380x 2002.5) was enabled: 1. The IS ”Oscillation speed” is enabled **before** the IS ”Change gear” is enabled by the NCK. The spindle is brought to a standstill with the acceleration during oscillation (MD: SPIND_OSCILL_ACCEL). Once the spindle is stationary, oscillation is immediately initiated. 2. The IS ”Oscillation speed” is enabled **after** the IS ”Change gear” is enabled by the NCK and when the spindle is stationary. The position controller is disabled. The spindle decelerates with the deceleration rate in speed controlled mode. After the IS ”Oscillation speed”is set, the spindle starts to oscillate with the oscillation acceleration (MD:SPIND_OSCILL_ACCEL). If the IS ”Oscillation via PLC” (V380x 2002.4) is **not enabled**, the IS ”Oscillation speed” triggers automatic oscillation on the NCK. The two times for the directions of rotation are entered in MD: in SPIND_OSCILL_TIME_CW (oscillation time for M3 direction) and SPIND_OSCILL_TIME_CCW (oscillation time for M4 direction). If the IS ”Oscillation via PLC” is **enabled**, the IS ”Oscillation speed” effects output of a speed only in conjunction with the IS ”Direction of rotation setpoint counter-clockwise and clockwise”. The oscillation, i.e. the continuous change of the direction of rotation, is performed by the PLC user with the IS ”Direction of rotation setpoint counter-clockwise and clockwise” (oscillation via PLC).	

Signal state 0 or signal transition 1 -> 0	The spindle does not oscillate.
Signal irrelevant for	All spindle modes except oscillation mode
Application example(s)	The oscillation speed is used to facilitate the engagement of a new gear stage.
Related to	IS ”Oscillation via the PLC” (V380x 2002.4) IS ”Set direction of rotation counterclockwise” (V380x 2002.7) IS ”Set direction of rotation clockwise” (V380x 2002.6)
Note for the reader:	802D sl Description of Functions: S1

V380x 2002.7 / .6 Interface signal	Setpoint direction of rotation, counter-clockwise/setpoint direction of rotation, clockwise Signal(s) to axis/spindle (PLC -> NCK)	
Edge evaluation: yes	Signal(s) updated: cyclic	Signal(s) valid from SW:
Signal state 1 or signal transition 0 -> 1	When the IS ”Oscillation via PLC” is enabled, the two IS ”Direction of rotation setpoint counterclockwise” and ”Direction of rotation setpoint clockwise” can be used to set the direction of rotation for the oscillation speed. The times for the oscillation movement of the spindle motor are defined by enabling the IS ”Direction of rotation setpoint counterclockwise and clockwise” for a corresponding length of time.	
Signal irrelevant for	All spindle modes except oscillation mode	
Application example(s)	See IS ”Oscillation via PLC”	
Special cases, errors, ...	· If both of the IS are enabled simultaneously, no oscillation speed is output. · If no IS are set, then an oscillation speed is not output.	
Related to	IS ”Oscillation via the PLC” (V380x 2002.4) IS ”Oscillation speed” (V380x 2002.5)	
Note for the reader:	802D sl Description of Functions: S1	

VB380x 2003 Interface signal	Spindle override Signal(s) to spindle (PLC → NCK)		
Edge evaluation: no		Signal(s) updated: cyclic	Signal(s) valid from SW:
Signal state 1 or signal transition 0 -> 1	The spindle override is defined via the PLC in gray coding. The override value determines the percentage of the programmed speed setpoint that is issued to the spindle. Gray coding for spindle override		

Schalter-einstellung	Code	Spindelkorrekturfaktor
1	00001	0.5
2	00011	0.55
3	00010	0.60
4	00110	0.65
5	00111	0.70
6	00101	0.75
7	00100	0.80
8	01100	0.85
9	01101	0.90
10	01111	0.95
11	01110	1.00
12	01010	1.05
13	01011	1.10
14	01001	1.10
15	01000	1.15
16	11000	1.20
17	11001	1.20
18	11011	1.20
19	11010	1.20
20	11110	1.20
21	11111	1.20
22	11101	1.20
23	11100	1.20
24	10100	1.20
25	10101	1.20
26	10111	1.20
27	10110	1.20
28	10010	1.20
29	10011	1.20
30	10001	1.20
31	10000	1.20

Related to	IS ”Override active” (V380x 0001.7) IS ”Feedrate override for spindle valid” (V380x 2001.0)
Note for the reader:	802D sl Description of Functions: V1

5.7.3 Signals from axis/spindle

V390x 0000.0 Interface signal	Spindle/no axis Signal(s) from axis/spindle (NCK -> PLC)	
Edge evaluation: yes	Signal(s) updated: cyclic	Signal(s) valid from SW:
Signal state 1 or signal transition 0 -> 1	The machine axis is operated as a spindle in the following spindle modes: · Control mode · Oscillation mode · Positioning mode · Thread drilling (tapping) without compensating chuck (rigid tapping) The IS to axis (V380x 1000 to V380x 1003) and from axis (V390x 1000 to V390x 1003) are invalid. The IS to spindle (V380x 2000 to V380x 2003) and from spindle (V380x 2000 to V380x 2003) are valid.	
Signal state 0 or signal transition 1 -> 0	The machine axis is operated as an axis The IS to axis (V380x 1000 to V380x 1003) and from axis (V390x 1000 to V390x 1003) are valid. The IS to spindle (V380x 2000 to V380x 2003) and from spindle (V380x 2000 to V380x 2003) are invalid.	
Application examples	If a spindle is sometimes also used as a rotary axis on a machine tool (turning machine with spindle/C axis or milling machine with spindle/rotary axis for rigid tapping), the ”Spindle/no axis” signal can be used to determine whether the machine axis is in axis mode or spindle mode.	
Note for the reader:	802D sl Description of Functions: S1	

V390x 0000.2 Data block	Encoder limit frequency exceeded 1 Signal(s) from axis/spindle (NCK -> PLC)	
Edge evaluation: no	Signal(s) updated: cyclic	Signal(s) valid from SW:
Signal state 1 or signal transition 0 -> 1	The axis velocity defined in MD 36300: ENC_FREQ_LIMIT (encoder limit frequency) has been exceeded. The reference point for the position measuring system concerned has been lost (IS: Referenced/synchronized is in signal state 0). Proper position closed loop control is no longer possible. The spindles continue to run with speed control. The axes are brought to a standstill with rapid stop (with open position control loop) along a speed setpoint ramp.	
Signal state 0 or signal transition 1 -> 0	The axis velocity defined in MD 36300: ENC_FREQ_LIMIT is no longer exceeded. For the edge change 1 -->, the encoder frequency must have dropped below the setting in MD 36302: ENC_FREQ_LIMIT_LOW (% value of MD 36300: ENC_FREQ_LIMIT).	
Note for the reader:	802D sl Description of Functions: A3	

V390x 0000.4 Interface signal	Referenced/synchronizing 1 Signal(s) from axis/spindle (NCK -> PLC)	
Edge evaluation:	Signal(s) updated:	Signal(s) valid from SW:
Signal state 1 or signal transition 0 -> 1	Axes: When, during a reference point approach, the machine axis has reached the reference point (incremental measurement systems) or target point (linear measuring system with distance-coded reference marks), the machine axis is deemed to have been referenced and the ”referenced/synchronizing 1” interface signal (depending on which position measurement system is active during referencing) is enabled. Spindles: A spindle is synchronized (zero mark crossed or BERO responded) after Power On after one spindle revolution at the latest.	
Signal state 0 or signal transition 1 -> 0	The machine axis/spindle with position measurement system 1 is not referenced/ synchronizing.	
Related to	”Position measuring system 1” interface signal (V380x 0000.5)	
Note for the reader:	802D sl Description of Functions: R1, S1	

V390x 0000.6 Data block	Position reached with exact stop coarse Signal(s) from axis/spindle (NCK -> PLC)	
Edge evaluation: no	Signal(s) updated: cyclic	Signal(s) valid from SW:
Signal state 1 or signal transition 0 -> 1	The axis is in the appropriate exact stop and no interpolator is active for the axis and · The control system is in the Reset mode (Reset key or end of program). · The axis was last programmed as a positioning spindle. · The path movement was stopped with NC Stop. · The spindle is in position-controlled mode and is stationary. · The axis is switched from speed-controlled to position-controlled mode with IS ”Position measuring system”.	
Signal state 0 or signal transition 1 -> 0	The axis is not in the appropriate exact stop or the interpolator is active for the axis or · The path movement was stopped with NC Stop. · The spindle is in the speed-controlled mode. · ”Parking mode” is active for the axis. · The axis is switched from the position-controlled to the speed-controlled mode with using the IS ”Position measuring system”.	
Signal irrelevant for		
Related to	MD 36000: STOP_LIMIT_COARSE (exact stop coarse)	
Note for the reader:	802D sl Description of Functions: B1	

V390x 0000.7 Data block	Position reached with exact stop fine Signal(s) from axis/spindle (NCK -> PLC)	
Edge evaluation: no	Signal(s) updated: cyclic	Signal(s) valid from SW:
Signal state 1 or signal transition 0 -> 1	See IS ”Position reached with exact stop coarse”	
Signal state 0 or signal transition 1 -> 0	See IS ”Position reached with exact stop coarse”	
Signal irrelevant for		
Related to	MD 36010: STOP_LIMIT_FINE (exact stop fine)	
Note for the reader:	802D sl Description of Functions: B1	

V390x 0002.3 Interface signal	Measurement active Signal(s) from axis/spindle (NCK → PLC)	
Edge evaluation: no	Signal(s) updated: cyclic	Signal(s) valid from SW:
Signal state 1 or signal transition 0 -> 1	The ”Measuring” function is active. This displays the current measurement status of the axis (measuring block with this axis is running).	
Signal state 0 or signal transition 1 -> 0	The ”Measuring” function is not active.	
Note for the reader:	802D sl Description of Functions: M5	

V390x 0002.4 Interface signal	Activate travel to fixed end stop Signal(s) from axis/spindle (NCK ! PLC)	
Edge evaluation: no	Signal(s) updated: cyclic	Signal(s) valid from SW:
Signal state 1 or signal transition 0 -> 1	The ”Travel to fixed stop function” is active.	
Signal state 0 or signal transition 1 -> 0	The ”Travel to fixed stop function” is not active.	
Note for the reader:	802D sl Description of Functions: F1	

V390x 0002.5 Interface signal	Fixed stop reached Signal(s) from axis/spindle (NCK ! PLC)	
Edge evaluation: no	Signal(s) updated: cyclic	Signal(s) valid from SW:
Signal state 1 or signal transition 0 -> 1	The fixed stop was reached after selection of the ”FXS” function.	
Signal state 0 or signal transition 1 -> 0	The fixed stop has still not been reached after selection of the ”FXS” function.	
Note for the reader:	802D sl Description of Functions: F1	

V390x 0004.0 to .2 Interface signal	Handwheel active (1 to 3) Signal(s) from axis/spindle (NCK -> PLC)	
Edge evaluation: no	Signal(s) updated: cyclic	Signal(s) valid from SW:
Signal state 1 or signal transition 0 ->1	These PLC interface signals provide feedback whether the machine axis is assigned to handwheel 1, 2, 3 or no handwheel. Only one handwheel can be assigned to an axis at any one time. If several ”Activate handwheel” interface signals are set, priority ”Handwheel 1” before ”Handwheel 2” before ”Handwheel 3” applies. If the assignment is active, the machine axis can be traversed with the handwheel in JOG mode.	
Signal state 0 or signal transition 1 ->0	Neither handwheel 1, 2 nor 3 is assigned to this geometry axis.	
Related to	IS ”Activate handwheel” (V380x 0004.0 to .2) IS ”Handwheel selected” from HMI (V1900 0003, ff)	
Note for the reader:	802D sl Description of Functions: H1	

V390x 0004.7 and .6 Interface signal	Plus and minus traverse keys Signal(s) from axis/spindle (NCK -> PLC)	
Edge evaluation: no	Signal(s) updated: cyclic	Signal(s) valid from SW:
Signal state 1 or signal transition 0 ->1	A traverse movement of the axis is to be executed in one or the other direction. Depending on the mode selected, the command is triggered in different ways: · JOG mode: with the plus or minus traverse key · REF submode: with the traverse key that takes the axis to the reference point · AUT/MDA mode: the program block containing a coordinate value for the axis in question is executed.	
Signal state 0 or signal transition 1-> 0	A travel command in the relevant axis direction has not been given or a traverse movement has been completed. **JOG mode:** · Cancelation of traverse key. · While ending traversing with the handwheel. · REF submode: When the reference point is reached **AUT/MDA mode:** · The program block has been executed (and the next block does not contain any coordinate values for the axis in question) · Abort with ”RESET”, etc. · IS ”Axis disable” is active	
Application example(s)	To release clamping of axes with clamping (e.g. on a rotary table). **Note**: If the clamping is not released until the travel command is given, these axes cannot be operated under continuous path control!	
Related to	IS ”Traverse key plus” and ”Traverse key minus” (V380x 0004.7 and .6)	
Note for the reader:	802D sl Description of Functions: H1	

V390x 0005.0, ..., .6 Interface signal	Active machine function INC1, ..., continuous Signal(s) from axis/spindle (NCK -> PLC)	
Edge evaluation: no	Signal(s) updated: cyclic	Signal(s) valid from SW:
Signal state 1 or signal transition 0 ->1	The PLC interface receives a signal stating which JOG mode machine function is active for the machine axes.	
Signal state 0 or signal transition 1 ->0	The machine function in question is not active.	
Related to	IS ”Machine function INC1,...,continuous” (V380x 0005.0, ..., .6)	
Note for the reader:	802D sl Description of Functions: H1	

V390x 2000.0 to .2 Interface signal	Set gear stage A to C Signal(s) from axis/spindle (NCK -> PLC)	
Edge evaluation: yes	Signal(s) updated: cyclic	Signal(s) valid from SW:
Signal state 1 or signal transition 0 ->1	A gear stage can be defined as follows: · Permanent definition in the part program (M41 to M45) · Automatic definition by the programmed spindle speed (M40) M41 to M45: · The gear stage can be permanently defined in the part program with M41 to M45. If the M41 to M45 commands select a gear stage which is not the same as the current (actual) gear stage, the IS ”Change gear” and the IS ”Set gear stage A to C” are enabled. M40: · M40 in the part program causes the gear stage to be selected automatically by the control. The control checks which gear stage is possible for the programmed spindle speed (S function). If a gear stage is identified that is not equal to the current (actual) gear stage, the ”Change gear” and ”Set gear stage A” to ”...C” interface signals are set. The set gear stage is output in coded format: 1st gear stage 0 0 0 (C B A) 1st gear stage 0 0 1 2nd gear stage 0 1 0 3rd gear stage 0 1 1 4th gear stage 1 0 0 5th gear stage 1 0 1 Invalid value 1 1 0 Invalid value 1 1 1	
Signal irrelevant for	Other spindle modes except oscillation mode	
Related to	IS ”Change gear” (V390x 2000.3) IS ”Actual gear stage A” to ”...C” (V380x 2000.0 to .2) IS ”Gear changed” (V380x 2000.3)	
Note for the reader:	802D sl Description of Functions: S1	

V390x 2000.3 Interface signal	Change gear stage Signal(s) from axis/spindle (NCK -> PLC)	
Edge evaluation: yes	Signal(s) updated: cyclic	Signal(s) valid from SW:
Signal state 1 or signal transition 0 ->1	A gear stage can be defined as follows: · Permanent definition in the part program (M41 to M45) · Automatic definition by the programmed spindle speed (M40) **M41 to M45:** · The gear stage can be permanently defined in the part program with M41 to M45. If the M41 to M45 commands select a gear stage which is not the same as the current (actual) gear stage, the IS ”Change gear” and the IS ”Set gear stage A to C” are enabled. **M40:** · M40 in the part program causes the gear stage to be selected automatically by the control. The control checks which gear stage is possible for the programmed spindle speed (S function). If a gear stage is identified that is not equal to the current (actual) gear stage, the ”Change gear” and ”Set gear stage A” to ”...C” interface signals are set. · While the signal = 1, the text ”Wait for gear stage change” is displayed in the channel operating message”.	
Special cases, errors, ...	The IS ”Change gear” is only enabled when a new gear stage is selected that is **not equal** to the current actual gear stage.	
Related to	IS ”Set gear stage A” to C”(V390x 2000.0 to .2) IS ”Actual gear stage A” to ”...C” (V380x 2000.0 to .2) IS ”Gear changed” (V380x 2000.3)	
Note for the reader:	802D sl Description of Functions: S1	

V390x 2001.0 Interface signal	Speed limit exceeded Signal(s) from axis/spindle (NCK -> PLC)	
Edge evaluation: yes	Signal(s) updated: cyclic	Signal(s) valid from SW:
Signal state 1 or signal transition 0 ->1	If the actual speed exceeds the maximum spindle speed MD 35100: SPIND_VELO_ LIMIT by more than the spindle speed tolerance MD 35150: SPIND_DES_VELO_TOL the IS ”Speed limit exceeded” is enabled and alarm 22050 ”Maximum speed reached” is output. All axes and spindles of the channel are brought to a standstill.	
Related to	MD 35150: SPIND_DES_VELO_TOL (spindle speed tolerance) MD 35100: SPIND_VELO_LIMIT (maximum spindle speed) Alarm 22050 ”Maximum speed reached”	
Note for the reader:	802D sl Description of Functions: S1	

V390x 2001.1 Interface signal	Setpoint speed limited (programmed speed too high) Signal(s) from axis/spindle (NCK -> PLC)	
Edge evaluation: yes	Signal(s) updated: cyclic	Signal(s) valid from SW:
Signal state 1 or signal transition 0 ->1	If a spindle speed (rev/min) or a constant cutting speed (m/min or ft/min) is programmed, the value is **exceeded** one of the following limits: · Max. speed of specified gear stage · Maximum spindle speed · Speed limited by the PLC interface signal · Progr. Spindle speed limiting G26 · Progr. Spindle speed limiting for G96 The spindle speed is limited to the maximum limit.	
Signal state 0 or signal transition 1 ->0	If a spindle speed (1/min) or a constant cutting speed (m/min) or ft/min) is programmed, none of the limit values have been exceeded.	
Application example(s)	The IS ”Setpoint speed limited” can be used to detect that the programmed speed cannot be achieved. The PLC user can recognize this condition as not permissible and block path feed, or he can block the path feed or the entire channel. IS ”Spindle in set range” is processed.	
Note for the reader:	802D sl Description of Functions: S1	

V390x 2001.2 Interface signal	Setpoint speed increased (programmed speed too low) Signal(s) from axis/spindle (NCK -> PLC)	
Edge evaluation: yes	Signal(s) updated: cyclic	Signal(s) valid from SW:
Signal state 1 or signal transition 0 ->1	If a spindle speed (rev/min) or a constant cutting speed (m/min or ft/min) is programmed, the value is **below** one of the following limits: · Minimum speed of the specified gear stage · Min. spindle speed · Speed limited by the PLC · Progr. Spindle speed limiting G25 · Progr. spindle speed limit for G96 The spindle speed is limited to the minimum limit.	
Signal state 0 or signal transition 1 ->0	If a spindle speed (1/min) or a constant cutting speed (m/min or ft/min) is programmed, the value has not fallen below any of the limits.	
Application example(s)	The IS ”Setpoint speed increased” can be used to detect that the programmed speed cannot be achieved. The PLC user can recognize this condition as not permissible and block path feed, or he can block the path feed or the entire channel. IS ”Spindle in set range” is processed.	
Note for the reader:	802D sl Description of Functions: S1	

V390x 2001.5 Interface signal	Spindle in setpoint range Signal(s) from axis/spindle (NCK -> PLC)	
Edge evaluation: yes	Signal(s) updated: cyclic	Signal(s) valid from SW:
Signal state 1 or signal transition 0 ->1	The IS ”Spindle in setpoint range” reports whether the programmed, and possibly limited spindle speed has been reached. In the spindle ”control mode”, the speed setpoint (programmed speed + spindle override including limits) is compared with the actual speed. If the actual speed deviates from the set speed by **less** than the spindle speed tolerance in MD 35150: SPIND_DES_VELO_TOL, the IS ”Spindle in setpoint range” is enabled.	
Signal state 0 or signal transition 1 ->0	The IS ”Spindle in setpoint range” reports whether the spindle is still in the acceleration or braking phase. In the spindle control mode, the speed setpoint (programmed speed * spindle override) is compared with the actual value. If the actual speed deviates from the set speed by **more** than the spindle speed tolerance in SPIND_DES_VELO_TOL, the IS ”Spindle in setpoint range” is reset.	
Signal irrelevant for	all spindle modes except for speed mode (control mode).	
Application example(s)	The path feed must generally be disabled when the spindle is in the acceleration phase (programmed speed setpoint not yet reached). This can be performed as follows: · The IS ”Spindle in setpoint range” is evaluated and the IS ”Feed disable” (V3200 0006.0) is enabled. · MD 35500: SPIND_ON_SPEED_AT_IPO_START (feed enable with spindle in setpoint range) is enabled and the NCK then internally evaluates whether the spindle is in the setpoint range. The path feed is only enabled if the spindle is within the setpoint range. The positioning axes are never stopped by this function.	
Related to	MD 35500: SPIND_DES_VELO_TOL (spindle speed tolerance)	
Note for the reader:	802D sl Description of Functions: S1	

V390x 2001.7 Interface signal	Actual direction of rotation clockwise Signal(s) from axis/spindle (NCK -> PLC)	
Edge evaluation: yes	Signal(s) updated: cyclic	Signal(s) valid from SW:
Signal state 1 or signal transition 0 ->1	When the spindle is rotating, ”Actual direction of rotation clockwise” = 1 signals that the direction of rotation is CLOCKWISE. The actual direction of rotation is derived from the spindle position measurement encoder.	
Signal state 0 or signal transition 1 ->0	When the spindle is rotating, ”Actual direction of rotation clockwise” = 0 signals that the direction of rotation is COUNTERCLOCKWISE.	
Signal irrelevant for	· Spindle stationary, IS ”Axis/spindle stationary” = 1 (at standstill it is not possible to evaluate a direction of rotation) · Spindles without a position measuring encoder	
Related to	IS ”Spindle stationary” (V390x 0001.4)	
Note for the reader:	802D sl Description of Functions: S1	

V390x 2002.0 Interface signal	Constant cutting rate active Signal(s) from axis/spindle (NCK -> PLC)	
Edge evaluation: yes	Signal(s) updated: cyclic	Signal(s) valid from SW:
Signal state 1 or signal transition 0 ->1	For programming G96 S... the constant cutting rate function is carried out. The S word is now the cutting value.	
Related to		
Note for the reader:	802D sl Description of Functions: S1	

V390x 2002.3 Interface signal	Rigid tapping active (no compensation) Signal(s) from axis/spindle (NCK -> PLC)	
Edge evaluation: yes	Signal(s) updated: cyclic	Signal(s) valid from SW:
Signal state 1 or signal transition 0 ->1	The spindle is running in the rigid tapping function [no compensating chuck] (thread interpolation G331/G332). The spindle speed is also programmed with S.... in rev/min for rigid tapping, however the direction of rotation is stored in the sign for the pitch. There is **no** specific interface signals such as: IS ”Spindle reset” IS ”Synchronize spindle” IS ”Invert M3/M4” IS ”Spindle in setpoint range” IS ”Programmable speed too high”	
Application example(s)	Certain functions should not be used during rigid tapping (no compensating chuck), such as: · Reset IS ”Controller enable” (V380x 0002.1) · IS ”Set feed stop” (V380x 0004.3) · Reset · When activating the EMERGENCY STOP during rigid tapping, it should be remembered that the tool and workpiece are locked together.	
Related to		
Note for the reader:	802D sl Description of Functions: S1	

V390x 2002.5 Interface signal	Active spindle positioning mode Signal(s) from axis/spindle (NCK -> PLC)	
Edge evaluation: yes	Signal(s) updated: cyclic	Signal(s) valid from SW:
Signal state 1 or signal transition 0 ->1	When programming SPOS=..... the spindle is in positioning mode.	
Related to	IS ”Active spindle mode control mode” (V390x 2002.7) IS ”Active spindle mode oscillation mode” (V390x 2002.6)	
Note for the reader:	802D sl Description of Functions: S1	

V390x 2002.6 Interface signal	Active spindle mode oscillation mode Signal(s) from axis/spindle (NCK -> PLC)	
Edge evaluation: yes	Signal(s) updated: cyclic	Signal(s) valid from SW:
Signal state 1 or signal transition 0 ->1	The spindle is in oscillation mode if a new gear stage was defined using the automatic gear stage selection (M40) or M41 to M45 (IS ”Change gear” is enabled). The IS ”Change gear” is only enabled when a new gear stage is selected that is **not equal** to the current actual gear stage.	
Related to	IS ”Active spindle mode control mode” (V390x 2002.7) IS ”Active spindle mode positioning mode” (V390x 2002.5) IS ”Change gear” (V390x 2000.3)	
Note for the reader:	802D sl Description of Functions: S1	

V390x 2002.7 Interface signal	Active spindle control mode Signal(s) from axis/spindle (NCK -> PLC)	
Edge evaluation: yes	Signal(s) updated: cyclic	Signal(s) valid from SW:
Signal state 1 or signal transition 0 ->1	The spindle is in control mode with the following functions: Spindle direction of rotation input M3/M4 or spindle stop M5	
Related to	IS ”Active spindle mode oscillation mode” (V390x 2002.6) IS ”Active spindle mode positioning mode” (V390x 2002.5)	
Note for the reader:	802D sl Description of Functions: S1	

V390x5004.2 Interface signal	Reciprocation reversal active Signal(s) from axis/spindle	
Edge evaluation: no	Signal(s) updated: cyclically	Signal(s) valid from SW release:
Signal status 1 or signal transition 0 -> 1	The braking phase after reciprocation reversal from external (DB31, ...DBX28.0) is active.	
Signal status 0 or signal transition 1 -> 0	No braking after reciprocation reversal from external is active.	

V390x5004.3 Interface signal	Reciprocation cannot be started. Signal(s) from axis/spindle	
Edge evaluation: no	Signal(s) updated: cyclically	Signal(s) valid from SW release:
Signal status 1 or signal transition 0 -> 1	The reciprocating axis cannot be started; faulty programming. This state can also occur if the traversing motion has already been performed.	
Signal status 0 or signal transition 1 -> 0	The reciprocating motion can be started.	

V390x5004.4 Interface signal	Error during the reciprocating motion Signal(s)	
Edge evaluation:	Signal(s) updated:	Signal(s) valid from SW release: 2.1
Signal status 1 or signal transition 0 -> 1	The reciprocating motion was canceled.	
Signal status 0 or signal transition 1 -> 0	The reciprocating motion is performed without errors.	

V390x5004.5 Interface signal	Sparking-out active Signal(s) from axis/spindle	
Edge evaluation: no	Signal(s) updated: cyclically	Signal(s) valid from SW release:
Signal status 1 or signal transition 0 -> 1	The axis performs sparking-out strokes.	
Signal status 0 or signal transition 1 -> 0	The axis is currently not performing any sparking-out strokes.	
Related to	DBX100.7	

V390x5004.6 Interface signal	Reciprocating motion active Signal(s) from axis/spindle	
Edge evaluation: no	Signal(s) updated: cyclically	Signal(s) valid from SW release:
Signal status 1 or signal transition 0 -> 1	The axis performs a reciprocating motion between 2 reversal points.	
Signal status 0 or signal transition 1 -> 0	The axis is currently not reciprocating.	
Signal not relevant with	DBX100.7 = 0	
Related to	DBX100.7	

V390x5004.7 Interface signal	Reciprocation active Signal(s) from axis/spindle	
Edge evaluation: no	Signal(s) updated: cyclically	Signal(s) valid from SW release:
Signal status 1 or signal transition 0 -> 1	The axis is currently traversed as a reciprocating axis.	
Signal status 0 or signal transition 1 -> 0	The axis is a positioning axis.	
Related to	DBX100.5, DBX100.6	

V390x5008.0 to .5 Interface signal	Active infeed axes Signal(s) from axis/spindle	
Edge evaluation: no	Signal(s) updated: cyclically	Signal(s) valid from SW release:
Signal status 1 or signal transition 0 -> 1	The axis that issues the signal is currently the reciprocating axis and reports its active infeed axes (104.0 axis 1 is infeed axis, 104.1 axis 2 is infeed axis, etc.) in this field.	
Signal status 0 or signal transition 1 -> 0	The appropriate axis is not an infeed axis.	
Related to	DBX100.7	

5.8 Tool management functions from NC channel

V5300 0000.0 Interface signal	Tool prewarning limit reached Signal(s) from channel (NCK -> PLC)	
Edge evaluation: yes	Signal(s) updated: Job controlled by NCK	Signal(s) valid from SW:
Signal state 1/ value	The prewarning limit for a tool to be monitored was reached. The T number is provided in VD5300 1000.	
Signal state 0	No prewarning limit reached	
Note for the reader:	802D sl Description of Functions: W1	

V5300 0000.1 Interface signal	Tool limit value reached Signal(s) from channel (NCK ---> PLC)	
Edge evaluation: yes	Signal(s) updated: Job controlled by NCK	Signal(s) valid from SW:
Signal state 1/ value	The limit for a tool to be monitored was reached. The T number is provided in VD5300 1004.	
Signal state 0	Limit value reached	
Note for the reader:	802D sl Description of Functions: W1	

VD5300 1000 Interface signal	T number for tool prewarning limit Signal(s) from channel (NCK ---> PLC)	
Edge evaluation: yes	Signal(s) updated: Job controlled by NCK	Signal(s) valid from SW:
Signal state 1/ value	The T number for which the tool prewarning limit is set is provided.	
Signal state 0	No tool number reported	
Note for the reader:	802D sl Description of Functions: W1	

VD5300 1004 Interface signal	T number for tool limit value Signal(s) from channel (NCK ---> PLC)		
Edge evaluation: yes		Signal(s) updated: Job controlled by NCK	Signal(s) valid from SW:
Signal state 1/ value	The T number for which the tool limit value is set is provided.		
Signal state 0	No tool number reported		
Note for the reader:	802D sl Description of Functions: W1		

SINAMICS parameters

6

6.1 List of parameters

For a list of the SINAMICS parameters, see:

- /LH1/ SINAMICS S120/S150 List Manual

Appendix A

A

A.1 Abbreviations 802D sl

Abbreviation	German	English
AC	Alternating Current	Alternating Current
ADI	Analog Drive Interface	Analog Drive Interface
ALM	Active Line Module	Active Line Module
AT	AT command set	AT command set
BERO	Tradename for a type of proximity switch	Tradename for a type of proximity switch
BICO	Binector Connector Technology	Binector Connector Technology
CBC	Communication Board CAN	Communication Board CAN
CBE	Communication Board Ethernet	Communication Board Ethernet
CPU	Central Processing Unit	Central Processing Unit
CNC	Computerized Numerical Control	Computerized Numerical Control
CSM	Control Supply Module	Control Supply Module
CU	Control Unit	Control Unit
DC	Direct Current	Direct Current
DMC	DRIVE-CLiQ Hub Module Cabinet	DRIVE-CLiQ Hub Module Cabinet
DO	Drive Object	Drive Object
DP	Distributed I/O	Distributed I/O
DRIVE-CLiQ	Drive Component Link with IQ	Drive Component Link with IQ
EDS	Encoder Data Set	Encoder Data Set
EMC	Electromagnetic Compatibility	Electromagnetic Compatibility (EMC)
EN	European Standard	European Standard
EP	Pulse enable	Pulse enable
ELCB	Earth Leakage Circuit Breaker	Earth Leakage Circuit Breaker (ELCB)
HMI	Human Machine Interface	Human Machine Interface
HTL	Logic with high interference threshold	High-Threshold Logic
IEC	International Electrotechnical Commission	International Electrotechnical Commission
IT	Insulated three-phase supply network	Insulated three-phase supply network
LED	Light Emitting Diode	Light Emitting Diode
LM	Line Module	Line Module
MCP	Machine Control Panel	Machine Control Panel
MCPA	Machine Control Panel Analog	Machine Control Panel Analog
NC	Numerical Control	Numerical Control
NCK	Numerical Control Kernel, with block preparation, traversing range, etc.	Numerical Control Kernel
NCU	Numerical Control Unit	Numerical Control Unit
NX	Numerical Extension	Numerical Extension
OP	Operator panel front	Operator Panel

Abbreviation	German	English
PCU	CNC integrated into the operator panel for user interface, system software and soft PLC	Panel Control Unit
PE	Protective earth	Protective Earth
PELV	Safety Extra-Low Voltage	Safety Extra-Low Voltage
PLC	Programmable Logical Controller	Programmable Logic Controller
PP	I/O module for PROFIBUS DP	I/O module for PROFIBUS DP
RCS	Remote Control System	Remote Control System
SBC	Safe Brake Control	Safe Brake Control
SDB	System Data Block	System Data Block
SH	Safe standstill	Safe standstill
SIL	Safety Integrity Level	Safety Integrity Level
LEC	Leadscrew Error Compensation	Leadscrew Error Compensation
SSI	Synchronous Serial Interface	Synchronous Serial Interface
sl	solution line	solution line
SLM	Smart Line Module	Smart Line Module
SMC	Sensor Module Cabinet	Sensor Module Cabinet
SME	Sensor Module External	Sensor Module External
SMI	Sensor Module Integrated	Sensor Module Integrated
SPL	Safe Programmable Logic	Safe Programmable Logic
STW	Control word	Control word
GWPS	Grinding Wheel Peripheral Speed	
TCU	Thin Client Unit	Thin Client Unit
TM	Terminal Module	Terminal Module
TN	Grounded three-phase supply network	Grounded three-phase supply network
TT	Grounded three-phase supply network	Grounded three-phase supply network
TTL	Transistor-Transistor Logic	Transistor-Transistor Logic
TP	Twisted Pair	Twisted Pair
VPM	Voltage Protection Module	Voltage Protection Module
VS	Voltage Supply	Voltage Supply
VSM	Voltage Sensing Module	Voltage Sensing Module
ZSW	Status word	Status word

A.2 Document tree 802D sl

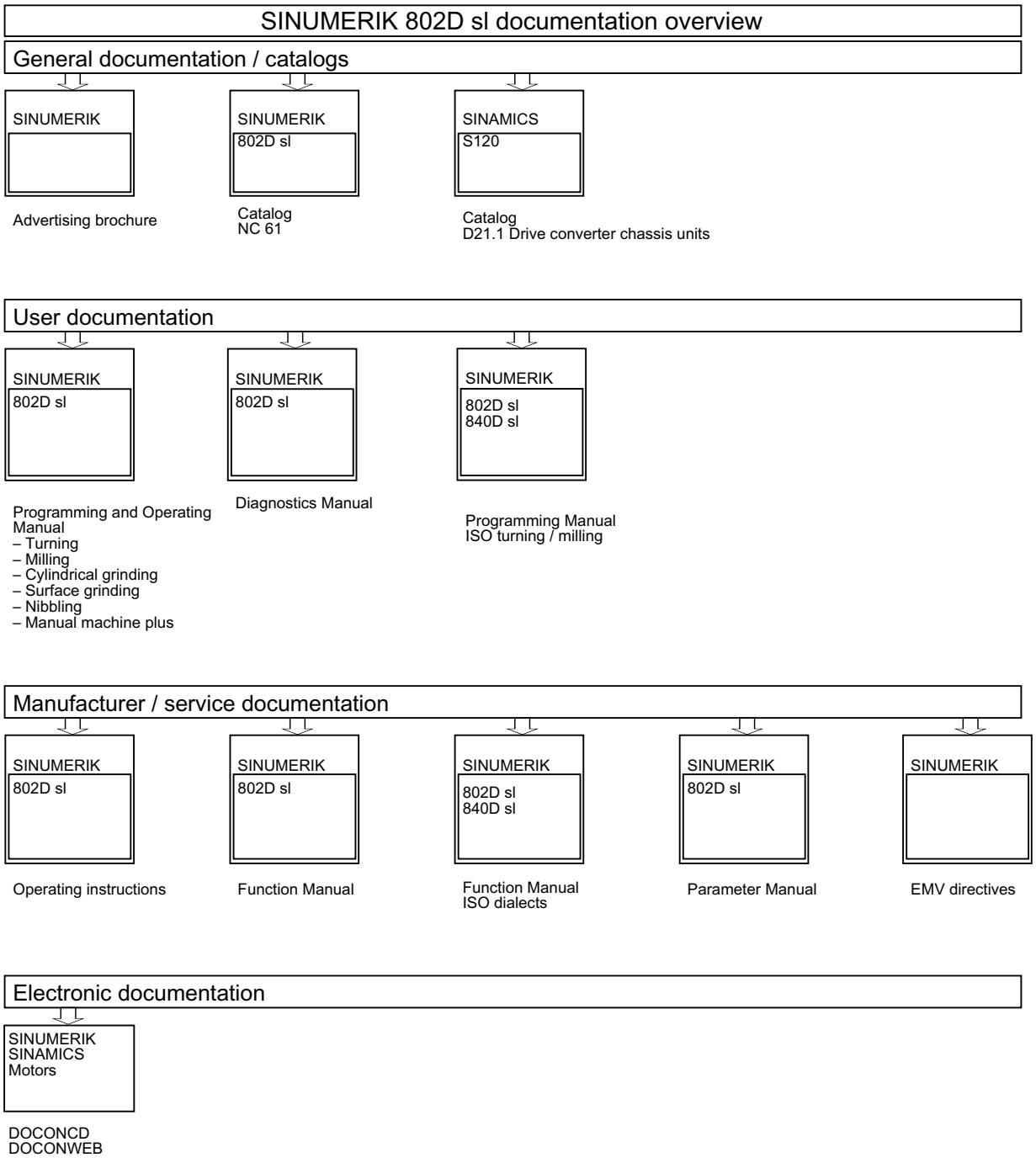

Index

Numerics

1000, 513
1100, 513
1200, 514
1200 ... 1207, 514
1400, 515
1600, 515, 516
1700, 517
1800, 518
1900, 518
2500, 520
2600, 522
2700, 523
2800, 524
2900, 525
3000, 525
3100, 526
3200, 526
3300, 529
3500, 531
3700 ... 3704, 532
3800 ... 3804, 532
3800 ... 3805, 534
3900 ... 3905, 536
4500, 540
4900, 541
5300, 542
5700 ... 5704, 542

A

AA_OFF_MODE
    MD 36750, 442
ABS_INC_RATIO
    MD 30260, 353
ABSBLOCK_ENABLE
    MD 42750, 491
ABSBLOCK_FUNCTION_MASK
    MD 27100, 329
AC_FILTER_TIME
    MD 32920, 398
ACCEL_REDUCTION_FACTOR
    MD 35230, 424
ACCEL_REDUCTION_SPEED_POINT
    MD 35220, 424
ACCESS_EXEC_CMA
    MD 11161, 105
ACCESS_EXEC_CST
    MD 11160, 104
ACCESS_EXEC_CUS
    MD 11162, 105
ACCESS_WRITE_CMA
    MD 11166, 106
ACCESS_WRITE_CST
    MD 11165, 105
ACCESS_WRITE_CUS
    MD 11167, 106
ACCESS_WRITE_MACCESS
    MD 11171, 107
ACCESS_WRITE_SACCESS
    MD 11170, 107
ACCESS_WRITE_UACCESS
    MD 11172, 107
ACT_POS_ABS
    MD 30250, 352
Active alarm reaction, 516
ADAPT_PATH_DYNAMIC
    MD 20465, 234
ADD_MOVE_ACCEL_RESERVE
    MD 20610, 239
ADISPOSA_VALUE
    MD 43610, 504
Adressranges, 511
ALARM_CLR_NCSTART_W_CANCEL
    MD 11414, 123
ALARM_PAR_DISPLAY_TEXT
    MD 11413, 122
ALARM_REACTION_CHAN_NOREADY
    MD 11412, 122
ALLOW_G0_IN_G96
    MD 20750, 245
APPROACH_FEED
    MD 42120, 475
ASSIGN_CHAN_TO_MODE_GROUP
    MD 10010, 34
ASSIGN_FEED_PER_REV_SOURCE
    MD 43300, 501
ASSIGN_SPIN_TO_WP_SPIN1
    MD 1088, 29
ASSIGN_SPIN_TO_WP_SPIN2
    MD 1089, 29
ASUP_EDIT_PROTECTION_LEVEL
    MD 11612, 129
ASUP_EDITABLE
    MD 11610, 129

ASUP_START_MASK
MD 11602, 128
ASUP_START_PRIO_LEVEL
MD 11604, 129
AUTO_GET_TYPE
MD 30552, 360
AUTO_IPTR_LOCK
MD 22680, 270
AUXFU_ASSIGN_EXTENSION
MD 22020, 257
AUXFU_ASSIGN_GROUP
MD 22000, 256
AUXFU_ASSIGN_SPEC
MD 22035, 257
AUXFU_ASSIGN_TYPE
MD 22010, 256
AUXFU_ASSIGN_VALUE
MD 22030, 257
AUXFU_ASSOC_M0_VALUE
MD 22254, 262
AUXFU_ASSOC_M1_VALUE
MD 22256, 262
AUXFU_D_SYNC_TYPE
MD 22250, 261
AUXFU_DL_SYNC_TYPE
MD 22252, 261
AUXFU_GROUP_SPEC
MD 11110, 103
AUXFU_H_TYPE_INT
MD 22110, 260
AUXFU_M_SYNC_TYPE
MD 22200, 260
AUXFU_MAXNUM_GROUP_ASSIGN
MD 11100, 102
AUXFU_PREDEF_EXTENSION
MD 22060, 258
AUXFU_PREDEF_GROUP
MD 22040, 258
AUXFU_PREDEF_SPEC
MD 22080, 259
AUXFU_PREDEF_TYPE
MD 22050, 258
AUXFU_PREDEF_VALUE
MD 22070, 258
AUXFU_QUICK_BLOCKCHANGE
MD 22100, 259
AUXFU_S_SYNC_TYPE
MD 22210, 260
AUXFU_T_SYNC_TYPE
MD 22220, 261
Auxiliary function transfer from NC channel, 550
Auxiliary function transfer from NC channel, 520
AX_EMERGENCY_STOP_TIME
MD 36610, 438
AX_ESR_DELAY_TIME1
MD 37510, 460
AX_ESR_DELAY_TIME2
MD 37511, 460
AX_JERK_DAMP
MD 32414, 379
AX_JERK_ENABLE
MD 32400, 378
AX_JERK_FREQ
MD 32412, 379
AX_JERK_MODE
MD 32402, 378
AX_JERK_TIME
MD 32410, 379
AX_LOAD_DISPL
MD 1107, 32
AX_MOTION_DIR
MD 32100, 373
AX_VELO_LIMIT
MD 36200, 434
AXCHANGE_MASK
MD 10722, 87
AXCONF_ASSIGN_MASTER_CHAN
MD 30550, 360
AXCONF_CHANAX_DEFAULT_NAME
MD 20082, 199
AXCONF_CHANAX_NAME_TAB
MD 20080, 198
AXCONF_GEOAX_ASSIGN_TAB
MD 20050, 196
AXCONF_GEOAX_NAME_TAB
MD 20060, 197
AXCONF_MACHAX_NAME_TAB
MD 10000, 33
AXCONF_MACHAX_USED
MD 20070, 198
AXES_SCALE_ENABLE
MD 22914, 272
AXIS_DIAGNOSIS
MD 36690, 440
AXIS_LANG_SUB_MASK
MD 30465, 357
AXIS_VAR_SERVER_SENSITIVE
MD 11398, 119
Axis/spindle signals, 532
Axis-/spindle-specific signals, 585

B

BACKLASH

MD 32450, 382
BACKLASH_FACTOR
MD 32452, 382
BAG_MASK
MD 11600, 127
BERO_DELAY_TIME_MINUS
MD 31123, 365
BERO_DELAY_TIME_PLUS
MD 31122, 364
BRAKE_MODE_CHOICE
MD 36600, 438

C

CC_HW_DEBUG_MASK
MD 10430, 59
CC_TDA_PARAM_UNIT
MD 10290, 52
CC_TOA_PARAM_UNIT
MD 10292, 53
CCS_TDA_PARAM_UNIT
MD 10291, 52
CCS_TOA_PARAM_UNIT
MD 10293, 53
CEC_ENABLE
MD 32710, 392
CEC_MAX_SUM
MD 32720, 393
CEC_MAX_VELO
MD 32730, 394
CEC_SCALING_SYSTEM_METRIC
MD 32711, 393
CEC_TABLE_ENABLE
MD 41300, 469
CEC_TABLE_WEIGHT
MD 41310, 470
CENTRAL_LUBRICATION
MD 12300, 139
CHAMFER_NAME
MD 10656, 74
CHAN_NAME
MD 20000, 196
Channel Signals, 526
Channel-specific signals, 560
CHBFRAME_POWERON_MASK
MD 24004, 274
CHBFRAME_RESET_MASK
MD 24002, 274
Checkback signal Program selection from HMI (retentive area), 517
CHFRND_MAXNUM_DUMMY_BLOCKS
MD 20200, 219
CHFRND_MODE_MASK
MD 20201, 220
CHSFRAME_POWERON_MASK
MD 24008, 276
CHSFRAME_RESET_CLEAR_MASK
MD 24007, 275
CHSFRAME_RESET_MASK
MD 24006, 274
CIRCLE_ERROR_CONST
MD 21000, 247
CIRCLE_ERROR_FACTOR
MD 21010, 247
CLAMP_POS_TOL
MD 36050, 431
CMM_POS_COORDINATE_SYSTEM
MD 330, 23
COL_OVERSIZE_TYPE_CHECKBOX
MD 395, 29
COM_CONFIGURATION
MD 10161, 42
COM_IPO_STRATEGY
MD 10073, 37
COMP_ADD_VELO_FACTOR
MD 32760, 395
COMPAR_ASSIGN_ANA_INPUT_1
MD 10530, 67
COMPAR_ASSIGN_ANA_INPUT_2
MD 10531, 67
COMPAR_THRESHOLD_1
MD 41600, 472
COMPAR_THRESHOLD_2
MD 41601, 473
COMPAR_TYPE_1
MD 10540, 68
COMPAR_TYPE_2
MD 10541, 69
COMPRESS_ORI_ROT_TOL
MD 42477, 482
COMPRESS_SMOOTH_FACTOR
MD 20485, 234
COMPRESS_SPLINE_DEGREE
MD 20486, 235
CONE_ANGLE
MD 42995, 497
CONST_VELO_MIN_TIME
MD 20500, 235
CONTOUR_DEF_ANGLE_NAME
MD 10652, 73
CONTOUR_MASK
MD 331, 23
CONTOUR_SAMPLING_FACTOR
MD 10682, 75

CONTOUR_TOL
MD 36400, 437
CONTOURHANDWH_IMP_PER_LATCH
MD 11322, 114
CONTPREC
MD 42450, 481
CONTROL_UNIT_LOGIC_ADDRESS
MD 13120, 144
CONVERT_SCALING_SYSTEM
MD 10260, 50
COREFILE_NAME
MD 18930, 195
CORNER_SLOWDOWN_CRIT
MD 42526, 488
CORNER_SLOWDOWN_END
MD 42522, 487
CORNER_SLOWDOWN_OVR
MD 42524, 487
CORNER_SLOWDOWN_START
MD 42520, 487
CORR_VELO
MD 32070, 368
COUP_SYNC_DELAY_TIME
MD 37240, 454
COUPLE_CYCLE_MASK
MD 11754, 132
CPREC_WITH_FFW
MD 20470, 234
CRIT_SPLINE_ANGLE
MD 42470, 482
CTAB_DEFAULT_MEMORY_TYPE
MD 20905, 247
CTAB_ENABLE_NO_LEADMOTION
MD 20900, 246
CTM_CROSS_AX_DIAMETER_ON
MD 291, 22
CTM_G91_DIAMETER_ON
MD 292, 22
CTM_POS_COORDINATE_SYSTEM
MD 290, 21
CTM_SIMULATION_TIME_NEW_POS
MD 289, 20
CTRLOUT_LIMIT
MD 36210, 434
CTRLOUT_LIMIT_TIME
MD 36220, 435
CTRLOUT_MODULE_NR
MD 30110, 348
CTRLOUT_NR
MD 30120, 349
CTRLOUT_SEGMENT_NR
MD 30100, 348
CTRLOUT_TYPE
MD 30130, 349
CURV_EFFECT_ON_PATH_ACCEL
MD 20602, 237
CURV_EFFECT_ON_PATH_JERK
MD 20603, 238
CUTCOM_ACT_DEACT_CTRL
MD 42494, 483
CUTCOM_CLSD_CONT
MD 42496, 484
CUTCOM_CORNER_LIMIT
MD 20210, 221
CUTCOM_CURVE_INSERT_LIMIT
MD 20230, 223
CUTCOM_DECEL_LIMIT
MD 42528, 488
CUTCOM_G40_STOPRE
MD 42490, 483
CUTCOM_MAX_DISC
MD 20220, 222
CUTCOM_MAXNUM_CHECK_BLOCKS
MD 20240, 223
CUTCOM_MAXNUM_DUMMY_BLOCKS
MD 20250, 224
CUTCOM_MAXNUM_SUPPR_BLOCKS
MD 20252, 224
CUTDIRMOD
MD 42984, 496
CUTEDGE_PARAM_CHECK_ON
MD 398, 29
CUTMOD_INIT
MD 20127, 209
CUTTING_EDGE_DEFAULT
MD 20270, 225
CUTTING_EDGE_RESET_VALUE
MD 20130, 209
CYC_TOOLNO_EDTMOD_MANUAL_MA
MD 1102, 31
Cyclic signal exchange, 543

D

D_NO_FCT_CYCLE_NAME
MD 11717, 131
Decoded M signals
(M0-M99), 520
DEFAULT_FEED
MD 42110, 475
DEFAULT_ROT_FACTOR_R
MD 42150, 477
DEFAULT_SCALE_FACTOR_AXIS
MD 43120, 498

DEFAULT_SCALE_FACTOR_P
MD 42140, 477
DEFAULT_VALUES_MEM_MASK
MD 11270, 110
DEPTH_OF_LOGFILE_OPT
MD 17600, 153
DEPTH_OF_LOGFILE_OPT_PF
MD 17610, 154
DES_VELO_LIMIT
MD 36520, 438
DIAMETER_AX_DEF
MD 20100, 202
DISABLE_PLC_START
MD 22622, 270
DISPLAY_FUNCTION_MASK
MD 10284, 51
DISPLAY_IS_MODULO
MD 30320, 355
DISPLAY_MODE_INDEXING_AXIS
MD 391, 28
DISPLAY_MODE_POSITION
MD 10136, 42
DISPLAY_RESOLUTION
MD 203, 17
DISPLAY_RESOLUTION_INCH
MD 204, 18
DISPLAY_RESOLUTION_SPINDLE
MD 205, 18
DISPLAY_TOLI_H_NO
MD 393, 28
DISPLAY_TOLI_SISTER_TOOL
MD 394, 29
DPIO_LOGIC_ADDRESS_IN
MD 10500, 65
DPIO_LOGIC_ADDRESS_OUT
MD 10510, 66
DPIO_RANGE_ATTRIBUTE_IN
MD 10502, 65
DPIO_RANGE_ATTRIBUTE_OUT
MD 10512, 66
DPIO_RANGE_LENGTH_IN
MD 10501, 65
DPIO_RANGE_LENGTH_OUT
MD 10511, 66
DRAM_FILESYST_CONFIG
MD 11292, 112
DRAM_FILESYST_SAVE_MASK
MD 11291, 112
DRAM_FILESYSTEM_MASK
MD 11290, 111
DRESSER_FUNCTION_MASK
MD 385, 27
DRIFT_ENABLE
MD 36700, 440
DRIFT_LIMIT
MD 36710, 441
DRIFT_VALUE
MD 36720, 441
DRILL_VELO_LIMIT
MD 35550, 428
DRIVE_AX_RATIO_DENOM
MD 31050, 362
DRIVE_AX_RATIO_NUMERA
MD 31060, 362
DRIVE_AX_RATIO2_DENOM
MD 31064, 363
DRIVE_AX_RATIO2_NUMERA
MD 31066, 363
DRIVE_ENC_RATIO_DENOM
MD 31070, 363
DRIVE_ENC_RATIO_NUMERA
MD 31080, 363
DRIVE_FUNCTION_MASK
MD 13070, 142
DRIVE_LOGIC_ADDRESS
MD 13050, 141
DRIVE_SIGNAL_TRACKING
MD 36730, 442
DRIVE_TELEGRAM_TYPE
MD 13060, 142
DRIVE_TYPE_DP
MD 13080, 143
DRY_RUN_FEED
MD 42100, 474
DRY_RUN_FEED_MODE
MD 42101, 475
DRYRUN_MASK
MD 10704, 78
DYN_LIMIT_RESET_MASK
MD 32320, 377
DYN_MATCH_ENABLE
MD 32900, 398
DYN_MATCH_TIME
MD 32910, 398

E

ENABLE_ALARM_MASK
MD 11411, 122
ENABLE_CHAN_AX_GAP
MD 11640, 130
ENABLE_START_MODE_MASK_PRT
MD 22621, 270
ENC_ABS_BUFFERING

MD 30270, 353
ENC_ABS_TURNS_MODULO
MD 34220, 409
ENC_ABS_ZEROMON_INITIAL
MD 36314, 436
ENC_ABS_ZEROMON_WARNING
MD 36312, 436
ENC_ACTVAL_SMOOTH_TIME
MD 34990, 412
ENC_CHANGE_TOL
MD 36500, 437
ENC_COMP_ENABLE
MD 32700, 392
ENC_DIFF_TOL
MD 36510, 437
ENC_FEEDBACK_POL
MD 32110, 373
ENC_FREQ_LIMIT
MD 36300, 435
ENC_FREQ_LIMIT_LOW
MD 36302, 435
ENC_GRID_POINT_DIST
MD 31010, 361
ENC_INPUT_NR
MD 30230, 351
ENC_INVERS
MD 34320, 411
ENC_IS_DIRECT
MD 31040, 362
ENC_IS_DIRECT2
MD 31044, 362
ENC_IS_INDEPENDENT
MD 30242, 351
ENC_IS_LINEAR
MD 31000, 361
ENC_MARKER_INC
MD 34310, 411
ENC_MEAS_TYPE
MD 30244, 352
ENC_MODULE_NR
MD 30220, 350
ENC_PULSE_MULT
MD 31025, 361
ENC_REFP_MARKER_DIST
MD 34300, 410
ENC_REFP_MODE
MD 34200, 408
ENC_REFP_STATE
MD 34210, 408
ENC_RESOL
MD 31020, 361
ENC_SEGMENT_NR
MD 30210, 350
ENC_SERIAL_NUMBER
MD 34230, 410
ENC_TYPE
MD 30240, 351
ENC_ZERO_MONITORING
MD 36310, 436
EPS_TLIFT_TANG_STEP
MD 37400, 459
EQUIV_CURRCTRL_TIME
MD 32800, 396
EQUIV_SPEEDCTRL_TIME
MD 32810, 397
ESR_DELAY_TIME1
MD 21380, 252
ESR_DELAY_TIME2
MD 21381, 253
ESR_REACTION
MD 37500, 460
EVERY_ENC_SERIAL_NUMBER
MD 34232, 410
EXACT_POS_MODE
MD 20550, 236
EXACT_POS_MODE_G0_TO_G1
MD 20552, 236
EXTERN_CHAN_SYNC_M_NO_MAX
MD 10802, 90
EXTERN_CHAN_SYNC_M_NO_MIN
MD 10800, 90
EXTERN_DIGITS_TOOL_NO
MD 10888, 97
EXTERN_DOUBLE_TURRET_DIST
MD 42162, 478
EXTERN_DOUBLE_TURRET_ON
MD 10812, 92
EXTERN_FIXED_FEEDRATE_F1_F9
MD 42160, 478
EXTERN_FIXED_FEEDRATE_F1_ON
MD 22920, 272
EXTERN_FLOATINGPOINT_PROG
MD 10884, 96
EXTERN_FUNCTION_MASK
MD 20734, 243
EXTERN_G_NO_MAC_CYCLE
MD 10816, 94
EXTERN_G_NO_MAC_CYCLE_NAME
MD 10817, 95
EXTERN_G0_LINEAR_MODE
MD 20732, 243
EXTERN_GCODE_GROUPS_TO_PLC
MD 22512, 264
EXTERN_GCODE_RESET_MODE

MD 20156, 215
EXTERN_GCODE_RESET_VALUES
MD 20154, 214
EXTERN_INCREMENT_SYSTEM
MD 10886, 97
EXTERN_INTERRUPT_BITS_M96
MD 10808, 91
EXTERN_INTERRUPT_NUM_ASUP
MD 10818, 95
EXTERN_INTERRUPT_NUM_RETRAC
MD 10820, 95
EXTERN_M_NO_DISABLE_INT
MD 10806, 91
EXTERN_M_NO_MAC_CYCLE
MD 10814, 93
EXTERN_M_NO_MAC_CYCLE_NAME
MD 10815, 94
EXTERN_M_NO_SET_INT
MD 10804, 90
EXTERN_MEAS_G31_P_SIGNAL
MD 10810, 92
EXTERN_PARALLEL_GEOAX
MD 22930, 273
EXTERN_REF_POSITION_G30_1
MD 43340, 501
EXTERN_RIGID_TAPPING_M_NR
MD 20095, 201
EXTERN_TOOLPROG_MODE
MD 10890, 97

F

F_VALUES_ACTIVE_AFTER_RESET
MD 22410, 263
Read/write NC data
Result, 514
Reading/writing NC data
Job, 514
FASTIO_ANA_NUM_INPUTS
MD 10300, 53
FASTIO_ANA_NUM_OUTPUTS
MD 10310, 54
FASTIO_DIG_NUM_INPUTS
MD 10350, 54
FASTIO_DIG_NUM_OUTPUTS
MD 10360, 55
FASTIO_DIG_SHORT_CIRCUIT
MD 10361, 55
FFW_ACTIVATION_MODE
MD 32630, 390
FFW_MODE
MD 32620, 390
FG_GROUP1
MD 310, 23
FG_GROUP2
MD 311, 23
FG_GROUP3
MD 312, 23
FG_GROUP4
MD 313, 23
FG_GROUP5
MD 314, 23
FGROUP_DEFAULT_AXES
MD 22420, 263
FIPO_TYPE
MD 33000, 399
FIRST_LANGUAGE
MD 202, 17
FIX_POINT_POS
MD 30600, 360
FIXED_STOP_ACKN_MASK
MD 37060, 447
FIXED_STOP_ALARM_MASK
MD 37050, 446
FIXED_STOP_ALARM_REACTION
MD 37052, 447
FIXED_STOP_ANA_TORQUE
MD 37070, 448
FIXED_STOP_BY_SENSOR
MD 37040, 446
FIXED_STOP_CONTROL
MD 37002, 443
FIXED_STOP_MODE
MD 37000, 443
FIXED_STOP_SWITCH
MD 43500, 503
FIXED_STOP_THRESHOLD
MD 37030, 445
FIXED_STOP_TORQUE
MD 43510, 503
FIXED_STOP_TORQUE_DEF
MD 37010, 444
FIXED_STOP_TORQUE_FACTOR
MD 37014, 444
FIXED_STOP_TORQUE_RAMP_TIME
MD 37012, 444
FIXED_STOP_WINDOW
MD 43520, 504
FIXED_STOP_WINDOW_DEF
MD 37020, 445
FLOAT values (MD 14514 USER_DATA_FLOAT), 540
FOC_ACTIVATION_MODE
MD 37080, 448
FOC_STANDSTILL_DELAY_TIME

MD 36042, 431
FPU_CTRLWORD_INIT
MD 18910, 194
FPU_ERROR_MODE
MD 18900, 194
FPU_EXEPTION_MASK
MD 18920, 194
FRAME_ADAPT_MODE
MD 24040, 277
FRAME_ADD_COMPONENTS
MD 24000, 273
FRAME_ANGLE_INPUT_MODE
MD 10600, 69
FRAME_GEOAX_CHANGE_MODE
MD 10602, 70
FRAME_OFFSET_INCR_PROG
MD 42440, 480
FRAME_OR_CORRPOS_NOTALLOWED
MD 32074, 369
FRAME_SAA_MODE
MD 24050, 277
FRAME_SAVE_MASK
MD 10617, 72
FRAME_SUPPRESS_MODE
MD 24020, 277
FRICT_COMP_ACCEL1
MD 32550, 386
FRICT_COMP_ACCEL2
MD 32560, 387
FRICT_COMP_ACCEL3
MD 32570, 388
FRICT_COMP_ADAPT_ENABLE
MD 32510, 383
FRICT_COMP_CONST_MAX
MD 32520, 384
FRICT_COMP_CONST_MIN
MD 32530, 385
FRICT_COMP_ENABLE
MD 32500, 383
FRICT_COMP_INC_FACTOR
MD 32580, 389
FRICT_COMP_MODE
MD 32490, 382
FRICT_COMP_TIME
MD 32540, 385

G

G_GROUP1
MD 305, 22
G_GROUP2
MD 306, 22
G_GROUP3
MD 307, 22
G_GROUP4
MD 308, 22
G_GROUP5
MD 309, 22
G0_LINEAR_MODE
MD 20730, 242
G00_ACCEL_FACTOR
MD 32434, 381
G00_JERK_FACTOR
MD 32435, 381
G53_TOOLCORR
MD 10760, 89
GANTRY_ACT_POS_TOL_ERROR
MD 37135, 452
GANTRY_AXIS_TYPE
MD 37100, 449
GANTRY_BREAK_UP
MD 37140, 453
GANTRY_FUNCTION_MASK
MD 37150, 453
GANTRY_POS_TOL_ERROR
MD 37120, 451
GANTRY_POS_TOL_REF
MD 37130, 452
GANTRY_POS_TOL_WARNING
MD 37110, 449
GCODE_GROUPS_TO_PLC
MD 22510, 263
GCODE_GROUPS_TO_PLC_MODE
MD 22515, 264
GCODE_RESET_MODE
MD 20152, 214
GCODE_RESET_VALUES
MD 20150, 212
GEAR_CHANGE_WAIT_TIME
MD 10192, 44
GEAR_STEP_CHANGE_ENABLE
MD 35010, 413
GEAR_STEP_CHANGE_POSITION
MD 35012, 414
GEAR_STEP_MAX_VELO
MD 35110, 419
GEAR_STEP_MAX_VELO_LIMIT
MD 35130, 421
GEAR_STEP_MAX_VELO2
MD 35112, 419
GEAR_STEP_MIN_VELO
MD 35120, 420
GEAR_STEP_MIN_VELO_LIMIT
MD 35140, 422

GEAR_STEP_MIN_VELO2
MD 35122, 420
GEAR_STEP_PC_MAX_VELO_LIMIT
MD 35135, 421
GEAR_STEP_POSCTRL_ACCEL
MD 35210, 423
GEAR_STEP_POSCTRL_ACCEL2
MD 35212, 423
GEAR_STEP_SPEEDCTRL_ACCEL
MD 35200, 423
GEAR_STEP_USED_IN_AXISMODE
MD 35014, 414
General selection/status signals from HMI, 548
General selection/status signals from HMI (retentive area), 519
General selection/status signals to HMI (retentive area), 519
General signals from NCK, 523
General signals to NC, 553
General signals to NCK, 522
GEOAX_CHANGE_M_CODE
MD 22532, 265
GEOAX_CHANGE_RESET
MD 20118, 207
GMMC_INFO_NO_UNIT
MD 17200, 149
GMMC_INFO_NO_UNIT_STATUS
MD 17201, 149
GRAPHIC_MAX_X
MD 388, 28
GRAPHIC_MAX_Y
MD 390, 28
GRAPHIC_MIN_X
MD 387, 28
GRAPHIC_MIN_Y
MD 389, 28
GUD_AREA_SAVE_TAB
MD 11140, 104

H

HANDWH_CHAN_STOP_COND
MD 20624, 240
HANDWH_GEOAX_MAX_INCR_SIZE
MD 20620, 239
HANDWH_GEOAX_MAX_INCR_VSIZE
MD 20622, 240
HANDWH_IMP_PER_LATCH
MD 11320, 114
HANDWH_MAX_INCR_SIZE
MD 32080, 370
HANDWH_MAX_INCR_VELO_SIZE
MD 32082, 371
HANDWH_REVERSE
MD 11310, 113
HANDWH_STOP_COND
MD 32084, 371
HANDWH_TRUE_DISTANCE
MD 11346, 115
HANDWH_VDI_REPRESENTATION
MD 11324, 114
HANDWH_VELO_OVERLAY_FACTOR
MD 32090, 373
HANDWHEEL_INPUT
MD 11352, 116
HANDWHEEL_LOGIC_ADDRESS
MD 11353, 116
HANDWHEEL_MODULE
MD 11351, 116
HANDWHEEL_SEGMENT
MD 11350, 115
HEX values (MD 14512 USER_DATA_HEX), 540
HIRTH_IS_ACTIVE
MD 30505, 359
HMI_COLE_TITLE_FOCUS_BACK
MD 357, 24
HMI_COLE_TITLE_FOCUS_FOR
MD 356, 24
HW_ASSIGN_ANA_FASTIN
MD 10362, 56
HW_ASSIGN_ANA_FASTOUT
MD 10364, 57
HW_ASSIGN_DIG_FASTIN
MD 10366, 57
HW_ASSIGN_DIG_FASTOUT
MD 10368, 59
HW_SERIAL_NUMBER
MD 18030, 156

I

IGN_PROG_STATE_ASUP
MD 20191, 217
IGNORE_INHIBIT_ASUP
MD 20116, 207
IGNORE_OVL_FACTOR_FOR_ADIS
MD 20490, 235
IGNORE_SINGLEBLOCK_ASUP
MD 20117, 207
IGNORE_SINGLEBLOCK_MASK
MD 10702, 76
INDEX_AX_ASSIGN_POS_TAB
MD 30500, 357
INDEX_AX_DENOMINATOR

MD 30502, 359
INDEX_AX_LENGTH_POS_TAB_1
MD 10900, 99
INDEX_AX_LENGTH_POS_TAB_2
MD 10920, 100
INDEX_AX_MODE
MD 10940, 102
INDEX_AX_NUMERATOR
MD 30501, 358
INDEX_AX_OFFSET
MD 30503, 359
INDEX_AX_POS_TAB_1
MD 10910, 99
INDEX_AX_POS_TAB_2
MD 10930, 101
INFO_FREE_MEM_DPR
MD 18070, 158
INFO_FREE_MEM_DYNAMIC
MD 18050, 156
INFO_FREE_MEM_STATIC
MD 18060, 157
INI_FILE_MODE
MD 11220, 109
INIT_MD
MD 11200, 108
INT values (MD 14510 USER_DATA_INT), 540
INT_INCR_PER_DEG
MD 10210, 45
INT_INCR_PER_MM
MD 10200, 45
Interface signals, 543
Interfaces, 543
INTERMEDIATE_POINT_NAME_TAB
MD 10660, 74
INVERT_SPIN_ICON_MANUAL_MA
MD 1098, 31
INVOLUTE_AUTO_ANGLE_LIMIT
MD 21016, 248
INVOLUTE_RADIUS_DELTA
MD 21015, 248
IPO_CYCLE_TIME
MD 10071, 37
IPO_PARAM_NAME_TAB
MD 10650, 73
IPO_SYSCLOCK_TIME_RATIO
MD 10070, 36
IPOBRAKE_BLOCK_EXCHANGE
MD 43600, 504
IS_CONCURRENT_POS_AX
MD 30450, 357
IS_CONTINOUS_DATA_SAVE_ON
MD 18233, 176
IS_ROT_AX
MD 30300, 354
IS_SD_MAX_PATH_ACCEL
MD 42502, 485
IS_SD_MAX_PATH_JERK
MD 42512, 486
IS_UNIPOLAR_OUTPUT
MD 30134, 349
IS_VIRTUAL_AX
MD 30132, 349

J

JOG_AND_POS_JERK_ENABLE
MD 32420, 379
JOG_AND_POS_MAX_JERK
MD 32430, 380
JOG_CIRCLE_CENTRE
MD 42690, 490
JOG_CIRCLE_END_ANGLE
MD 42694, 491
JOG_CIRCLE_MODE
MD 42692, 490
JOG_CIRCLE_RADIUS
MD 42691, 490
JOG_CIRCLE_START_ANGLE
MD 42693, 491
JOG_CONT_MODE_LEVELTRIGGRD
MD 41050, 465
JOG_FEED_PER_REV_SOURCE
MD 42600, 489
JOG_GEOAX_MODE_MASK
MD 42996, 497
JOG_INC_MODE_LEVELTRIGGRD
MD 11300, 113
JOG_INCR_SIZE_TAB
MD 11330, 115
JOG_INCR_WEIGHT
MD 31090, 364
JOG_MAX_ACCEL
MD 32301, 377
JOG_MAX_JERK
MD 32436, 381
JOG_MODE_KEYS_EDGETRIGGRD
MD 10731, 88
JOG_MODE_MASK
MD 10735, 88
JOG_POSITION
MD 43320, 501
JOG_REV_IS_ACTIVE
MD 41100, 466
JOG_REV_SET_VELO

MD 41120, 467
JOG_REV_VELO
MD 32050, 367
JOG_REV_VELO_RAPID
MD 32040, 367
JOG_ROT_AX_SET_VELO
MD 41130, 468
JOG_SET_VELO
MD 41110, 467
JOG_SPIND_SET_VELO
MD 41200, 468
JOG_VAR_INCR_SIZE
MD 41010, 465
JOG_VELO
MD 32020, 366
JOG_VELO_GEO
MD 21165, 250
JOG_VELO_RAPID
MD 32010, 366
JOG_VELO_RAPID_GEO
MD 21160, 250

L

LANG_SUB_NAME
MD 15700, 149
LANG_SUB_PATH
MD 15702, 149
LCD_CONTRAST
MD 200, 17
LCD_INVERSE
MD 201, 17
LEADSCREW_PITCH
MD 31030, 361
LIFTFAST_DIST
MD 21200, 251
LIFTFAST_STOP_COND
MD 21204, 252
LIFTFAST_WITH_MIRROR
MD 21202, 251
LOOKAH_FFORM
MD 20443, 232
LOOKAH_FREQUENCY
MD 32440, 381
LOOKAH_FUNCTION_MASK
MD 20455, 233
LOOKAH_NUM_OVR_POINTS
MD 20430, 231
LOOKAH_OVR_POINTS
MD 20440, 232
LOOKAH_RELIEVE_BLOCK_CYCLE
MD 20450, 232
LOOKAH_SMOOTH_FACTOR
MD 20460, 233
LOOKAH_SMOOTH_WITH_FEED
MD 20462, 233
LOOKAH_SYSTEM_PARAM
MD 20442, 232
LOOKAH_USE_VELO_NEXT_BLOCK
MD 20400, 231
LUBRICATION_DIST
MD 33050, 400
LUD_EXTENDED_SCOPE
MD 11120, 104

M

M_NO_FCT_CYCLE
MD 10715, 84
M_NO_FCT_CYCLE_NAME
MD 10716, 85
M_NO_FCT_CYCLE_PAR
MD 10718, 86
M_NO_FCT_EOP
MD 10714, 83
M_NO_FCT_STOPRE
MD 10713, 83
M19_SPOS
MD 43240, 500
M19_SPOSMODE
MD 43250, 500
MAINTENANCE_DATA
MD 33060, 400
MAX_ACCEL_OVL_FACTOR
MD 32310, 377
MAX_AX_ACCEL
MD 32300, 376
MAX_AX_JERK
MD 32431, 380
MAX_AX_VELO
MD 32000, 366
MAX_BLOCKS_IN_IPOBUFFER
MD 42990, 497
MAX_LEAD_ANGLE
MD 21090, 248
MAX_NUM_CUTT_EDGE_MANUAL_MA
MD 1097, 31
MAX_NUM_CYCLE_MANUAL_MA
MD 1096, 31
MAX_PATH_JERK
MD 20600, 237
MAX_SPEED_G94_MANUAL_MA
MD 1094, 30
MAX_SPEED_G95_MANUAL_MA

MD 1095, 30
MAX_SPEED_G96_MANUAL_MA
MD 1093, 30
MAX_SPINDEL_SPEED_MANUAL_MA
MD 1092, 30
MAX_TILT_ANGLE
MD 21092, 249
MAXNUM_REPLACEMENT_TOOLS
MD 17500, 150
MAXNUM_USER_DATA_FLOAT
MD 14508, 148
MAXNUM_USER_DATA_HEX
MD 14506, 148
MAXNUM_USER_DATA_INT
MD 14504, 147
MD_FILE_STYLE
MD 11230, 109
MEAS_CENTRAL_SOURCE
MD 13211, 146
MEAS_PROBE_DELAY_TIME
MD 13220, 147
MEAS_PROBE_LOW_ACTIVE
MD 13200, 146
MEAS_PROBE_OFFSET
MD 13231, 147
MEAS_PROBE_SOURCE
MD 13230, 147
MEAS_SAVE_POS_LENGTH2
MD 373, 26
MEAS_SPIN_ACTIV_MANUAL_MA
MD 1100, 31
MEAS_TYPE
MD 13210, 146
MIN_CONTOUR_SAMPLING_TIME
MD 10680, 75
MINFEED
MD 42460, 481
MINTIME_BETWEEN_STROKES
MD 42404, 480
MIRROR_REF_AX
MD 10610, 70
MIRROR_TOGGLE
MD 10612, 71
MIRROR_TOOL_LENGTH
MD 42900, 491
MIRROR_TOOL_WEAR
MD 42910, 492
MM_ABSBLOCK
MD 28400, 344
MM_ABSBLOCK_BUFFER_CONF
MD 28402, 344
MM_ACTFILESYS_LOG_FILE_MEM
MD 18232, 175
MM_ARCLENGTH_SEGMENTS
MD 28540, 346
MM_BUFFERED_AC_MARKER
MD 28257, 342
MM_BUFFERED_AC_PARAM
MD 28255, 342
MM_CEC_MAX_POINTS
MD 18342, 182
MM_CHAN_HASH_TABLE_SIZE
MD 18250, 178
MM_COM_COMPRESS_METHOD
MD 18390, 186
MM_CYC_DATA_MEM_SIZE
MD 18237, 177
MM_DIR_HASH_TABLE_SIZE
MD 18300, 179
MM_DRAM_FILE_MEM_SIZE
MD 18351, 183
MM_E_FILE_MEM_SIZE
MD 18356, 185
MM_ENABLE_TOOL_ORIENT
MD 18114, 166
MM_ENC_COMP_MAX_POINTS
MD 38000, 463
MM_EPSPARAM_DIMENSION
MD 18840, 193
MM_EXTCOM_TASK_STACK_SIZE
MD 18500, 188
MM_EXTERN_CNC_SYSTEM
MD 10880, 95
MM_EXTERN_GCODE_SYSTEM
MD 10881, 96
MM_EXTERN_LANGUAGE
MD 18800, 193
MM_FILE_HASH_TABLE_SIZE
MD 18290, 179
MM_FLASH_FILE_SYSTEM_SIZE
MD 18332, 181
MM_FLASHFILESYS_MEM
MD 18331, 181
MM_GUD_VALUES_MEM
MD 18150, 168
MM_INCOA_MEM_SIZE
MD 18235, 176
MM_INT_TASK_STACK_SIZE
MD 28502, 344
MM_IPO_BUFFER_SIZE
MD 28060, 337
MM_IPO_TASK_STACK_SIZE
MD 18512, 188
MM_KIND_OF_SUMCORR

MD 18112, 165
MM_LOOKAH_FFORM_UNITS
MD 28533, 346
MM_LUD_HASH_TABLE_SIZE
MD 18240, 177
MM_LUD_VALUES_MEM
MD 28040, 336
MM_M_FILE_MEM_SIZE
MD 18353, 184
MM_MAINTENANCE_MON
MD 18860, 193
MM_MAX_AXISPOLY_PER_BLOCK
MD 28520, 345
MM_MAX_CUTTING_EDGE_NO
MD 18105, 164
MM_MAX_CUTTING_EDGE_PERTOOL
MD 18106, 164
MM_MAX_SIZE_OF_LUD_VALUE
MD 18242, 177
MM_MAX_SUMCORR_PER_CUTTEDGE
MD 18110, 165
MM_MAXNUM_ALARM_ACTIONS
MD 18730, 193
MM_NCK_HASH_TABLE_SIZE
MD 18260, 178
MM_NUM_AC_MARKER
MD 28256, 342
MM_NUM_AC_PARAM
MD 28254, 341
MM_NUM_AC_SYSTEM_MARKER
MD 28276, 343
MM_NUM_AC_SYSTEM_PARAM
MD 28274, 343
MM_NUM_AN_TIMER
MD 18710, 192
MM_NUM_BASE_FRAMES
MD 28081, 338
MM_NUM_BLOCKS_IN_PREP
MD 28070, 337
MM_NUM_CC_MON_PARAM
MD 18098, 162
MM_NUM_CC_TDA_PARAM
MD 18094, 160
MM_NUM_CC_TOA_PARAM
MD 18096, 161
MM_NUM_CCS_MON_PARAM
MD 18208, 172
MM_NUM_CCS_TDA_PARAM
MD 18204, 170
MM_NUM_CCS_TOA_PARAM
MD 18206, 171
MM_NUM_CP_MODUL_LEAD
MD 18452, 188
MM_NUM_CP_MODULES
MD 18450, 187
MM_NUM_CURVE_POLYNOMS
MD 18404, 186
MM_NUM_CURVE_POLYNOMS_DRAM
MD 18410, 187
MM_NUM_CURVE_SEG_LIN
MD 18403, 186
MM_NUM_CURVE_SEG_LIN_DRAM
MD 18409, 187
MM_NUM_CURVE_SEGMENTS
MD 18402, 186
MM_NUM_CURVE_SEGMENTS_DRAM
MD 18408, 187
MM_NUM_CURVE_TABS
MD 18400, 186
MM_NUM_CURVE_TABS_DRAM
MD 18406, 187
MM_NUM_CUTTING_EDGES_IN_TOA
MD 18100, 163
MM_NUM_DIR_IN_FILESYSTEM
MD 18310, 180
MM_NUM_FILES_IN_FILESYSTEM
MD 18320, 181
MM_NUM_FILES_PER_DIR
MD 18280, 179
MM_NUM_GUD_MODULES
MD 18118, 167
MM_NUM_GUD_NAMES_CHAN
MD 18130, 168
MM_NUM_GUD_NAMES_NCK
MD 18120, 167
MM_NUM_KIN_TRAFOS
MD 18866, 194
MM_NUM_LUD_NAMES_TOTAL
MD 28020, 336
MM_NUM_MAX_FUNC_NAMES
MD 18170, 169
MM_NUM_MAX_FUNC_PARAM
MD 18180, 170
MM_NUM_MMC_UNITS
MD 10134, 41
MM_NUM_PROTECT_AREA_ACTIVE
MD 28210, 340
MM_NUM_PROTECT_AREA_CHAN
MD 28200, 340
MM_NUM_PROTECT_AREA_CONTOUR
MD 28212, 341
MM_NUM_PROTECT_AREA_NCK
MD 18190, 170
MM_NUM_R_PARAM

MD 28050, 337
MM_NUM_REORG_LUD_MODULES
MD 28010, 335
MM_NUM_SUBDIR_PER_DIR
MD 18270, 179
MM_NUM_SUMCORR
MD 18108, 165
MM_NUM_SYNACT_GUD_AXIS
MD 18663, 190
MM_NUM_SYNACT_GUD_BOOL
MD 18662, 190
MM_NUM_SYNACT_GUD_CHAR
MD 18664, 191
MM_NUM_SYNACT_GUD_INT
MD 18661, 189
MM_NUM_SYNACT_GUD_REAL
MD 18660, 189
MM_NUM_SYNACT_GUD_STRING
MD 18665, 191
MM_NUM_SYSTEM_FILES_IN_FS
MD 18321, 181
MM_NUM_TOOL
MD 18082, 159
MM_NUM_TOOL_CARRIER
MD 18088, 159
MM_NUM_TOOL_ENV
MD 18116, 167
MM_NUM_TOOLHOLDERS
MD 18075, 158
MM_NUM_TRAFO_DATA_SETS
MD 18864, 193
MM_NUM_USER_FRAMES
MD 28080, 338
MM_NUM_USER_MACROS
MD 18160, 169
MM_NUM_VDIVAR_ELEMENTS
MD 28150, 339
MM_NUM_WORKAREA_CS_GROUPS
MD 28600, 347
MM_PATH_VELO_SEGMENTS
MD 28530, 345
MM_PLC_TASK_STACK_SIZE
MD 18540, 188
MM_PLCBG_TASK_STACK_SIZE
MD 18541, 188
MM_PLCINT_TASK_STACK_SIZE
MD 18542, 189
MM_PREP_TASK_STACK_SIZE
MD 28500, 344
MM_REORG_LOG_FILE_MEM
MD 28000, 335
MM_S_FILE_MEM_SIZE
MD 18354, 185
MM_SEARCH_RUN_RESTORE_MODE
MD 28560, 347
MM_SERVO_FIFO_SIZE
MD 18720, 192
MM_SERVO_TASK_STACK_SIZE
MD 18510, 188
MM_SHAPED_TOOLS_ENABLE
MD 28290, 343
MM_SYSTEM_DATAFRAME_MASK
MD 28083, 339
MM_SYSTEM_FRAME_MASK
MD 28082, 338
MM_T_FILE_MEM_SIZE
MD 18355, 185
MM_TOOL_MANAGEMENT_MASK
MD 18080, 159
MM_TYPE_CC_MON_PARAM
MD 18099, 162
MM_TYPE_CC_TDA_PARAM
MD 18095, 160
MM_TYPE_CC_TOA_PARAM
MD 18097, 161
MM_TYPE_CCS_MON_PARAM
MD 18209, 172
MM_TYPE_CCS_TDA_PARAM
MD 18205, 171
MM_TYPE_CCS_TOA_PARAM
MD 18207, 171
MM_TYPE_OF_CUTTING_EDGE
MD 18102, 163
MM_U_FILE_MEM_SIZE
MD 18352, 184
MM_USER_FILE_MEM_MINIMUM
MD 18350, 183
MM_USER_MEM_BUFFERED
MD 18230, 174
MM_USER_MEM_BUFFERED_TYPEOF
MD 18231, 175
MM_USER_MEM_DPR
MD 18220, 174
MM_USER_MEM_DYNAMIC
MD 18210, 173
MMC_INFO_CUT_SPEED
MD 27206, 330
MMC_INFO_CUT_SPEED_STATUS
MD 27207, 330
MMC_INFO_NO_UNIT
MD 27200, 329
MMC_INFO_NO_UNIT_STATUS
MD 27201, 330
MMC_INFO_POSN_LIN

MD 27202, 330
MMC_INFO_POSN_LIN_STATUS
MD 27203, 330
MMC_INFO_REV_FEED
MD 27208, 331
MMC_INFO_REV_FEED_STATUS
MD 27209, 331
MMC_INFO_VELO_LIN
MD 27204, 330
MMC_INFO_VELO_LIN_STATUS
MD 27205, 330
MODESWITCH_MASK
MD 20114, 206
MODULO_RANGE
MD 30330, 356
MODULO_RANGE_START
MD 30340, 356
MONITOR_ADDRESS
MD 11380, 117
MONITOR_DISPLAY_INT
MD 11382, 117
MONITOR_DISPLAY_REAL
MD 11384, 117
MONITOR_INPUT_INT
MD 11386, 118
MONITOR_INPUT_REAL
MD 11388, 118
MONITOR_INPUT_STROBE
MD 11390, 118
MS_ASSIGN_MASTER_SPEED_CMD
MD 37250, 454
MS_ASSIGN_MASTER_TORQUE_CTR
MD 37252, 455
MS_COUPLING_ALWAYS_ACTIVE
MD 37262, 457
MS_FUNCTION_MASK
MD 37253, 455
MS_MAX_CTRL_VELO
MD 37260, 457
MS_MOTION_DIR_REVERSE
MD 37274, 459
MS_SPIND_COUPLING_MODE
MD 37263, 457
MS_TENSION_TORQ_FILTER_TIME
MD 37266, 458
MS_TENSION_TORQUE
MD 37264, 458
MS_TORQUE_CTRL_ACTIVATION
MD 37255, 456
MS_TORQUE_CTRL_I_TIME
MD 37258, 456
MS_TORQUE_CTRL_MODE
MD 37254, 455
MS_TORQUE_CTRL_P_GAIN
MD 37256, 456
MS_TORQUE_WEIGHT_SLAVE
MD 37268, 458
MS_VELO_TOL_COARSE
MD 37270, 458
MS_VELO_TOL_FINE
MD 37272, 459

N

NC signals, 553
NC_LANGUAGE_CONFIGURATION
MD 10711, 82
NC_USER_CODE_CONF_NAME_TAB
MD 10712, 83
NC_USER_EXTERN_GCODES_TAB
MD 10882, 96
NCBFRAME_POWERON_MASK
MD 10615, 72
NCBFRAME_RESET_MASK
MD 10613, 71
NCK signals, 522
NCK_EG_FUNCTION_MASK
MD 11756, 133
NCK_LEAD_FUNCTION_MASK
MD 11750, 131
NCK_PCOS_TIME_RATIO
MD 10185, 44
NCK_TRAIL_FUNCTION_MASK
MD 11752, 132
NIBBLE_PRE_START_TIME
MD 26018, 328
NIBBLE_PUNCH_CODE
MD 26008, 325
NIBBLE_PUNCH_INMASK
MD 26006, 324
NIBBLE_PUNCH_OUTMASK
MD 26004, 323
NIBBLE_SIGNAL_CHECK
MD 26020, 329
NIBPUNCH_PRE_START_TIME
MD 42402, 479
NUM_ENCS
MD 30200, 350
NUM_FIX_POINT_POS
MD 30610, 360
NUM_GEAR_STEPS
MD 35090, 417
NUM_GEAR_STEPS2
MD 35092, 418

O

OEM_AXIS_INFO
MD 37800, 462
OEM_CHAN_INFO
MD 27400, 331
OEM_GLOBAL_INFO
MD 17400, 149
Operating mode signals, 525
OPERATING_MODE_DEFAULT
MD 10720, 87
ORI_JOG_MODE
MD 42660, 489
ORI_TRAFO_ONLINE_CHECK_LIM
MD 21198, 251
ORIENTATION_IS_EULER
MD 21100, 249
OSCILATE_FUNCTION_MASK
MD 1090, 30
OSCILL_CTRL_MASK
MD 43770, 508
OSCILL_DWELL_TIME1
MD 43720, 505
OSCILL_DWELL_TIME2
MD 43730, 506
OSCILL_END_POS
MD 43760, 507
OSCILL_IS_ACTIVE
MD 43780, 509
OSCILL_MODE_MASK
MD 11460, 125
OSCILL_NUM_SPARK_CYCLES
MD 43750, 507
OSCILL_REVERSE_POS1
MD 43700, 505
OSCILL_REVERSE_POS2
MD 43710, 505
OSCILL_START_POS
MD 43790, 509
OSCILL_VELO
MD 43740, 506
OVR_AX_IS_GRAY_CODE
MD 12000, 134
OVR_FACTOR_AX_SPEED
MD 12010, 134
OVR_FACTOR_FEEDRATE
MD 12030, 135
OVR_FACTOR_LIMIT_BIN
MD 12100, 137
OVR_FACTOR_RAPID_TRA
MD 12050, 135
OVR_FACTOR_SPIND_SPEED
MD 12070, 136
OVR_FEED_IS_GRAY_CODE
MD 12020, 134
OVR_FUNCTION_MASK
MD 12090, 137
OVR_RAPID_FACTOR
MD 42122, 476
OVR_RAPID_IS_GRAY_CODE
MD 12040, 135
OVR_REFERENCE_IS_MIN_FEED
MD 12082, 137
OVR_REFERENCE_IS_PROG_FEED
MD 12080, 136
OVR_SPIND_IS_GRAY_CODE
MD 12060, 136

P

PART_COUNTER
MD 27880, 333
PART_COUNTER_MCODE
MD 27882, 334
PATH_IPO_IS_ON_TCP
MD 20260, 224
PATH_MODE_MASK
MD 20464, 234
PATH_TRANS_JERK_LIM
MD 32432, 380
PERMANENT_FEED
MD 12202, 138
PERMANENT_ROT_AX_FEED
MD 12204, 138
PERMANENT_SPINDLE_FEED
MD 12205, 139
PERMISSIVE_FLASH_TAB
MD 11700, 131
PFRAME_RESET_MODE
MD 24010, 276
PLC machine data, 540
PLC User Interface, 511
PLC_ANA_IN_LOGIC_ADDRESS
MD 12978, 140
PLC_ANA_IN_NUM
MD 12979, 140
PLC_ANA_OUT_LOGIC_ADDRESS
MD 12982, 140
PLC_ANA_OUT_NUM
MD 12983, 141
PLC_CYCLE_TIME
MD 10075, 38
PLC_CYCLE_TIME_AVERAGE
MD 10110, 40
PLC_CYCLIC_TIMEOUT

MD 10100, 39
PLC_DEACT_IMAGE_LADDR_IN
MD 12986, 141
PLC_DEACT_IMAGE_LADDR_OUT
MD 12987, 141
PLC_DIG_IN_LOGIC_ADDRESS
MD 12970, 139
PLC_DIG_IN_NUM
MD 12971, 140
PLC_DIG_OUT_LOGIC_ADDRESS
MD 12974, 140
PLC_DIG_OUT_NUM
MD 12975, 140
PLC_IPO_TIME_RATIO
MD 10074, 38
PLC_OB1_TRACE_DEPTH
MD 11480, 126
PLC_OB35_TRACE_DEPTH
MD 11481, 126
PLC_OB40_TRACE_DEPTH
MD 11482, 127
PLC_RUNNINGUP_TIMEOUT
MD 10120, 40
PLCINT_POSCTRL_TIME_RATIO
MD 10172, 43
POS_AX_VELO
MD 32060, 368
POS_LIMIT_MINUS
MD 36100, 432
POS_LIMIT_MINUS2
MD 36120, 433
POS_LIMIT_PLUS
MD 36110, 433
POS_LIMIT_PLUS2
MD 36130, 433
POS_TAB_SCALING_SYSTEM
MD 10270, 50
POSCTRL_CONFIG
MD 32230, 375
POSCTRL_CYCLE_DELAY
MD 10062, 36
POSCTRL_CYCLE_DIAGNOSIS
MD 10063, 36
POSCTRL_CYCLE_TIME
MD 10061, 35
POSCTRL_DAMPING
MD 32950, 399
POSCTRL_GAIN
MD 32200, 374
POSCTRL_INTEGR_ENABLE
MD 32220, 375
POSCTRL_INTEGR_TIME
MD 32210, 375
POSCTRL_OUT_FILTER_ENABLE
MD 32930, 399
POSCTRL_OUT_FILTER_TIME
MD 32940, 399
POSCTRL_SYSCLOCK_TIME_RATIO
MD 10060, 35
POSITIONING_TIME
MD 36020, 430
PREP_COM_TASK_CYCLE_RATIO
MD 10160, 42
PREP_PLCBG_TASK_CYCLE_RATIO
MD 10170, 43
PREPDYN_MAX_FILT_LENGTH_GEO
MD 20607, 238
PREPDYN_MAX_FILT_LENGTH_RD
MD 20608, 238
PREPDYN_SMOOTHING_FACTOR
MD 20605, 238
PREPDYN_SMOOTHING_ON
MD 20606, 238
PREPROCESSING_LEVEL
MD 10700, 75
PROBE_MODE
MD 369, 26
PROCESSTIMER_MODE
MD 27860, 332
PROFIBUS_ACTVAL_LEAD_TIME
MD 37600, 461
PROFIBUS_ALARM_ACCESS
MD 13140, 144
PROFIBUS_ALARM_MARKER
MD 10059, 35
PROFIBUS_CTRL_CONFIG
MD 37610, 461
PROFIBUS_OUTVAL_DELAY_TIME
MD 37602, 461
PROFIBUS_SDB_NUMBER
MD 11240, 110
PROFIBUS_SDB_SELECT
MD 11241, 110
PROFIBUS_SHUTDOWN_TYPE
MD 11250, 110
PROFIBUS_TORQUE_RED_RESOL
MD 37620, 462
PROFIBUS_TRACE_ADDRESS
MD 13110, 143
PROFIBUS_TRACE_FILE_SIZE
MD 13112, 143
PROFIBUS_TRACE_START
MD 13113, 144
PROFIBUS_TRACE_START_EVENT

MD 13114, 144
PROFIBUS_TRACE_TYPE
MD 13111, 143
PROG_EVENT_IGN_INHIBIT
MD 20107, 203
PROG_EVENT_IGN_PROG_STATE
MD 20192, 218
PROG_EVENT_IGN_SINGLEBLOCK
MD 20106, 203
PROG_EVENT_IGN_STOP
MD 20193, 218
PROG_EVENT_MASK
MD 20108, 204
PROG_EVENT_MASK_PROPERTIES
MD 20109, 204
PROG_EVENT_NAME
MD 11620, 130
PROG_FUNCTION_MASK
MD 10280, 51
PROG_SD_POWERON_INIT_TAB
MD 10709, 80
PROG_SD_RESET_SAVE_TAB
MD 10710, 81
PROG_TEST_MASK
MD 10707, 79
Program control signals from HMI (retentive area), 517
Program selection from PLC (retentive area), 517
Program-control signals from HMI, 544
PROTAREA_GEOAX_CHANGE_MODE
MD 10618, 73
PROTOC_IPOCYCLE_CONTROL
MD 11297, 112
PROTOC_PREPTIME_CONTROL
MD 11298, 113
PUNCH_DWELLTIME
MD 42400, 479
PUNCH_PARTITION_TYPE
MD 26016, 327
PUNCH_PATH_SPLITTING
MD 26014, 327
PUNCHNIB_ACTIVATION
MD 26012, 326
PUNCHNIB_ASSIGN_FASTIN
MD 26000, 322
PUNCHNIB_ASSIGN_FASTOUT
MD 26002, 323
PUNCHNIB_AXIS_MASK
MD 26010, 326

R

RADIUS_NAME
MD 10654, 74
RATED_OUTVAL
MD 32250, 375
RATED_VELO
MD 32260, 376
Reading and writing PLC variables, 541
REBOOT_DELAY_TIME
MD 10088, 39
REFP_CAM_DIR_IS_MINUS
MD 34010, 401
REFP_CAM_IS_ACTIVE
MD 34000, 401
REFP_CAM_MARKER_DIST
MD 34093, 405
REFP_CAM_SHIFT
MD 34092, 405
REFP_CYCLE_NR
MD 34110, 407
REFP_MAX_CAM_DIST
MD 34030, 402
REFP_MAX_MARKER_DIST
MD 34060, 403
REFP_MOVE_DIST
MD 34080, 404
REFP_MOVE_DIST_CORR
MD 34090, 404
REFP_NC_START_LOCK
MD 20700, 242
REFP_PERMITTED_IN_FOLLOWUP
MD 34104, 406
REFP_SEARCH_MARKER_REVERSE
MD 34050, 403
REFP_SET_POS
MD 34100, 406
REFP_STOP_AT_ABS_MARKER
MD 34330, 411
REFP_SYNC_ENCS
MD 34102, 406
REFP_VELO_POS
MD 34070, 404
REFP_VELO_SEARCH_CAM
MD 34020, 401
REFP_VELO_SEARCH_MARKER
MD 34040, 402
REORG_LOG_LIMIT
MD 27900, 334
REPOS_MODE_MASK
MD 11470, 125
RESET_MODE_MASK
MD 20110, 204
Retentive data area, 515
ROT_IS_MODULO

MD 30310, 355
RUN_OVERRIDE_0
MD 12200, 138

S

S_VALUES_ACTIVE_AFTER_RESET
MD 22400, 263
SCALING_FACTOR_G70_G71
MD 31200, 365
SCALING_FACTORS_USER_DEF
MD 10230, 47
SCALING_SYSTEM_IS_METRIC
MD 10240, 48
SCALING_USER_DEF_MASK
MD 10220, 45
SCALING_VALUE_INCH
MD 10250, 49
SD_MAX_PATH_ACCEL
MD 42500, 485
SD_MAX_PATH_JERK
MD 42510, 486
SEARCH_RUN_MODE
MD 11450, 124
SERUPRO_MASK
MD 10708, 79
SERUPRO_SPEED_FACTOR
MD 22601, 269
SERUPRO_SPEED_MODE
MD 22600, 268
SERUPRO_SYNC_MASK
MD 42125, 476
SERVO_DISABLE_DELAY_TIME
MD 36620, 439
SETINT_ASSIGN_FASTIN
MD 21210, 252
SHAPED_TOOL_CHECKSUM
MD 20372, 228
SHAPED_TOOL_TYPE_NO
MD 20370, 228
SIEM_TRACEFILES_CONFIG
MD 11294, 112
Signal from fast inputs and outputs, 525
Signals from axis/spindle, 536, 602
Signals from HMI, 518, 546
Signals from MCP (connected to the MCPA module), 513
Signals from NC channel, 529
Signals from operator panel (retentive area), 518
Signals from PLC, 518
Signals from the channel, 575
Signals from/to HMI, 517, 544
Signals to axis/spindle, 532, 587
Signals to channel, 560
Signals to fast inputs and outputs, 524
Signals to MCP, 514
Signals to NC channel, 526
SIMU_AX_VDI_OUTPUT
MD 30350, 356
SINAMICS_ALARM_MASK
MD 13150, 145
SINAMICS_IBN_TIMEOUT_VALUE
MD 1091, 30
SINGLEBLOCK2_STOPRE
MD 42200, 478
SLASH_MASK
MD 10706, 79
SMOOTH_ORI_TOL
MD 42466, 481
SOFT_ACCEL_FACTOR
MD 32433, 380
SOFTKEY_CENTRE_ADJ
MD 1106, 32
SPF_END_TO_VDI
MD 20800, 245
SPIND_ACTIVE_AFTER_RESET
MD 35040, 417
SPIND_ASSIGN_TO_MACHAX
MD 35000, 412
SPIND_CONSTCUT_S
MD 43202, 498
SPIND_DEF_MASTER_SPIND
MD 20090, 199
SPIND_DEFAULT_ACT_MASK
MD 35030, 415
SPIND_DEFAULT_MODE
MD 35020, 414
SPIND_DES_VELO_TOL
MD 35150, 422
SPIND_EXTERN_VELO_LIMIT
MD 35160, 423
SPIND_FUNC_RESET_MODE
MD 35032, 415
SPIND_FUNCTION_MASK
MD 35035, 415
SPIND_MAX_VELO_G26
MD 43220, 499
SPIND_MAX_VELO_LIMS
MD 43230, 500
SPIND_MIN_VELO_G25
MD 43210, 499
SPIND_ON_SPEED_AT_IPO_START
MD 35500, 427
SPIND_OSCILL_ACCEL

MD 35410, 426
SPIND_OSCILL_DES_VELO
MD 35400, 426
SPIND_OSCILL_START_DIR
MD 35430, 426
SPIND_OSCILL_TIME_CCW
MD 35450, 427
SPIND_OSCILL_TIME_CW
MD 35440, 427
SPIND_POSCTRL_VELO
MD 35300, 425
SPIND_POSIT_DELAY_TIME
MD 35310, 425
SPIND_POSITIONING_DIR
MD 35350, 425
SPIND_RIGID_TAPPING_M_NR
MD 20094, 200
SPIND_S
MD 43200, 498
SPIND_SPEED_TYPE
MD 43206, 499
SPIND_STOPPED_AT_IPO_START
MD 35510, 428
SPIND_VELO_LIMIT
MD 35100, 418
SPINDEL_LOAD_BAR_COL1
MD 366, 25
SPINDEL_LOAD_BAR_MAX
MD 365, 25
SPINDEL_LOAD_DISPLE1
MD 360, 24
SPINDLE_DISP_MODE
MD 379, 27
SPINDLE_LOAD_BAR_COL2
MD 367, 25
SPINDLE_LOAD_BAR_COL3
MD 368, 25
SPINDLE_LOAD_BAR_LIM2
MD 363, 25
SPINDLE_LOAD_BAR_LIM3
MD 364, 25
SPINDLE_LOAD_DISPLE2
MD 362, 25
SPLINE_FEED_PRECISION
MD 20262, 225
SPOS_TO_VDI
MD 20850, 246
STANDSTILL_DELAY_TIME
MD 36040, 431
STANDSTILL_POS_TOL
MD 36030, 430
STANDSTILL_VELO_TOL
MD 36060, 432
START_MODE_MASK
MD 20112, 205
START_MODE_MASK_PRT
MD 22620, 269
STARTUP_WITH_MMP
MD 1105, 32
STAT_NAME
MD 10670, 74
STIFFNESS_CONTROL_CONFIG
MD 32642, 391
STIFFNESS_CONTROL_ENABLE
MD 32640, 391
STIFFNESS_DELAY_TIME
MD 32644, 392
STOP_CUTCOM_STOPRE
MD 42480, 482
STOP_LIMIT_COARSE
MD 36000, 429
STOP_LIMIT_FACTOR
MD 36012, 430
STOP_LIMIT_FINE
MD 36010, 429
STOP_MODE_MASK
MD 11550, 127
STOP_ON_CLAMPING
MD 36052, 431
STROKE_CHECK_INSIDE
MD 22900, 271
SUBPRESS_STOPPER_ALARM
MD 399, 29
SUMCORR_DEFAULT
MD 20272, 226
SUMCORR_RESET_VALUE
MD 20132, 209
SUPPRESS_ALARM_MASK
MD 11410, 119
SUPPRESS_ALARM_MASK_2
MD 11415, 123
SUPPRESS_SCREEN_REFRESH
MD 10131, 41
SW_CAM_ASSIGN_FASTOUT_1
MD 10470, 62
SW_CAM_ASSIGN_TAB
MD 10450, 60
SW_CAM_COMP_NCK_JITTER
MD 10490, 65
SW_CAM_MINUS_LEAD_TIME
MD 10460, 61
SW_CAM_MINUS_POS_TAB_1
MD 41500, 470
SW_CAM_MINUS_TIME_TAB_1

MD 41520, 471
SW_CAM_MODE
MD 10485, 64
SW_CAM_PLUS_LEAD_TIME
MD 10461, 61
SW_CAM_PLUS_POS_TAB_1
MD 41501, 471
SW_CAM_PLUS_TIME_TAB_1
MD 41521, 472
SW_CAM_TIMER_FASTOUT_MASK
MD 10480, 63
SYSCLOCK_CYCLE_TIME
MD 10050, 34
SYSCLOCK_SAMPL_TIME_RATIO
MD 10080, 38

T

T_M_ADDRESS_EXT_IS_SPINO
MD 20096, 202
T_NO_FCT_CYCLE_MODE
MD 10719, 86
T_NO_FCT_CYCLE_NAME
MD 10717, 85
TANG_OFFSET
MD 37402, 460
TAPPINGCYCLE_MODE_MANUAL_MA
MD 1103, 32
TARGET_BLOCK_INCR_PROG
MD 42444, 481
TCI_TRACE_ACTIVE
MD 11405, 119
TECHNOLOGY_MODE
MD 27800, 331
TEMP_COMP_ABS_VALUE
MD 43900, 509
TEMP_COMP_REF_POSITION
MD 43920, 510
TEMP_COMP_SLOPE
MD 43910, 510
TEMP_COMP_TYPE
MD 32750, 394
THREAD_RAMP_DISP
MD 42010, 474
THREAD_START_ANGLE
MD 42000, 473
TIME_LIMIT_NETTO_COM_TASK
MD 10130, 40
TIME_LIMIT_NETTO_INT_TASK
MD 27920, 335
TIME_LIMIT_NETTO_PLCBG_TASK
MD 10171, 43
TIME_LIMIT_PLCINT_TASK
MD 10173, 43
TIME_LIMIT_PLCINT_TASK_DIAG
MD 10174, 44
TOCARR_BASE_FRAME_NUMBER
MD 20184, 217
TOCARR_CHANGE_M_CODE
MD 22530, 265
TOCARR_FINE_CORRECTION
MD 42974, 495
TOCARR_FINE_LIM_LIN
MD 20188, 217
TOCARR_FINE_LIM_ROT
MD 20190, 217
TOCARR_ROT_ANGLE_INCR
MD 20180, 216
TOCARR_ROT_ANGLE_OFFSET
MD 20182, 216
TOCARR_ROT_OFFSET_FROM_FR
MD 21186, 251
TOCARR_ROTAX_MODE
MD 20196, 219
TOFRAME_MODE
MD 42980, 495
Tool management functions from NC channel, 542, 613
TOOL_CARRIER_RESET_VALUE
MD 20126, 209
TOOL_CHANGE_ERROR_MODE
MD 22562, 266
TOOL_CHANGE_M_CODE
MD 22560, 266
TOOL_CHANGE_MODE
MD 22550, 265
TOOL_CHG_MANUALMODE_MA
MD 1104, 32
TOOL_CORR_MODE_G43G44
MD 20380, 228
TOOL_CORR_MOVE_MODE
MD 20382, 229
TOOL_CORR_MULTIPLE_AXES
MD 20384, 229
TOOL_DATA_CHANGE_COUNTER
MD 17530, 152
TOOL_DEFAULT_DATA_MASK
MD 17520, 151
TOOL_GRIND_AUTO_TMON
MD 20350, 227
TOOL_LENGTH_CONST
MD 42940, 493
TOOL_LENGTH_TYPE
MD 42950, 494
TOOL_LIST_PLACE_NO

MD 332, 24
TOOL_MANAGEMENT_MASK
MD 20310, 226
TOOL_OFFSET_DRF_ON
MD 20396, 230
TOOL_OFFSET_INCR_PROG
MD 42442, 480
TOOL_PARAMETER_DEF_MASK
MD 20360, 227
TOOL_PRESEL_RESET_VALUE
MD 20121, 208
TOOL_REF_PROBE_AXIS1
MD 370, 26
TOOL_REF_PROBE_AXIS2
MD 371, 26
TOOL_REF_PROBE_AXIS3
MD 372, 26
TOOL_RESET_VALUE
MD 20120, 208
TOOL_RESETMON_MASK
MD 17515, 150
TOOL_TEMP_COMP
MD 42960, 495
TOOL_TEMP_COMP_LIMIT
MD 20392, 230
TOOL_TEMP_COMP_ON
MD 20390, 230
TOOL_TIME_MONITOR_MASK
MD 20320, 227
TOOL_WEAR_LIMIT_VALUE
MD 374, 26
TOOLTYPES_ALLOWED
MD 17540, 153
TRAANG_ANGLE_1
MD 24700, 295
TRAANG_ANGLE_2
MD 24750, 297
TRAANG_BASE_TOOL_1
MD 24710, 295
TRAANG_BASE_TOOL_2
MD 24760, 298
TRAANG_PARALLEL_ACCEL_RES_1
MD 24721, 297
TRAANG_PARALLEL_ACCEL_RES_2
MD 24771, 299
TRAANG_PARALLEL_VELO_RES_1
MD 24720, 296
TRAANG_PARALLEL_VELO_RES_2
MD 24770, 298
TRACE_SELECT
MD 11400, 119
TRACLG_CONTACT_LOWER_LIMIT
MD 21520, 255
TRACLG_CONTACT_UPPER_LIMIT
MD 21518, 255
TRACLG_CTRLSPI_NR
MD 21524, 255
TRACLG_CTRLSPI_VERT_OFFSET
MD 21502, 253
TRACLG_G0_IS_SPECIAL
MD 21526, 256
TRACLG_GRINDSPI_HOR_OFFSET
MD 21501, 253
TRACLG_GRINDSPI_NR
MD 21522, 255
TRACLG_GRINDSPI_VERT_OFFSET
MD 21500, 253
TRACLG_HOR_DIR_SUPPORTAX_1
MD 21510, 254
TRACLG_HOR_DIR_SUPPORTAX_2
MD 21514, 254
TRACLG_SUPPORT_HOR_OFFSET
MD 21506, 254
TRACLG_SUPPORT_LEAD_ANGLE
MD 21516, 254
TRACLG_SUPPORT_VERT_OFFSET
MD 21504, 253
TRACLG_VERT_DIR_SUPPORTAX_1
MD 21508, 254
TRACLG_VERT_DIR_SUPPORTAX_2
MD 21512, 254
TRACON_CHAIN_3
MD 24997, 309
TRACON_CHAIN_4
MD 24998, 309
TRACON_CHAIN_5
MD 25495, 321
TRACON_CHAIN_6
MD 25496, 321
TRACON_CHAIN_7
MD 25497, 321
TRACON_CHAIN_8
MD 25498, 321
TRACYL_BASE_TOOL_1
MD 24820, 301
TRACYL_BASE_TOOL_2
MD 24870, 304
TRACYL_DEFAULT_MODE_1
MD 24808, 300
TRACYL_DEFAULT_MODE_2
MD 24858, 303
TRACYL_ROT_AX_FRAME_1
MD 24805, 300
TRACYL_ROT_AX_FRAME_2

MD 24855, 302
TRACYL_ROT_AX_OFFSET_1
MD 24800, 299
TRACYL_ROT_AX_OFFSET_2
MD 24850, 302
TRACYL_ROT_SIGN_IS_PLUS_1
MD 24810, 301
TRACYL_ROT_SIGN_IS_PLUS_2
MD 24860, 303
TRAFO_AXES_IN_1
MD 24110, 280
TRAFO_AXES_IN_10
MD 24482, 293
TRAFO_AXES_IN_11
MD 25102, 310
TRAFO_AXES_IN_12
MD 25112, 311
TRAFO_AXES_IN_13
MD 25122, 312
TRAFO_AXES_IN_14
MD 25132, 313
TRAFO_AXES_IN_15
MD 25142, 314
TRAFO_AXES_IN_16
MD 25152, 315
TRAFO_AXES_IN_17
MD 25162, 316
TRAFO_AXES_IN_18
MD 25172, 317
TRAFO_AXES_IN_19
MD 25182, 318
TRAFO_AXES_IN_2
MD 24210, 282
TRAFO_AXES_IN_20
MD 25192, 319
TRAFO_AXES_IN_3
MD 24310, 284
TRAFO_AXES_IN_4
MD 24410, 285
TRAFO_AXES_IN_5
MD 24432, 287
TRAFO_AXES_IN_6
MD 24442, 288
TRAFO_AXES_IN_7
MD 24452, 289
TRAFO_AXES_IN_8
MD 24462, 291
TRAFO_AXES_IN_9
MD 24472, 292
TRAFO_CHANGE_M_CODE
MD 22534, 265
TRAFO_GEOAX_ASSIGN_TAB_1
MD 24120, 280
TRAFO_GEOAX_ASSIGN_TAB_10
MD 24484, 293
TRAFO_GEOAX_ASSIGN_TAB_11
MD 25104, 310
TRAFO_GEOAX_ASSIGN_TAB_12
MD 25114, 311
TRAFO_GEOAX_ASSIGN_TAB_13
MD 25124, 312
TRAFO_GEOAX_ASSIGN_TAB_14
MD 25134, 313
TRAFO_GEOAX_ASSIGN_TAB_15
MD 25144, 314
TRAFO_GEOAX_ASSIGN_TAB_16
MD 25154, 315
TRAFO_GEOAX_ASSIGN_TAB_17
MD 25164, 316
TRAFO_GEOAX_ASSIGN_TAB_18
MD 25174, 317
TRAFO_GEOAX_ASSIGN_TAB_19
MD 25184, 318
TRAFO_GEOAX_ASSIGN_TAB_2
MD 24220, 283
TRAFO_GEOAX_ASSIGN_TAB_20
MD 25194, 319
TRAFO_GEOAX_ASSIGN_TAB_3
MD 24320, 284
TRAFO_GEOAX_ASSIGN_TAB_4
MD 24420, 286
TRAFO_GEOAX_ASSIGN_TAB_5
MD 24434, 287
TRAFO_GEOAX_ASSIGN_TAB_6
MD 24444, 288
TRAFO_GEOAX_ASSIGN_TAB_7
MD 24454, 290
TRAFO_GEOAX_ASSIGN_TAB_8
MD 24464, 291
TRAFO_GEOAX_ASSIGN_TAB_9
MD 24474, 292
TRAFO_INCLUDES_TOOL_1
MD 24130, 281
TRAFO_INCLUDES_TOOL_10
MD 24486, 293
TRAFO_INCLUDES_TOOL_11
MD 25106, 310
TRAFO_INCLUDES_TOOL_12
MD 25116, 311
TRAFO_INCLUDES_TOOL_13
MD 25126, 312
TRAFO_INCLUDES_TOOL_14
MD 25136, 313
TRAFO_INCLUDES_TOOL_15

MD 25146, 314
TRAFO_INCLUDES_TOOL_16
MD 25156, 315
TRAFO_INCLUDES_TOOL_17
MD 25166, 316
TRAFO_INCLUDES_TOOL_18
MD 25176, 317
TRAFO_INCLUDES_TOOL_19
MD 25186, 318
TRAFO_INCLUDES_TOOL_2
MD 24230, 283
TRAFO_INCLUDES_TOOL_20
MD 25196, 319
TRAFO_INCLUDES_TOOL_3
MD 24330, 285
TRAFO_INCLUDES_TOOL_4
MD 24426, 286
TRAFO_INCLUDES_TOOL_5
MD 24436, 287
TRAFO_INCLUDES_TOOL_6
MD 24446, 289
TRAFO_INCLUDES_TOOL_7
MD 24456, 290
TRAFO_INCLUDES_TOOL_8
MD 24466, 291
TRAFO_INCLUDES_TOOL_9
MD 24476, 292
TRAFO_MODE_MASK
MD 20144, 211
TRAFO_RESET_NAME
MD 20142, 210
TRAFO_RESET_VALUE
MD 20140, 210
TRAFO_TYPE_1
MD 24100, 278
TRAFO_TYPE_10
MD 24480, 293
TRAFO_TYPE_11
MD 25100, 309
TRAFO_TYPE_12
MD 25110, 310
TRAFO_TYPE_13
MD 25120, 311
TRAFO_TYPE_14
MD 25130, 312
TRAFO_TYPE_15
MD 25140, 313
TRAFO_TYPE_16
MD 25150, 314
TRAFO_TYPE_17
MD 25160, 315
TRAFO_TYPE_18
MD 25170, 316
TRAFO_TYPE_19
MD 25180, 317
TRAFO_TYPE_2
MD 24200, 282
TRAFO_TYPE_20
MD 25190, 318
TRAFO_TYPE_3
MD 24300, 284
TRAFO_TYPE_4
MD 24400, 285
TRAFO_TYPE_5
MD 24430, 286
TRAFO_TYPE_6
MD 24440, 288
TRAFO_TYPE_7
MD 24450, 289
TRAFO_TYPE_8
MD 24460, 290
TRAFO_TYPE_9
MD 24470, 292
TRAFO5_AXIS3_1
MD 24573, 294
TRAFO5_AXIS3_2
MD 24673, 294
TRAFO5_AXIS3_3
MD 25273, 320
TRAFO5_AXIS3_4
MD 25373, 320
TRAFO6_BASE_ORIENT_NORMAL_1
MD 24576, 294
TRAFO6_BASE_ORIENT_NORMAL_2
MD 24676, 295
TRAFO6_BASE_ORIENT_NORMAL_3
MD 25276, 320
TRAFO6_BASE_ORIENT_NORMAL_4
MD 25376, 320
TRAFO6_JOINT_OFFSET_2_3_1
MD 24561, 294
TRAFO6_JOINT_OFFSET_2_3_2
MD 24661, 294
TRAFO6_JOINT_OFFSET_2_3_3
MD 25261, 319
TRAFO6_JOINT_OFFSET_2_3_4
MD 25361, 320
Transferred axis-specific M and S functions, 585
Transferred D functions, 522
Transferred H functions, 522
Transferred M functions, 521
Transferred M/S functions, axis-specific, 532
Transferred S functions, 521
Transferred T functions, 521

TRANSMIT_BASE_TOOL_1
MD 24920, 306
TRANSMIT_BASE_TOOL_2
MD 24970, 309
TRANSMIT_POLE_SIDE_FIX_1
MD 24911, 306
TRANSMIT_POLE_SIDE_FIX_2
MD 24961, 308
TRANSMIT_ROT_AX_FRAME_1
MD 24905, 305
TRANSMIT_ROT_AX_FRAME_2
MD 24955, 307
TRANSMIT_ROT_AX_OFFSET_1
MD 24900, 304
TRANSMIT_ROT_AX_OFFSET_2
MD 24950, 307
TRANSMIT_ROT_SIGN_IS_PLUS_1
MD 24910, 305
TRANSMIT_ROT_SIGN_IS_PLUS_2
MD 24960, 308
TU_NAME
MD 10672, 74

U

UNLOCK_EDIT_MODESWITCH
MD 10780, 89
UPLOAD_MD_CHANGES_ONLY
MD 11210, 108
USE_FIXPOINT_MANUAL_MA
MD 1099, 31
USEKT_RESET_VALUE
MD 20123, 208
User, 513
User alarm
Activation, 515
Configuration (MD 14516 USER_DATA_PLC_ALARM), 540
User data2, 513
User data, 513
User data 1, 513
USER_CLASS_DIR_ACCESS
MD 221, 19
USER_CLASS_LADDER_VIEW
MD 378, 27
USER_CLASS_PLC_ACCESS
MD 222, 20
USER_CLASS_READ_CUSS_DIR
MD 375, 26
USER_CLASS_READ_PROGRAM
MD 213, 19
USER_CLASS_READ_TOA
MD 207, 18
USER_CLASS_SELECT_PROGRAM
MD 215, 19
USER_CLASS_SET_V24
MD 219, 19
USER_CLASS_WRITE_CMA_DIR
MD 386, 28
USER_CLASS_WRITE_CUS_DIR
MD 376, 26
USER_CLASS_WRITE_CYCLES
MD 217, 19
USER_CLASS_WRITE_LOC_NO
MD 392, 28
USER_CLASS_WRITE_PROGRAM
MD 214, 19
USER_CLASS_WRITE_PWA
MD 223, 20
USER_CLASS_WRITE_RPA
MD 218, 19
USER_CLASS_WRITE_SEA
MD 212, 19
USER_CLASS_WRITE_TO_MON_DAT
MD 377, 27
USER_CLASS_WRITE_TOA_GEO
MD 208, 18
USER_CLASS_WRITE_TOA_WEAR
MD 209, 18
USER_CLASS_WRITE_ZOA
MD 210, 18
USER_DATA_FLOAT
MD 14514, 148
USER_DATA_HEX
MD 14512, 148
USER_DATA_INT
MD 14510, 148
USER_DATA_PLC_ALARM
MD 14516, 148
USER_FRAME_POWERON_MASK
MD 24080, 278
USER_MANUAL_MA_SHOW_PAGE_NO
MD 401, 29
USER_MANUAL_MA_TOOL_CHANGE
MD 400, 29
USER_MEAS_TOOL_CHANGE
MD 361, 25
USER_TOOL_CHG_MANUAL_MA
MD 1101, 31

V

V1700 0000.5, 544
V1700 0000.6, 544

V1700 0001.3, 544
V1700 0001.7, 545
V1700 0002, 545
V1700 0003.0 to .1, 545
V1700 0003.7 ***, 545
V1800 0000.0, 546
V1800 0000.1, 546
V1800 0000.2, 546
V1800 0000.4, 546
V1800 0000.6 ***, 547
V1800 0001.2, 547
V1900 0000.6, 547
V1900 0003.7, 548
V1900 0004.7, 548
V1900 1003.0 to .2, 548
V1900 1004.0 to .2, 548
V1900 5001.0, 549
V1900 5002.0, 549
V24_PG_PC_BAUD
MD 247, 20
V24_PPI_ADDR_DRV1
MD 383, 27
V24_PPI_ADDR_MMC
MD 343, 24
V24_PPI_ADDR_NCK
MD 281, 20
V24_PPI_ADDR_PLC
MD 280, 20
V24_PPI_MODEM_ACTIVE
MD 344, 24
V24_PPI_MODEM_BAUD
MD 345, 24
V24_PPI_MODEM_PARITY
MD 346, 24
V2500 0004. 0 to .4, 550
V2500 0006.0, 550
V2500 0008.0, 550
V2500 0010.0, 550
V2500 0012.0 to .2, 550
V2600 0000.1, 553
V2600 0000.2, 553
V2600 0001.0, 554
V2700 0000.1, 554
V2700 0001.0, 554
V2700 0001.7, 554
V2700 0004.0 to .7, 555
V2700 0008.0 to .7, 555
V3000 0000.0, 556
V3000 0000.0 to .6, 558
V3000 0000.1, 556
V3000 0000.2, 557
V3000 0000.4, 557
V3000 0000.7, 557
V3000 0001.2, 557
V3100 0000.0, 558
V3100 0000.1, 559
V3100 0000.2, 559
V3100 0000.3, 559
V3100 0001.2, 560
V3200 000.5, 561
V3200 0000.4, 560
V3200 0000.6, 561
V3200 0001.0, 561
V3200 0001.7, 562
V3200 0002.0, 562
V3200 0003.0, 562
V3200 0003.1, 562
V3200 0003.2, 563
V3200 0003.3, 563
V3200 0003.4, 563
V3200 0003.5, 563
V3200 0006.0, 566
V3200 0006.1, 567
V3200 0006.4, 567
V3200 0006.6, 568
V3200 0006.7, 568
V3200 0007.0, 569
V3200 0007.1, 569
V3200 0007.2, 569
V3200 0007.3, 570
V3200 0007.4, 571
V3200 0013.5, 571, 572
V3200 1000.0 to .1, 572
V3200 1000.3, 572
V3200 1000.4, 573
V3200 1000.5, 573
V3200 1000.7 and .6, 573
V3200 1001.0 to .6, 575
V3200 1004.0 to .1, 572
V3200 1004.3, 572
V3200 1004.4, 573
V3200 1004.5, 573
V3200 1004.7 and .6, 573
V3200 1005.0 to .6, 575
V3200 1008.0 to .1, 572
V3200 1008.3, 572
V3200 1008.4, 573
V3200 1008.5, 573
V3200 1008.7 and .6, 573
V3200 1009.0 to .6, 575
V3300 0000.3, 575
V3300 0000.4, 576
V3300 0000.5, 576
V3300 0000.6, 576

V3300 0001.0, 576
V3300 0001.2, 577
V3300 0001.4, 577
V3300 0001.5, 577
V3300 0001.6, 578
V3300 0001.7, 578
V3300 0003.0, 578
V3300 0003.2, 579
V3300 0003.3, 579
V3300 0003.4, 579
V3300 0003.5, 580
V3300 0003.6, 580
V3300 0003.7, 580
V3300 0004.2, 580
V3300 0004.3, 581
V3300 0006.0, 581
V3300 0006.1, 581
V3300 0008, 581
V3300 0009, 581
V3300 0010, 582
V3300 0011, 582
V3300 0012, 582
V3300 0013, 582
V3300 0014, 582
V3300 0015, 582
V3300 1000.0 to .1, 583
V3300 1000.7 and .6, 583
V3300 1001.0, ..., .6, 584
V3300 1004.0 to .1, 583
V3300 1004.7 and .6, 583
V3300 1005.0, ..., .6, 584
V3300 1008.0 to .1, 583
V3300 1008.7 and .6, 583
V3300 1009.0, ..., .6, 584
V3300 4001.1, 584
V380x 0001.1, 588
V380x 0001.2, 588
V380x 0001.7, 588
V380x 0002.0, 589
V380x 0002.2, 589
V380x 0002.3, 590
V380x 0003.1, 590
V380x 0003.6, 591
V380x 0004.0 to .2, 591
V380x 0004.3, 592
V380x 0004.4, 593
V380x 0004.5, 593
V380x 0004.7 and .6, 594
V380x 0005.0 to .6, 595
V380x 1000.1 and .0, 595
V380x 2000.0 to .2, 596
V380x 2000.3, 597
V380x 2001.0, 598
V380x 2001.4, 598
V380x 2001.6, 598
V380x 2002.4, 599
V380x 2002.5, 599
V380x 2002.7 / .6, 600
V380x1000.3 or .2, 596
V380x1000.7, 596
V390x 0000.0, 602
V390x 0000.2, 602
V390x 0000.4, 603
V390x 0000.6, 603
V390x 0000.7, 604
V390x 0002.3, 604
V390x 0002.4, 604
V390x 0002.5, 604
V390x 0004.0 to .2, 605
V390x 0004.7 and .6, 605
V390x 0005.0, ..., .6, 606
V390x 2000.0 to .2, 606
V390x 2000.3, 607
V390x 2001.0, 607
V390x 2001.1, 608
V390x 2001.2, 608
V390x 2001.5, 609
V390x 2001.7, 609
V390x 2002.0, 610
V390x 2002.3, 610
V390x 2002.5, 610
V390x 2002.6, 611
V390x 2002.7, 611
V390x5004.2, 611
V390x5004.3, 611
V390x5004.4, 612
V390x5004.5, 612
V5300 0000.0, 613
V5300 0000.1, 613
Variable for alarm, 516
VB2500 1000, 550
VB2500 1012, 550
VB2500 3004, 551
VB2500 3012, 551
VB2500 3020, 551
VB2500 3028, 551
VB2500 3036, 551
VB2500 4004, 551
VB2500 4012, 551
VB3200 0004, 564
VB3200 0005, 565
VB380x 0000, 587
VB380x 2003, 601
VD1900 5004, 550

VD2500 2000, 551
VD2500 3000, 551
VD2500 3008, 551
VD2500 3016, 551
VD2500 3024, 551
VD2500 3032, 551
VD2500 4000, 551
VD2500 4008, 551
VD2500 5000, 552
VD2500 6000, 552
VD2500 6008, 552
VD2500 6016, 552
VD370x 0000, 585
VD370x 0004, 586
VD5300 1000, 613
VD5300 1004, 614
VDI_FUNCTION_MASK
MD 17900, 155
VDI_UPDATE_IN_ONE_IPO_CYCLE
MD 18000, 156
VELO_FFW_WEIGHT
MD 32610, 389
VERSION_INFO
MD 18040, 156
VW2500 6004, 552
VW2500 6012, 552
VW2500 6020, 552

W

WAB_CLEARANCE_TOLERANCE
MD 20204, 221
WAB_MAXNUM_DUMMY_BLOCKS
MD 20202, 220
WALIM_GEOAX_CHANGE_MODE
MD 10604, 70
WEAR_SIGN
MD 42930, 493
WEAR_SIGN_CUTPOS
MD 42920, 492
WEAR_TRANSFORM
MD 42935, 493
WEIGHTING_FACTOR_FOR_SCALE
MD 22910, 271
WHEEL_TYPE_MASK
MD 384, 27
WORKAREA_CHECK_TYPE
MD 30800, 360
WORKAREA_LIMIT_MINUS
MD 43430, 502
WORKAREA_LIMIT_PLUS
MD 43420, 502
WORKAREA_MINUS_ENABLE
MD 43410, 502
WORKAREA_PLUS_ENABLE
MD 43400, 501
WORKAREA_WITH_TOOL_RADIUS
MD 21020, 248
WPD_INI_MODE
MD 11280, 111

X

X_AXIS_IN_OLD_X_Z_PLANE
MD 21110, 249