WiseNet III Plus | Night Tracker

SNP-6320RH

2Megapixel Full HD 32x Network IR PTZ Dome Camera



Key Features

- Max. 2M (1920 x 1080) resolution
- 16 : 9 Full HD (1080p) resolution support
- 4.4 ~ 140.8mm (32x) IR corrected optical zoom, 16x digital zoom
- H.264, MJPEG dual codec, Multiple streaming
- Day & Night (ICR), WDR (120dB)
- Auto tracking, Intelligent video analytics
- SD/SDHC/SDXC memory slot, Bi-directional audio support
- IP66, IK10, IR LED (2ea)

Dimensions

Unit : mm (inch)

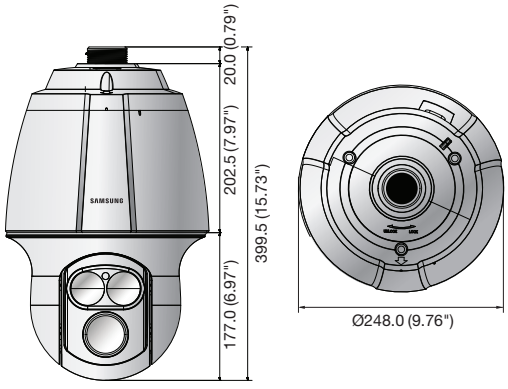

Accessories (Optional)



SBP-300WM1 SBP-300WM SBP-300CM SBP-300LM SBP-300B SBP-300PM SBP-300KM

	SNP-6320RHN/P
VIDEO	
Imaging Device	1/2.8" 2.38M CMOS
Total / Effective Pixels	1,952(H) x 1,116(V), 2.18M pixels / 1,944(H) x 1,104(V), 2.14M pixels
Scanning System	Progressive
Min. Illumination	Color : 0.3Lux (1/30sec, F1.6, 50IRE), 0.005Lux (2sec, F1.6, 50IRE) 0.1Lux (1/30sec, F1.6, 30IRE), 0.0005Lux (2sec, F1.6, 30IRE) B/W : 0Lux (IR LED on)
S / N Ratio	50dB
Video Output	CVBS : 1.0 Vpp / 75Ω composite, 720 x 480(N), 720 x 576(P), for installation
LENS	
Focal Length (Zoom Ratio)	4.4 ~ 140.8mm (Optical 32x)
Max. Aperture Ratio	F1.6(Wide) / F4.9(Tele)
Angular Field of View	H : 63.68°(Wide) ~ 2.24°(Tele) / V : 37.52°(Wide) ~ 1.28°(Tele)
Min. Object Distance	1.5m (4.92ft)
Focus Control	AF / One-shot AF / Manual
Lens / Mount Type	DC auto iris (IR corrected) / Board-in type
PAN / TILT / ROTATE	
Pan / Tilt Range	360° Endless / 190° (-5° ~185°)
Pan / Tilt Speed	Preset : 250°/sec, Manual : 0.024°/sec ~ 120°/sec
Sequence / Preset Accuracy	Preset (255ea), Swing, Group (6ea), Trace, Tour, Auto run, Schedule / ±0.2°
Azimuth	Yes (E / W / S / N / NE / SE / NW / SW OSD)
Auto Tracking	Off / On
OPERATIONAL	
IR LED	2ea
Viewable Length	150m (492.13ft)
Camera Title	Off / On (Displayed up to 15 characters)
Day & Night	Auto (ICR) / Color / B/W
Backlight Compensation	Off / BLC / HLC / WDR
Wide Dynamic Range	120dB
Contrast Enhancement	SSDR (Samsung Super Dynamic Range) (Off / On)
Digital Noise Reduction	SSNRIII (2D+3D noise filter) (Off / On)
Digital Image Stabilization	Off / On
Defog	Off / Auto / Manual
Motion Detection	Off / On (4ea, Rectanglular zones)
Privacy Masking	Off / On (32ea, Rectanglular zones) - Color : Grey / Green / Red / Blue / Black / White, - Zoom ratio option for mask mode
Gain Control	Off / Low / Medium / High / Manual
White Balance	ATW / AWC / Manual / Indoor / Outdoor / Mercury / Sodium
Electronic Shutter Speed	Minimum / Maximum / Anti flicker (2 ~ 1/12,000sec)
Digital Zoom	16x, area zoom funtion support digital zoom 2x
Flip / Mirror	Off / On
Intelligent Video Analytics	Tampering (Scene change), Virtual line, Enter / Exit, (Dis)Appear, Audio detection, Face detection
Alarm I/O	Input 4ea / Output 3ea (Relay type)
Remote Control Interface	RS-485/422
RS-485 Protocol	Samsung-T/E, Pelco-P/D, Panasonic, Honeywell, AD, Vicon, Bosch, GE
Alarm Triggers	Alarm input, Motion detection, Intelligent video analytics, Network disconnect
Alarm Events	File upload via FTP and E-mail, Notification via E-mail, Local storage(SD/SDHC) or NAS recording at Network disconnected, External output, PTZ preset
NETWORK	
Ethernet	RJ-45 (10/100BASE-T)
Video Compression Format	H.264 (MPEG-4 Part 10/AVC) : Main / Baseline / High, MJPEG
Resolution	1920 x 1080, 1280 x 1024, 1280 x 960, 1280 x 720, 1024 x 768, 800 x 600, 720 x 576, 640 x 480, 640 x 360, 320 x 240, 320 x 180
Max. Framerate	H.264 : Max. 60fps at all resolutions MJPEG : 1920 x 1080, 1280 x 1024, 1280 x 960, 1280 x 720, 1024 x 768 : Max. 15fps 800 x 600, 720 x 576, 640 x 480, 640 x 360, 320 x 240, 320 x 180 : Max. 30fps
Smart Codec	Manual mode (Area-based : 5ea), Face detection mode
Video Quality Adjustment	H.264 : Compression level, Target bitrate level control, MJPEG : Quality level control
Bitrate Control Method	H.264 : CBR or VBR, MJPEG : VBR
Streaming Capability	Multiple streaming (Up to 10 profiles)
Audio In	Selectable (Mic in / Line in), Supply voltage : 2.5V DC (4mA), Input impedance : approx. 2K Ohm
Audio Out	Line out (3.5mm stereo mini jack), Max output level : 1 Vrms
Audio Compression Format	G.711 u-law/G.726 selectable, G.726 (ADPCM) 8KHz, G.711 8KHz, G.726 : 16Kbps, 24Kbps, 32Kbps, 40Kbps
Audio Communication	Bi-directional audio (2-way)
IP	IPv4, IPv6
Protocol	TCP/IP, UDP/IP, RTP(UDP), RTP(TCP), RTCP, RTSP, NTP, HTTP, HTTPS, SSL, DHCP, PPPoE, FTP, SMTP, ICMP, IGMP, SNMPv1/v2c/v3(MIB-2), ARP, DNS, DDNS, QoS, PIM-SM, UPnP, Bonjour
Security	HTTPS(SSL) login authentication, Digest login authentication IP address filtering, User access log, 802.1x authentication (EAP-TLS, EAP-LEAP)
Streaming Method	Unicast / Multicast
Max. User Access	15 users at unicast mode
Edge Storage	SD/SDHC/SDXC (Up to 128G) Motion Images recorded in the SD/SDHC/SDXC memory card can be downloaded NAS (Network Attached Storage), Local PC for instant recording
Application Programming Interface	ONVIF profile S, SUNAPI (HTTP API), SVNP 1.2, Samsung Techwin Open Platform
Webpage Language	English, French, German, Spanish, Italian, Chinese, Korean, Russian, Japanese, Swedish, Danish, Portuguese, Turkish, Polish, Czech, Rumanian, Serbian, Dutch, Croatian, Hungarian, Greek, Finnish, Norwegian
Web Viewer	Supported OS : Windows XP / VISTA / 7 / 8, MAC OS X 10.7 Supported Browser : Microsoft Internet Explorer (Ver.8 ~ 11), Mozilla Firefox (Ver. 9 ~ 19), Google Chrome (Ver. 15 ~ 25), Apple Safari (Ver. 6.0.2(Mac OS X 10.8, 10.7 only), 5.1.7) * Mac OS X only
Central Management Software	SmartViewer, SSM
ENVIRONMENTAL	
Operating Temperature / Humidity	-50°C ~ +55°C (-58°F ~ +131°F) / Less than 90% RH
Storage Temperature / Humidity	-30°C ~ +60°C (-22°F ~ +140°F) / Less than 90% RH
Ingress Protection / Vandal Resistance	IP66 / IK10
ELECTRICAL	
Input Voltage / Current	24V AC only / 6A
Power Consumption	Max. 30W (Heater off) / Max. 35W/90W (Heater off/on, IR on)
MECHANICAL	
Color / Material	Ivory / Aluminum
Dimensions (WxH)	Ø248.0 x 399.5mm (Ø9.76" x 15.73")
Weight	7.1Kg (15.65 lb)

* The latest product information / specification can be found at www.samsungsecurity.com