I. INTRODUCTION

The RICON PF5000 Series Low-Floor Vehicle Access Ramp is an electrically operated ramp that provides vehicle access to people using mobility equipment (wheelchairs, scooters). The ramp has been designed for custom installations and is operated by the vehicle driver using a dashboard mounted control switch or an optional controller interface kit.

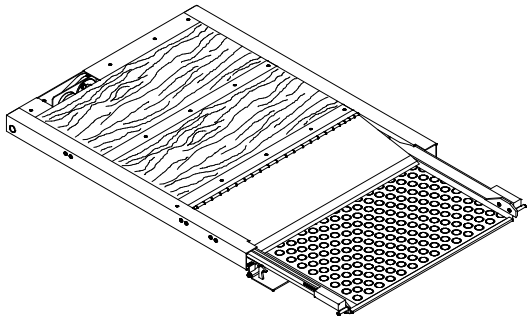

When the vehicle is safely parked with the doors open, and the driver holds the control switch in the DEPLOY position, the ramp extends from the vehicle and stops when it contacts the ground. As a safety function, movement will automatically stop if the ramp encounters an obstruction. After the passenger enters the vehicle, the driver holds the switch in the STOW position and the ramp retracts into the vehicle. The rated load capacity is 750 pounds (341 kilograms).

This manual contains operation and maintenance instructions for the ramp. For installation instructions please refer to the Service Manual. It is important to user safety that the vehicle operators be completely familiar with the operating instructions. Once the ramp is installed, it is very important that it be properly maintained by following the Ricon recommended cleaning, lubrication, and inspection instructions.

If there are questions about this manual, or additional copies are needed, please contact Ricon Product Support at one of the following locations:

Ricon Corporation
7900 Nelson Road
Panorama City, CA 91402 ..... (818) 267-3000
Outside (818) Area Code ..... (800) 322-2884
World Wide Website ..... www.riconcorp.com

Ricon U.K. Ltd.
Littlemoss Business Park, Littlemoss Road
Droylsden, Manchester
United Kingdom, M43 7EF ..... (+44) 161 301 6000

A. RICON TWO-YEAR LIMITED WARRANTY (refer to following page)

RICON CORPORATION
TWO-YEAR LIMITED WARRANTY

Ricon Corporation (Ricon) warrants to original purchaser of this product that Ricon will repair or replace, at its option, any part that fails due to defective material or workmanship as follows:

- Repair or replace parts for a period of two years from the date of purchase. A complete list of parts covered by this warranty can be obtained from Ricon Product Support.
- Labor costs for specified parts replace under this warranty for a period of two years from the date of purchase. A Ricon rate schedule determines the parts covered and labor allowed.

If You Need to Return a Product: Return this product to Ricon. Please give as much advance notice as possible and allow a reasonable amount of time for repairs.

This Warranty does not Cover:

- Malfunction or damage to product parts caused by accident, misuse, lack of proper maintenance, neglect, improper adjustment, modification, alteration, the mechanical condition of vehicle, road hazards, overloading, failure to follow operating instructions, or acts of Nature (i.e., weather, lightning, flood).

Note: Ricon recommends that this product be inspected by an authorized Ricon service technician at least once every six months, or sooner if necessary. Any required maintenance should be performed at that time.

⚠ WARNING!

THIS PRODUCT HAS BEEN DESIGNED AND MANUFACTURED TO EXACT SPECIFICATIONS. MODIFICATION OF THIS PRODUCT IN ANY RESPECT CAN BE DANGEROUS.

This Warranty is Void if:

- The product has been installed or maintained by someone other than an authorized Ricon service technician.
- The product has been modified or altered in any respect from its original design without written authorization by Ricon.

Ricon disclaims liability for any personal injury or property damage that results from operation of a Ricon product that has been modified from the original Ricon design. No person or company is authorized to change the design of this Ricon product without written authorization by Ricon.

Ricon's obligation under this warranty is exclusively limited to the repair or exchange of parts that fail within the applicable warranty period.

Ricon assumes no responsibility for expenses or damages, including incidental or consequential damages. Some states do not allow the exclusion or limitation of incidental or consequential damages, so the above limitation or exclusion may not apply.

Important: The warranty registration card must be completed and returned to Ricon within 20 days after installation of this Ricon product for the warranty to be valid. The warranty is not transferable.

The warranty gives specific legal rights, and there may be other rights that vary from state to state.

B. SHIPMENT INFORMATION

- When the product is received, unpack the product and check for freight damage. Claims for any damage should be made to the carrier immediately.
- Be sure the installation kit contains all items listed on the kit packing list. Please report any missing items immediately to Ricon Product Support. The warranty and owner's registration cards must be completed and returned to Ricon within 20 days for the warranty to be valid.

NOTE: The Sales/Service Personnel must review the Warranty and this Operator Manual with the user to be certain that they understand the safe operation of the product. Instruct the user to follow the operating instructions without exception.

C. GENERAL SAFETY PRECAUTIONS

The following general safety precautions must be followed during installation, operation, service and maintenance:

- To avoid injury, always exercise caution when operating ramp, and be certain that hands, feet, legs, and clothing are not in the path of ramp movement.
- Read and thoroughly understand the operating instructions before attempting to operate.
- Inspect the product before each use. If an unsafe condition, unusual noise or movements exist, do not use until the problem is corrected.
- Keep others clear during operation.
- The product requires periodic maintenance. A thorough inspection is recommended at least once every six months. The product must always be maintained at the highest level of performance.

D. PRODUCT TERMINOLOGY

The references for the ramp are illustrated in **Figure 1-1** and defined in **Table 1-1**. Refer to Service Manual, Chapter IV, Parts Diagrams and Lists for more details.

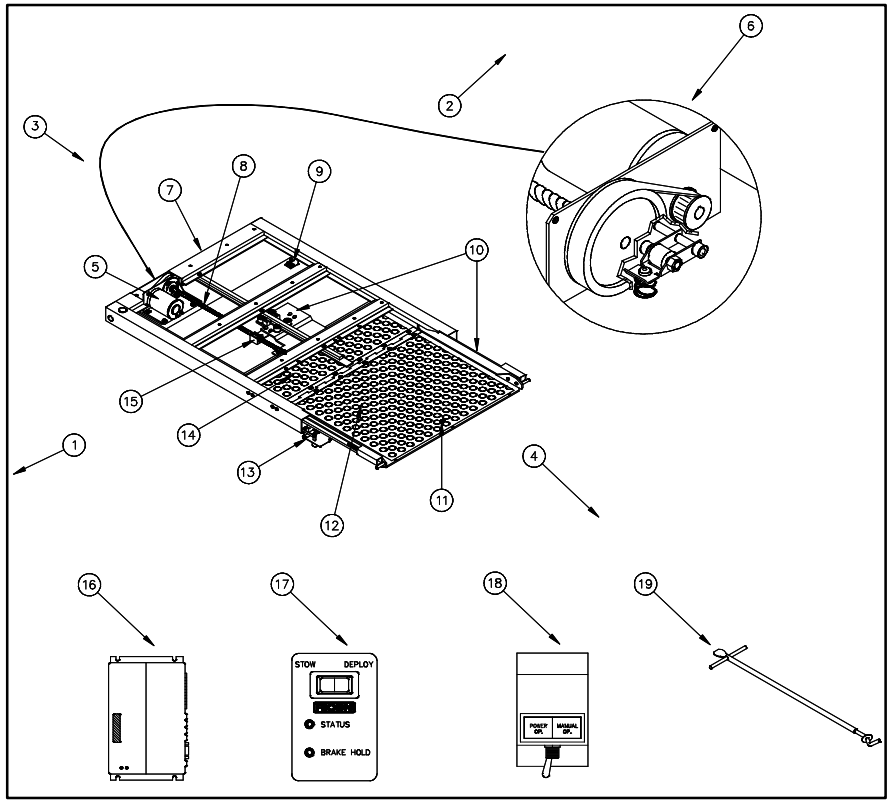

FIGURE 1-1: RAMP REFERENCES

TABLE 1-1: PF5000 RAMP TERMINOLOGY		
REF	**NAME**	**DESCRIPTION**
1	Left	Reference point from outside the vehicle looking inward.
2	Right	
3	Back	
4	Front	
5	Drive System Motor	Electric motor used to operate the ramp.
6	Belt Failure Ratchet	A mechanism to keep the ramp from deploying if the drive system belt breaks.
7	Ramp Enclosure	Cassette type enclosure, rigidly attached to the vehicle, which contains the ramp.
8	Drive System	Components used to extend/DEPLOY and retract/ STOW the ramp.
9	Sensor Assembly	Magnetic device used to signal the ramp controller when the ramp is in the fully stowed position.
10	Traveling Frame	Mechanical assemblies that operate the ramp and maintain ramp-assembly alignment.
11	Manual Deploy Hole	Insertion point for the manual operation lever.
12	Ramp Assembly	Assembly that extends from the vehicle during ramp operation.
13	Enclosure Door	Mechanical door that protects the ramp internal components from road debris, etc.
14	Carriage Assembly	Mechanical assembly that operates the ramp assembly.
15	Ball Nut/Screw Assembly	Mechanical component of the drive system used to extend and retract the ramp.
16	Ramp Controller	Electronically controls all of the ramp functions and safety features.
17	Optional Ramp Control Panel	Electrically STOW and DEPLOY the ramp and shows the status of the ramp with indicator lights.
18	Optional Manual Operation Panel	Enables the operator to use the ramp either electrically or manually.
19	Manual Operation Lever	Used to manually stow and deploy the ramp.
END OF TABLE		

NEXT CHAPTER