OD8025 Series

DC Fans - 12, 24, 48V
80mm x 25mm (3.15” x 1.0”)



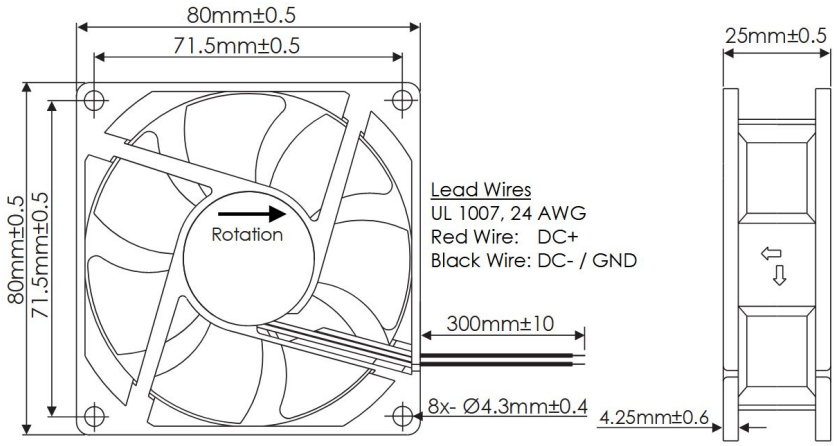

Frame	PBT, UL94 V-0 Plastic
Impeller	PBT, UL94 V-0 Plastic
Connection	2x Lead Wires, 24 AWG
Motor	Brushless DC, Auto Cutoff, Auto Restart, Polarity Protected, Electronically Protected
Bearing System	Dual Ball Bearings
Dielectric Strength	500VDC/min, <1mA
Insulation Resistance	≥10MΩ @ 500V DC

Operating Temperature
-20°C ~ +65°C

Storage Temperature
-25°C ~ +75°C

Life Expectancy
70,000 Hours (L10 at 40°C)

Available Options
Tachometer Output
Alarm Output
PWM Speed Control Input
IP Ratings
Sleeve Bearings
Other Voltages and Speeds

Weight: 0.18 lbs.

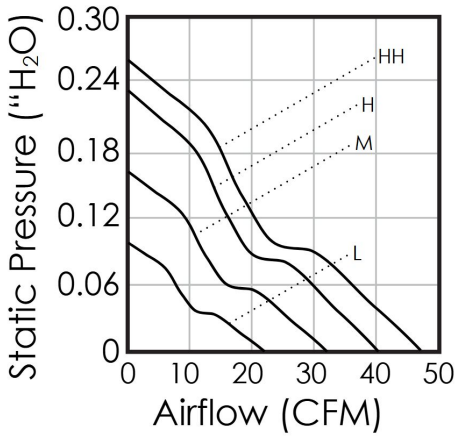

Part Number	Rated Voltage (Volts DC)	Voltage Range (Volts DC)	Input Power (Watts)	Rated Current (Amps)(Max)	Rated Speed (RPM)	Max Airflow (CFM)	Noise Level (dBA)	Max Static Pressure (“H_2O)
OD8025-12HHB	12	8 ~ 13.8	2.2	0.18	3800	47.8	35	0.26
OD8025-12HB	12	8 ~ 13.8	2.2	0.18	3300	40.1	33	0.23
OD8025-12MB	12	8 ~ 13.8	1.8	0.15	2700	31.7	28	0.16
OD8025-12LB	12	8 ~ 13.8	1.4	0.12	2000	21.9	21	0.10
OD8025-24HHB	24	14 ~ 26.4	4.8	0.20	3800	47.8	35	0.26
OD8025-24HB	24	14 ~ 26.4	2.9	0.12	3300	40.1	33	0.23
OD8025-24MB	24	14 ~ 26.4	2.4	0.10	2700	31.7	28	0.16
OD8025-24LB	24	14 ~ 26.4	2.0	0.08	2000	21.9	21	0.10
OD8025-48HHB	48	34 ~ 60.0	3.8	0.08	3800	47.8	35	0.26
OD8025-48HB	48	34 ~ 60.0	3.4	0.07	3300	40.1	33	0.23

Knight Electronics, Inc.
10557 Metric Drive
Dallas, TX 75243
214-340-0265

Revised 6/13/2025
m0

c UL us E170149 CE UKCA RoHS TÜV

Orion Fans

Information and data is subject to change without prior notification

OD8025 5 Volt Series

DC Fans - 5V
80mm x 25mm (3.15” x 1.0”)



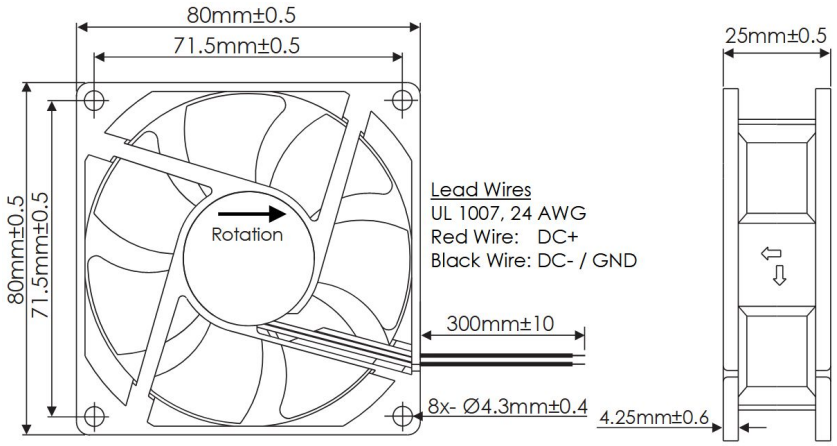

Frame	PBT, UL94 V-0 Plastic
Impeller	PBT, UL94 V-0 Plastic
Connection	2x Lead Wires, 24 AWG
Motor	Brushless DC, Auto Cutoff, Auto Restart, Polarity Protected, Electronically Protected
Bearing System	Dual Ball Bearings
Dielectric Strength	500VDC/min, <1mA
Insulation Resistance	≥10MΩ @ 500V DC

Operating Temperature
-20°C ~ +65°C

Storage Temperature
-25°C ~ +75°C

Life Expectancy
60,000 Hours (L10 at 45°C)

Available Options
Tachometer Output
Alarm Output
PWM Speed Control Input

Weight: 0.18 lbs.

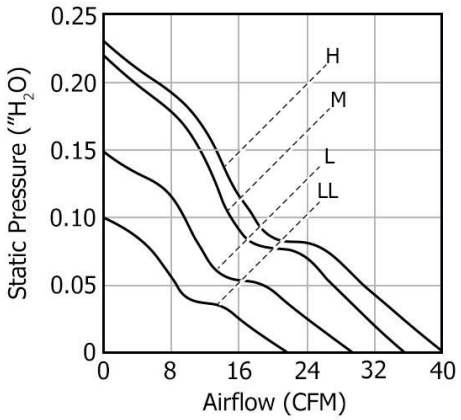

Part Number	Rated Voltage (Volts DC)	Voltage Range (Volts DC)	Input Power (Watts)	Rated Current (Amps)(Max)	Rated Speed (RPM)	Max Airflow (CFM)	Noise Level (dBA)	Max Static Pressure (“H_2O)
OD8025-05HB	5	4.5 ~ 5.5	1.4	0.38	3190	40	33	0.23
OD8025-05MB	5	4.5 ~ 5.5	1.4	0.28	2775	34	32	0.22
OD8025-05LB	5	4.5 ~ 5.5	1.0	0.20	2185	29	27	0.15
OD8025-05LLB	5	4.5 ~ 5.5	0.8	0.15	1750	22	21	0.10

Knight Electronics, Inc.
10557 Metric Drive
Dallas, TX 75243
214-340-0265

Revised 6/13/2025
m0

E170149

RoHS

Orion Fans

Information and data is subject to change without prior notification

OD8025 Series
with PWM and Tachometer

DC Fans - 12, 24, 48V
80mm x 25mm (3.15" x 1.0")



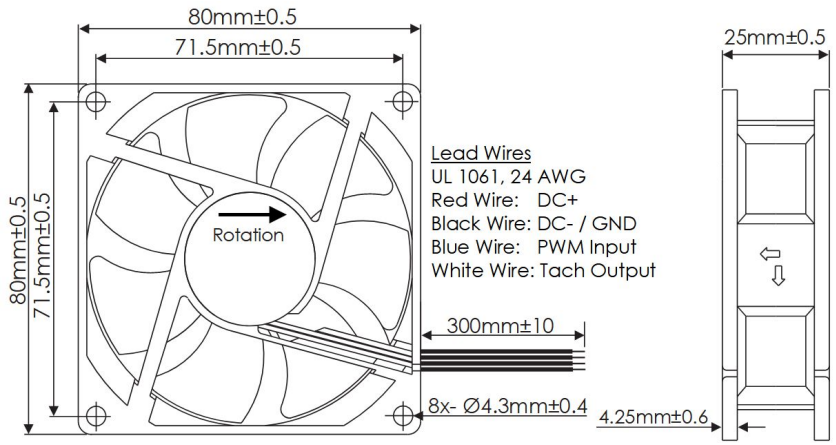

Frame	PBT, UL94 V-0 Plastic
Impeller	PBT, UL94 V-0 Plastic
Connection	4x Lead Wires, 24 AWG
Motor	Brushless DC, Auto Cutoff, Auto Restart, Polarity Protected, Electronically Protected
Bearing System	Dual Ball Bearings
Dielectric Strength	500VDC/min, <1mA
Insulation Resistance	≥10MΩ @ 500V DC

Operating Temperature
-20°C ~ +65°C

Storage Temperature
-25°C ~ +75°C

Life Expectancy
60,000 Hours (L10 at 45°C)

Installed Options
PWM Speed Control Input
Open Collector Tach Output

Available Options
5V TTL Tach Output

Weight: 0.18 lbs.

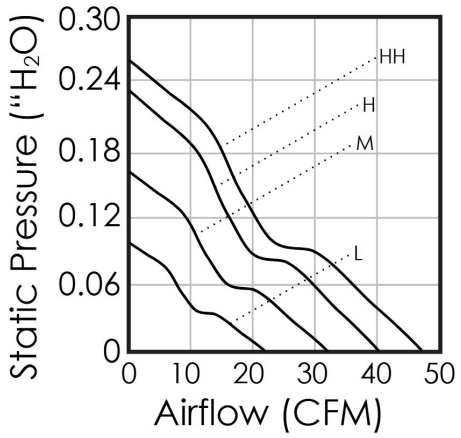

Part Number	Rated Voltage (Volts DC)	Voltage Range (Volts DC)	Input Power (Watts)	Rated Current (Amps)(Max)	Rated Speed (RPM)	Max Airflow (CFM)	Noise Level (dBA)	Max Static Pressure ("H_2O)
OD8025-12HHB10A	12	8 ~ 13.8	2.2	0.18	3800	47.8	35	0.26
OD8025-12HB10A	12	8 ~ 13.8	2.2	0.18	3300	40.1	33	0.23
OD8025-12MB10A	12	8 ~ 13.8	1.8	0.15	2700	31.7	28	0.16
OD8025-12LB10A	12	8 ~ 13.8	1.4	0.12	2000	21.9	21	0.10
OD8025-24HHB10A	24	14 ~ 26.4	4.8	0.20	3800	47.8	35	0.26
OD8025-24HB10A	24	14 ~ 26.4	2.9	0.12	3300	40.1	33	0.23
OD8025-24MB10A	24	14 ~ 26.4	2.4	0.10	2700	31.7	28	0.16
OD8025-24LB10A	24	14 ~ 26.4	2.0	0.08	2000	21.9	21	0.10
OD8025-48HHB10A	48	34 ~ 60.0	3.8	0.08	3800	47.8	35	0.26
OD8025-48HB10A	48	34 ~ 60.0	3.4	0.07	3300	40.1	33	0.23

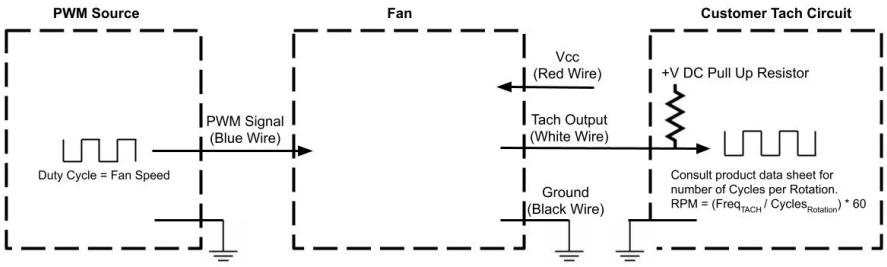

PWM Max High Voltage: 5.5V
PWM Max Sink Current: 5mA
PWM Frequency Range: 1KHz-100KHz
PWM Typical Frequency: 25KHz
RPM at 0% Duty Cycle: 0 RPM
RPM will be full speed if PWM input is disconnected.
RPM will be 0 if PWM input is 0V or grounded.
Tach Max Pullup Voltage: Fan Vcc
Tach Max Sink Current: 5mA
Tach Cycles per Rotation: 2

Knight Electronics, Inc.
10557 Metric Drive
Dallas, TX 75243
214-340-0265

Revised 6/13/2025
m0

c UL us E170149 CE UKCA RoHS TÜV

Orion Fans

Information and data is subject to change without prior notification

OD8025 Series with Tachometer

DC Fans - 12, 24, 48V
80mm x 25mm (3.15” x 1.0”)



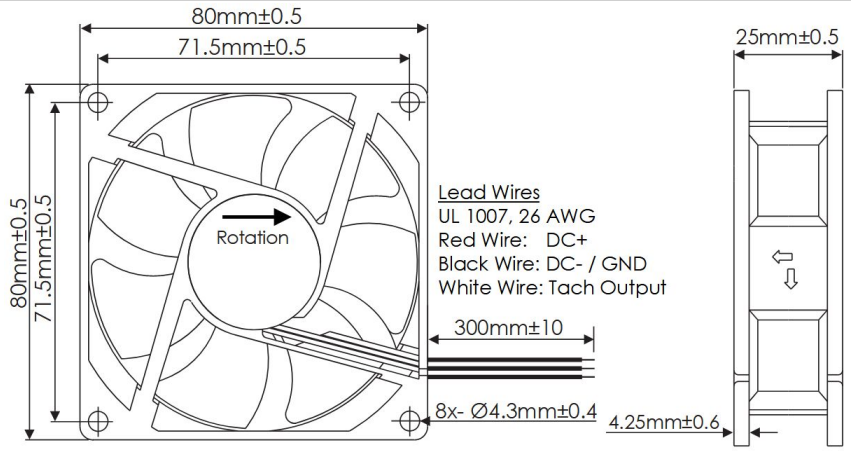

Frame	PBT, UL94 V-0 Plastic
Impeller	PBT, UL94 V-0 Plastic
Connection	3x Lead Wires, 26 AWG
Motor	Brushless DC, Auto Cutoff, Auto Restart, Polarity Protected, Electronically Protected
Bearing System	Dual Ball Bearings
Dielectric Strength	500VDC/min, <1mA
Insulation Resistance	≥10MΩ @ 500V DC

Operating Temperature
-20°C ~ +65°C

Storage Temperature
-25°C ~ +75°C

Life Expectancy
60,000 Hours (L10 at 45°C)

Installed Options
Open Collector Tach Output

Available Options
5V TTL Tach Output

Weight: 0.18 lbs.

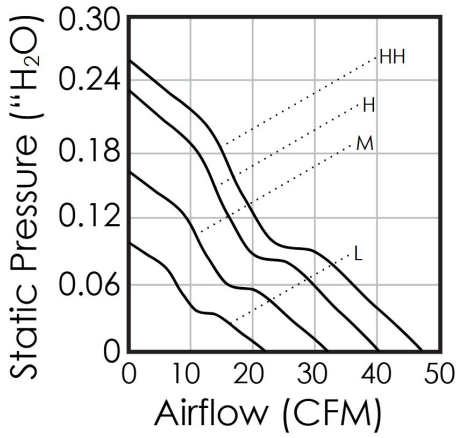

Part Number	Rated Voltage (Volts DC)	Voltage Range (Volts DC)	Input Power (Watts)	Rated Current (Amps)(Max)	Rated Speed (RPM)	Max Airflow (CFM)	Noise Level (dBA)	Max Static Pressure (“H_2O)
OD8025-12HHB01A	12	8 ~ 13.8	2.2	0.18	3800	47.8	35	0.26
OD8025-12HB01A	12	8 ~ 13.8	2.2	0.18	3300	40.1	33	0.23
OD8025-12MB01A	12	8 ~ 13.8	1.8	0.15	2700	31.7	28	0.16
OD8025-12LB01A	12	8 ~ 13.8	1.4	0.12	2000	21.9	21	0.10
OD8025-24HHB01A	24	14 ~ 26.4	4.8	0.20	3800	47.8	35	0.26
OD8025-24HB01A	24	14 ~ 26.4	2.9	0.12	3300	40.1	33	0.23
OD8025-24MB01A	24	14 ~ 26.4	2.4	0.10	2700	31.7	28	0.16
OD8025-24LB01A	24	14 ~ 26.4	2.0	0.08	2000	21.9	21	0.10
OD8025-48HHB01A	48	34 ~ 60.0	3.8	0.08	3800	47.8	35	0.26
OD8025-48HB01A	48	34 ~ 60.0	3.4	0.07	3300	40.1	33	0.23

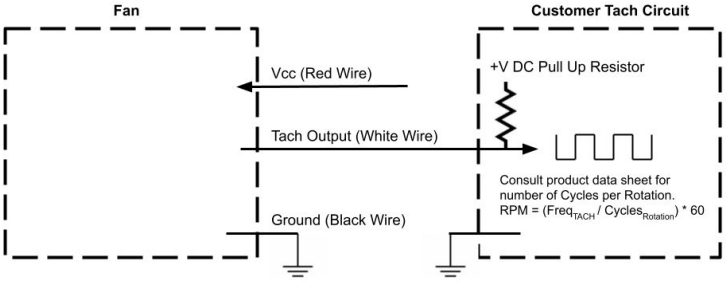

Tach Max Pullup Voltage: Fan Vcc
Tach Max Sink Current: 5mA
Tach Cycles per Rotation: 2

Knight Electronics, Inc.
10557 Metric Drive
Dallas, TX 75243
214-340-0265

Revised 6/13/2025
m0

E170149

RoHS

Orion Fans

Information and data is subject to change without prior notification

OD8025 Series with Alarm

DC Fans - 12, 24, 48V
80mm x 25mm (3.15” x 1.0”)



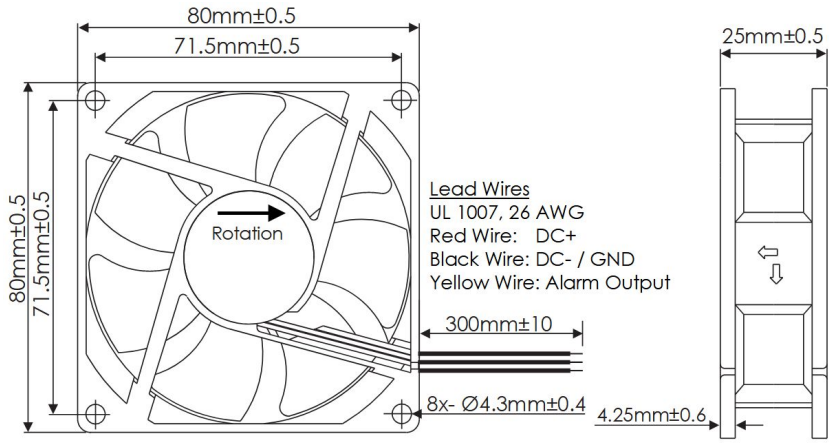

Frame	PBT, UL94 V-0 Plastic
Impeller	PBT, UL94 V-0 Plastic
Connection	3x Lead Wires, 26 AWG
Motor	Brushless DC, Auto Cutoff, Auto Restart, Polarity Protected, Electronically Protected
Bearing System	Dual Ball Bearings
Dielectric Strength	500VDC/min, <1mA
Insulation Resistance	≥10MΩ @ 500V DC

Operating Temperature
-20°C ~ +65°C

Storage Temperature
-25°C ~ +75°C

Life Expectancy
60,000 Hours (L10 at 45°C)

Installed Options
Open Collector Alarm Output

Available Options
5V TTL Alarm Output
Inverted Alarm Logic

Weight: 0.18 lbs.

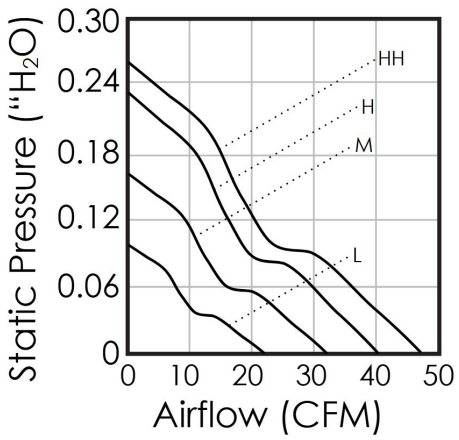

Part Number	Rated Voltage (Volts DC)	Voltage Range (Volts DC)	Input Power (Watts)	Rated Current (Amps)(Max)	Rated Speed (RPM)	Max Airflow (CFM)	Noise Level (dBA)	Max Static Pressure (“H_2O)
OD8025-12HHB02A	12	8 ~ 13.8	2.2	0.18	3800	47.8	35	0.26
OD8025-12HB02A	12	8 ~ 13.8	2.2	0.18	3300	40.1	33	0.23
OD8025-12MB02A	12	8 ~ 13.8	1.8	0.15	2700	31.7	28	0.16
OD8025-12LB02A	12	8 ~ 13.8	1.4	0.12	2000	21.9	21	0.10
OD8025-24HHB02A	24	14 ~ 26.4	4.8	0.20	3800	47.8	35	0.26
OD8025-24HB02A	24	14 ~ 26.4	2.9	0.12	3300	40.1	33	0.23
OD8025-24MB02A	24	14 ~ 26.4	2.4	0.10	2700	31.7	28	0.16
OD8025-24LB02A	24	14 ~ 26.4	2.0	0.08	2000	21.9	21	0.10
OD8025-48HHB02A	48	34 ~ 60.0	3.8	0.08	3800	47.8	35	0.26
OD8025-48HB02A	48	34 ~ 60.0	3.4	0.07	3300	40.1	33	0.23

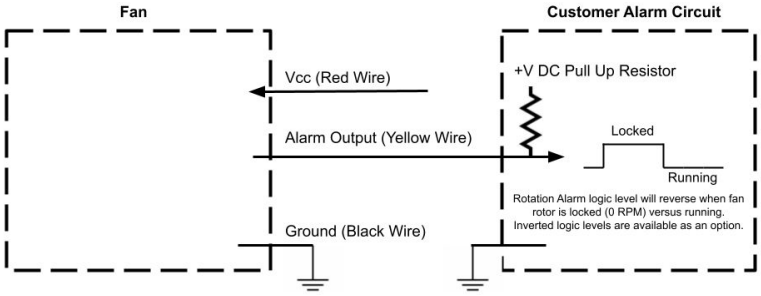

Alarm Max Pullup Voltage: Fan Vcc
Alarm Max Sink Current: 5mA
Alarm Active Logic State: HIGH

Knight Electronics, Inc.
10557 Metric Drive
Dallas, TX 75243
214-340-0265

Revised 6/13/2025
m0

E170149

RoHS

Orion Fans

Information and data is subject to change without prior notification