# *Advance Condor™ XL, Nilfisk ER 1300/1600 (all models)*




## *Service Manual*

**Advance Condor XL, Condor XL AXP™ and Condor XL EcoFlex™ Models:**

- 56110000 LPG/48”
- 56110001 Petrol/48”
- 56110002 Diesel/48”
- 56110003 LPG/60”
- 56110004 Petrol/60”
- 56110005 Diesel/60”
- 56110006 LPG/62”
- 56110007 Petrol/62”
- 56110008 Diesel/62”
- 56110009 LPG/67”
- 56110010 Petrol/67”
- 56110015 Diesel/67
- 56111035 LPG-AXP/48”
- 56111036 Petrol-AXP/48”
- 56111037 Diesel-AXP/48”
- 56111038 LPG-AXP/60”
- 56111039 Petrol-AXP/60”
- 56111040 Diesel-AXP/60”
- 56111041 LPG-AXP/62”
- 56111042 Petrol-AXP/62”
- 56111043 Diesel-AXP/62”
- 56111044 LPG-AXP/67”
- 56111045 Petrol-AXP/67”
- 56111046 Diesel-AXP/67”
- 56381131 LPG X48
- 56381133 Petrol X48
- 56381134 Diesel X48
- 56381135 LPG X60
- 56381137 Petrol X60
- 56381138 Diesel X60
- 56381139 LPG X62
- 56381140 Petrol X62
- 56381141 Diesel X62
- 56381142 LPG X67
- 56381143 Petrol X67
- 56381145 Diesel X67

**Nilfisk ER 1300 and ER 1600 Models:**

- 56111025 LPG/1300
- 56111026 Petrol/1300
- 56111027 Diesel/1300
- 56111028 LPG/1600
- 56111029 Petrol/1600
- 56111030 Diesel/1600

Nilfisk Advance

English

11/11 Revised 11/13 Form No. 56043157

# Contents

**General Information . . . . . 9**
General Machine Description . . . . . 9
Service Manual Purpose and Application . . . . . 9
Revision History . . . . . 9
Other Reference Manuals and Information Sources . . . . . 10
Nilfisk-Advance Publications . . . . . 10
Engine Manufacturers' Technical Manuals. . . . . 11
Diagnostic and Service Tools . . . . . 11
Conventions. . . . . 13
Parts and Service. . . . . 13
Nameplates . . . . . 13
Cautions and Warning Symbols . . . . . 14
General Safety Instructions . . . . . 14
Jacking the Machine . . . . . 16
Transporting the Machine . . . . . 16
Towing or Pushing the Machine . . . . . 17
Technical Specifications . . . . . 18
General Machine Dimensions and Capacities . . . . . 18
Overall Dimensions . . . . . 19
Engine and Machine Performance . . . . . 20
Fastener Torque Specifications . . . . . 20
Maintenance . . . . . 20
Maintenance Schedule. . . . . 20
Recommended Service Materials . . . . . 21
Daily Maintenance. . . . . 21
Maintenance Every 15 to 20 Hours . . . . . 22
Monthly Maintenance . . . . . 22
Maintenance Every 150 Hours . . . . . 22
Maintenance Every 400 Hours . . . . . 23
Maintenance Every 800 to 1000 Hours . . . . . 23
Maintenance Every 2000 Hours. . . . . 23
Lubrication Points . . . . . 24
General Machine Overview . . . . . 27
Major Machine Components. . . . . 27
Control Panel Switches, Old Style Control Panel . . . . . 29
Control Panel Indicators, Old Style Control Panel. . . . . 31
Control Panel Switches, New Style Control Panel . . . . . 33
Control Panel Indicators, New Style Control Panel . . . . . 35
Liquid Crystal Display (LCD) . . . . . 37
General Displays. . . . . 37
Attention and Warning Displays . . . . . 37
Attention Displays. . . . . 37
Warning Displays . . . . . 38

**Chassis System . . . . . 40**
Major Chassis Components . . . . . 40

**Control System . . . . . 42**
Functional Description . . . . . 42
Overview . . . . . 42
Control System Wiring Diagram . . . . . 42
Circuit Description. . . . . 42
Component Locations . . . . . 43
Control Board (Driver Box) Connectors . . . . . 44

J1 Main Control Board Connectors . . . . . 44
J2 Main Control Board Connectors . . . . . 45
J3 Main Control Board Connectors . . . . . 46
Control Board (Driver Box) Programming Options . . . . . 47
Foot Pedal Neutral Position and Deadband Adjustment . . . . . 47
Configuration Display Menu . . . . . 48
User Options Menu . . . . . 50
Configuration Menu . . . . . 54
Operator Presence Control (OPC) . . . . . 57
OPC On . . . . . 57
OPC Off . . . . . 57
Troubleshooting . . . . . 58
Main Control Board Fault Codes . . . . . 58
Systems Disabled by Faults . . . . . 62

**Electrical System . . . . . 64**
Functional Description . . . . . 64
Overview . . . . . 64
Power Supplies . . . . . 64
Circuit Description . . . . . 64
Component Locations . . . . . 65
K1 Power Relay . . . . . 65
Circuit Breakers . . . . . 65
100-amp Fuse F1 . . . . . 66
Troubleshooting . . . . . 66
Specifications . . . . . 68
Component Specifications . . . . . 68
Connector Callout – Relay PCB . . . . . 68
Input/Output Table . . . . . 69
Shop Measurements - Driver Box . . . . . 75
Shop Measurements - Relay PCB . . . . . 82
Wiring Diagram - GM Engine, Drawing #56111804-D . . . . . 83
Wiring Diagram - Kubota Diesel, Drawing #56111804-D . . . . . 84
Wiring Schematic - 1 of 2 . . . . . 85
Wiring Schematic - 2 of 2 . . . . . 86
Engine Harness for Tier II GM 1.6L Gas (Petrol) . . . . . 87
(Prior to 2/25/2011 with serial number below 1000043742) . . . . . 87
Engine Harness for Tier II GM 1.6L LPG . . . . . 88
(Prior to 4/15/2010 with serial number below 1000038143) . . . . . 88
Engine Harness for Tier III GM 1.6L Gas (Petrol) . . . . . 89
(After 2/25/2011 beginning with serial number 1000043742) . . . . . 89
Engine Harness for Tier III GM 1.6L LPG . . . . . 90
(After 2/25/2011 beginning with serial number 1000038143) . . . . . 90

**Engine System, Diesel . . . . . 92**
Functional Description . . . . . 92
Overview . . . . . 92
Diesel Engine Starter Circuit Diagram . . . . . 92
Circuit Description . . . . . 93
Component Locations . . . . . 94
Maintenance and Adjustments . . . . . 95
Engine Oil . . . . . 95
Engine Coolant . . . . . 95
Checking Engine Coolant . . . . . 95
Replacing Engine Coolant . . . . . 96
Engine Air Filter Maintenance . . . . . 97
Troubleshooting . . . . . 97

General Troubleshooting . . . . . 97
Engine Overheating Problems . . . . . 97
Loss of Oil Pressure Protection . . . . . 98
Possible Causes for Start Inhibit to be Active Causing the Engine Not to Crank . . 98
Possible Causes for Run Inhibit to be Active Causing the Engine to Stop Running . 98
Diesel Engine Will Not Run at High Speed or Turbo Speed . . . . . 99
Troubleshooting the Kubota Engine Speed Governing System . . . . . 100
Specifications . . . . . 101
Engine Specifications . . . . . 101
Connector Callout – Relay PCB . . . . . 102
Special Tools . . . . . 102

**Engine System, Gasoline/LPG. . . . . 103**
Functional Description . . . . . 103
Overview . . . . . 103
GM Engine Starter Circuit . . . . . 103
Circuit Description. . . . . 104
GM 1.6L Gasoline Fuel System Description . . . . . 105
Component Locations . . . . . 106
Gasoline (Petrol) . . . . . 106
Gasoline (Petrol) . . . . . 107
Gasoline (Petrol) and LPG. . . . . 107
LPG. . . . . 108
Engine Fuse Box . . . . . 109
Firing Order . . . . . 109
Maintenance and Adjustments . . . . . 110
Engine Oil . . . . . 110
Special Liquid Propane Fuel System Maintenance on the GM 1.6L Engine . . . . 110
Engine Coolant. . . . . 111
Checking Engine Coolant . . . . . 111
Replacing Engine Coolant. . . . . 111
Engine Air Filter Maintenance . . . . . 112
Troubleshooting . . . . . 113
General Troubleshooting . . . . . 113
Over-temperature Protection . . . . . 113
Engine Overheating Problems . . . . . 114
Loss of Oil Pressure Protection . . . . . 114
Possible Causes for Start Inhibit to be Active Causing the Engine Not to Crank . 114
Possible Causes for Run Inhibit to be Active Causing the Engine to Stop Running 114
Engine Diagnostics . . . . . 115
To Access the Engine Diagnostic Information Using the Controller Interface Kit and a PC . . . . . 115
To Access the Engine DTC Error Codes Manually. . . . . 117
1.6L DTC Code to SPN:FMI Code Cross Reference . . . . . 118
Specifications . . . . . 119
Engine Specifications . . . . . 119
Connector Callout – Relay PCB . . . . . 119
Special Tools . . . . . 120

**Hydraulic System . . . . . 121**
Functional Description . . . . . 121
Overview . . . . . 121
Electrical Schematic . . . . . 122
Electrical Circuit Description . . . . . 122
Hydraulic Schematic . . . . . 123
Component Locations . . . . . 124
Major Components . . . . . 124

Hydraulic Cylinders . . . 125
Hydraulic Motors . . . 125
Hydraulic Pumps . . . 126
Hydraulic Valve Block/Manifold . . . 126
Hydraulic Manifold Assembly Component Location Key . . . 129
Maintenance and Adjustments . . . 130
Hydraulic Oil . . . 130
Hydraulic Oil FIlter . . . 130
Troubleshooting . . . 131
General Troubleshooting . . . 131
General Information Regarding Checking Hydraulic Pressures . . . 131
Test Port Nominal Pressure Readings . . . 131
Specifications . . . 133
Special Tools . . . 136

**Options and Accessories . . . 137**

**Recovery System . . . 143**
Functional Description . . . 143
System Overview . . . 143
Recovery System Wiring Diagram . . . 143
Electrical Circuit Description . . . 144
Recovery System Hydraulic Diagram . . . 144
Vacuum Fan Off . . . 144
Vacuum Fan On . . . 145
Component Locations . . . 146
Recovery Tank . . . 146
Daily Maintenance . . . 147
Troubleshooting . . . 147
Removal and Installation . . . 148
Recovery Tank . . . 148
Specifications . . . 150
Special Tools . . . 150

**Scrub System, Cylindrical . . . 151**
Functional Description . . . 151
Overview . . . 151
Cylindrical Scrub System Wiring Diagram . . . 151
Circuit Description . . . 151
Scrub Brush Motors . . . 152
Scrub Lift Cylinder . . . 152
Cylindrical Scrub System Hydraulic Diagrams . . . 153
Scrub Motors Off . . . 153
Scrub Motors On . . . 153
Scrub Lift Cylinder with Engine Shut Off . . . 154
Scrub Lift Cylinder Off with Engine Running . . . 154
Scrub Lift Cylinder On with Engine Running . . . 155
Component Locations . . . 156
Troubleshooting . . . 157
General Troubleshooting . . . 157
Main Scrub Deck and Right Side Scrub Down . . . 159
Main Scrub Deck and Right Side Scrub Pressure . . . 160
Main Scrub and Side Sweep/Scrub On . . . 161
Specifications . . . 162
General Specifications . . . 162
Hydraulic Valve Pressure and Solenoid Coil Current Draw at the Three Scrub Pressures 162
Special Tools . . . 163

**Scrub System, Right Side . . . . . 164**
Functional Description . . . . . 164
Overview . . . . . 164
Right Side Scrub System Wiring Diagram . . . . . 164
Circuit Description . . . . . 164
Right Side Scrub Brush Motor . . . . . 165
Right Side Scrub Lift Cylinder . . . . . 165
Right Side Scrub System Hydraulic Diagrams . . . . . 165
Side Scrub Motor Off . . . . . 165
Side Scrub Motor On . . . . . 166
Side Scrub Lift Cylinder Off (Retracted) . . . . . 166
Side Scrub Lift Cylinder On . . . . . 167
Component Locations . . . . . 167
Maintenance and Adjustments . . . . . 169
Side Brush Tilt Adjustment . . . . . 169
Troubleshooting . . . . . 170
General Troubleshooting . . . . . 170
Main Scrub Deck and Right Side Scrub Down . . . . . 171
Main Scrub and Side Sweep/Scrub On . . . . . 172
Specifications . . . . . 173
Special Tools . . . . . 173

**Solution System . . . . . 174**
Functional Description . . . . . 174
Overview . . . . . 174
Solution Flow Control . . . . . 174
Detergent System . . . . . 175
Extended Scrub System . . . . . 176
Right Side Scrub Brush . . . . . 177
Wash Hose . . . . . 177
DustGuard™ Spray Nozzles . . . . . 178
Solution System Wiring Diagram . . . . . 178
Circuit Descriptions . . . . . 179
Main Solution System . . . . . 179
Detergent System . . . . . 180
Extended Scrub System . . . . . 181
Right Side Scrub . . . . . 182
Wash Hose System . . . . . 183
DustGuard™ System . . . . . 184
Component Locations . . . . . 185
Maintenance and Adjustments . . . . . 187
To Clean the Solution Filter Screen . . . . . 187
To Clean the Extended Scrub System Strainer . . . . . 188
To Clean the Solution Delivery Trough . . . . . 188
To Clean the DustGuard™ Spray Nozzles . . . . . 188
To Adjust the DustGuard™ Spray Nozzles . . . . . 188
Detergent System Maintenance . . . . . 189
To Purge When Changing Detergents (the scrub system must be off) . . . . . 189
To Purge Weekly (the scrub system must be off) . . . . . 190
To Change the Detergent Mix Ratio (the scrub system must be on) . . . . . 191
Troubleshooting . . . . . 192
General Troubleshooting . . . . . 192
Main and Right Side Solution Valves and Solution Pump . . . . . 195
Specifications . . . . . 196
Component Specifications . . . . . 196
Solution and Detergent Delivery Rates . . . . . 197

**Squeegee System . . . . . 198**
Functional Description . . . . . 198
Overview . . . . . 198
Squeegee System Wiring Diagram . . . . . 198
Circuit Description . . . . . 198
Squeegee System Hydraulic Diagrams . . . . . 199
Squeegee Down . . . . . 199
Squeegee Up . . . . . 199
Squeegee Locked . . . . . 200
Component Locations . . . . . 201
Troubleshooting . . . . . 202
General Troubleshooting . . . . . 202
Vacuum Fan On and Squeegee Down . . . . . 203
Vacuum Fan Off and Squeegee Up . . . . . 204
Specifications . . . . . 205

**Steering System . . . . . 206**
Functional Description . . . . . 206
Overview . . . . . 206
Hydraulic Diagrams . . . . . 207
Steering System in Motion . . . . . 207
Steering System Stationary . . . . . 208
Component Locations . . . . . 208
Steering Unit . . . . . 208
Steer Cylinder . . . . . 209
Troubleshooting . . . . . 210
Removal and Installation . . . . . 210
Specifications . . . . . 210

**Sweep System, Side Broom . . . . . 211**
Functional Description . . . . . 211
Overview . . . . . 211
Side Broom Sweep System Wiring Diagram . . . . . 211
Circuit Description . . . . . 211
Side Broom Motor(s) . . . . . 212
Side Broom Actuator . . . . . 212
Side Broom Sweep System Hydraulic Diagrams . . . . . 212
Side Broom Motor(s) Off . . . . . 212
Side Broom Motor(s) On . . . . . 213
Component Locations . . . . . 214
Single (left-hand) Sweep . . . . . 214
Dual Sweep . . . . . 215
Maintenance and Adjustments . . . . . 216
To Adjust the Side Broom Lift Actuator Motor . . . . . 216
Troubleshooting . . . . . 218
General Troubleshooting . . . . . 218
Main Scrub and Side Sweep/Scrub On . . . . . 219
Specifications . . . . . 220

**Wheel System, Non-traction . . . . . 221**
Functional Description . . . . . 221
Maintenance and Adjustments . . . . . 222
Brake Tension Adjustment . . . . . 222
Troubleshooting . . . . . 223
Specifications . . . . . 223

**Wheel System, Traction . . . . . 224**
Functional Description . . . . . 224

Overview . . . 224
Piston Pump . . . 224
Foot Pedal, Hydroback and Rotary Sensor . . . 224
Traction Drive Motor . . . 225
Electrical Schematic . . . 225
Electrical Circuit Description . . . 226
Hydraulic Diagrams . . . 226
Traction Drive Motor in Neutral . . . 226
Tow Valve Engaged . . . 226
Traction Drive Motor in Forward or Reverse . . . 227
Traction Motor Stalling Out . . . 227
Component Locations . . . 228
Piston Pump, Hydroback and Rotary Sensor . . . 228
Traction Drive Motor . . . 228
Maintenance and Adjustments . . . 229
Foot Pedal/Hydroback Neutral Adjustment . . . 229
Foot Pedal Neutral Deadband Adjustment . . . 230
Troubleshooting . . . 231
Removal and Installation . . . 232
Push/Pull Control Cable Replacement . . . 232
Hydroback Replacement . . . 234
Traction Drive Motor Hose Routing . . . 235
Specifications . . . 236
Component Specifications . . . 236
Wheel Drive System Torque Specifications . . . 237

# General Information

## General Machine Description

The Advance Condor™ XL and Nilfisk ER 1300/1600 machines are industrial automatic rider sweeper/scrubbers with multiple sweep/scrub single pass coverage. All models use dual cylindrical scrub brushes with variable scrub pressure and solution flow rates. Different models are available with front mounted side brooms (single and dual) and right side disc scrub.

## Service Manual Purpose and Application

This Service Manual a technical resource designed to aid service personnel in maintaining and repairing the Condor™ XL and ER 1300/1600 Sweeper/Scrubbers to ensure optimum performance and long service life. Please read it thoroughly before servicing your machine.

### Revision History

- 11/13
  - Updated TOC to fix bookmark navigation in PDF

# *Other Reference Manuals and Information Sources*

## *Nilfisk-Advance Publications*

| Model Name | Model Number | Instructions for Use Form Number | Parts List Form Number |
|---|---|---|---|
| Advance LPG/48” | 56110000 | 56091002 - English and Spanish | 56042484 |
| Advance Petrol/48” | 56110001 | | |
| Advance Diesel/48” | 56110002 | | |
| Advance LPG/60” | 56110003 | | |
| Advance Petrol/60” | 56110004 | | |
| Advance Diesel/60” | 56110005 | | |
| Advance LPG/62” | 56110006 | | |
| Advance Petrol/62” | 56110007 | | |
| Advance Diesel/62” | 56110008 | | |
| Advance LPG/67” | 56110009 | | |
| Advance Petrol/67” | 56110010 | | |
| Advance Diesel/67” | 56110015 | | |
| Advance LPG X48 | 56381131 | | |
| Advance Petrol X48 | 56381133 | | |
| Advance Diesel X48 | 56381134 | | |
| Advance LPG X60 | 56381135 | | |
| Advance Petrol X60 | 56381137 | | |
| Advance Diesel X60 | 56381138 | | |
| Advance LPG X62 | 56381139 | | |
| Advance Petrol X62 | 56381140 | | |
| Advance Diesel X62 | 56381141 | | |
| Advance LPG X67 | 56381142 | 56091002 - English and Spanish | 56042484 |
| Advance Petrol X67 | 56381143 | | |
| Advance Diesel X67 | 56381145 | | |
| | | | |
| Nilfisk LPG/1300 | 56111025 | 56091008 - English and Türkçe | 56042494 |
| Nilfisk Petrol/1300 | 56111026 | | |
| Nilfisk Diesel/1300 | 56111027 | | |
| Nilfisk LPG/1600 | 56111028 | | |
| Nilfisk Petrol/1600 | 56111029 | | |
| Nilfisk Diesel/1600 | 56111030 | | |

These manuals can be found on the following Nilfisk-Advance’s electronic supported databases:

- Nilfisk-Advance Dealer Customer Zone
- Advance website: www.advance-us.com
- Nilfisk website: www.nilfisk.com
- EzParts service/parts CD-ROM

### *Engine Manufacturers' Technical Manuals*

| Manual Name | Publication Number |
|---|---|
| PSI Tier 2 1.6L PFI Certified Engine Service Manual G/LP | PSI1P6LPFI-A |
| Kubota V1505TE Diesel Engine Operator Manual (English, French, German, Italian, Spanish) | 16622-8916-3 |
| Kubota V1505TE Diesel Engine Service Manual (English, French, German) | 97897-01640 |
| Kubota V1505TE Diesel Engine Service Manual (English) | 97897-02432 |

## *Diagnostic and Service Tools*

In addition to a full set of metric and standard tools, the following items are required in order to successfully and quickly perform troubleshooting and repair of Nilfisk-Advance Industrial floor cleaning equipment.

- Laptop computer loaded with current version of EzParts, Adobe Reader and (preferably cellular) internet access
- Digital voltmeter (DVM) with DC current clamp
- Hydrometer
- Battery load tester for checking 6V and 12V batteries
- Automotive fuel pressure test gauge (used on gasoline engines)
- Static control wrist strap
- Set of torque wrenches
- Hard (printed) copies of service manuals for regularly serviced machines (available at www.advance-us.com, www.nilfisk.com and other Nilfisk-Advance websites)

These tools are also available from Nilfisk-Advance, Inc.:

- Actuator power cord adapter, p/n 56407502.
- Vacuum water lift gauge, p/n 56205281.

- PSI engine service kit, p/n 56109084, includes an LPG Test Kit, p/n 56504450, and a Diagnostic Communication Cable and software, p/n 56305647



**PSI engine service kit, p/n 56109084**



**PSI LPG test kit, p/n 56504450**



**Diagnostic Communication Cable and software, p/n 56305647**

- PSI diagnostics cable, 4-pin – 8-pin (Generation 1 old style), p/n 56109083

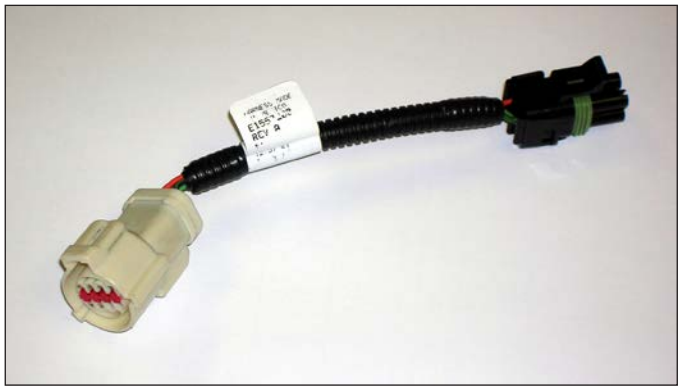

**PSI diagnostics cable, 4-pin – 8-pin (Generation 1 old style), p/n 56109083**

- Hydraulic test gauge w/connector, 3000 psi range, p/n 56504516



**Hydraulic test gauge w/connector 3000 psi range, p/n 56504516**

## Conventions

All references to right, left, front and rear in this manual are as seen from the Operator's seat position.

## Parts and Service

Repairs should be performed by an Authorized Nilfisk-Advance Service Center that employs factory-trained service personnel and maintains an inventory of Nilfisk-Advance original replacement parts and accessories.

Call the Nilfisk-Advance Dealer named below for repair parts or service. Please specify the Model Number (same as the Part Number) and Serial Number when discussing your machine.

(Dealer, affix service sticker here.)

## Nameplates

The Model Number and Serial Number of the machine are shown on the **Nameplate** located on the steering column support, and on a second **Nameplate** beneath the floor plate attached to steering spindle support.

This information is needed when ordering repair parts for the machine.

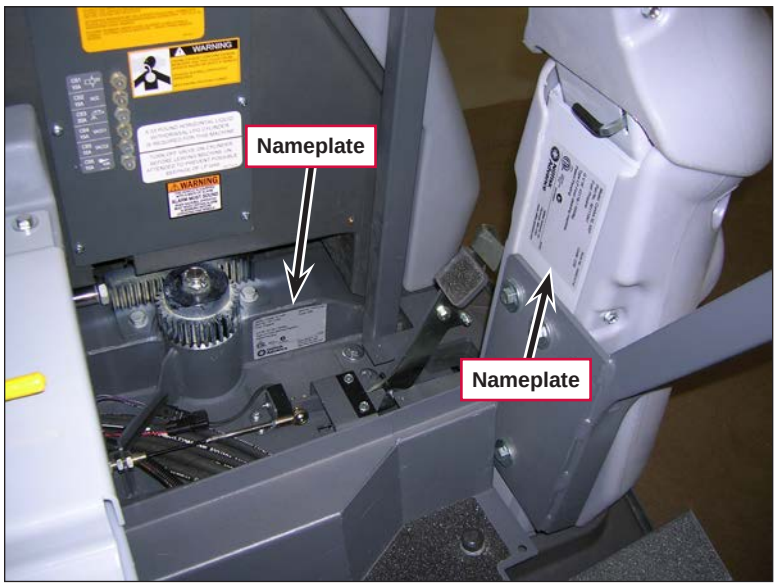

## Cautions and Warning Symbols

Nilfisk-Advance uses the symbols below to signal potentially dangerous conditions. Read this information carefully and take the necessary steps to protect personnel and property.




***Danger! Is used to warn of immediate hazards that will cause severe personal injury or death.***



***Warning! Is used to call attention to a situation that could cause severe personal injury.***



***Caution! Is used to call attention to a situation that could cause minor personal injury or damage to the machine or other property.***



***Read all instructions before using.***

## General Safety Instructions



***Warning! Be sure to follow these safety precautions to avoid situations that could cause severe personal injury.***

- This machine should only be used by properly-trained and authorized persons.
- While on ramps or inclines, avoid sudden stops when loaded. Avoid abrupt sharp turns. Use low speed down hills. Clean only while ascending (driving up) the ramp.
- Keep sparks, flame and smoking materials away from the battery. Explosive gases are vented during normal operation.
- Charging the battery produces highly-explosive hydrogen gas. Charge the battery only in well-ventilated areas away from open flame. Do not smoke while charging the battery.
- Remove all jewelry when working near electrical components.
- Turn the Key Switch off (O) and disconnect the battery before servicing electrical components.
- Never work underneath a machine without safety blocks or stands to support the machine.
- Do not dispense flammable cleaning agents, operate the machine on or near these agents, or operate in areas where flammable liquids exist.
- To avoid hydraulic oil injection or injury, always wear appropriate clothing and eye protection when working with or near any hydraulic system.
- The maximum rated incline for sweeping and scrubbing is 10.5% (6°). The maximum rated incline during transport is 16% (9°).
- Only use the brushes provided with the machine or those specified in the instruction manual. The use of other brushes may impair safety.



***Caution! Do not pressure-wash the operator control panel, electrical components or the engine compartment area.***



***Caution! Be sure to follow these safety precautions to avoid situations that could cause personal injury, damage to property or equipment damage.***

- This machine is not approved for use on public paths or roads.
- This machine is not suitable for picking up hazardous dust.
- Use care when using scarifier discs and grinding stones. Nilfisk-Advance will not be held responsible for any damage to floor surfaces caused by scarifiers or grinding stones.
- When operating this machine, make sure that bystanders, particularly children, are not endangered.
- Before performing any service function, carefully read all instructions pertaining to that function.
- Do not leave the machine unattended without first turning the Key Switch off (O), removing the key and securing the machine.
- Apply the parking brake before exiting the Operator's seat.
- Turn the Key Switch off (O) and remove the key before changing the brushes, and before opening any access panels.
- Take precautions to prevent hair, jewelry or loose clothing from becoming caught in moving parts.
- Use caution when steering and/or operating this machine in below-freezing temperature conditions. Any water in the solution or recovery tanks, or in the hose lines could freeze, causing damage to valves and fittings. Flush with windshield washer fluid.
- The battery must be removed from the machine before the machine is scrapped. Disposal of the battery should be done safely and in accordance with your local environmental regulations.
- Do not use on surfaces having a gradient exceeding that marked on the machine.
- All doors and covers are to be positioned as indicated in the instruction manual before using the machine.

## Jacking the Machine

***Warning!*** ***Never work under a machine without safety stands or blocks to support the machine. When jacking the machine, do so at the designated Tie Down/Jacking Locations shown below.***

## Transporting the Machine

***Caution!*** ***Before transporting the machine on an open truck or trailer, make sure the machine is tied down securely at the designated Tie Down/Jacking Locations shown below, all access doors and covers are secured (tape and strap as needed) and the parking brake is engaged.***

The jacking and tie down locations are identified with a graphic molded into the exterior body panels.

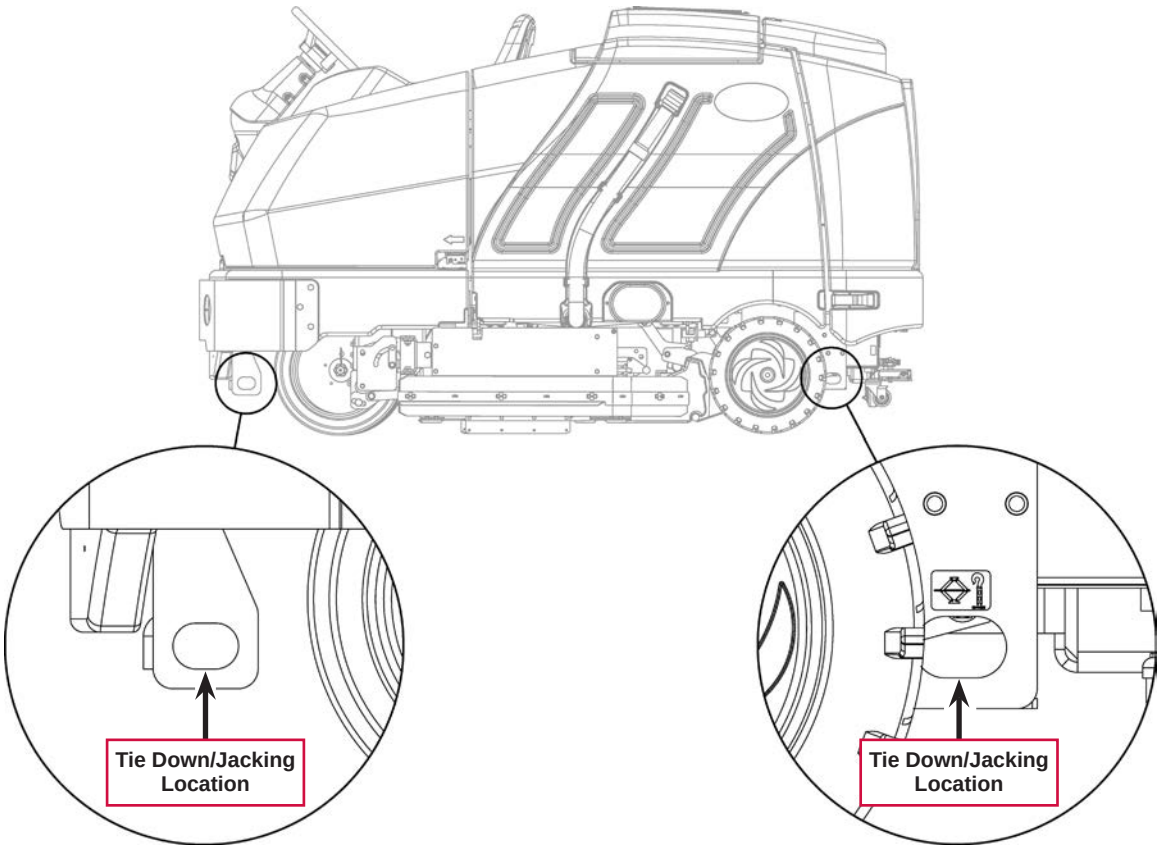

## Towing or Pushing the Machine

***Caution!*** ***The machine's hydrostatic drive propulsion system pump is manufactured with a tow valve. This valve allows the hydraulic traction drive motor to "freewheel" when the machine is being towed/pushed short distances without the use of the engine.***

***The tow valve is controlled by the Tow Valve Lever which is accessed by opening and propping up the Engine Cover. Pull the Tow Valve Lever OUT to engage the fluid bypass and allow the drive motor to freewheel before towing the machine.***

***Note that if the tow valve is left in the freewheeling position (Tow Valve Lever pulled OUT), the hydrostatic pump can't efficiently propel the machine in forward or reverse. Attempting to operate the machine with the Tow Valve Lever pulled OUT can cause overheating of the hydraulic system and/or reduced operating performance.***

***Tow or push the machine no faster than a normal walking pace (2-3 miles per hour/ 3-5 kilometers per hour), and for no farther than 300 feet [100 meters]. Towing or pushing the machine farther than 300 feet [100 meters] can cause machine damage.***

***If the machine is to be moved farther than 300 feet [100 meters], raise the front drive wheel off the floor and place on a suitable transport dolly.***

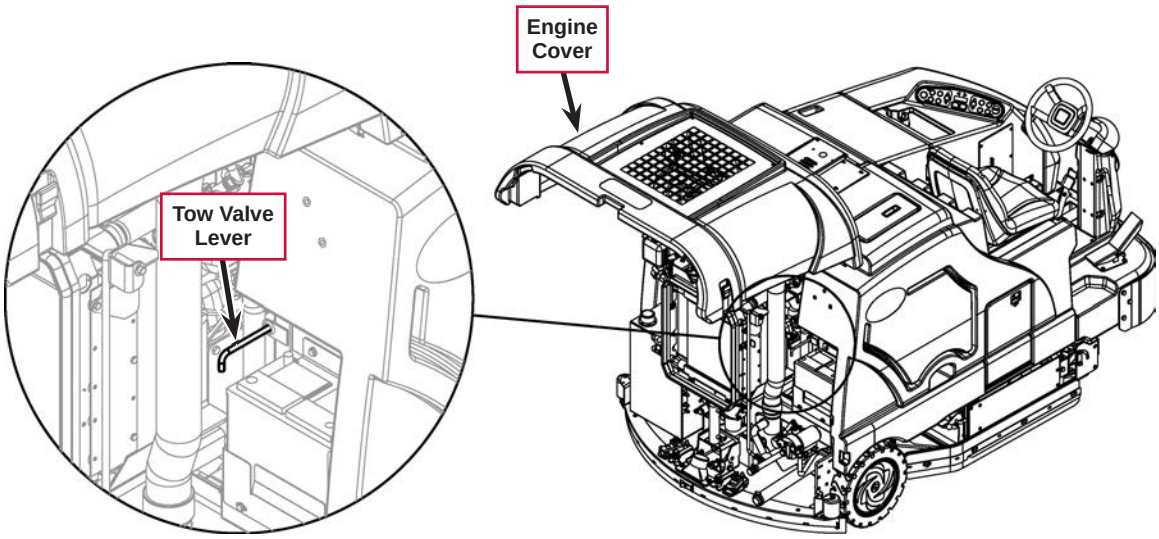

# *Technical Specifications*

## *General Machine Dimensions and Capacities*

| | | | |
|---|---|---|---|
| Length | 100 in [254 cm] | | |
| Height | 58 in [147 cm] | | |
| Height (with overhead guard) | 84 in [213 cm] | | |
| Width/frame (roller to roller) | 56 in [142 cm] | | |
| Width (with rear squeegee) | 57 in [144.7 cm] | | |
| Width (with right side scrub brush) | 66 in [167.6 cm] | | |
| Cleaning path width (main brush only) | 48 in [121.9 cm] deck size all models | | |
| Cleaning path width (with right side scrub brush ) | 60 in [152.4 cm] | | |
| Cleaning path width (dual sweep) | 62 in [157.4 cm] | | |
| Cleaning path width (left sweep/right scrub) | 67 in [170 cm] | | |
| Main brush diameter and length | 11 in x 48 in [27.9 cm x 121.9 cm] | | |
| Side scrub brush (right) | 16 in [40.6 cm] | | |
| Side broom sweep | 20 in [50.8 cm] | | |
| Solution tank capacity (3 inches from top) | 100 gal. [378L] | | |
| Recovery tank (shutoff) | 100 gal. [378L] | | |
| Scrub brush pressure (three settings) | (1) 150 lbs | (2) 250 lbs | (3) 400 lbs |
| Main brush RPM | 400 RPM @2200 engine RPM | | |
| Debris hopper volume capacity | 1.5 $ft^3$ [.04 $m^3$] | | |
| Debris hopper weight capacity | 150 lbs [68 Kg] | | |
| Weight empty | 2975 lbs [1349 Kg] | | |
| Weight GVWR | 4135 lbs [1875 Kg] | | |
| Minimum aisle turn | 119 in [302 cm] | | |
| Transport ground clearance | 3 inches [7.62 cm] when in transport | | |
| Operator sound level @ operator ear | 82.4 dBA @ 2200 RPM | | |
| Vibration level @ steering wheel | does not exceed 0.80 m/s | | |
| Certification | ETL | | |

## *Overall Dimensions*

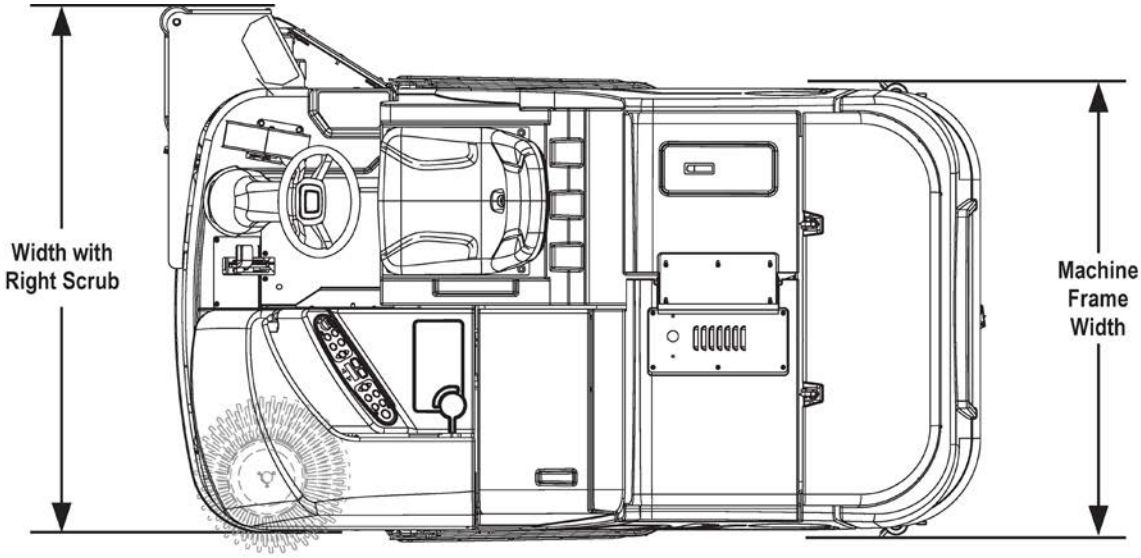


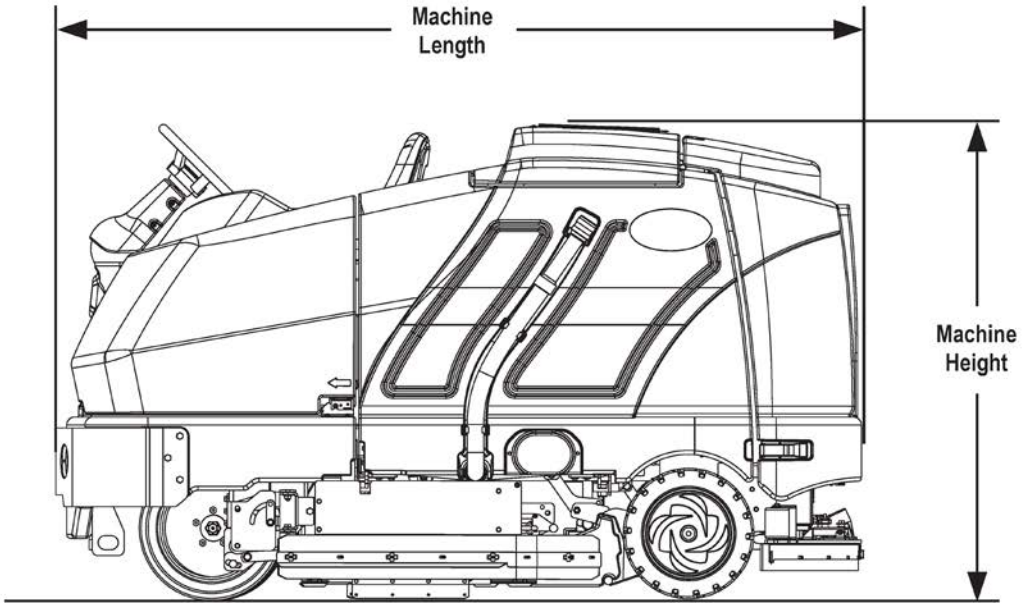

## Engine and Machine Performance

| | | |
|---|---|---|
| Engine speeds | 4-cylinder 1.6L GM (gasoline and LP) | Idle - 1200 RPM |
| | | Normal Run - 2200 RPM |
| | | High Output Turbo - 2400 RPM |
| | 4-cylinder 1505 Kubota Diesel | Idle - 1300 RPM |
| | | Normal Run - 2200 RPM |
| | | High Output Turbo - 2400 RPM |
| Transport speed forward | | 8 mph [12.8 kph] |
| Transport speed reverse | | 3 mph [4.8 kph] |
| Grade ability – Cleaning | | 6° / 10.5% - all models |
| Grade ability – Transporting | | 9° / 16% - all models |

## Fastener Torque Specifications

| | Size | Plated Steel | Stainless Steel |
|---|---|---|---|
| **Standard Torque Specifications (unless otherwise specified)** | #10 | 42 in.-lb. | 28 in.-lb. |
| | 1/4“ | 100 in.-lb. | 67 in.-lb. |
| | 5/16” | 17 ft.-lb. | 11 ft.-lb. |
| | 3/8” | 31 ft.-lb. | 20 ft.-lb. |
| | 1/2” | 75 ft.-lb. | 50 ft.-lb. |
| | 3/4” | 270 ft.-lb. | 180 ft.-lb. |
| | M5 | 61 in.-lb. | 36 in.-lb. |
| | M6 | 9 ft.-lb. | 62 in.-lb. |
| | M8 | 22 ft.-lb. | 13 ft.-lb. |
| | M10 | 44 ft.-lb. | 25 ft.-lb. |
| | M12 | 70 ft.-lb. | 40 ft.-lb. |

# Maintenance

## Maintenance Schedule

Keep the machine in top condition by closely following the maintenance schedule. Maintenance intervals given are for average operating conditions. Machines used in severe environments may require service more often. In general:

- Keep the fuel tank filled (gasoline and diesel). This helps to reduce condensation and moisture entering the fuel system.
- Be aware of the yellow Attention Indicator light, the red Warning Indicator light and the liquid crystal display (LCD) on the Operator panel for icons and fault codes that indicate a critical or non-critical fault condition. Refer to the ***Liquid Crystal Display (LCD)*** section for a listing and explanation of the LCD icons and fault codes.
- Refer to the engine service manual for recommended engine service intervals and procedures.

## Recommended Service Materials

- Engine Oil (refer to your engine manual)
- Hydraulic oil (10W-30)
- Manufacturer-recommended coolant (antifreeze) 50/50 mix
- Lithium-base grease
- Loctite® (or equivalent) thread sealant in the appropriate grades
- Never-Seez® (or equivalent) anti-seize compound

## Daily Maintenance



***Caution!*** ***Do not pressure-wash the operator control panel, electrical components or engine compartment area.***

| Maintenance Item | Procedure |
|---|---|
| Perform “After Use” maintenance steps | “After use” maintenance is normally the responsibility of the machine Operator. Refer to the Instructions for Use. |
| Engine | Check the engine oil level. |
| | Check the engine coolant level in the reservoir. |
| | Check for engine and coolant leaks. |
| | Check the air cleaner service indicator and service the air filter when the indictor is shown red. |
| Operator control panel | Check for a hydraulic filter plugged icon on the operator panel display. |
| Hydraulic system | Check the oil level in the hydraulic oil reservoir (level should be to bottom of screen). |
| | Check for any hydraulic leaks. |
| Recovery tank | Check that the drain hose cap is sealed. |
| | Drain and clean the inside of the tank; flush with clean water. |
| | Check the cover gasket for damage/wear. |
| Squeegee pick-up tool | Clean the squeegee tool; check the blades for damage/wear and deflection. |
| Scrub housing side skirts | Check for damage/wear. |
| Scrub brushes, main and right side | Check for debris wrapped around the brushes/brooms and for damage/wear. |
| Main and side brooms | |
| Wet debris hopper | Clean the hopper, debris screen and hose. |
| Parking brake and foot pedal brake | Check for correct operation of brakes; adjust as needed. |

## *Maintenance Every 15 to 20 Hours*

| Maintenance Item | Procedure |
|---|---|
| Battery | Check the electrolyte level in the battery. |
| | Check the battery cables and connections. |
| Solution tank filter | Inspect and clean the debris filter on the solution filter system. |
| EcoFlex™ and AXP™ detergent systems | Purge the detergent delivery lines. |
| Scrub deck skid plates | Inspect for wear (replace if worn to ¼ inch) |
| Scrub brushes | Rotate and flip the main scrub brushes. |
| DustGuard™ | Clean the dust control system spray nozzles. |

## *Monthly Maintenance*

| Maintenance Item | Procedure |
|---|---|
| Squeegee caster wheel axle and pivot | Pump a small amount of grease into each grease fitting on the machine until grease seeps out around the bearings. |
| Steering Rack | Apply grease to lubricate. |
| Angle adjustment knob threads on the squeegee mount | |
| Squeegee tool end wheels | Apply light machine oil to lubricate. |
| Fuel Tank Cover Latch | |
| EcoFlex™ / AXP™ Cover Latch | |
| Recovery tank latch | |
| Brake Pedal (parking brake) linkage | |

## *Maintenance Every 150 Hours*

| Maintenance Item | Procedure |
|---|---|
| Engine maintenance | Change the engine oil and oil filter. *Also review the engine manufacturer's additional maintenance requirements. |
| Radiator and oil cooler | Inspect and clean the exterior core cooling fins. |
| Steering | Inspect and apply grease to the spur gear and rack. |
| LP fuel system electronic pressure regulator (EPR) – LP engines only | Inspect and drain any oil buildup from the LP fuel system EPR. |

## Maintenance Every 400 Hours

| Maintenance Item | Procedure |
|---|---|
| Air intake housing and hoses | Inspect the complete air intake system for correct routing, kinks, restrictions, sound tight connections, holes and cracks in hoses. |
| Hydraulic hoses | Inspect for leaks, wear, cracking and kinks. |
| Battery | Check electrolyte level; check terminals for corrosion, loose connections. |
| Fuel Filter | Replace fuel filter cartridge (located before injector pump). |
| | Replace the fuel filter at the electronic fuel pump. |

## Maintenance Every 800 to 1000 Hours

| Maintenance Item | Procedure |
|---|---|
| Engine maintenance (Gasoline and LPG only) | Change the spark plugs. |
| Radiator | Flush and refill radiator with 50/50 mix of water and antifreeze. |
| Hydraulic oil reservoir | Change the reservoir oil and filter. |

## Maintenance Every 2000 Hours

| Maintenance Item | Procedure |
|---|---|
| Engine maintenance (LPG and diesel only) | * Review the engine manufacturer's additional maintenance requirements. |



***Note:** The engine maintenance schedule shown lists the recommended engine service intervals. Refer to the **Other Reference Manuals and Information Sources / Engine Manufacturers' Technical Manuals** section for list of available engine manufacturers' service manuals. Refer to these manuals for more complete maintenance and service information and instructions.*

## Lubrication Points

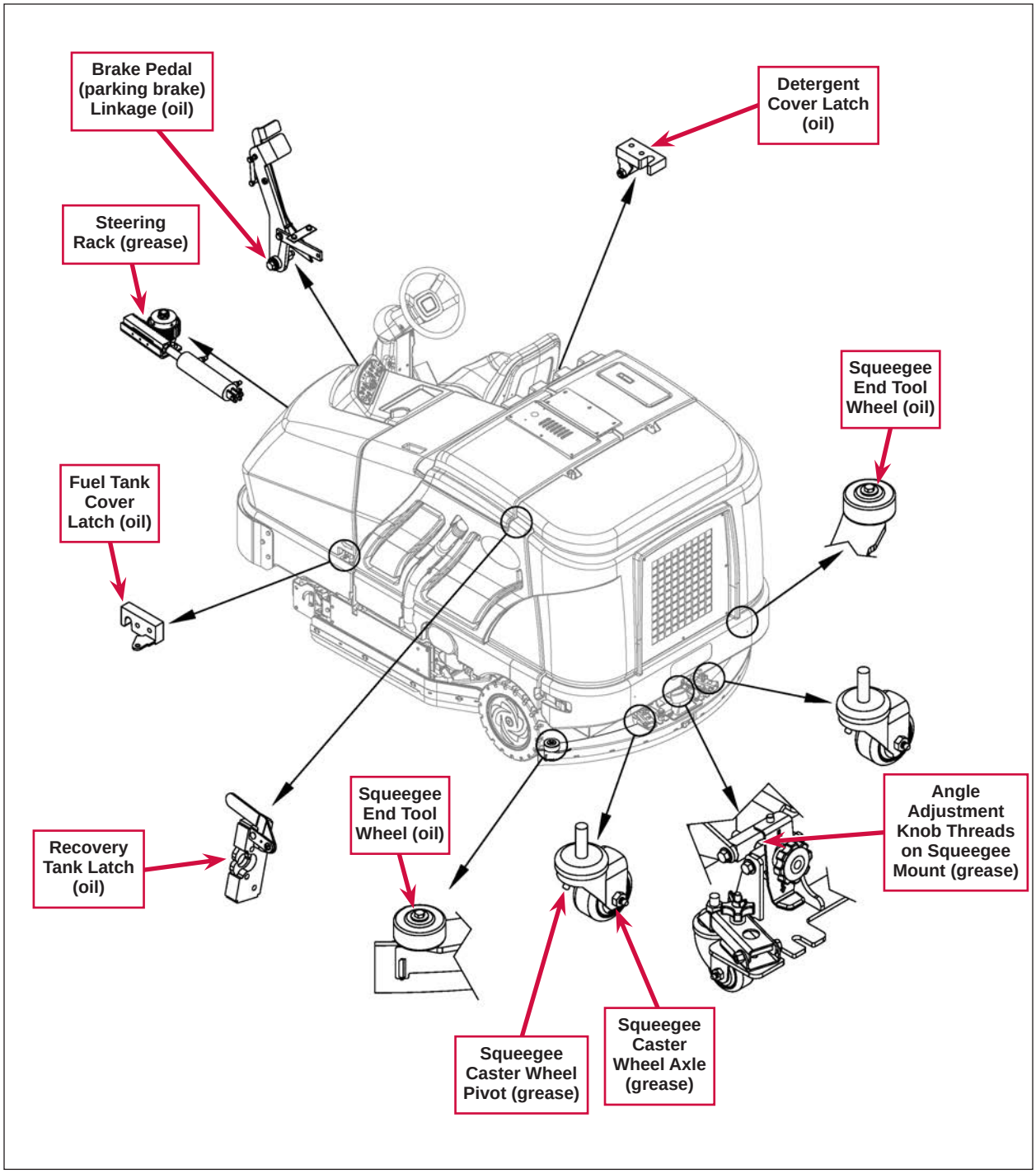

# Advance Condor XL 48/60/62/67 and Nilfisk ER 1300/1600

## PM Checklist

**Customer** _____

**Address** _____

**City** _____ **St** _____ **Zip** _____

**Model** _____ **Serial** _____ **Hours** _____

**Defect Codes**

- **A** needs adjustment
- **B** binding
- **C** dirty or contaminated
- **D** damaged, bent or torn
- **L** leaks
- **M** missing
- **W** worn out

| Ref | OPERATIONAL INSPECTION ITEMS | OK | Defect Codes (circle) | Does Not Work |
|---|---|---|---|---|
| 1 | Check drive pedal sensor operation (to test depress drive pedal and start the engine, it should not start.) | | A B C | |
| 2 | Engine starting with pedal in neutral (if it will not start check pedal calibration programming) | | A | |
| 3 | Engine idle speed, GM/1200 RPM and Kubota/1300 RPM | | A rough | |
| 4 | Normal operational speed (run switch setting) 2200 RPM | | A low power | |
| 5 | Turbo high-speed (hold 2200 RPM switch setting for 2 sec. to enter ) 2400 RPM | | | |
| 6 | Drive pedal linkage (check for Fwd/Rev drive and any neutral creep) | | A B | |
| 7 | Drive system performance (max Fwd 8 mph) | | Noisy sluggish | |
| 8 | Brakes (check both service and parking) | | A B W | |
| 9 | Steering | | excessive play | |
| 10 | Right side scrub brush raise/lower (model option if equipped) | | B D L | |
| 11 | Right side scrub brush on/off (must have main scrub turned on) | | B L | |
| 12 | Side sweep broom(s) raise/lower (model option if equipped) | | A B | |
| 13 | Side broom(s) on/off | | B L | |
| 14 | Dust guard (sweep dust control) On/Off (model option if equipped) | | A C L | |
| 15 | Scrub system (Raise/Lower and auto scrubbing functions) | | <-----> | |
| 16 | Main scrub brushes On/Off (will drift) | | <-----> | |
| 17 | Scrub Brush (pressure settings 1, 2 and 3) | | A B | |
| 18 | Solution control (On/Off and flow volume min/max) | | C D | |
| 19 | Test and purge the detergent EcoFlex™ / AXP™ system (if so equipped) | | C L W | |
| 20 | Squeegee system (raise/lower and auto lift in reverse) | | <-----> | |
| 21 | Vacuum Performance (Sealed water lift 34" @ 2200 RPM) | | C L | |
| 22 | Headlights, gauges and (optional) accessories rotating beacon, backup alarm | | <-----> | |
| 23 | Tilt steering mechanism and seat adjustment lever | | <-----> | |

| Ref | VISUAL INSPECTION ITEMS | Comments | OK | Defect Codes (circle) | Does Not Work |
|---|---|---|---|---|---|
| 24 | Side sweep broom(s) bristles | min wear 3 inches | | A B D W | |
| 25 | Side broom motor(s) | | | B L | |
| 26 | Scrub brush motor(s) | Right scrub brush | | B L | |
| 27 | Main scrub brushes, check for wear and rotate (1.75” length) | Min wear .875 inches | | D W | |
| 28 | Scrub deck housing and door skirts | | | C D W | |
| 29 | Solution system pumps and solenoid valves | as many as four pumps | | C L W | |
| 30 | Solution tank, delivery hoses and filter | clean filter screen | | C L M | |
| 31 | Vacuum impeller motor and hose | | | C L D | |
| 32 | Recovery tank screen and float | clean screen | | B C | |
| 33 | Recovery tank cover gasket | | | D L W | |
| 34 | Recovery tank drain hose and cap | | | C D L M | |
| 35 | Squeegee pick-up hose | back flush | | C L | |

Copyright 2011 Nilfisk-Advance

| Ref | VISUAL INSPECTION ITEMS (continued) | Comments | OK | Defect Codes (circle) | Does Not Work |
|---|---|---|---|---|---|
| 36 | Squeegee tool and blades | clean and rotate | | C D W | |
| 37 | Squeegee casters, leveler adjustment knob and linkage | grease | | C W | |
| 38 | Hydraulic lift cylinders (squeegee, right side and main scrub deck) | | | B L | |
| 39 | Battery | clean and water | | C | |
| 40 | Engine, oil level, hoses and belts | | | C D L | |
| 41 | Engine air cleaner element (inner and outer) | check service indicator | | C L | |
| 42 | Engine coolant level | fill at reservoir | | C L | |
| 43 | Radiator and oil cooler core blockage | clean | | C D L | |
| 44 | Hydraulic oil reservoir level (10W-30 engine oil only) | to bottom of screen | | C L | |
| 45 | Hydraulic system hoses and fittings | | | L | |
| 46 | Propulsion (drive) pump dump valve (tow valve) | | | B D | |
| 47 | Propulsion drive and accessory pump | | | L | |
| 48 | Propulsion pump hydroback cable and clevis connections | | | A B D | |
| 49 | Propulsion pump hydraulic filter | | | C L | |
| 50 | Gasoline/Diesel fuel tank, filter and lines | | | C L W | |
| 51 | LP tank, hoses and fittings | | | L W | |
| 52 | LP fuel filter | service life 1500 Hrs | | C | |
| 53 | LP fuel regulator, lock-off valve and hoses | | | L | |
| 54 | Diesel glow plug function light | hard starting | | <-----> | |
| 55 | Gasoline and Diesel fuel tank strainer | yearly | | C | |
| 56 | Brake cable and parking brake pedal | | | A B | |
| 57 | Circuit breaker panel | | | D M W | |
| 58 | Front tire (check lug nut torque 100 ft-lbs/135Nm) | | | A | |
| 59 | Front drive wheel motor, steer spindle, rack and cylinder | grease pinion and rack | | D L W | |
| 60 | Front and rear tires | tread wear | | C W | |
| 61 | Scrub housing debris hopper (tray) | clean | | C | |
| 62 | Scrub housing recovery hose and pick-up screen | back flush/clean | | C | |
| 63 | Dust guard spray nozzles and strainers | clean | | C L W | |

**Note: For additional service information see the Service Manual, form number 56042157, and Instructions for Use, form number 56091002 (Condor XL) or 56091008 (ER 1300/1600).**

**Defect Codes**

**A** needs adjustment
**B** binding
**C** dirty or contaminated
**D** damaged, bent or torn
**L** leaks
**M** missing
**W** worn out

WORK COMPLETED BY:

ACKNOWLEDGED BY:

Service Technician Signature _____ Date _____ Customer Signature _____ Date _____

Copyright 2011 Nilfisk-Advance

# General Machine Overview

## Major Machine Components

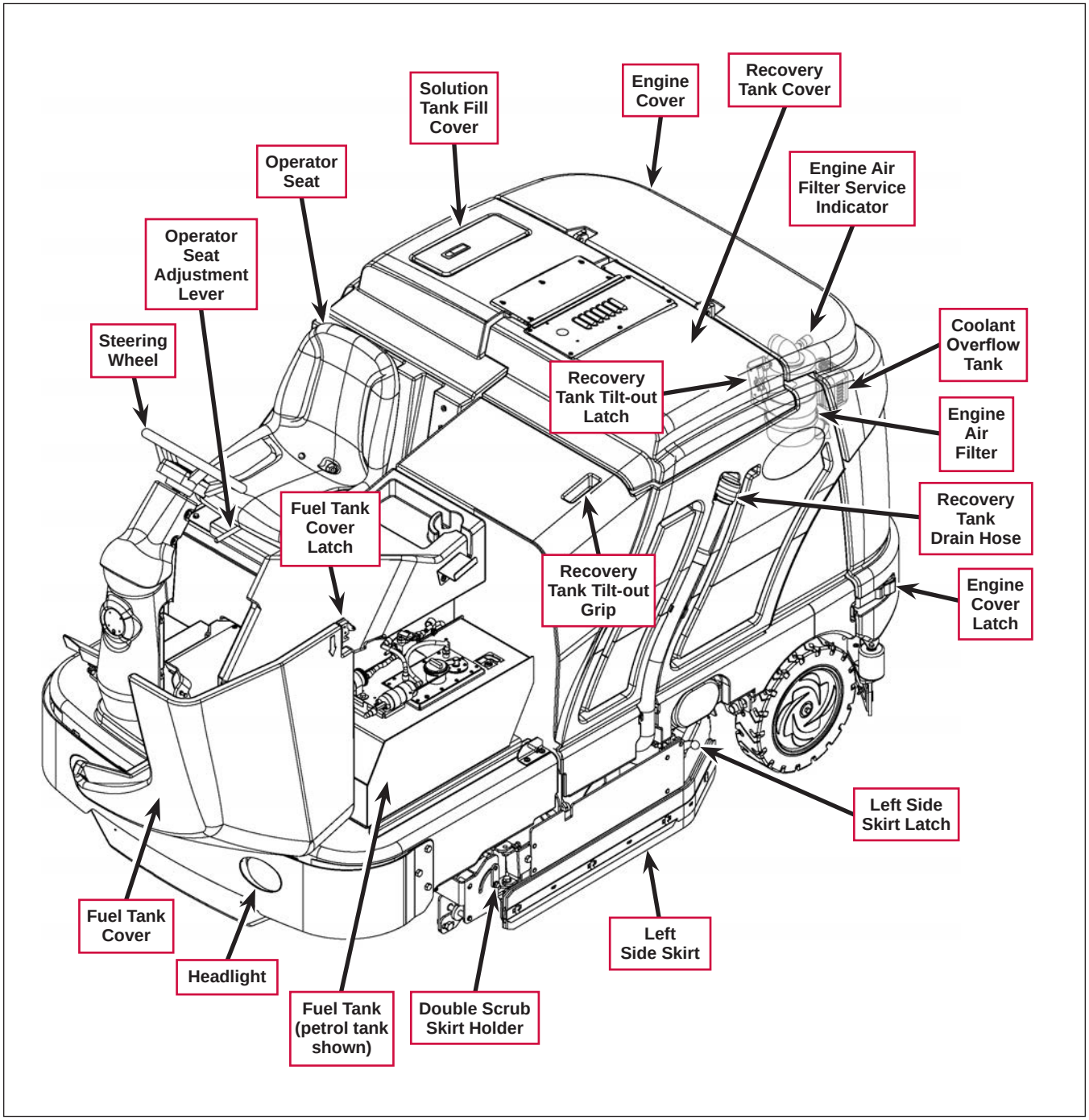

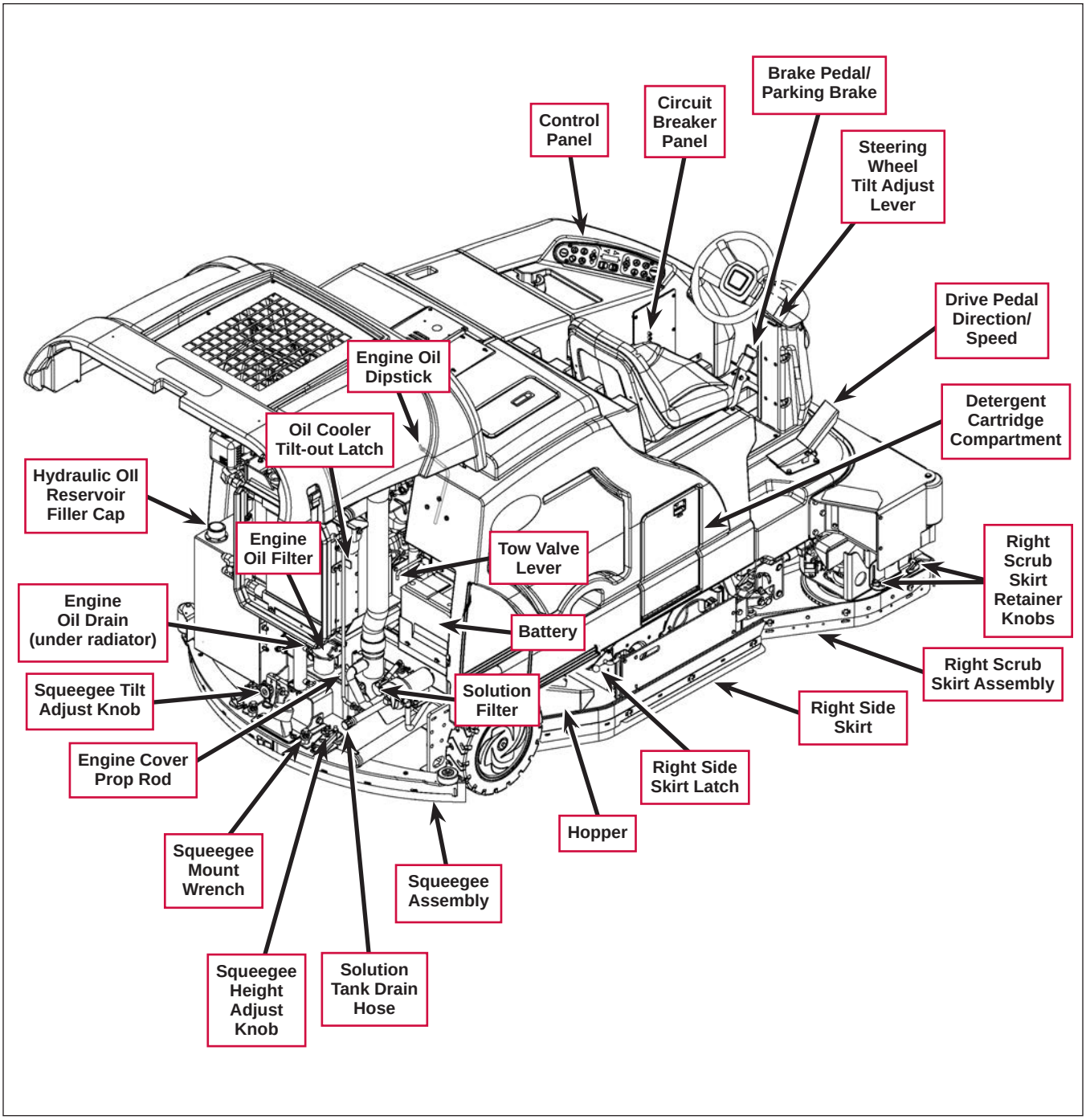
Brake Pedal/ Parking Brake
Control Panel
Circuit Breaker Panel
Steering Wheel Tilt Adjust Lever
Drive Pedal Direction/ Speed
Engine Oil Dipstick
Detergent Cartridge Compartment
Oil Cooler Tilt-out Latch
Hydraulic Oil Reservoir Filler Cap
Engine Oil Filter
Tow Valve Lever
Right Scrub Skirt Retainer Knobs
Engine Oil Drain (under radiator)
Battery
Right Scrub Skirt Assembly
Squeegee Tilt Adjust Knob
Solution Filter
Right Side Skirt
Engine Cover Prop Rod
Right Side Skirt Latch
Hopper
Squeegee Mount Wrench
Squeegee Assembly
Squeegee Height Adjust Knob
Solution Tank Drain Hose

## *Control Panel Switches, Old Style Control Panel*

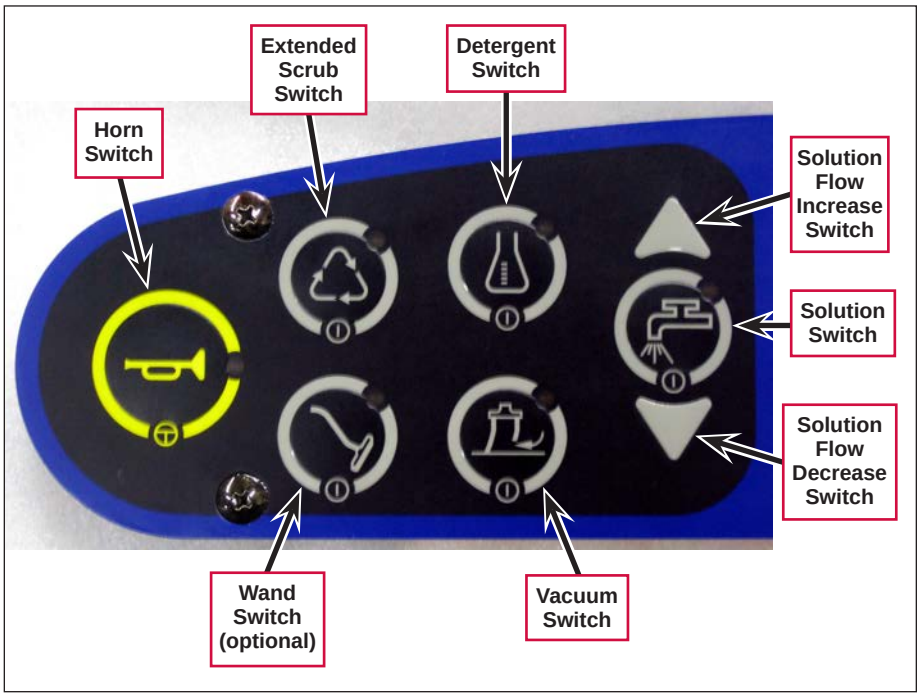


- **Horn Switch** – sounds the horn when pressed.
- **Extended Scrub Switch** – enables the optional extended scrub (recycle) function.
- **Detergent Switch** – enables and disables the detergent system (on models so equipped).
- **Solution Flow Increase Switch** – increases the solution flow rate one level when pressed. Note that the LCD will display the solution flow rate (one to five bars).
- **Solution Switch** – enables and disables the solution system.
- **Solution Flow Decrease Switch** – decreases the solution flow rate one level when pressed.
- **Vacuum Switch** – enables and disables the vacuum system and lowers the squeegee.
- **Wand Switch** – enables and disables the vacuum wand.

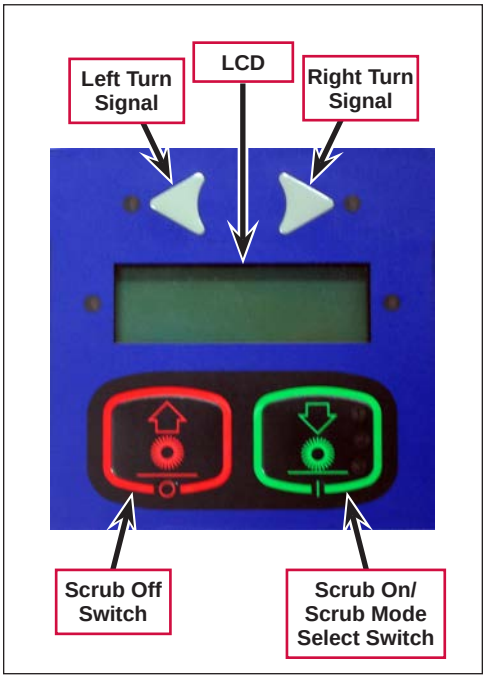


- **Left** and **Right Turn Signal** – (optional) switch on the corresponding turn signal.
- **LCD** (liquid crystal display) – displays the various machine status icons and informational displays.
- **Scrub On/Scrub Mode Select Switch** – enables the scrub, solution and recovery systems, and the side broom/brush system and detergent system (if the machine is so equipped). Note that the scrub brush pressure and solution flow will be at their lowest levels. The scrub brushes will run, the solution will flow and the squeegee vacuum will turn on when the machine begins moving forward.

  Pressing the **Scrub On/Scrub Mode Select Switch** with the scrub system enabled will increase the scrub pressure and corresponding solution flow one step each time the switch is pressed.
- **Scrub Off Switch** – switches off the scrub, solution and recovery systems, and the detergent system (if the machine is so equipped).

- **Side Broom Up Adjust Switch** – raises the side broom(s).
- **Side Broom/Scrub On/ Off Switch** – enables and disables the side broom(s) and/or right side scrub system (on machines so equipped). Note that when the side broom(s)/scrub brush system is enabled, the DustGuard™ spray system will also switch on automatically. Also note that when the side broom(s)/scrub brush system is enabled, the broom(s)/brush will return to their last-used position.
- **Side Broom Down Adjust Switch** – lowers the side broom(s).

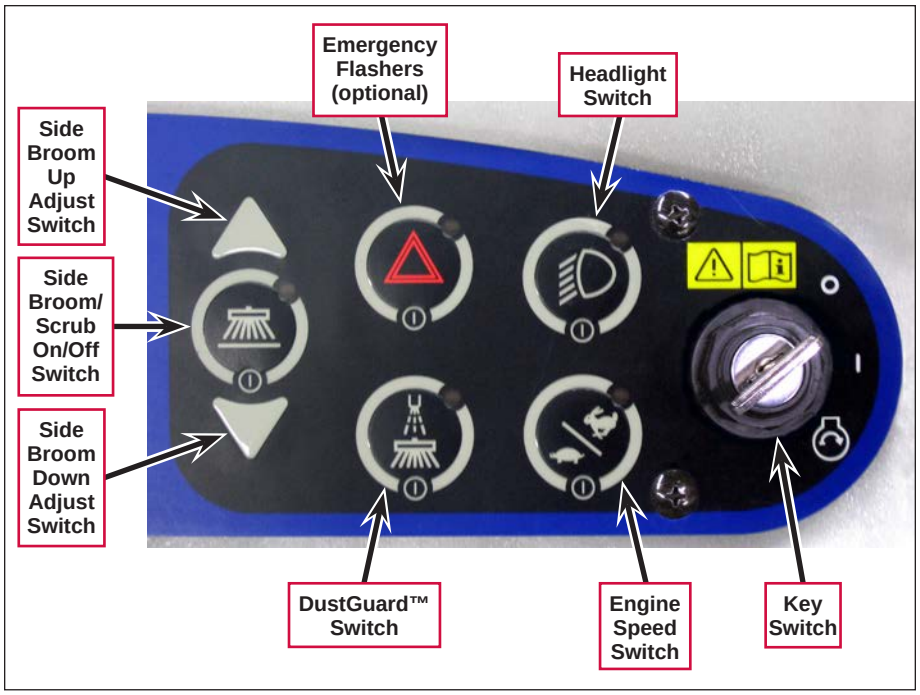


- **Emergency Flashers** – switches on the emergency flashers (if the machine is so equipped).
- **Headlight Switch** – switches on the headlights.
- **DustGuard™ Switch** – enables and disables the DustGuard™ spray nozzles (on models so equipped). Note that if the machine is equipped with an extended scrub system, the DustGuard™ nozzles will shut off when the machine runs out of clean solution.
- **Engine Speed Switch** – selects the engine speed as follows:
  - Pressing the switch with the engine idling (1200 RPM – petrol and LPG, 1300 RPM – diesel) will increase the engine speed to the normal transport/scrub speed (2200 RPM).
  - Pressing the switch with the engine at normal operating speed will return the engine speed to idle.
  - Pressing and holding the switch for two seconds with the engine at normal operating speed will increase the engine speed to the "Turbo" speed (2400 RPM).
  - Pressing the switch with the engine at "Turbo" speed will return the engine to normal operating speed (2200 RPM).

***Note:*** *The Condor XL and the ER 1300/1300 have an automatic idle feature that will reduce the engine speed to idle when the foot pedal has been in the neutral position for 20 seconds or more. The selected engine speed will automatically resume when the foot pedal is moved from neutral. If the* ***Engine Speed Switch*** *is pressed while in idle-override, the automatic idle feature will be temporarily disabled until the next time the foot pedal is moved from the neutral position. This can be useful during troubleshooting, or if you want to run the machine at full speed to warm it up.*

- **Key Switch** – main power/ignition switch.

## *Control Panel Indicators, Old Style Control Panel*

- **Extended Scrub Indicator** – indicates that the optional extended scrub system is enabled.
- **Detergent System Indicator** – indicates that the detergent system is enabled.
- **Solution System Indicator** – indicates that the solution system is enabled.
- **Vacuum System Indicator** – indicates that the recovery vacuum system and squeegee are enabled.
- **Wand Indicator** – indicates that the optional vacuum wand is enabled.

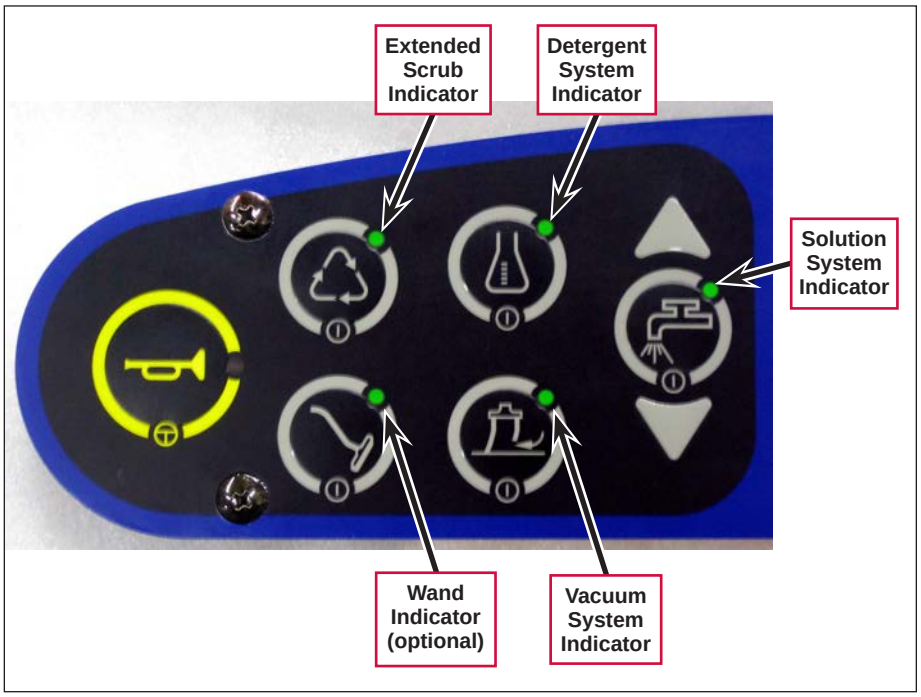


- **Left** and **Right Turn Indicators** – indicate that the corresponding turn signal is flashing.
- **Warning Indicator** – lights in conjunction with the LCD to alert the Operator of a warning or fault condition.
- **Attention Indicator** – lights in conjunction with the LCD to alert the Operator of a machine condition requiring attention.
- **Scrub Pressure Indicators** (**1**, **2** and **3**) – indicate the current scrub pressure.

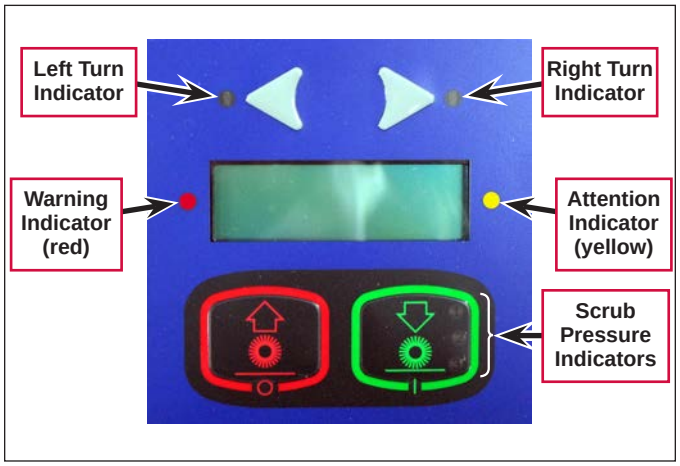

- **Side Broom Brush/Broom Indicator** – indicates that the side broom/brush system is enabled.
- **Emergency Flasher Indicator** – indicates that the emergency flashers are switched on.
- **Headlight Indicator** – indicates that the headlights are switched on.
- **DustGuard™ Indicator** – indicates that the DustGuard™ system is enabled.
- **Engine Speed Indicator** – indicates that the engine is at either normal operating speed or “Turbo” speed. The light will be off when the engine is off or at idle.

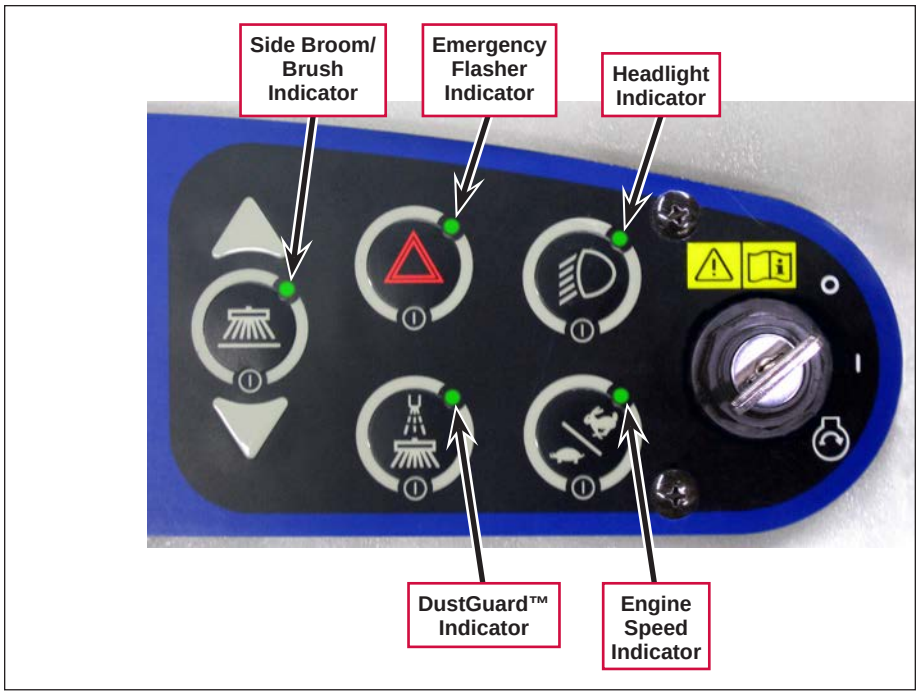

## *Control Panel Switches, New Style Control Panel*

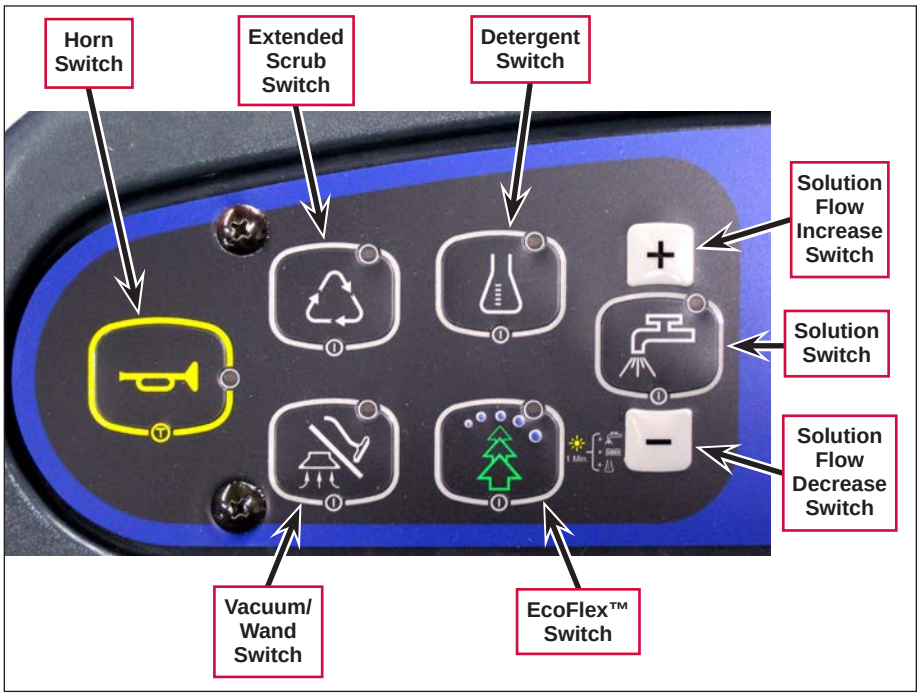


- **Horn Switch** – sounds the horn when pressed.
- **Extended Scrub Switch** – enables the optional extended scrub (recycle) function.
- **Detergent Switch** – enables and disables the detergent system (on models so equipped).
- **Solution Flow Increase Switch** – increases the solution flow rate one level when pressed. Note that the LCD will display the solution flow rate (one to five bars).
- **Solution Switch** – enables and disables the solution system.
- **Solution Flow Decrease Switch** – decreases the solution flow rate one level when pressed.
- **EcoFlex™ Switch** – functions as follows:
  - On Machines Equipped with EcoFlex™:

    The machine will default to the EcoFlex™ cleaning mode (the EcoFlex™ indicator will be on) to conserve solution and detergent. Pressing the **EcoFlex™ Switch** temporarily overrides the EcoFlex™ cleaning settings and does the following:

    - Increases the scrub pressure to the next highest scrub pressure,
    - Increases the solution flow to the next highest flow rate, and,
    - Increases the detergent ratio to the next highest concentration.

    The EcoFlex™ indicator will blink, and the scrub pressure, solution flow and detergent concentration will remain at these higher levels for 60 seconds. After 60 seconds, the scrub pressure, solution flow and detergent concentration will return to their previous settings, and the EcoFlex™ indicator will stop blinking.



***Note:*** *Pressing and holding the **EcoFlex™ Switch** for two seconds enables the full concentration detergent cleaning mode. The only way to re-enable the EcoFlex™ mode is to push the **EcoFlex™ Switch** again. Cycling the key switch does not re-enable the system. The EcoFlex™ system will only function if the scrub system is enabled.*

  - On Machines Not Equipped with EcoFlex™, the **EcoFlex™ Switch** is not functional.
- **Vacuum/Wand Switch** – enables and disables on the vacuum system.

- **Left** and **Right Turn Signal** – (optional) switch on the corresponding turn signal.
- **LCD** (liquid crystal display) – displays the various machine status icons and informational displays.
- **Scrub On/Scrub Mode Select Switch** – enables the scrub, solution and recovery systems, and the side broom/brush system and detergent system (if the machine is so equipped). Note that the scrub brush pressure and solution flow will be at their lowest levels. The scrub brushes will run, the solution will flow and the squeegee vacuum will turn on when the machine begins moving forward.

  Pressing the **Scrub On/Scrub Mode Select Switch** with the scrub system enabled will increase the scrub pressure and corresponding solution flow one step each time the switch is pressed.
- **Scrub Off Switch** – switches off the scrub, solution and recovery systems, and the detergent system (if the machine is so equipped).

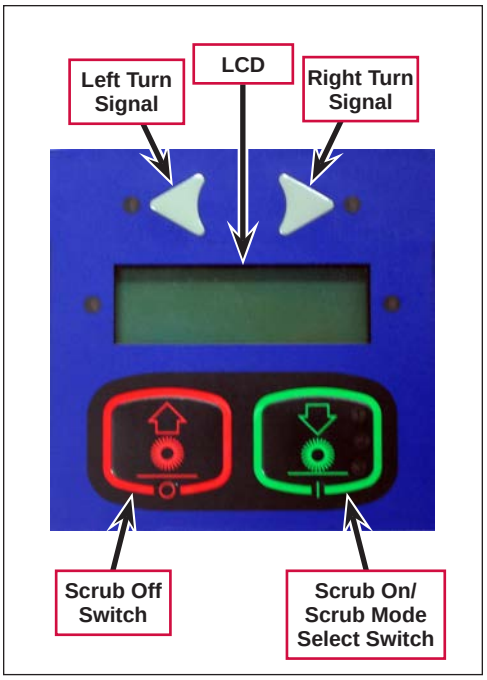


- **Side Broom Up Adjust Switch** – raises the side broom(s).
- **Side Broom/Scrub On/ Off Switch** – enables and disables the side broom(s) and/or right side scrub system. Note that when the side broom(s)/scrub brush system is enabled, the DustGuard™ spray system will also switch on automatically. Also note that when the side broom(s)/scrub brush system is enabled, the broom(s)/brush will return to their last-used position.
- **Side Broom Down Adjust Switch** – lowers the side broom(s).
- **Emergency Flashers** – switches on the emergency flashers (if the machine is so equipped).

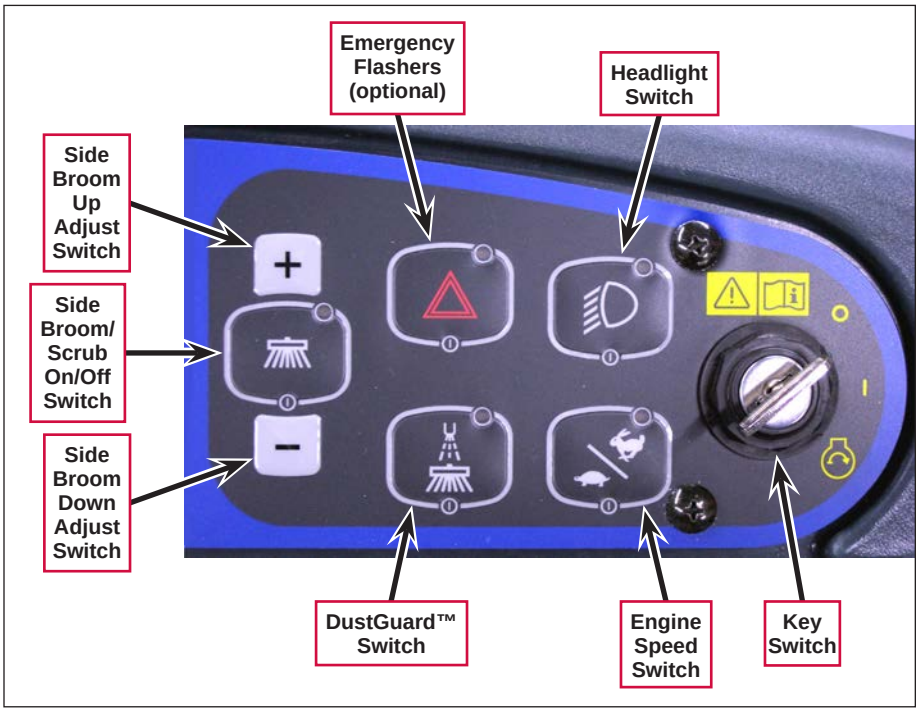


- **Headlight Switch** – switches on the headlights.
- **DustGuard™ Switch** – enables and disables the DustGuard™ spray nozzles. Note that if the machine is equipped with an extended scrub system, the DustGuard™ nozzles will shut off when the machine runs out of clean solution.

- **Engine Speed Switch** – selects the engine speed as follows:
  - Pressing the switch with the engine idling (1200 RPM – petrol and LPG, 1300 RPM – diesel) will increase the engine speed to the normal transport/scrub speed (2200 RPM).
  - Pressing the switch with the engine at normal operating speed will return the engine speed to idle.
  - Pressing and holding the switch for two seconds with the engine at normal operating speed will increase the engine speed to the "Turbo" speed (2400 RPM).
  - Pressing the switch with the engine at "Turbo" speed will return the engine to normal operating speed (2200 RPM).

***Note:*** *The Condor XL and the ER 1300/1300 have an automatic idle feature that will reduce the engine speed to idle when the foot pedal has been in the neutral position for 20 seconds or more. The selected engine speed will automatically resume when the foot pedal is moved from neutral. If the* ***Engine Speed Switch*** *is pressed while in idle-override, the automatic idle feature will be temporarily disabled until the next time the foot pedal is moved from the neutral position. This can be useful during troubleshooting, or if you want to run the machine at full speed to warm it up.*

- **Key Switch** – main power/ignition switch.

## Control Panel Indicators, New Style Control Panel

- **Extended Scrub Indicator** – indicates that the optional extended scrub system is enabled.
- **Detergent System Indicator** – indicates that the detergent system is enabled.
- **Solution System Indicator** – indicates that the solution system is enabled.
- **EcoFlex™ Indicator** – functions as follows:
  - The indicator lights steadily during normal EcoFlex™ operation.
  - The indicator flashes to indicate the 60-second burst of power override that increases of the scrub pressure, solution flow and detergent concentration settings.
  - The indicator switches off when the EcoFlex™ system is off and the machine is in the maximum concentration detergent mode.

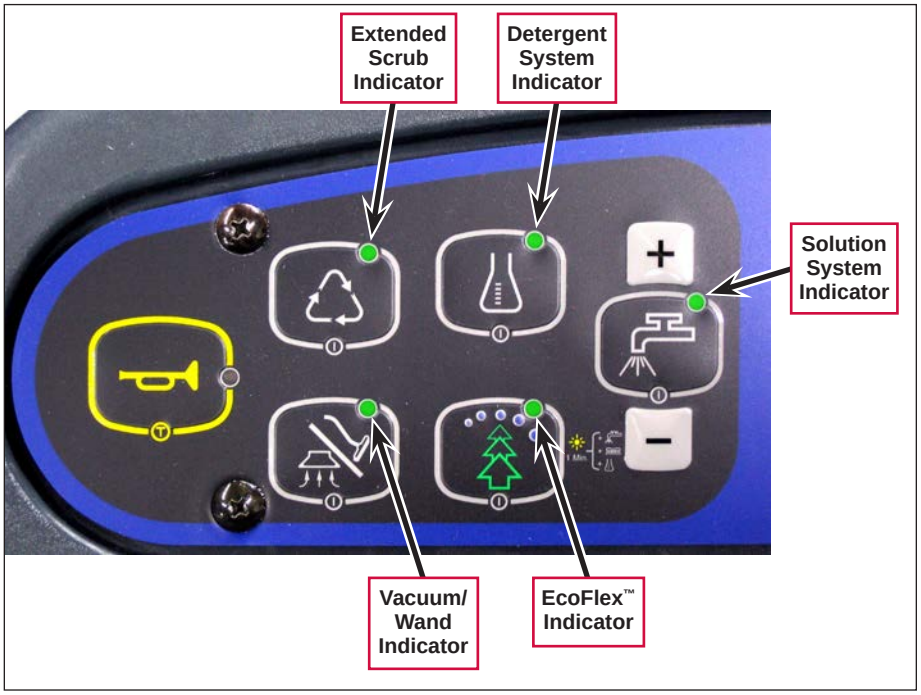


- **Vacuum/Wand Indicator** – indicates that the vacuum system is enabled.

- **Left** and **Right Turn Indicators** – indicate that the corresponding turn signal is flashing.
- **Warning Indicator** – lights in conjunction with the LCD to alert the Operator of a warning or fault condition.
- **Attention Indicator** – lights in conjunction with the LCD to alert the Operator of a machine condition requiring attention.
- **Scrub Pressure Indicators** (**1**, **2** and **3**) – indicate the current scrub pressure.

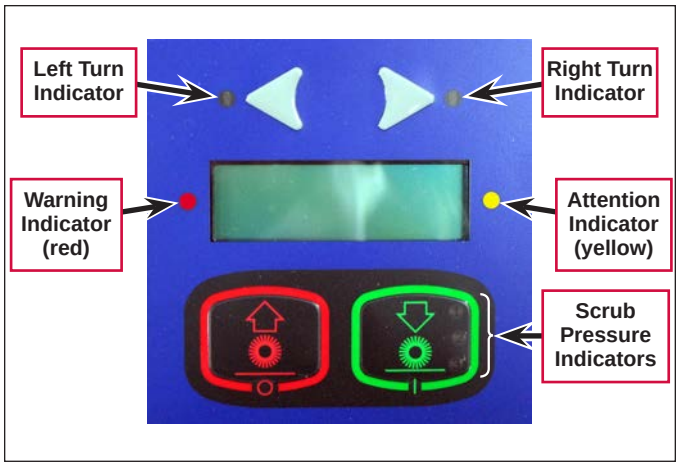


- **Side Broom Brush/Broom Indicator** – indicates that the side broom/brush system is enabled.
- **Emergency Flasher Indicator** – indicates that the emergency flashers are switched on.
- **Headlight Indicator** – indicates that the headlights are switched on.
- **DustGuard™ Indicator** – indicates that the DustGuard™ system is enabled.
- **Engine Speed Indicator** – indicates that the engine is at either normal operating speed or “Turbo” speed. The light will be off when the engine is off or at idle.

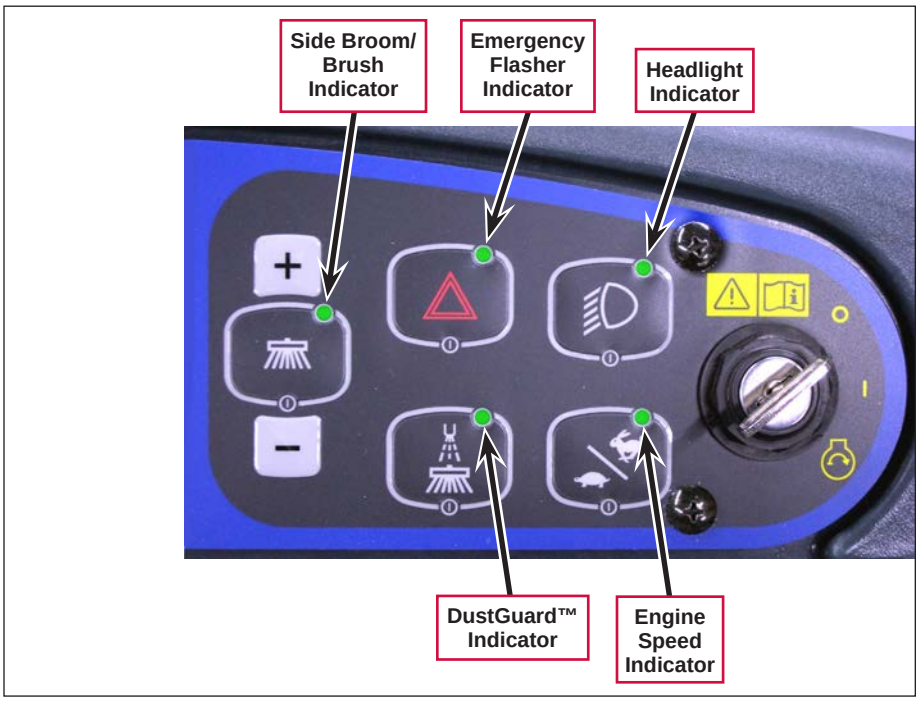

# Liquid Crystal Display (LCD)

## General Displays

The LCD shows the total sweep/scrub time on the hour meter, the fuel gauge, the current scrub pressure and the current solution flow rate.

If the machine is equipped with an EcoFlex™, EDS™ or AXP™ system, the display will also show the detergent system icon and current dilution ratio.

If the machine is equipped with an extended scrub system, the display will show the extended scrub indicator when the system is enabled.

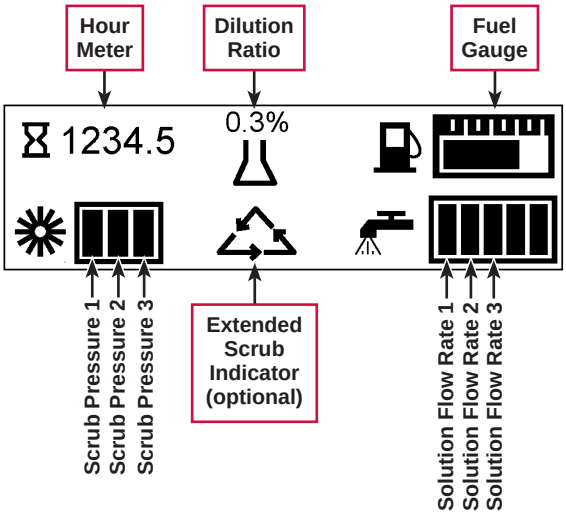


## Attention and Warning Displays

The driver box (main control board) will switch on the yellow attention indicator light or the red warning indicator light and display the appropriate icon to communicate specific monitored operational (modes) activities to the machine operator.

### Attention Displays

Example: The main controller board shows the non-critical controller fault code icon with a two-digit code (08) and wrench symbol. This is a non-critical fault code that indicates the right side scrub solution solenoid valve is over its current limit. The right side scrub system will shut off but the rest of the machine systems will continue to operate.

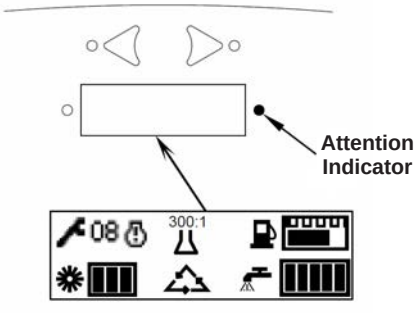


| Icon | Condition | Display Icon |
|---|---|---|
| Solution Level Low | The float switch in the solution tank is indicating that the solution tank is empty. Fill the solution tank to clear the warning indicator and icon. | |
| Hydraulic Filter Plugged | The hydraulic filter needs to be replaced (serviced). Note that the oil temperature must be above 100 degrees F for a plugged filter to activate the icon. (This prevents a false indication with cold oil start-ups.) | |

| Icon | Condition | Display Icon |
|---|---|---|
| Diesel Glow Plug Start | The key switch is in the run position and the glow plugs are activated (heating up) for their timed 10 seconds. The engine can be cranked to start when the yellow attention light and display icon go out. | 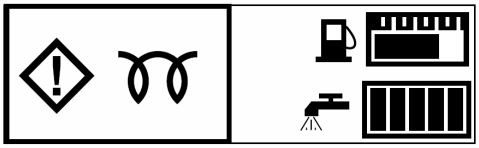 |
| Controller Non-critical Fault | The driver box (main control board) has sensed specific system component failure(s) and displays a two-digit number and the wrench symbol. See the ***Control System/Main Control Board Fault Codes*** for a description of the fault codes and recommended troubleshooting procedures. Note that when non-critical faults exist, hour meter will be displayed in rotation with faults, | 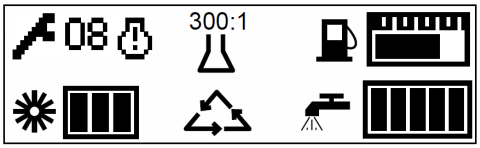 |
| Recovery Tank Full | The tank float has sensed a high water level. The operator needs to empty the waste water from the tank. If tank is empty and the icon is displayed, service (clean) the tank float (it could be stuck). Also check the float circuit wiring for an open. | 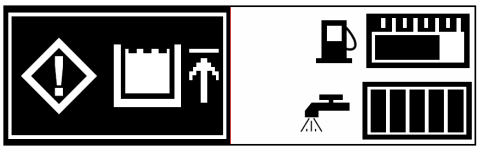 |

### *Warning Displays*

Example: The main controller board shows the engine service icon with a two-digit fault code (38) and wrench symbol. This is a critical engine fault code that indicates the main control board received a run-inhibit signal from the ECM (gasoline and LP) or governor (diesel) that will shut down the engine.

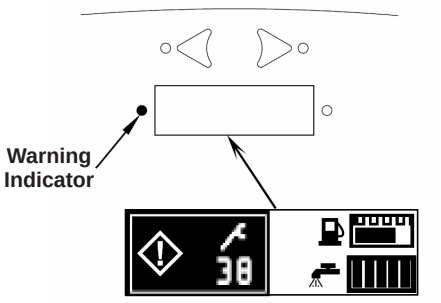


| Icon | Condition | Display Icon |
|---|---|---|
| Parking Brake Engaged | The parking brake is engaged. The icon and warning light will disappear when the Operator releases the brake. |  |
| Diesel Oil Pressure | Low engine oil pressure in the diesel engine is sensed. Check for possible causes for low oil pressure such as engine crankcase level is low, incorrect oil viscosity, fault in oil pressure switch S28, excessive engine wear or defective internal oil pump (relief valve). Note that this icon display is for the Kubota diesel engine only. The GM 1.6L has a low oil pressure monitor that is activated through the engine service display icon. |  |

| Icon | Condition | Display Icon |
|---|---|---|
| Engine Service | The GM 1.6L engines ECM (electronic control module) has activated an engine fault code. See the ***Engine System, Gasoline/LPG / Engine Diagnostics*** section for more detailed diagnostic help. |  |
| Battery Low | Low battery voltage. Check the alternator output; test the battery; clean and tighten the cables. |  |
| Controller Critical Fault | The main control board has sensed a specific system component failure(s) and displays a two-digit number with a wrench icon. See the ***Control System/ Main Control Board Fault Codes*** section for code descriptions and recommended troubleshooting procedures. Note that some critical faults will prevent the operation of certain machine functions. | 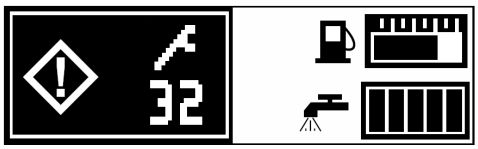 |
| Hydraulic Temperature | The hydraulic oil temperature has exceeded an average operating temperature greater than 220 degrees F. for longer than 15 seconds. Possible causes include low oil level in the reservoir, debris blocking airflow at the oil cooler or hydraulic component overloads. | 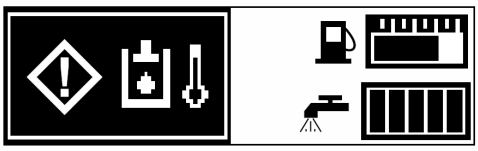 |
| Low Fuel | The fuel sensors read low fuel levels from the liquid fuel tank (gasoline/diesel) or low pressure from the LP storage cylinder. Refill the gasoline/diesel tank (10-gallon capacity). Replace the LP cylinder (33-pound liquid capacity). | 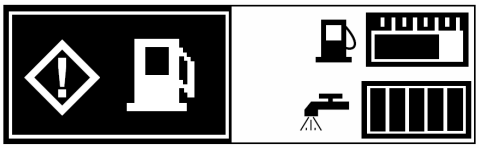 |
| Engine Coolant Temperature | High coolant temperature sensed has caused and engine fault. Check for low coolant level in the radiator, debris blocking airflow through the radiator, fan damage, loose fan belt, leaks, bad engine water pump, engine overload at high ambient temperature. | 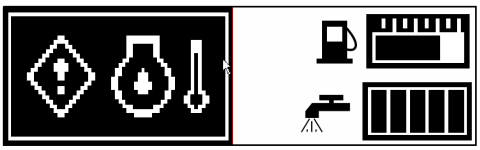 |

# Chassis System

## Major Chassis Components

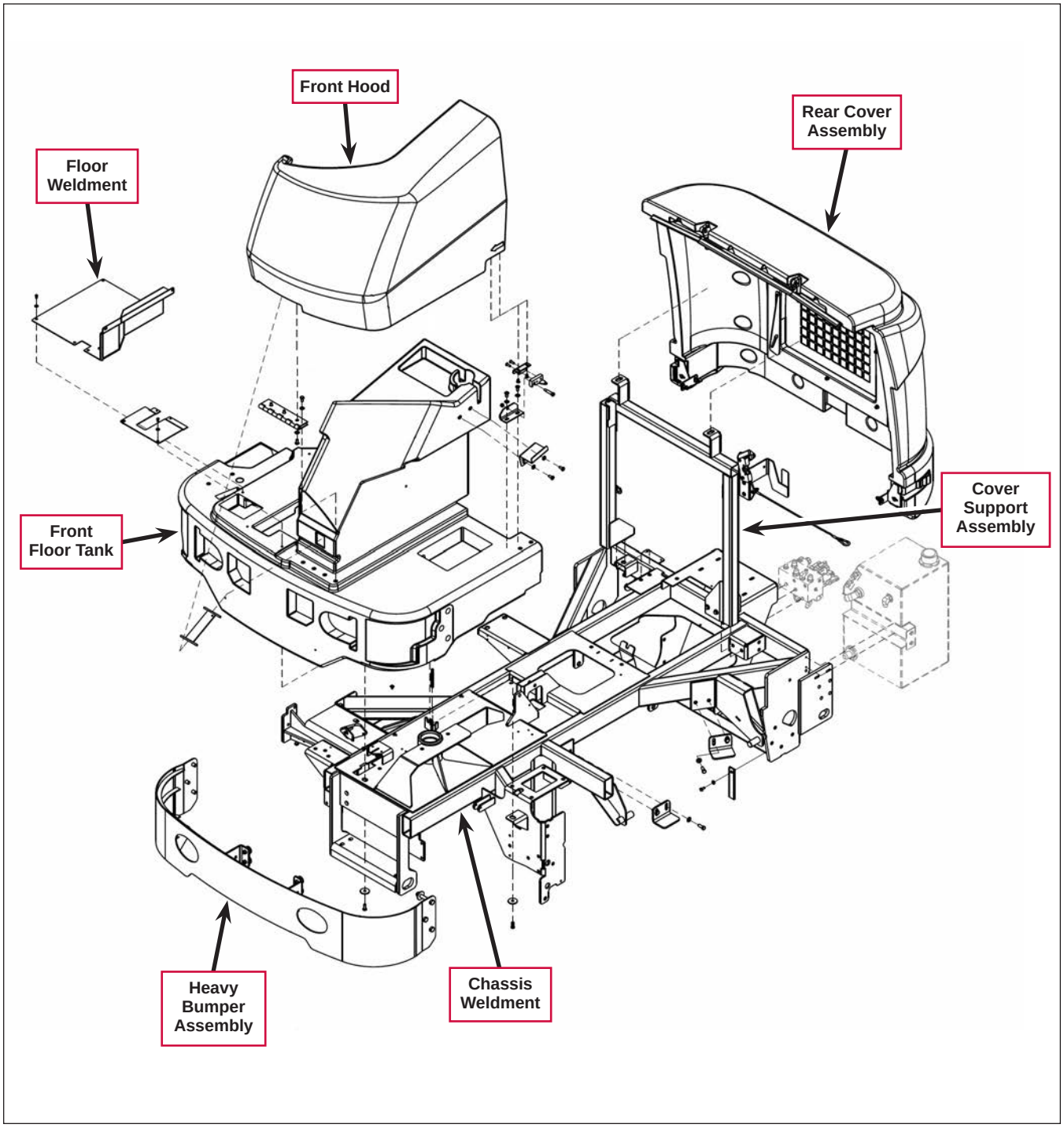

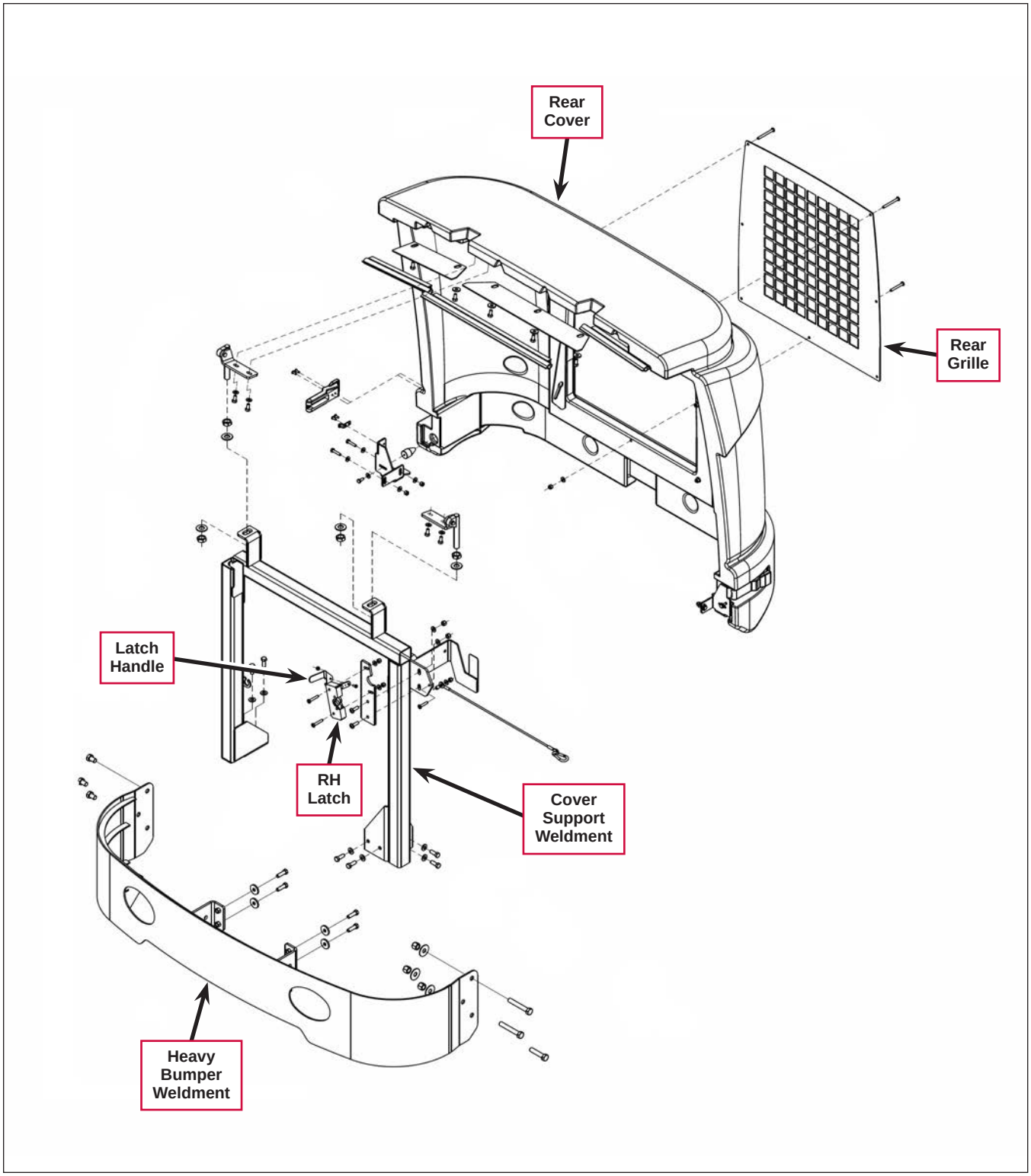
Rear Cover
Rear Grille
Latch Handle
RH Latch
Cover Support Weldment
Heavy Bumper Weldment

# Control System

## Functional Description

### Overview

The Control System includes the Driver Box (main controller) and the Dashboard Panel. The Dashboard Panel communicates with the Driver Box via a CAN Bus. The Driver Box controls the machine electrical and hydraulic systems by actuating the appropriate pumps and solenoid valves to perform the required scrubbing, sweeping and drive functions.

The Driver Box communicates with the Engine System controller on the GM engine, and the APECS 3000 Governor on the Kubota diesel to monitor engine parameters. The Driver Box also communicates with the Relay PCB which provides the engine start and run signals.

### Control System Wiring Diagram

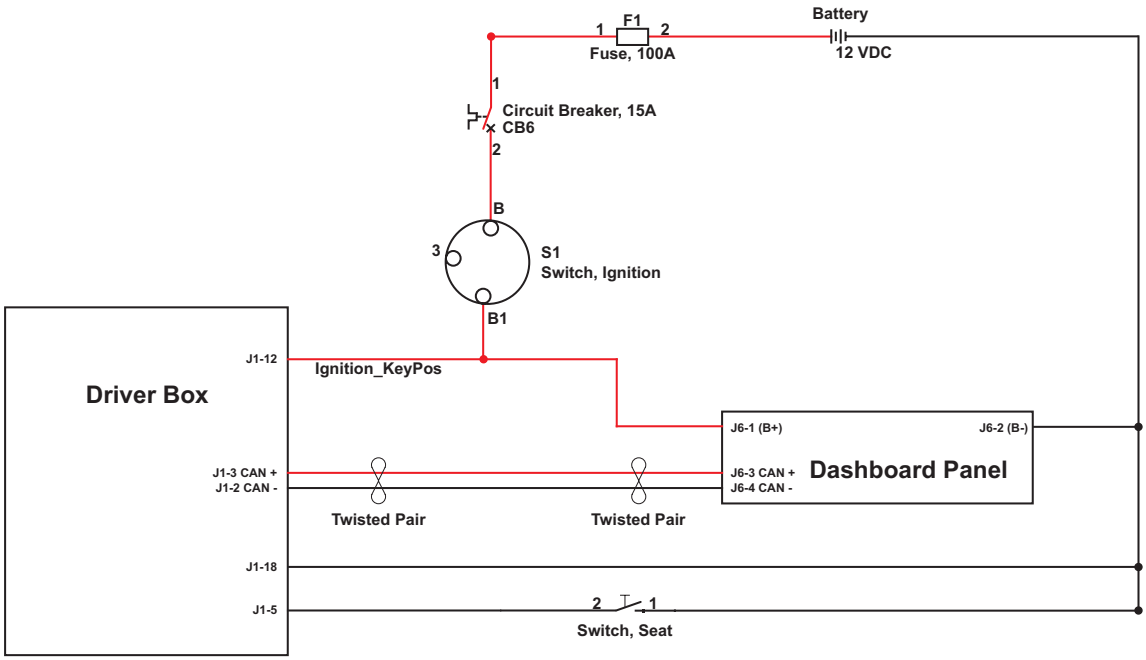


### Circuit Description

The Key Switch must be on to provide power to the **Driver Box** and **Dashboard Panel**. The **Driver Box** and **Dashboard Panel** communicate over the CAN Bus.

## Component Locations

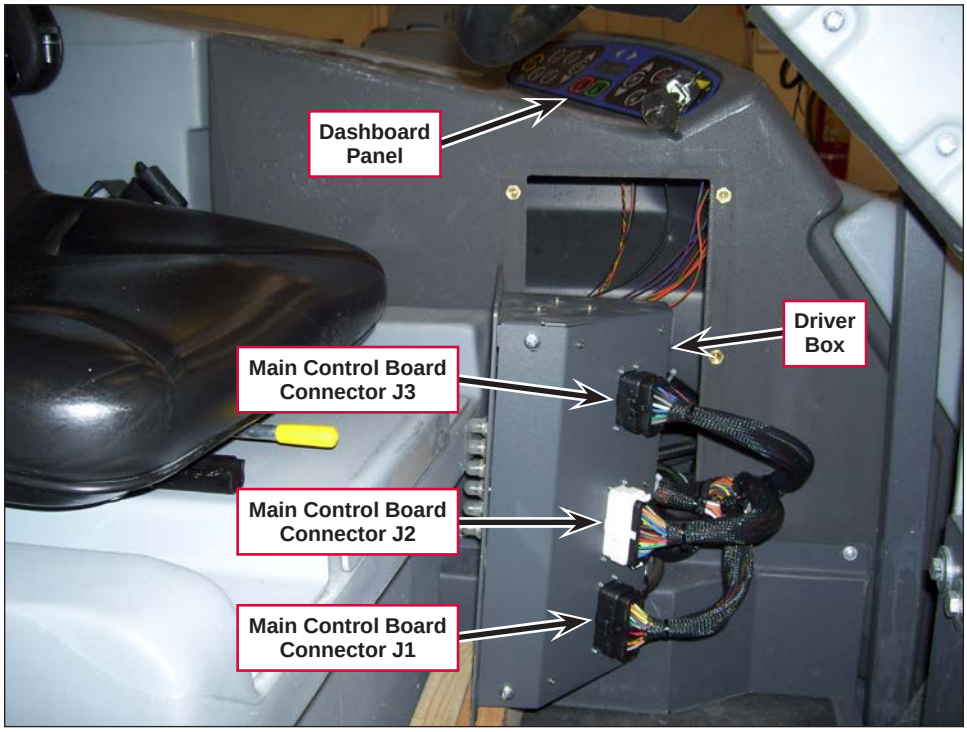


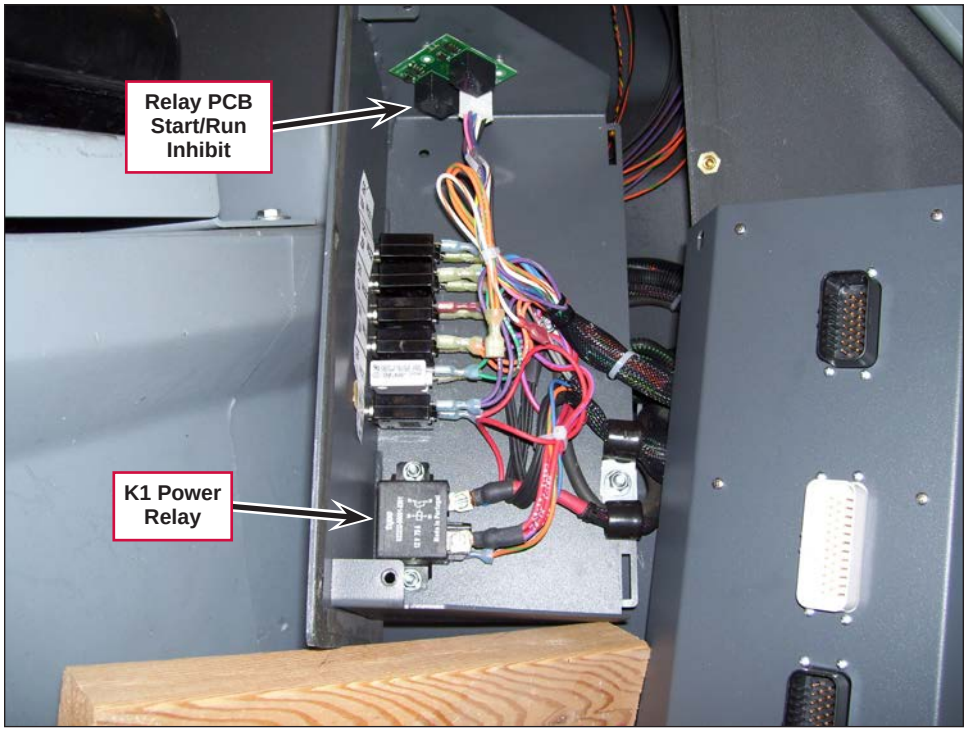

# *Control Board (Driver Box) Connectors*

## *J1 Main Control Board Connectors*

| Pin# | Wire# | Color | Type | Goes To |
|---|---|---|---|---|
| J1-1 | 18-1 | GRA | Input | Engine control module output |
| J1-2 | 20-1 | BLK/YEL | -CANbus | User interface panel (membrane switches) |
| J1-3 | 20-1 | ORN/BLK | +CANbus | User interface panel (membrane switches) |
| J1-4 | | | | Open |
| J1-5 | 18-3 | YEL | Input | Seat Switch (EcoFlex™ only) |
| J1-6 | | | | Open |
| J1-7 | 18-1 | GRA/BLK | Input | Fuel level sensor for either petrol/diesel,/ LP |
| J1-8 | | | | Open |
| J1-9 | | | | Open |
| J1-10 | 18-1 | BRN/WHT | Output | Foot pedal position potentiometer (sensor high) |
| J1-11 | 18-1 | YEL/GRA | Output | Foot pedal position potentiometer (sensor low) |
| J1-12 | 18-1 | ORN/GRN | Input | Key switch ignition switch (run) |
| J1-13 | | | | Open |
| J1-14 | | | | Open |
| J1-15 | | | | Open |
| J1-16 | 18-1 | RED/BLK | Input | S29 Horn switch |
| J1-17 | | | | Open |
| J1-18 | 16-1 | BLK | ground | Chassis ground X-49 |
| J1-19 | 18-1 | GRN/ORN | Input | Sender hydraulic oil temperature |
| J1-20 | 18-1 | VIO/WHT | Input | S6 Brake switch |
| J1-21 | 18-1 | VIO/YEL | Input | S3 Solution empty switch |
| J1-22 | 18-1 | WHT/BRN | Output | Relay PCB (start inhibit pin# J7-3) |
| J1-23 | | | | Open |
| J1-24 | 18-2 | VIO/BRN | Input | Ignition switch start position |
| J1-25 | 18-1 | GRN/YEL | Input | Engine control module (MIL output signal) |
| J1-26 | | | | Open |
| J1-27 | 18-1 | GRA/YEL | Input | S2 Recovery tank full switch |
| J1-28 | | | | Open |
| J1-29 | | | | Open |
| J1-30 | 18-1 | VIO/BLU | Input | Engine control module (engine coolant temperature output) |
| J1-31 | 18-1 | ORN/GRA | Input | Foot pedal position potentiometer (sensor wiper) |
| J1-32 | 18-1 | RED/YEL | Input | S4 Hydraulic filter switch |
| J1-33 | 18-1 | BRN/BLU | Input | S7 Extend scrub level switch |
| J1-34 | 18-1 | YEL/WHT | Output | Relay PCB (ignition inhibit pin #J7-7) |
| J1-35 | | | | Open |

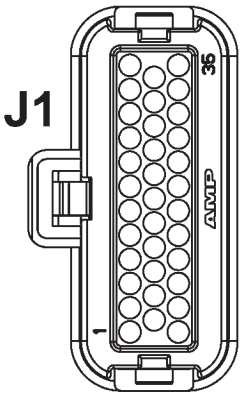

## *J2 Main Control Board Connectors*

| Pin# | Wire# | Color | Type | Goes to |
|---|---|---|---|---|
| J2-1 | 18-1 | BLU/GRN | - Output | K1 power relay coil |
| J2-2 | 18-1 | BLK/WHT | - Output | S8 side sweep scrub solenoid coil |
| J2-3 | 18-1 | GRN/VIO | - Output | S9 side scrub lift solenoid coil |
| J2-4 | 18-1 | YEL/BLU | - Output | S6 scrub cylinder lock solenoid coil |
| J2-5 | 18-1 | RED/GRA | - Output | S2 squeegee down solenoid coil |
| J2-6 | 18-1 | BRN/GRN | - Output | S3 squeegee up solenoid coil |
| J2-7 | 18-1 | ORN/BLU | - Output | S4 scrub brush solenoid coil |
| J2-8 | 18-1 | BRN/YEL | - Output | S1 vacuum fan solenoid coil |
| J2-9 | | | | Open |
| J2-10 | 18-1 | BLU/YEL | - Output | L11 solenoid valve, right solution |
| J2-11 | 18-1 | BLU/BLK | - Output | H3 back-up alarm (optional) |
| J2-12 | 16-1 | ORN | + Input | CB4 circuit breaker 20A |
| J2-13 | 18-1 | WHT/ORN | - Output | K4 glow plug relay coil |
| J2-14 | | | | Open |
| J2-15 | | | | Open |
| J2-16 | | | | Open |
| J2-17 | 16-2 | BLK | - Input | X49 control box ground |
| J2-18 | 16-3 | BLK | - Input | X49 control box ground |
| J2-19 | | | | Open |
| J2-20 | | | | Open |
| J2-21 | | | | Open |
| J2-22 | 18-1 | YEL/GRN | - Output | L10 solenoid valve, main solution |
| J2-23 | 18-3 | GRN/BRN | + Input | CB5 circuit breaker 10A |
| J2-24 | 18-1 | ORN/RED | - Output | S7 scrub pressure proportional solenoid (up) |
| J2-25 | | | | Open |
| J2-26 | 18-1 | WHT/VIO | - Output | S5 scrub pressure proportional solenoid (down) |
| J2-27 | | | | Open |
| J2-28 | | | | Open |
| J2-29 | 18-1 | GRA/ORN | + Output | X2 throttle input (12V 2200 RPM) |
| J2-30 | 18-1 | GRA/BLU | + Output | X2 throttle input (12V 2400 RPM) |
| J2-31 | 18-1 | YEL | + Output | LP6 left front turn lamp |
| J2-32 | 18-1 | GRN | + Output | LP5 right front turn lamp |
| J2-33 | 18-1 | ORN/BRN | + Output | LP4 left rear stop/turn lamp |
| J2-34 | 18-1 | YEL/RED | + Output | LP3 right rear stop/turn lamp |
| J2-35 | 18-2 | GRA/ORN | + Output | M6 extended scrub pump |

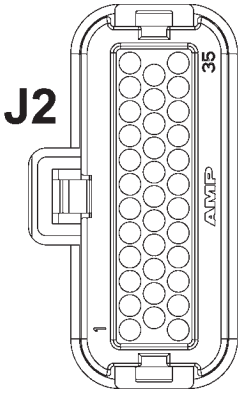

## *J3 Main Control Board Connectors*

| Pin# | Wire# | Color | Type | Goes to |
|---|---|---|---|---|
| J3-1 | 16-2 | GRA/RED | + Input | CB1 Circuit Breaker, 20A |
| J3-2 | 16-1 | GRN/BLU | - Output | M4 solution pump |
| J3-3 | | | | Open |
| J3-4 | 16-1 | BLU/BRN | Output | M7 side broom actuator extend (red wire) |
| J3-5 | 16-1 | WHT/RED | Output | M7 side broom actuator retract (black wire) |
| J3-6 | | | | Open |
| J3-7 | 16-1 | GRA/VIO | | M7 side broom actuator common (white wire) |
| J3-8 | 16-6 | BRN | + Output | LP2  left and right headlights and taillights |
| J3-9 | 16-1 | GRA/RED | + Input | CB1 Circuit Breaker, 20A |
| J3-10 | | | | Open |
| J3-11 | 16-4 | BLK | - Input | X49 control box ground |
| J3-12 | 16-5 | BLK | - Input | X49 control box ground |
| J3-13 | 16-6 | BLK | - Input | X49 control box ground |
| J3-14 | 16-3 | BLU | + Input | CB2 Circuit Breaker, 20A |
| J3-15 | 16-2 | BLU | + Input | CB2 Circuit Breaker, 20A |
| J3-16 | 18-1 | VIO | + Input | CB3 Circuit Breaker, 15A |
| J3-17 | 18-1 | WHT/YEL | + Output | Horn |
| J3-18 | 16-1 | YEL/BLK | - Output | M5 mist pump |
| J3-19 | 18-1 | BLK/RED | - Output | M11 detergent pump 2 (AXP) |
| J3-20 | 18-1 | BLK/YEL | + Output | M11 detergent pump 2 (AXP) |
| J3-21 | 18-1 | RED/BLU | - Output | M10 detergent pump 1 (AXP) |
| J3-22 | 18-1 | RED/WHT | + Output | M10 detergent pump 1 (AXP) |
| J3-23 | 16-1 | BLU/RED | - output | M8 wand pump |

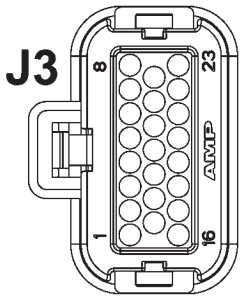

# Control Board (Driver Box) Programming Options

## Foot Pedal Neutral Position and Deadband Adjustment

*Factory Default: 3%* *Range: 2% - 15%*

Whenever you change or repair the drive pedal linkage components or the hydrostatic unit, or if you replace the Rotary Sensor or Control Board (Driver Box), you will have to recalibrate the neutral deadband position and set the sensitivity as follows:

1. Depress the foot pedal to the full reverse position, then allow the pedal to slowly return to its neutral position. Do not move the pedal during the remainder of this procedure.

2. Press and hold the Engine Speed switch, then turn the ignition Key Switch to the run (on) position. Continue to hold the Engine Speed switch until all the display panel lights turn off (approximately three seconds), then release the switch.



   - The first line of the LCD will read **PEDAL CALIBRATION**.
   - The second line of the display will read **Place Pedal in Neutral** with an arrow to the left of the line.
   - The third line of the display will read **Neutral Deadband**.

3. Press the green Scrub On switch.



   - The first line of the LCD will read **Neutral Set**.
   - The second line of the display will show the resistance value, in ohms, that the control board is reading through the rotary sensor. Note that it's normal for this value to drift a little.

4. Press the green Scrub On switch to set the nominal deadband resistance value. The display will return to the previous menu.

5. Press the Side Broom Down (-) switch to move the arrow to the left of the **Neutral Deadband** line.



6. Press the green Scrub On switch to display the **Neutral Deadband** range menu. The percentages shown are the limits the resistance from the rotary sensor can vary from the **Neutral Set** (nominal) resistance and still be in the deadband range and allow the engine to start.

7. Press the Side Broom Up (+) and Down (-) switches to scroll through the available percentages.

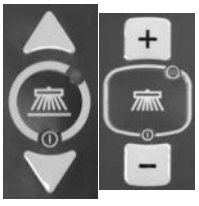

***Note:*** *The ideal neutral deadband percentage range is one that allows reliable starting, yet still actuates the scrub functions with minimal pedal travel. The factory default value is 3%.*

8. When the arrow is to the left of the desired percentage value:

   - Press the green Scrub On switch to save the new percentage value. The display will return to the previous menu.



- Press the red Scrub Off switch to return to the previous menu without changing the percentage value.



9. Turn the Key Switch to the off position. The new settings will be saved and remain in effect until they are changed again.

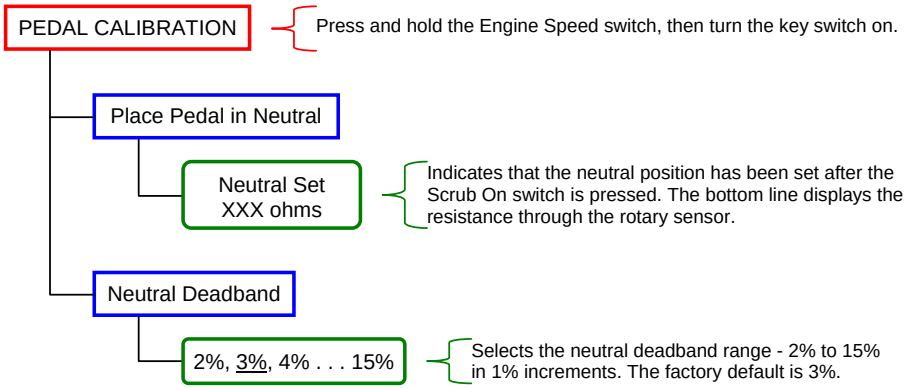


## Configuration Display Menu

***Note:*** *The Configuration Display will only display the active configured settings and fault codes. You cannot make any changes to the machine configuration from the Configuration Display Menu other than clearing the fault codes. See the* ***Configuration Menu*** *section for instructions on how to change the machine configuration.*

1. Press and hold the Emergency Flashers switch.



2. Turn the Key Switch to the run (on) position. Continue to hold the Emergency Flashers switch until all the display panel lights turn off (approximately three seconds), then release the switch.

   The first line of the LCD will read **CONFIGURATION DISPLAY**.

3. Press the Side Broom Up (**+**) and Down (**-**) switches to scroll through the displayed menu items as shown on the following pages.



4. When the arrow is pointing to a menu item:

   - Press the green Scrub On switch to display the next level of menu items.



   - Press the red Scrub Off switch to return to the previous menu level.



5. Turn the Key Switch to the off position to exit the Configuration Display.

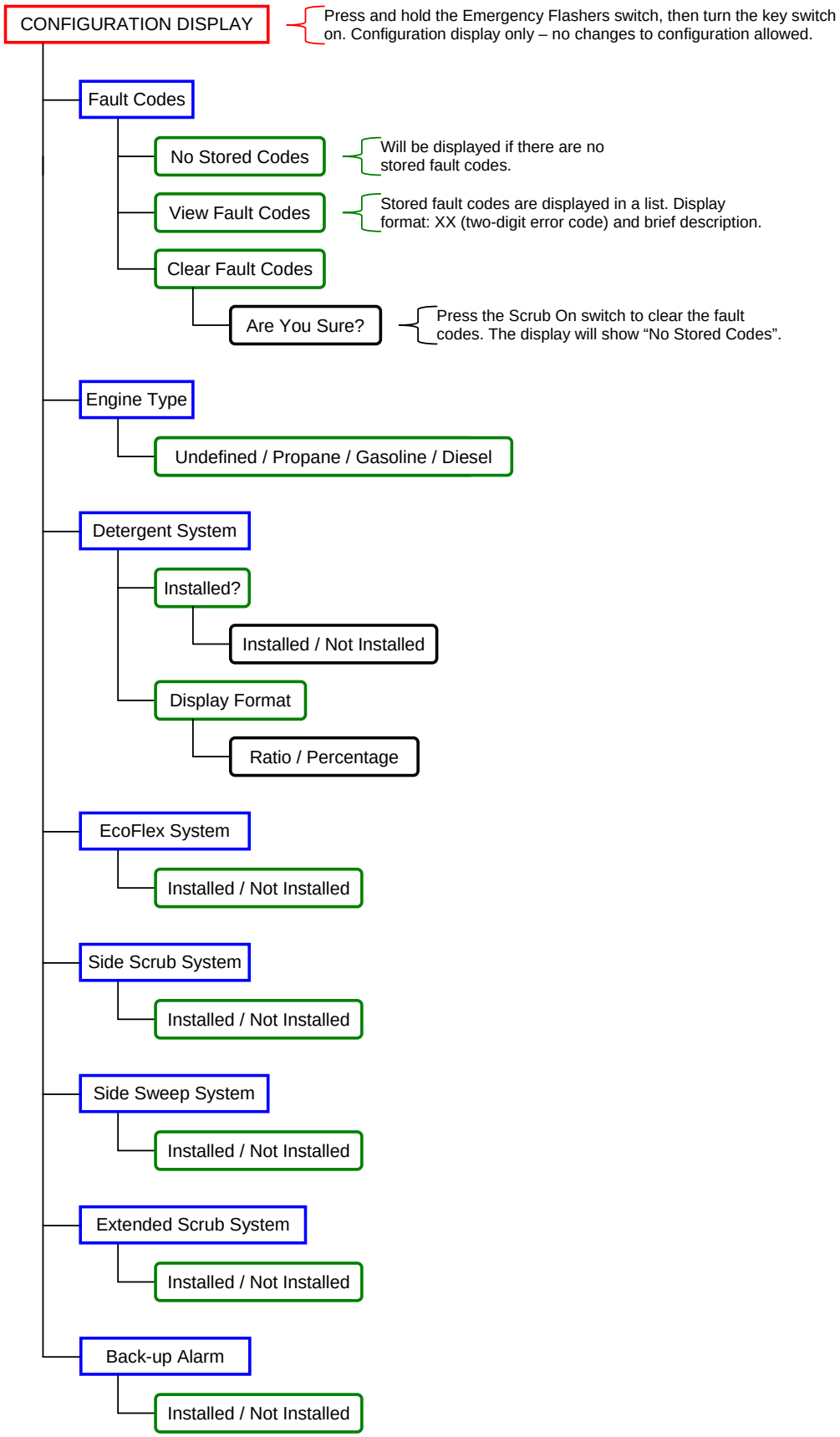
CONFIGURATION DISPLAY
Press and hold the Emergency Flashers switch, then turn the key switch on. Configuration display only – no changes to configuration allowed.
Fault Codes
No Stored Codes
Will be displayed if there are no stored fault codes.
View Fault Codes
Stored fault codes are displayed in a list. Display format: XX (two-digit error code) and brief description.
Clear Fault Codes
Are You Sure?
Press the Scrub On switch to clear the fault codes. The display will show “No Stored Codes”.
Engine Type
Undefined / Propane / Gasoline / Diesel
Detergent System
Installed?
Installed / Not Installed
Display Format
Ratio / Percentage
EcoFlex System
Installed / Not Installed
Side Scrub System
Installed / Not Installed
Side Sweep System
Installed / Not Installed
Extended Scrub System
Installed / Not Installed
Back-up Alarm
Installed / Not Installed

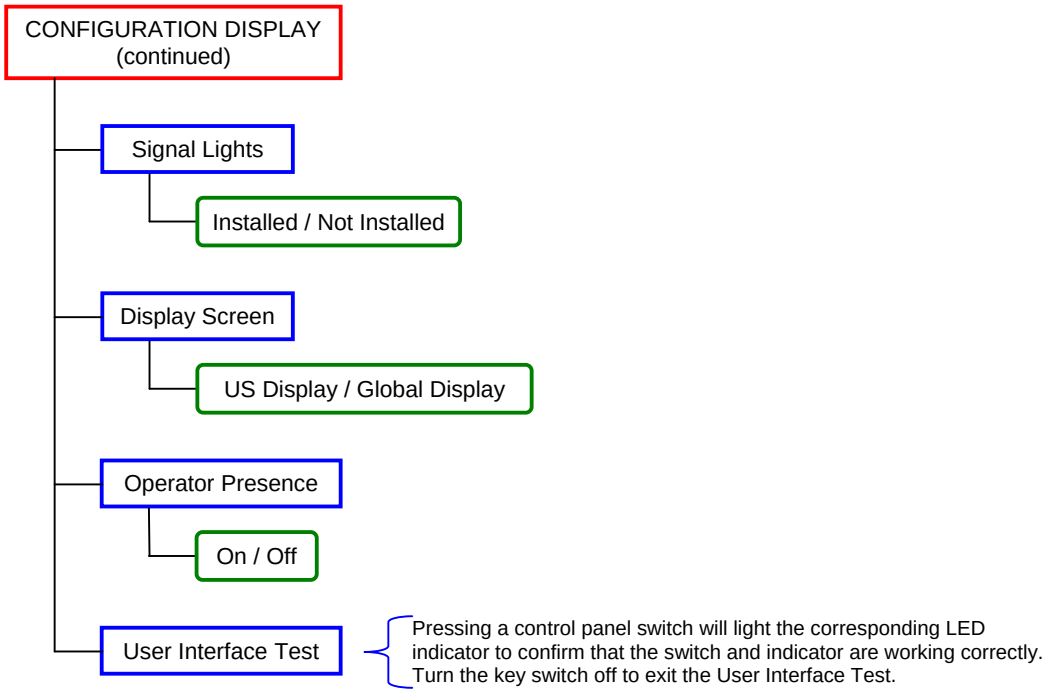


## *User Options Menu*



1. Press and hold in the red Scrub Off switch and the green Scrub On switch.
2. Turn the ignition Key Switch to the run (on) position. Continue to hold the Scrub Off and Scrub On switches until all the display panel lights turn off (approximately three seconds), then release the switches. The first line of the LCD will read **USER OPTIONS MENU**.



3. Press the Side Broom Up and Side Broom Down switches to scroll through the options menu items as shown on the following pages.
4. When the arrow is pointing to the desired menu item, press the green Scrub On switch to display the next level of menu options.
5. Press the Side Broom Up and Side Broom Down switches to select the desired option.
6. When the arrow is pointing to an option:
   - Press the green Scrub On switch to select the option. The display will then return to the previous menu level.
   - Press the red Scrub Off switch to return to the previous menu level without selecting the option.
7. To save the new setting(s), turn the Key Switch to the off position. The new setting(s) will be saved and remain in effect until changed again.

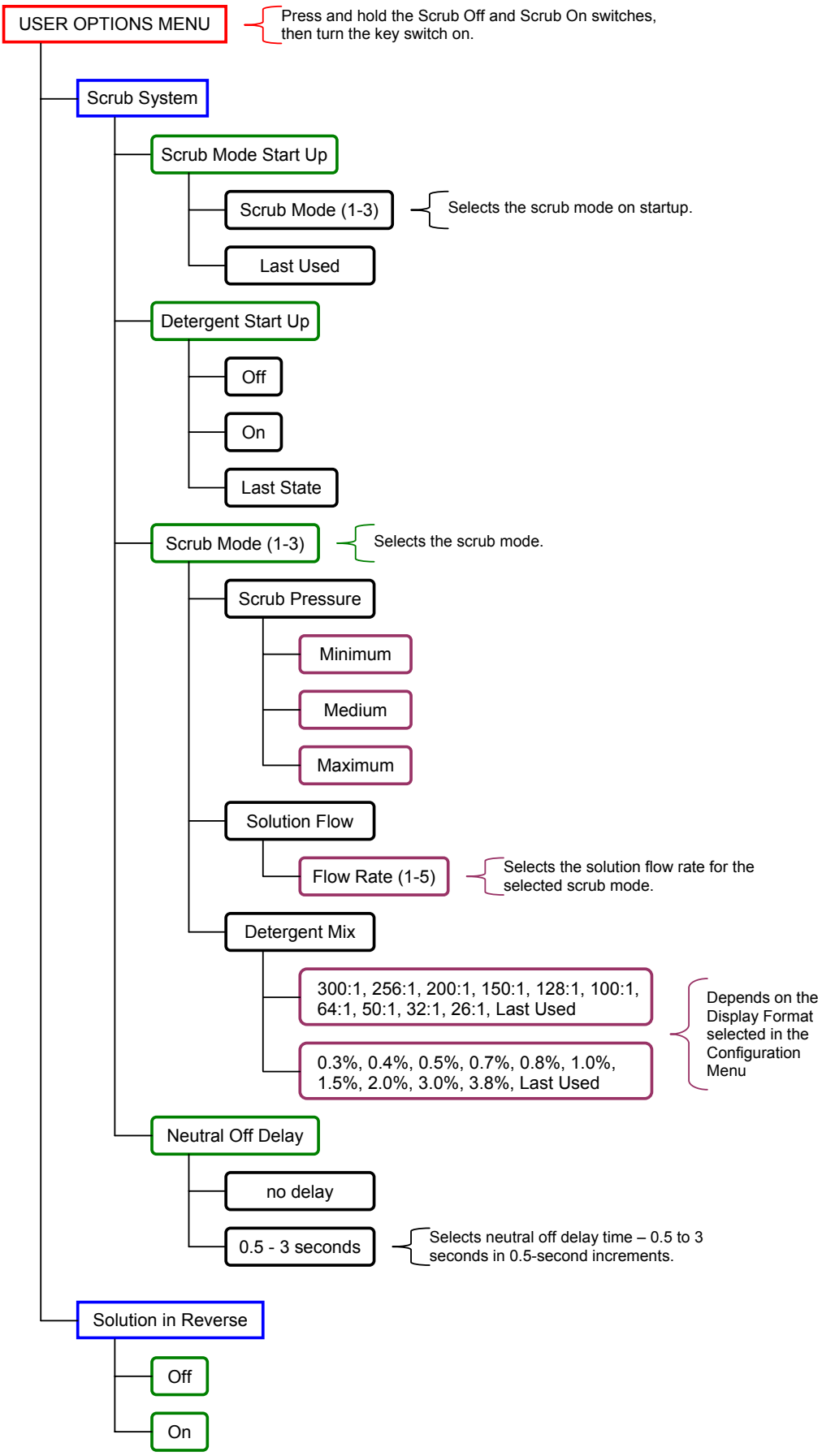
USER OPTIONS MENU
Press and hold the Scrub Off and Scrub On switches, then turn the key switch on.
Scrub System
Scrub Mode Start Up
Scrub Mode (1-3)
Selects the scrub mode on startup.
Last Used
Detergent Start Up
Off
On
Last State
Scrub Mode (1-3)
Selects the scrub mode.
Scrub Pressure
Minimum
Medium
Maximum
Solution Flow
Flow Rate (1-5)
Selects the solution flow rate for the selected scrub mode.
Detergent Mix
300:1, 256:1, 200:1, 150:1, 128:1, 100:1, 64:1, 50:1, 32:1, 26:1, Last Used
0.3%, 0.4%, 0.5%, 0.7%, 0.8%, 1.0%, 1.5%, 2.0%, 3.0%, 3.8%, Last Used
Depends on the Display Format selected in the Configuration Menu
Neutral Off Delay
no delay
0.5 - 3 seconds
Selects neutral off delay time – 0.5 to 3 seconds in 0.5-second increments.
Solution in Reverse
Off
On

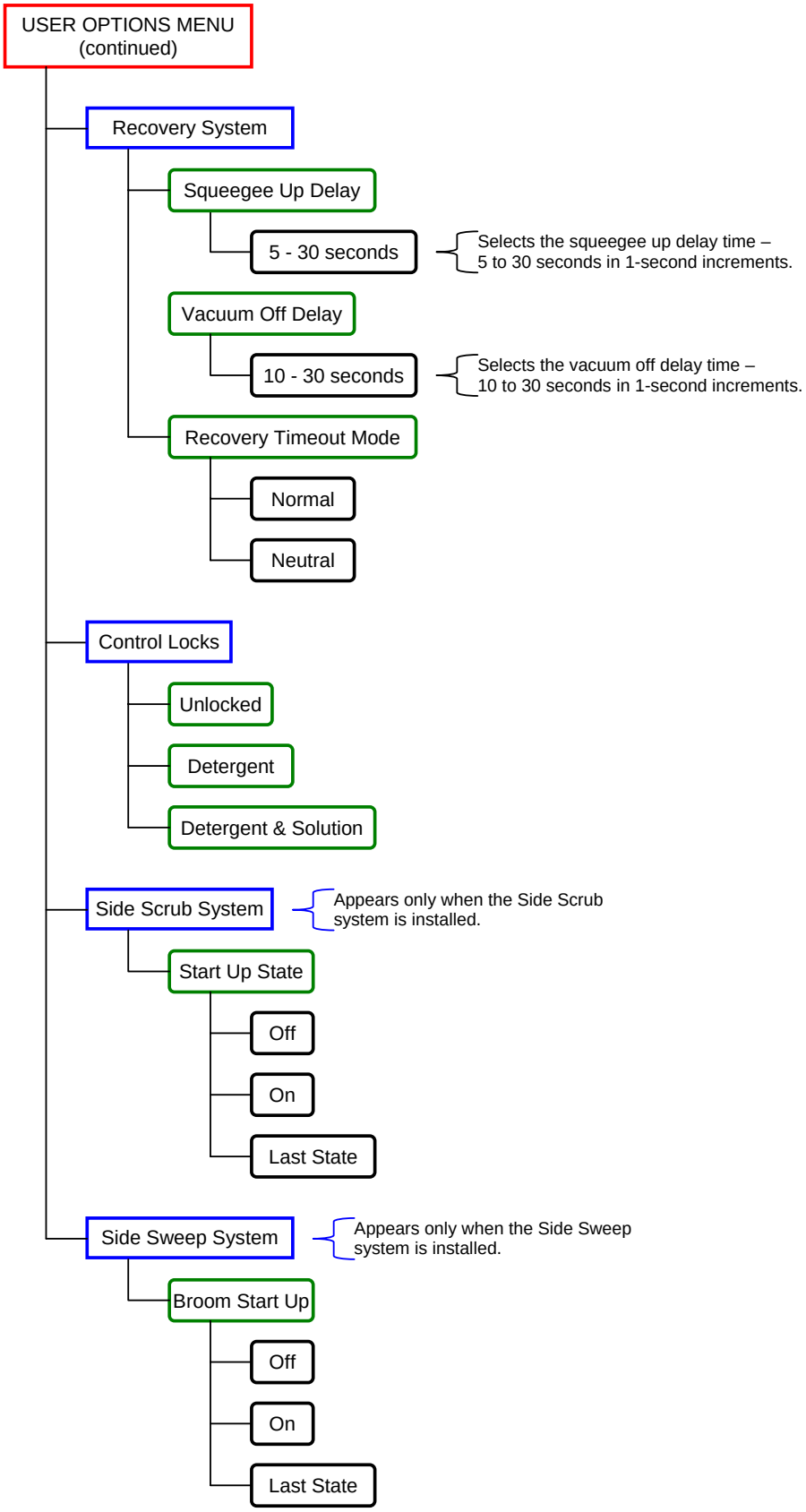
USER OPTIONS MENU
(continued)
Recovery System
Squeegee Up Delay
5 - 30 seconds
Selects the squeegee up delay time –
5 to 30 seconds in 1-second increments.
Vacuum Off Delay
10 - 30 seconds
Selects the vacuum off delay time –
10 to 30 seconds in 1-second increments.
Recovery Timeout Mode
Normal
Neutral
Control Locks
Unlocked
Detergent
Detergent & Solution
Side Scrub System
Appears only when the Side Scrub
system is installed.
Start Up State
Off
On
Last State
Side Sweep System
Appears only when the Side Sweep
system is installed.
Broom Start Up
Off
On
Last State

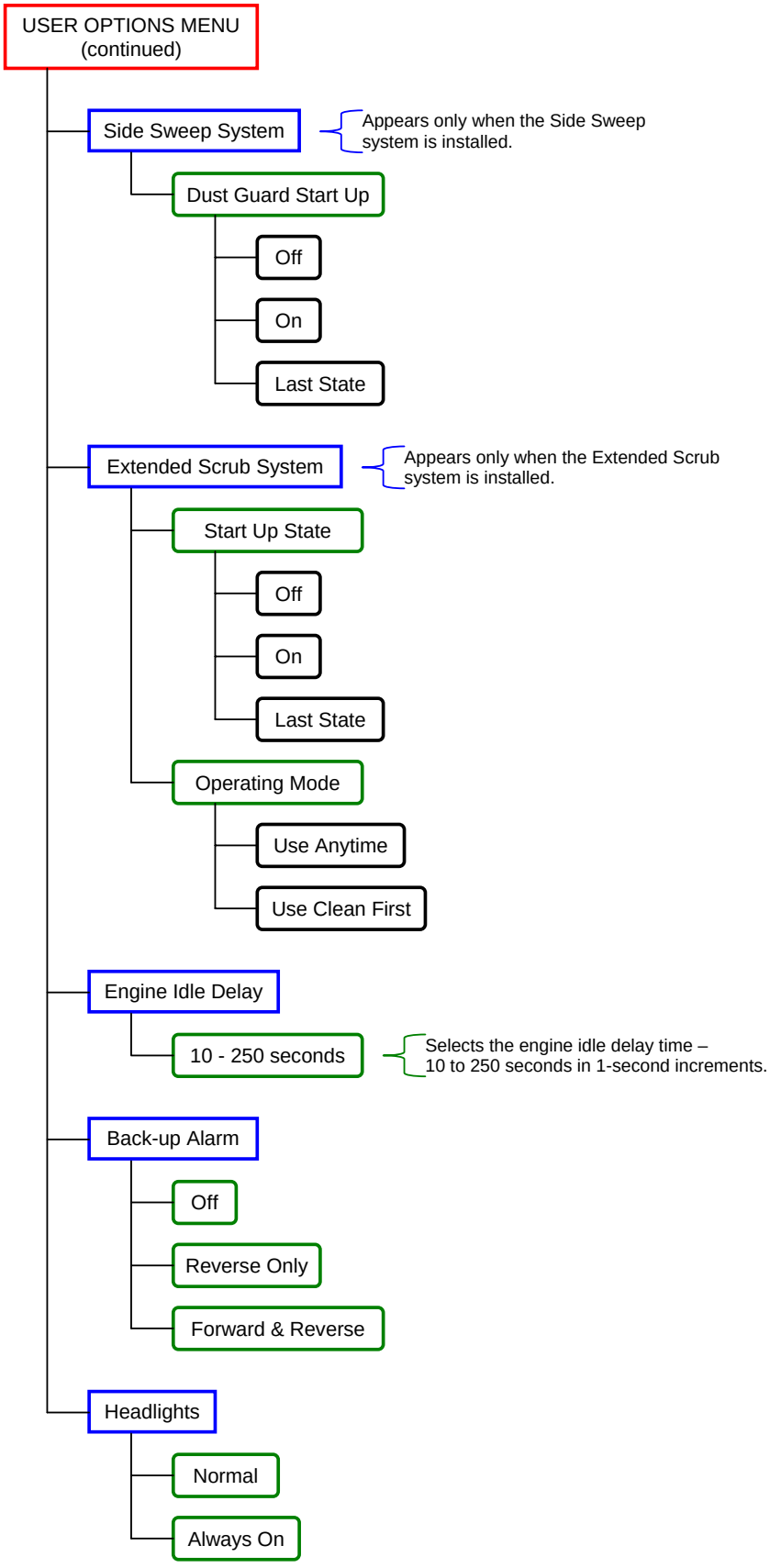
USER OPTIONS MENU
(continued)
Side Sweep System
Appears only when the Side Sweep system is installed.
Dust Guard Start Up
Off
On
Last State
Extended Scrub System
Appears only when the Extended Scrub system is installed.
Start Up State
Off
On
Last State
Operating Mode
Use Anytime
Use Clean First
Engine Idle Delay
10 - 250 seconds
Selects the engine idle delay time – 10 to 250 seconds in 1-second increments.
Back-up Alarm
Off
Reverse Only
Forward & Reverse
Headlights
Normal
Always On

## Configuration Menu



1. Press and hold the Emergency Flashers and Headlight switches.
2. Turn the ignition Key Switch to the run (on) position.
3. Continue to hold the Emergency Flashers and Headlight switches until all the display panel lights turn off (approximately three seconds), then release the switches. The first line of the LCD will read **CONFIGURATION MENU**.



4. Press the Side Broom Up and Side Broom Down switches to scroll through the configuration menu items as shown on the following pages.



5. When the arrow is pointing to the desired menu item, press the green Scrub On switch to display the next level of configuration options.
6. Press the Side Broom Up and Side Broom Down switches to select the desired option.
7. When the arrow is pointing to the configuration option:
   - Press the green Scrub On switch to select the option. The display will then return to the previous menu level.
   - Press the red Scrub Off switch to return to the previous menu level without selecting the option.
8. Turn the ignition Key Switch to the off position to save the new setting(s). The new setting(s) will be saved and remain in effect until changed again.



***Note:*** *On machines manufactured after serial number 1000042750, there is an additional item in the* ***CONFIGURATION MENU*** *that allows you to enable or disable the Operator Presence Control (OPC). When you scroll through the menu the display will show the option* ***Operator Presence****. Press the green Scrub On switch to select* ***ON*** *or* ***OFF*** *to enable or disable the OPC.*

*The default setting on Advance Condor™ XL machines is* ***OFF****. The default setting on Nilfisk ER 1300/1600 machines is* ***ON****.*

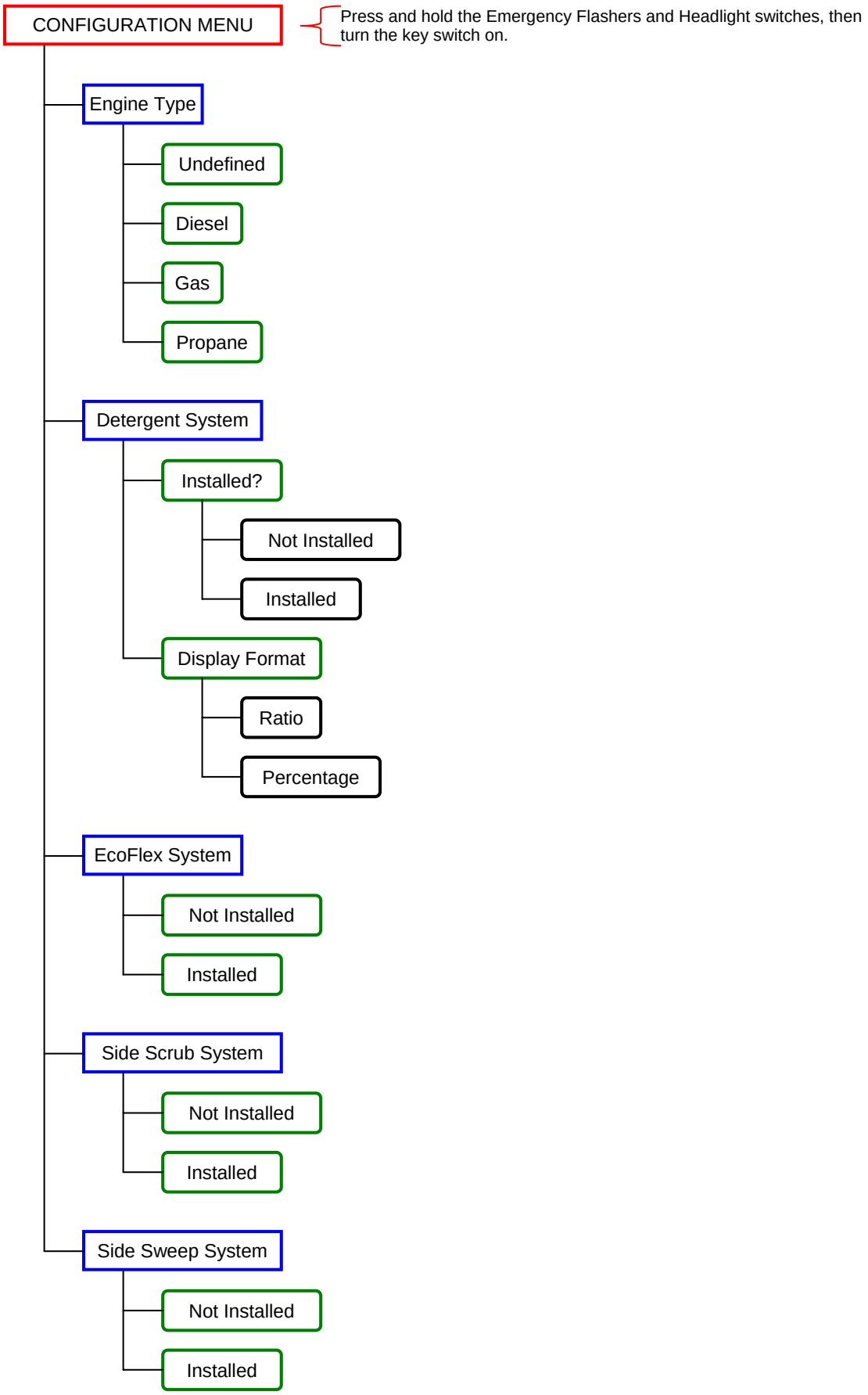
CONFIGURATION MENU
Press and hold the Emergency Flashers and Headlight switches, then turn the key switch on.
Engine Type
Undefined
Diesel
Gas
Propane
Detergent System
Installed?
Not Installed
Installed
Display Format
Ratio
Percentage
EcoFlex System
Not Installed
Installed
Side Scrub System
Not Installed
Installed
Side Sweep System
Not Installed
Installed

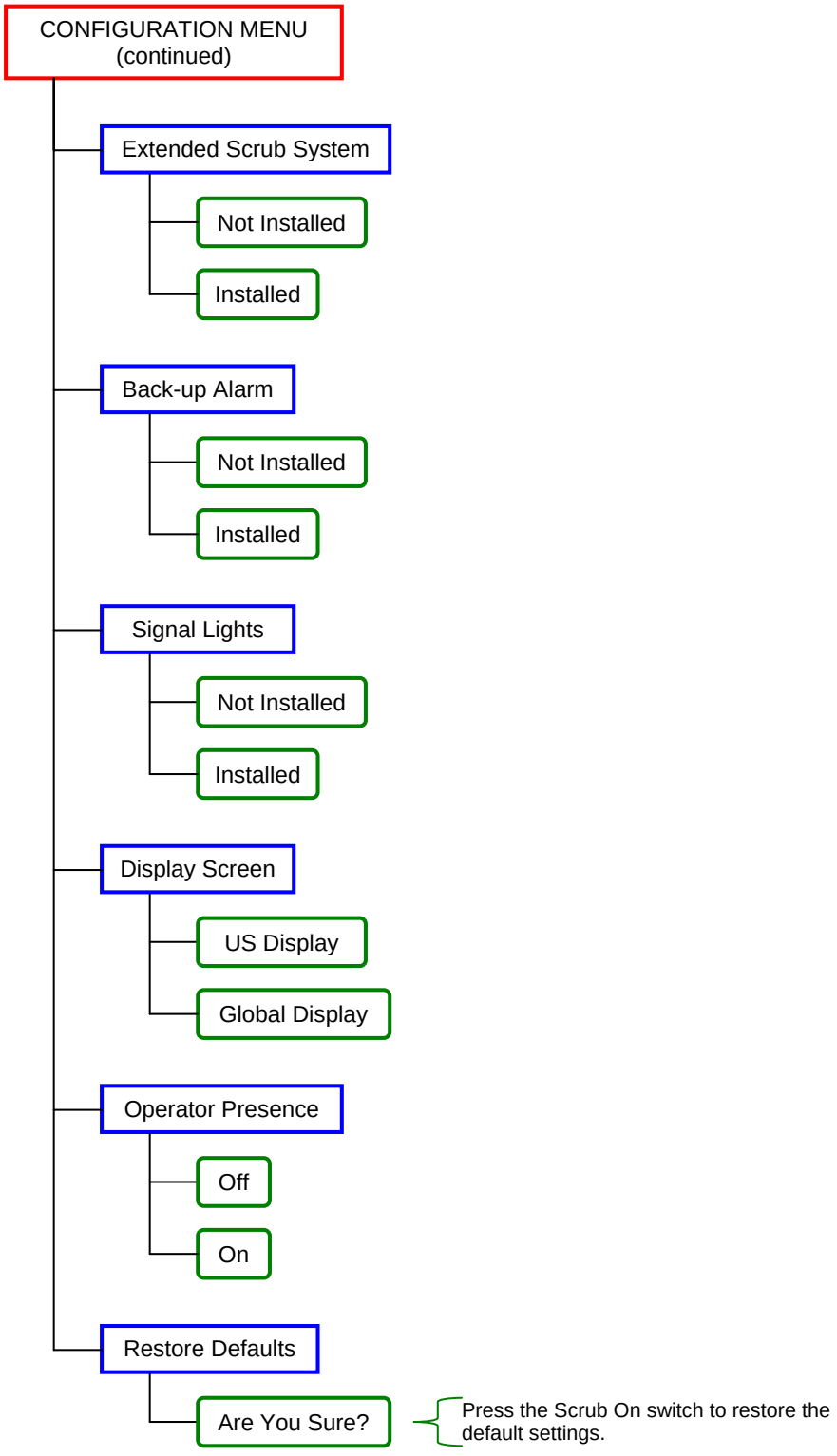
CONFIGURATION MENU
(continued)
Extended Scrub System
Not Installed
Installed
Back-up Alarm
Not Installed
Installed
Signal Lights
Not Installed
Installed
Display Screen
US Display
Global Display
Operator Presence
Off
On
Restore Defaults
Are You Sure?
Press the Scrub On switch to restore the default settings.

## Operator Presence Control (OPC)

The newer machines have an Operator Presence Control (OPC) feature that works in conjunction with the seat switch and parking brake. The OPC can be enabled or disabled in the Configuration Menu.

### OPC On

When the OPC is enabled, the machine functions as follows:

- When the seat switch is closed (Operator in the seat):
  - The machine systems operate normally.
  - Pressing the Vacuum/Wand switch toggles the Recovery system On and Off.
- When the parking brake engaged and the seat switch is open for longer than one second:
  - If the Scrub and Recovery systems are On, the machine transitions to the Wand mode.
  - Pressing the Scrub Off switch turns the Scrub system Off.
  - Pressing the Scrub On switch has no effect.
  - Pressing the Wand/Vacuum switch with the Scrub system Off toggles the Recovery system between Off and the Wand modes.
- When the parking brake is released and the seat switch is open for longer than one second:
  - If the engine is running, it is switched Off by inhibiting the ignition and start signals.
  - If the Recovery system is On and the Scrub system is Off, the Recovery system transitions to the Wand mode.
  - Pressing the Scrub Off switch turns the Scrub system Off.
  - Pressing the Scrub On switch has no effect.
  - Pressing the Wand/Vacuum switch with the Scrub system Off transitions the Recovery system between Off and the Wand modes.
- With the seat switch open, the parking brake released, the engine off and the foot brake enabled, the engine ignition and start signals are no longer inhibited.
- With the seat switch open, the parking brake released and the engine off, once the seat switch is closed the engine ignition and start signals are no longer inhibited.

### OPC Off

When the OPC is disabled, the machine functions as follows:

- When the seat switch is closed (Operator in the seat):
  - The machine systems operate normally.
  - Pressing the Vacuum/Wand switch toggles the Recovery system On and Off.
- With the parking brake engaged or released, and the seat switch is open for longer than one second:
  - The engine will continue to run.

– If the Recovery system is On, it transitions to the Wand mode.

– Pressing the Scrub Off switch turns the Scrub system off.

– Pressing the Scrub On switch has no effect.

– Pressing the Wand/Vacuum switch with the Scrub system off transitions the Recovery system between Off and the Wand modes.

# Troubleshooting

## Main Control Board Fault Codes

Fault codes are organized by machine systems (functions). The red warning indicator or the yellow attention indicator on the control panel will light, and the LCD will show a two-digit number and wrench icon. The table below lists the main control board fault codes, and a description and brief comment for each fault code.



***Note:*** *C = Critical fault code, NC = Non-Critical fault code.*

| Code# | Fault Description | Correction |
|---|---|---|
| 00 C | Solution pump(s) over current | • Check M4 main solution pump and M6 optional recycle pump wiring for problems (on same fault line), M4 wire colors (+GRN/BRN and - GRN/BLU) and M6 (+GRN/BRN and - GRA/ORN).<br>• Check pump motors for short circuits, replace as needed. |
| 00 C | Extend scrub pump over current | Check Pump motor M6 wiring for problems (+ GRN/BLU and - GRA/ORN). Same fault line used for main solution pump M4 and M6. |
| 01 C | Scrub brush pressure valve solenoids over current | • Check L5 down and L7 up pressure valve solenoid coils (on same fault line) for wiring problems, L5 wire colors (+ ORN and - WHT/VIO) and L7 ( + ORN and ORN/RED).<br>• Check coil resistance. If less than 1.8 ohms, replace. Also see main scrub on and right scrub brushes deck pressure electrical ladder detail and specs. |
| 02 C | Main power relay K1 coil over current | • Check K1 relay coil wiring for problems (+ ORN/GRN and - BLU/GRN).<br>• Check coil resistance. If less than 36 ohms, replace. Also see main power distribution electrical ladder detail. (Spec .29A @ 12V.) Replace as needed. |
| 03 NC | Wand pump over current | • Check Pump motor M8 wiring for problems (+ BLU and - BLU/RED).<br>• Check pump motor for short circuit, replace as needed.<br>• Test current draw - 12.5A full load max @12V. |
| 04 NC | Side sweep mist pump over current | • Check Pump motor M5 wiring for problems (+ BLU and - YEL/BLK).<br>• Test current draw 3.9A full load max. Note: 24V pump operating @ 12V. |

| Code# | Fault Description | Correction |
|---|---|---|
| 05 C | 2200 RPM no input @ ECM | Check for 12V (+) from controller wire J2-29 (GRA/ORN) to battery ground (-) with the engine speed switch 51 active. Should read 12V.<br>• If 0V, troubleshoot the throttle wire. If still 0V, substitute a good known controller and dashboard panel.<br>• If 12V and no 2200 RPM throttle response, test engine controller output to specific throttle control G/LP/D. See engine wiring diagram for additional help. |
| 06 NC | 2400 RPM no input @ ECM | Check for 12V (+) from controller wire J2-30 (GRA/BLU) to battery ground (-) with the engine speed switch 51 active. Should read 12V.<br>• If 0V, troubleshoot the throttle wire. If still 0V, substitute a good known controller and dashboard panel.<br>• If 12V and no 2400 RPM throttle response test engine controller output to specific throttle control G/LP/D. |
| 07 NC | Main solution solenoid valve over current | • Check L10 solenoid coil wiring for problems (+ ORN and - YEL/GRN).<br>• Check coil resistance. If less than 6 ohms, replace. Also see main scrub and right side scrub solution valves and pump electrical ladder detail. |
| 08 NC | Right side scrub solution solenoid valve over current | • Check L11 solenoid coil wiring for problems (+ ORN and - BLU/YEL).<br>• Check coil resistance. If less than 10 ohms, replace. Also see main scrub and right side scrub solution valves and pump electrical ladder detail. |
| 09 C | Vacuum fan solenoid over current | • Check L1 solenoid coil wiring for problems (+ GRN/BRN and - BRN/YEL).<br>• Check coil resistance. If less than 6 ohms, replace. Also see vacuum fan on and squeegee down electrical ladder detail. |
| 10 | Not used | |
| 11 C | Squeegee UP solenoid over current | • Check L3 solenoid coil wiring for problems (+ GRN/BRN and - BRN/GRN).<br>• Check coil resistance. If less than 6 ohms, replace. Also see vacuum fan off and squeegee up electrical ladder detail. |
| 12 C | Squeegee DN solenoid over current | • Check L2 solenoid coil wiring for problems (+ GRN/BRN and - RED/GRA).<br>• Check coil resistance. If less than 6 ohms, replace. Also see vacuum fan on and squeegee down electrical ladder detail. |
| 13 C | Scrub brush motor solenoid over current | • Check L4 solenoid coil wiring for problems (+ ORN and - ORN/BLU).<br>• Check coil resistance. If less than 6 ohms, replace. Also see main scrub on and side sweep/right scrub electrical ladder detail. |

| Code# | Fault Description | Correction |
|---|---|---|
| 14 NC | Glow plug relay K4 coil over current. | • Check K4 relay coil wiring for problems (+ ORN/GRN and - WHT/ORN).<br>• Check coil resistance. If less than 36 ohms, replace. Also see diesel glow plug starting circuit electrical ladder detail. |
| 15 C | Scrub cylinder lock solenoid over current | • Check L6 solenoid coil wiring for problems (+ ORN and - YEL/BLU).<br>• Check coil resistance. If less than 6 ohms, replace. Also see main scrub on and right scrub brushes deck pressure electrical ladder detail. |
| 16 NC | Right side scrub/sweep motor solenoid valve over current | • Check L8 solenoid coil wiring for problems (+ ORN and - BLK/WHT).<br>• Check coil resistance. If less than 6 ohms, replace. Also see main scrub on and side sweep/right scrub electrical ladder detail. |
| 17 NC | Back-up Alarm over current | • Check optional back up alarm wiring for problems (+ ORN/GRN and - BLU/BLK).<br>• Check horn for short circuit (spec 0.25A at 12V, electronic alarm) replace as needed. |
| 18 NC | Right side scrub lift solenoid over current | • Check L9 solenoid coil wiring for problems (+ ORN and - GRN/VIO).<br>• Check coil resistance. If less than 6 ohms, replace. Also see main scrub and right side scrub lift electrical ladder detail. |
| 19 NC | Horn over current | • Check H4 horn wiring for problems (+ ORN/GRN and - WHT/YEL).<br>• Check horn for short circuit (spec 4A @ 12V) replace as needed. |
| 20 NC | Left turn signal lamp over current | • Check left turn signal wiring for problems (+ YEL and - BLK).<br>• Check lamp for short (see the I/O table for circuit spec). |
| 21 NC | Right turn signal lamp over current | • Check right turn signal wiring for problems (+ GRN and - BLK).<br>• Check lamp for short (see the I/O table for circuit spec). |
| 22 NC | Head and tail lamp over current | • Check head and tail lamp wiring for problems (+ BRN, YEL/RED, ORN/BLU and - BLK).<br>• Check lamps for short (see the I/O table for circuit spec). |
| 23 NC | Left stop lamp over current | • Check left stop lamp wiring for problems (+ ORN/BRN and - BLK).<br>• Check lamps for short (see the I/O table for circuit spec). |
| 24 NC | Right stop lamp over current | Same as left stop lamp just different wire color (+ YEL/RED and - BLK). |
| 25 C | 20A Circuit breaker CB1 over current | Control board has sensed open circuit fault for CB1 power for head/tail and turn signal lamps. Check for GRA/RED wire shorted to ground. |
| 26 C | 20A Circuit breaker CB2 over current | Control board has sensed open circuit fault for CB2 power for mist pump (M5) and (M8) wash hose pump. Check for BLU wire shorted to ground. |

| Code# | Fault Description | Correction |
|---|---|---|
| 27 C | 15A Circuit breaker CB3 over current | Control board has sensed open circuit fault for CB3 power for side broom actuator motor (M7). Check for Violet wire shorted to ground. |
| 28 C | 20A Circuit breaker CB4 over current | Control board has sensed open circuit fault for CB4 power for hydraulic solenoid manifold coils (L4 - L11). Check for Orange wire shorted to ground. |
| 29 C | 10A Circuit breaker CB5 over current | Control board has sensed open circuit fault for CB5 power for hydraulic solenoid manifold coils (L1, L2 and L3) also Pumps M4 and M6. Check for GRN/BRN wire shorted to ground. |
| 30 | Side sweep lift actuator over current | • Three wires supply power to the M7 side broom lift actuator motor; check wiring for problems. Wire colors J3-4 BLU/RED (+) DN otherwise open, J3-5 WHT/RED (-) UP otherwise open, J3-7 GRA/VIO common wire + UP and - DN.<br>• Test current draw full load 20A ± 2A max.<br>• Check for frozen or binding lift linkage. Repair/replace as needed. |
| 31 NC | Detergent pump #1 over current | • Check #1 detergent pump M10 and #2 detergent pump M11 wiring for problems, #1 pump wire colors (+RED/WHT and - RED/BLU), #2 (+ BLK/YEL and - BLK/RED).<br>• Check pump motors for short circuit replace as needed. |
| 32 NC | Detergent pump #2 over current | See pump #1 |
| 33 C | Engine hot fault | Coolant temperature high - causes engine fault, sets on diesel machine only. |
| 34 C | Hydraulic temperature fault | Sets when hydraulic oil temperature exceeds 220 F for 15 seconds. |
| 35 C | Low voltage fault (battery) | One of the red display panel warning indicator lights. See the explanation for the warning icon in the ***General Information/ Warning Displays*** section. |
| 36 NC | Service engine fault | Gasoline, LP engine (GM 1.6) only, sets when ECM activates MIL output - could be for mf++-any different reasons. See the ***Engine System, Gasoline/LPG*** section for the list of engine codes and process for reading (extracting) codes. |
| 37 C | Low oil pressure fault | Diesel only - causes engine fault to set. The red warning indicator will light and the LCD will display the Low Oil Pressure Icon. |
| 38 C | Engine fault | Occurs if engine temperature too high (diesel), oil pressure low (diesel), or engine run has changed to ignition inhibit and key is on (gas and propane). Note: Engines will shut down. See the corresponding ***Engine*** section for a list of engine codes and how to read (extract) the codes. |
| 39 NC | Hydraulic filter fault | Sets to warn operator that oil filter is plugged and needs to be replaced. Note: Only activates when oil temperature is above 100 degrees F (this prevents false signal upon cold engine start-up). |

## *Systems Disabled by Faults*

The following table lists the systems that are disabled for each displayed fault code.



***Note:*** *"X" indicates that the corresponding machine system is disabled (turned off).*

| Display Code | Fault Description | Recovery System | Scrub System | Solution System | Detergent System | Side Scrub System | Side Sweep System | Side Mist System | Ext Scrub System |
|---|---|---|---|---|---|---|---|---|---|
| 00 | Solution pump(s) M4 and M6 over current | | | X | X | | | | X |
| 01 | Scrub brush pressure valve solenoids over current (L5 and L7) | | X | X | X | | | | |
| 02 | Main power relay K1 over current | X | X | X | X | X | X | X | X |
| 03 | Wash hose pump M8 over current | | | | | | | | |
| 04 | DustGuard™ mist pump M5 over current | | | | | | | X | |
| 05 | No speed input 2200 RPM @ ECM | | | | | | | | |
| 06 | No speed input 2400 RPM @ ECM | | | | | | | | |
| 07 | Main solution solenoid valve L10 over current | | | X | X | | | | |
| 08 | Right side scrub solution solenoid L11 over current | | | | | X | | | |
| 09 | Vacuum fan solenoid L1 over current | X | X | X | X | | | | |
| 10 | Not used | | | | | | | | |
| 11 | Squeegee UP solenoid L3 over current | X | X | X | X | | | | |
| 12 | Squeegee DOWN solenoid L2 over current | X | X | X | X | | | | |
| 13 | Scrub motor solenoid L4 over current | | X | X | X | | | | |
| 14 | Glow plug relay K4 coil over current | | | | | | | | |
| 15 | Scrub cylinder lock solenoid L6 over current | | X | X | X | | | | |
| 16 | Right side scrub/sweep motor solenoid L8 over current | | | | | X | X | | |
| 17 | Back-up alarm over current | | | | | | | | |
| 18 | Right side scrub lift cylinder solenoid L9 over current | | | | | X | | | |
| 19 | Horn over current | | | | | | | | |
| 20 | Left turn signal lamp over current | | | | | | | | |
| 21 | Right turn signal lamp over current | | | | | | | | |
| 22 | Head and tail lamp over current | | | | | | | | |
| 23 | Left stop lamp over current | | | | | | | | |
| 24 | Right stop lamp over current | | | | | | | | |

| Display Code | Fault Description | Recovery System | Scrub System | Solution System | Detergent System | Side Scrub System | Side Sweep System | Side Mist System | Ext Scrub System |
|---|---|---|---|---|---|---|---|---|---|
| 25 | 20A circuit breaker CB1 over current | | | | | | | | |
| 26 | 20A circuit breaker CB2 over current | | | | | | | | |
| 27 | 15A circuit breaker CB3 over current | | | | | | | | |
| 28 | 20A circuit breaker CB4 over current | | | | | | | | |
| 29 | 10A circuit breaker CB5 over current | | | | | | | | |
| 30 | Side sweep lift M7 actuator over current | | | | | | X | | |
| 31 | #1 detergent pump M10 over current | | | | X | | | | |
| 32 | #2 detergent pump M11 over current | | | | X | | | | |
| 33 | Engine hot fault (diesel) | X | X | X | X | X | X | X | X |
| 34 | Hydraulic oil temperature fault | | | | | | | | |
| 35 | Low voltage fault (battery) | | | | | | | | |
| 36 | Service engine fault GM (non critical) | | | | | | | | |
| 37 | Low oil pressure (diesel engine) | X | X | X | X | X | X | X | X |
| 38 | Engine fault (critical) | X | X | X | X | X | X | X | X |
| 39 | Hydraulic filter fault (plugged) | | | | | | | | |

# Electrical System

## Functional Description

### Overview

The electrical system consists of the fuse, relay and circuit breakers not covered in the ***Control System*** section or the other manual sections.

### Power Supplies

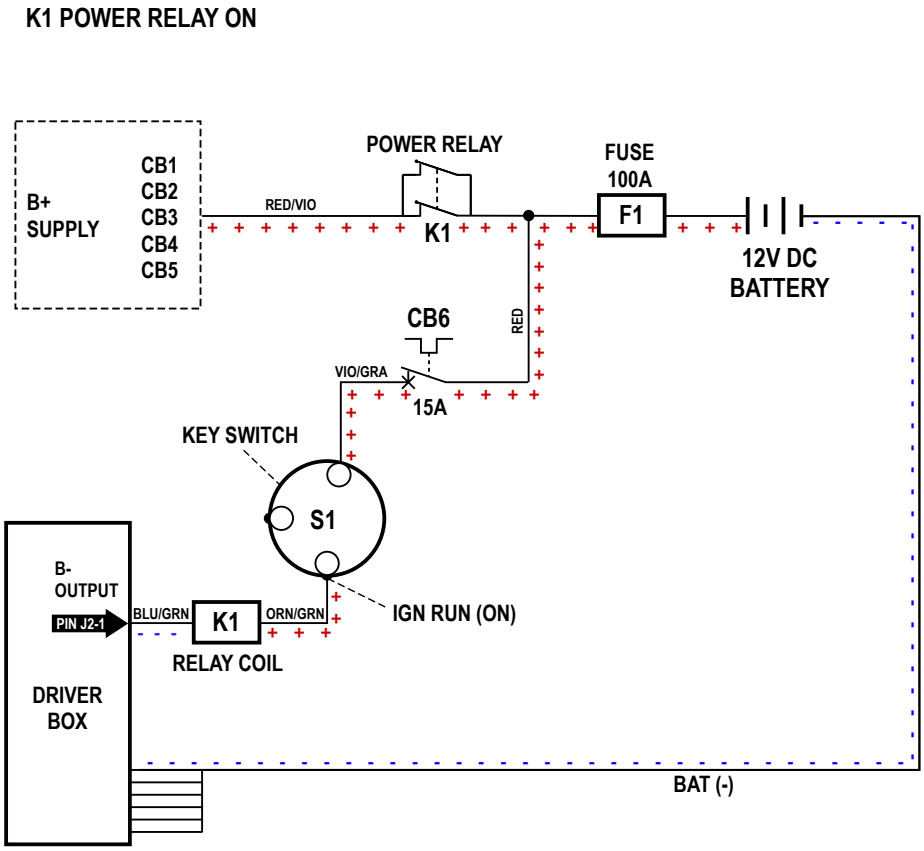


### Circuit Description

- The **100-amp Fuse F1** must be closed to provide positive battery voltage to the entire electrical system.
- The circuit breaker **CB6** must be closed to provide voltage to the **Key Switch S1**.
- The **Ignition Key Switch S1** must be on to provide positive battery voltage to the **K1 Relay Coil** and certain inputs on the **Driver Box**.
- The circuit breakers **CB1**, **CB2**, **CB3**, **CB4** and **CB5** must be closed to provide voltage to the side broom actuator, lighting systems, electric pump motors and solenoid valves.

# Component Locations

## K1 Power Relay

The **K1 Power Relay** is mounted inside the control board assembly. Note that a second identical power relay (K4) is installed on diesel models as the glow plug power relay.

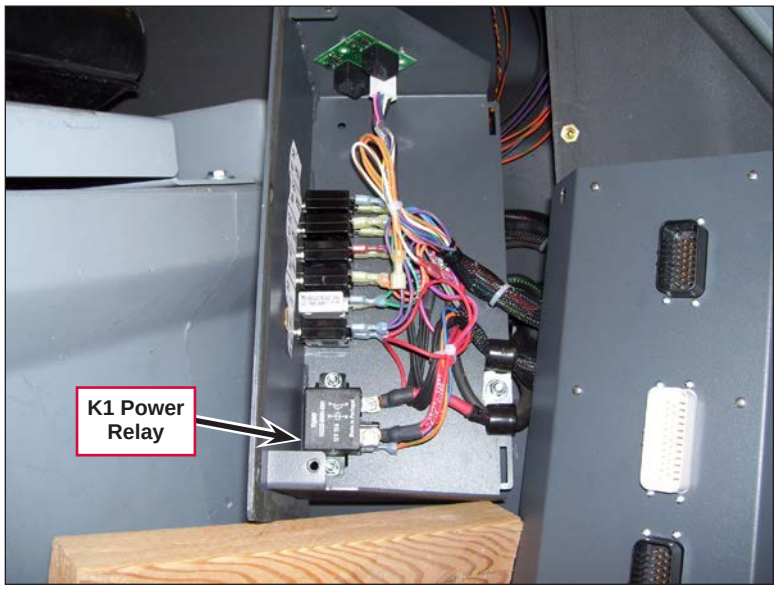


## Circuit Breakers

The **Circuit Breakers** are mounted on the control board to the left of the Operator position.



## *100-amp Fuse F1*

The **100-amp Fuse F1** is tied up with the engine harness connectors and can be accessed by tipping out the recovery tank.

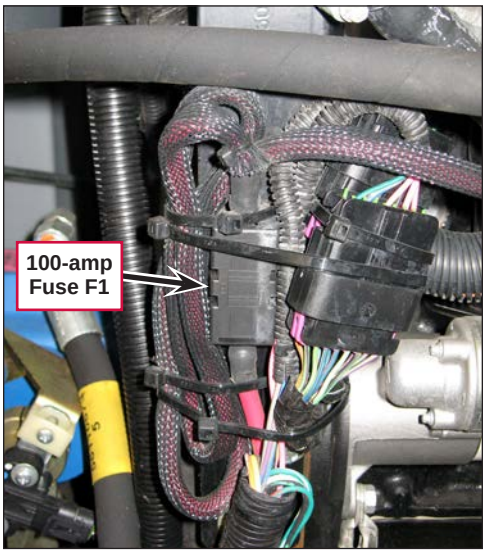


## *Troubleshooting*

| Problem | Cause | Correction |
|---|---|---|
| No power to the machine | The 100-amp fuse **F1** is open. | Replace the fuse. |
| No machine systems will operate | Main power relay K1 coil over current (fault code **02** displayed) | • Check K1 relay coil wiring for problems (+ ORN/ GRN and - BLU/GRN).<br>• Check coil resistance. If less than 36 ohms, replace. Also see main power distribution electrical ladder detail. (Spec 0.29A @ 12V). Replace as necessary. |
| No glow plug icon displayed on LCD (diesel engine only) | Glow plug relay K4 coil over current (fault code **14** displayed) | • Check K4 relay coil wiring for problems (+ ORN/ GRN and - WHT/ORN).<br>• Check coil resistance. If less than 36 ohms, replace. Also see diesel glow plug starting circuit electrical ladder detail. |
| Fault code **20** displayed | Left turn signal lamp over current | • Check left turn signal wiring for problems (+ YEL and - BLK).<br>• Check lamp for short (see the I/O table for circuit spec). |
| Fault code **21** displayed | Right turn signal lamp over current | • Check right turn signal wiring for problems (+ GRN and - BLK).<br>• Check lamp for short (see the I/O table for circuit spec). |
| Fault code **22** displayed | Head and tail lamp over current | • Check head and tail lamp wiring for problems (+ BRN, YEL/RED, ORN/ BLU and - BLK).<br>• Check lamps for short (see the I/O table for circuit spec). |

| Problem | Cause | Correction |
|---|---|---|
| Fault code **23** displayed | Left stop lamp over current | • Check left stop lamp wiring for problems (+ ORN/BRN and - BLK).<br>• Check lamps for short (see the I/O table for circuit spec). |
| Fault code **24** displayed | Right stop lamp over current | Same as left stop lamp just different wire color (+ YEL/RED and - BLK). |
| Fault code **25** displayed | 20A Circuit breaker CB1 over current | Control board has sensed open circuit fault for CB1 power for head/tail and turn signal lamps. Check for GRA/RED wire shorted to ground. |
| Fault code **26** displayed | 20A Circuit breaker CB2 over current | Control board has sensed open circuit fault for CB2 power for mist pump (M5) and (M8) wash hose pump. Check for BLU wire shorted to ground. |
| Fault code **27** displayed | 15A Circuit breaker CB3 over current | Control board has sensed open circuit fault for CB3 power for side broom actuator motor (M7). Check for VIO wire shorted to ground. |
| Fault code **28** displayed | 20A Circuit breaker CB4 over current | Control board has sensed open circuit fault for CB4 power for hydraulic solenoid manifold coils (L4-L 11). Check for ORN wire shorted to ground. |
| Fault code **29** displayed | 10A Circuit breaker CB5 over current | Control board has sensed open circuit fault for CB5 power for hydraulic solenoid manifold coils (L1, L2 and L3), and also Pumps M4 and M6. Check for GRN/BRN wire shorted to ground. |
| Fault code **35** displayed | Low voltage fault (battery) | • Check the alternator output.<br>• Test the battery.<br>• Clean and tighten the cables. |

# Specifications

## Component Specifications

| Component | Specifications |
|---|---|
| K1 and K4 Relays | Current – 0.29 Amps @ 12V |
| | Nominal Coil Resistance – 46 ± 5 ohms |

## Connector Callout – Relay PCB

| Pin# | Color | Type | Voltage | Pin Description and Function |
|---|---|---|---|---|
| J7-1 | VIO/GRA | Input | B+ | Module relays load power supply |
| J7-2 | BLU/PINK | Output | B+ | Engine ECU starter relay command |
| J7-3 | WHT/BRN | Input | 0V Floats | Engine start inhibit signal * |
| J7-4 | BLK | Input | B- | Module relays coil ground supply |
| J7-5 | PINK | Output | B+ | Engine ECU ignition run relay command |
| J7-6 | VIO/BRN | Input | B+ | Module starter relay Bat +coil signal |
| J7-7 | YEL/WHT | Input | 0V Floats | Engine run inhibit signal ** |
| J7-8 | ORN/GRN | Input | B+ | Module ignition relay Bat+ coil signal |



**** Note:*** *The normal condition for the start inhibit is in its non-inhibited state. A float voltage of approximately 8V (when referenced to B-) is measured when the key is in the start position. When inhibited, the signal is pulled to ground, will read 0V and will prevent the engine from cranking. This prevents the starter relay from being energized.*



***** Note:*** *The normal condition for the run inhibit is its non-inhibited state. A float voltage of approximately 10V (when referenced to B-) is measured when the key is in the start/run and run positions. When inhibited, the signal is pulled to ground, will read 0V and will prevent the engine ECU from receiving its needed input switch command. This prevents the ignition system from firing, and if the engine is running will cause it to shut down.*

## *Input/Output Table*

| Pin ID | Desig. | Pin Assignment | Signal | Nominal Voltage at Connector (when activated) | Ref, To | Load or Supply Characteristics | Comments |
|---|---|---|---|---|---|---|---|
| J1-1 | Input | Engine Run | Digital Voltage | 0V (for Gas/ Propane); B+ (for Diesel) | B- | Engine Control Module output | Switch to ground, ground = run, float = not running (for Gas/Propane); Switch to Vbat (for Propane) |
| J1-2 | CANbus | CAN L | CAN Bus (-) | 0-5V | J1-3 | Differential serial data | User interface panel serial communication |
| J1-3 | CANbus | CAN H | CAN Bus (+) | 0-5V | J1-2 | Differential serial data | User interface panel serial communication |
| J1-4 | | Not Used | | | | | |
| J1-5 | | Seat Switch | Digital voltage | 0V | B- | Switch to ground | Ground or open, closes when Operator in seat |
| J1-6 | | Not Used | | | | | |
| J1-7 | Input | Fuel Level Sensor (gas & diesel) | Variable resistance | 0.40 - 1.66V | B- | Variable resistance to ground, 33 - 240 ohms | Nominal voltage provided is subject to change if additional resolution is required |
| | | Fuel Level Sensor (LP) | Digital voltage | 0V | B- | Switch to ground | Ground or open, closed when tank is empty |
| J1-8 | | Ground | | | | | |
| J1-9 | | Ground | | | | | |
| J1-10 | 5V output | Throttle Position (3.3V-A) | 3.3V-A | +3.3V | B- | Pedal position potentiometer end 5K ohm | Drive Pedal sensor High side |
| J1-11 | ground output | Throttle Position Ground | Ground | 0V | B- | Pedal position potentiometer end 5K ohm | Drive Pedal sensor Low side |
| J1-12 | Input | Ignition Input Voltage | Analog voltage | B+ | B- | System voltage | From key switch Ignition position |
| J1-13 | | Ground | | | | | |
| J1-14 | | Ground | | | | | |
| J1-15 | | Ground | | | | | |

| Pin ID | Desig. | Pin Assignment | Signal | Nominal Voltage at Connector (when activated) | Ref, To | Load or Supply Characteristics | Comments |
|---|---|---|---|---|---|---|---|
| J1-16 | Input | Horn Switch | Digital voltage | 0V | B- | Switch to ground | Pushbutton switch - ground or open - closed to activate horn |
| J1-17 | | Ground | | | | | |
| J1-18 | Ground | Ground | Ground | 0V | B- | Ground | |
| J1-19 | Input | Hydraulic Fluid Temp | Variable resistance | 0.16 - 2.24V | B- | Variable resistance to ground, 12-500 ohms | |
| J1-20 | Input | Brake Pedal Switch | Digital voltage | 0V | B- | Switch to ground | Closes when brake pedal released |
| J1-21 | Input | Solution Empty Switch | Digital voltage | 0V | B- | Switch to ground | Ground or open, closes when tank is empty |
| J1-22 | Output | Start Inhibit | Low side driver | 0V | B- | MOSFET gate on relay PCB assy. - 3 mA @12V | Ground or float |
| J1-23 | | Ground | | | | | |
| J1-24 | Input | Start KEYPOS Switch | Digital voltage | B+ | B- | System voltage | From key switch |
| J1-25 | Input | Check Engine Switch | Digital voltage | 0V | B- | Engine Control Module low side output | Switch to ground, |
| J1-26 | | Ground | | | | | |
| J1-27 | Input | Recovery Full Switch | Digital voltage | 0V | B- | Switch to ground | Level switch, ground or open, opens when tank is full |
| J1-28 | | Ground | | | | | |
| J1-29 | | Ground | | | | | |
| J1-30 | Input | Engine Coolant Temp | Analog voltage | 0.34 - 2.93 | B- | Engine Control Module low side output | |
| J1-31 | Input | Throttle Position Sensor | Analog voltage | 0 - 5V | B- | Pedal position potentiometer wiper 5K ohm | Drive Pedal sensor wiper (0-5K ohm) |

| Pin ID | Desig. | Pin Assignment | Signal | Nominal Voltage at Connector (when activated) | Ref, To | Load or Supply Characteristics | Comments |
|---|---|---|---|---|---|---|---|
| J1-32 | Input | Hydraulic Filter Switch | Digital voltage | 0V | B- | Switch to ground | Ground or open, closed when filter plugged |
| J1-33 | Input | Extend Scrub Level Switch | Digital voltage | 0V | B- | Switch to ground | Ground or open, closed when tank is empty |
| J1-34 | Output | Ignition Inhibit | Low side driver | 0V | B- | MOSFET gate on relay PCB assy. - 3 mA@12V | Ground or float |
| J1-35 | | Ground | | | | | |
| J2-1 | Output | Main Power Relay | Low side driver | 0V | B- | Relay coil - 0.29A @12V | 46 ± 5 ohms |
| J2-2 | Output | Side Sweep/Scrub Solenoid | Low side driver | 0V | B- | Hydraulic coil - 1.5A @12V | 8 ohms @ 20°C |
| J2-3 | Output | Side Scrub Lift Solenoid | Low side driver | 0V | B- | Hydraulic coil - 1.5A @12V | 8 ohms @ 20°C |
| J2-4 | Output | Scrub Lock Solenoid | Low side driver | 0V | B- | Hydraulic coil - 1.5A @12V | 8 ohms @ 20°C |
| J2-5 | Output | Squeegee Down Solenoid | Low side driver | 0V | B- | Hydraulic coil - 1.5A @12V | 8 ohms @ 20°C |
| J2-6 | Output | Squeegee Up Solenoid | Low side driver | 0V | B- | Hydraulic coil - 1.5A @12V | 8 ohms @ 20°C |
| J2-7 | Output | Scrub Brush Solenoid | Low side driver | 0V | B- | Hydraulic coil - 1.5A @12V | 8 ohms @ 20°C |
| J2-8 | | Vacuum Motor Solenoid | Low side driver | 0V | B- | Hydraulic coil - 1.5A @12V | 8 ohms @ 20°C |
| J2-9 | | Extended Scrub Water Solenoid | Low side driver | 0V | B- | Solution solenoid - 1.5A @12V | 17W |
| J2-10 | | Side Scrub Solution Solenoid | Low side driver | 0V | B- | Solution solenoid - 1.0A @12V | 11W |
| J2-11 | Output | Backup Audible Alarm | Low side driver | 0V | B- | Electronic alarm 0.25A @12V | |
| J2-12 | Power (B+) | Circuit Breaker 4 (VACC4) | Power | 12 - 15 VDC | B- | System voltage | Power from circuit breaker 4 (20A) |

| Pin ID | Desig. | Pin Assignment | Signal | Nominal Voltage at Connector (when activated) | Ref, To | Load or Supply Characteristics | Comments |
|---|---|---|---|---|---|---|---|
| J2-13 | Output | Glow Plug Relay | Low side driver | 0V | B- | Relay coil - 0.29A @12V | 46 ± 5 ohms |
| J2-14 | | Ground | | | | | |
| J2-15 | | Ground | | | | | |
| J2-16 | | Ground | | | | | |
| J2-17 | Ground | Ground | Ground | 0V | B- | Ground | |
| J2-18 | Ground | Ground | Ground | 0V | B- | Ground | |
| J2-19 | | Ground | | | | | |
| J2-20 | | Ground | | | | | |
| J2-21 | | Ground | | | | | |
| J2-22 | Output | Main Solution Solenoid | Low side driver | 0V | B- | Solution solenoid - 1.5A @12V | 17W |
| J2-23 | Power (B+) | Circuit Breaker 5 (VACC5) | Power | 12 -1 5 VDC | B- | System voltage | Power from circuit breaker 5 (10A) |
| J2-24 | Output | Scrub Pressure Up | Low side PWM driver | PWM 0 - 12V | B- | Hydraulic coil - 2.1A @12V | 2.2 ohms @ 20°C |
| J2-25 | | Ground | | | | | |
| J2-26 | Output | Scrub Pressure Down | Low side PWM driver | PWM 0 - 12V | B- | Hydraulic coil - 2.1A @12V | 2.2 ohms @ 20°C |
| J2-27 | | Ground | | | | | |
| J2-28 | | Ground | | | | | |
| J2-29 | Output | ECM Engine 2200 RPM | High side driver | 12V | B- | Engine Control Module input | 12V for 2400 RPM, float otherwise |
| J2-30 | Output | ECM Engine 2400 RPM | High side driver | 12V | B- | Engine Control Module input | 12V for 2200 RPM, float otherwise |
| J2-31 | Output | Left Front Turn Lamp | High side driver | 12V | B- | Incandescent lamp - 0.33A @12V | 0.4A @14.5V (4W turn lamp) |

| Pin ID | Desig. | Pin Assignment | Signal | Nominal Voltage at Connector (when activated) | Ref, To | Load or Supply Characteristics | Comments |
|---|---|---|---|---|---|---|---|
| J2-32 | Output | Right Front Turn Lamp | High side driver | 12V | B- | Incandescent lamp - 0.33A @12V | 0.4A @14.5V (4W turn lamp) |
| J2-33 | Output | Left Rear Stop/Turn | High side driver | 12V | B- | Incandescent lamp - 2.2A @12V | 2.7A @14.5V (26W stop & turn lamp) |
| J2-34 | Output | Right Rear Stop/Turn | High side driver | 12V | B- | Incandescent lamp - 2.2A @12V | 2.7A @14.5V (26W stop & turn lamp) |
| J2-35 | Output | Extended Scrub Pump | Low side PWM driver | PWM 0 - 12V | B- | Pump motor 11.5 FLA @ 12V, 46 LRA | 5KHz variable duty cycle |
| J3-1 | Power (B+) | Circuit Breaker 1 (VACC1) | Power | 12 - 15 VDC | B- | System voltage | Power from circuit breaker 1 (20A) |
| J3-2 | Output | Main Solution Pump | Low side PWM driver | PWM 0 - 12V | B- | Pump motor 11.5 FLA @ 12V, 46 LRA | 5KHz variable duty cycle |
| J3-3 | | Ground | | | | | |
| J3-4 | Output | Side Sweep Actuator - HI (Red Lead) | H-bridge driver | 12V | B- | Actuator motor 20+/-2 FLA, 80 LRA (est.) | Bridge (switching power/ground) (+) for Down, otherwise open |
| J3-5 | Output | Side Sweep Actuator - LO (Black Lead) | H-bridge driver | 0V | B- | Actuator motor 20+/-2 FLA, 80 LRA (est.) | Bridge (switching power/ground) (-) for Up, otherwise open |
| J3-6 | | Ground | | | | | |
| J3-7 | Output | Side Sweep Actuator - MID (White, Common Lead) | H-bridge driver | B+ or 0V | B- | Actuator motor 20+/-2 FLA, 80 LRA (est.) | Bridge (switching power/ground) (+) for Up, (-) for Down |
| J3-8 | Output | Head / Tail Lamps | High side driver | 12V | B- | Incandescent lamp - 9.3 @12V | 11.3A @14.5V (2x 50W headlamp, 2x 5.6W tail lamp) |
| J3-9 | Output | Circuit Breaker 1 (VACC1) | Power | 12 - 15 VDC | B- | System voltage | Power from circuit breaker 1 (20A) |

| Pin ID | Desig. | Pin Assignment | Signal | Nominal Voltage at Connector (when activated) | Ref, To | Load or Supply Characteristics | Comments |
|---|---|---|---|---|---|---|---|
| J3-10 | | Ground | | | | | |
| J3-11 | Ground | Ground | Ground | 0V | B- | Ground | |
| J3-12 | Ground | Ground | Ground | 0V | B- | Ground | |
| J3-13 | Ground | Ground | Ground | 0V | B- | Ground | |
| J3-14 | Power (B+) | Circuit Breaker2 (VACC2) | Power | 12 - 15 VDC | B- | System voltage | Power from circuit breaker 2 (20A) |
| J3-15 | Power (B+) | Circuit Breaker 2 (VACC2) | Power | 12 - 15 VDC | B- | System voltage | Power from circuit breaker 2 (20A) |
| J3-16 | Power (B+) | Circuit Breaker 3 (VACC3) | Power | 12 - 15 VDC | B- | System voltage | Power from circuit breaker 3 (15A) |
| J3-17 | Output | Horn | Low side driver | 0V | B- | Electromagnetic horn 4A @12V | |
| J3-18 | Output | Side Sweep Mist Pump | Low side driver | 0V | B- | Pump motor 3.9 FLA @ 24V, 16 LRA | 24V pump operated at 12V |
| J3-19 | Output | Detergent Pump 2 (-) | H-bridge driver | 0 to B+ | B- | 0.65A @ 12V | Pulsed on and off at a rate less than 10 Hz |
| J3-20 | Output | Detergent Pump 2 (+) | H-bridge driver | 0 to B+ | B- | 0.65A @ 12V | Pulsed on and off at a rate less than 10 Hz |
| J3-21 | Output | Detergent Pump 1 (-) | H-bridge driver | 0 to B+ | B- | 0.65A @ 12V | Pulsed on and off at a rate less than 10 Hz |
| J3-22 | Output | Detergent Pump 1 (+) | H-bridge driver | 0 to B+ | B- | 0.65A @ 12V | Pulsed on and off at a rate less than 10 Hz |
| J3-23 | Output | Wand Solution Pump | Low side driver | 0V | B- | Pump motor 12.5 FLA@12V, 50 LRA | |

## Shop Measurements - Driver Box

Shop measurement values can help you recognize “normal” values. The values in this table were measured on one propane engine model with the black voltmeter lead connected to battery negative and everything connected. The model had a right side scrub option with no side sweep.

| Pin ID | Wire Color | Pin Assignment | Signal | Nominal Voltage at Connector (when activated) | Load or Supply Characteristics | “Real World” Shop Measurements | Comments |
|---|---|---|---|---|---|---|---|
| J1-1 | GRA | Engine Run | Digital Voltage | 0V (for Gas/ Propane); B+ (for Diesel) | Engine Control Module output | 11.5v key on<br>0.01v running | Switch to ground, ground = run, float = not running (for Gas/Propane); Switch to Vbat (for Propane) |
| J1-2 | BLK/YEL | CAN L | CAN Bus (-) | 0-5V | Differential serial data | 2.49v key on | User interface panel serial communication |
| J1-3 | ORN/BLK | CAN H | CAN Bus (+) | 0-5V | Differential serial data | 2.50v key on | User interface panel serial communication |
| J1-4 | | Not Used | | | | | |
| J1-5 | YEL | Seat Switch | Digital voltage | 0V | Switch to ground | 12.8v off seat<br>0.008v on seat | Ground or open, closes when Operator in seat |
| J1-6 | | Not Used | | | | | |
| J1-7 | BRN/ WHT | Fuel Level Sensor (gas & diesel) | Variable resistance | 0.40 - 1.66V | Variable resistance to ground, 33 - 240 ohms | | Nominal voltage provided is subject to change if additional resolution is required |
| | | Fuel Level Sensor (LP) | Digital voltage | 0V | Switch to ground | 3.3v not empty | Ground or open, closed when tank is empty |
| J1-8 | | Not Used | | | | | |
| J1-9 | | Not Used | | | | | |
| J1-10 | BRN/ WHT | Throttle Position Supply (3.3V-A) | 3.3V-A | +3.3V | Pedal position potentiometer end 5K ohm | 3.24v key on | Drive Pedal sensor High side |
| J1-11 | YEL/GRA | Throttle Position Ground | Ground | 0V | Pedal position potentiometer end 5K ohm | 0.014v key on | Drive Pedal sensor Low side |
| J1-12 | ORN/ GRN | Ignition Input Voltage | Analog voltage | B+ | System voltage | 12.25v key on | From key switch Ignition position |

| Pin ID | Wire Color | Pin Assignment | Signal | Nominal Voltage at Connector (when activated) | Load or Supply Characteristics | "Real World" Shop Measurements | Comments |
|---|---|---|---|---|---|---|---|
| J1-13 | | Not Used | | | | | |
| J1-14 | | Not Used | | | | | |
| J1-15 | | Not Used | | | | | |
| J1-16 | RED/BLK | Horn Switch | Digital voltage | 0V | Switch to ground | 12v open<br>0.002v closed | This circuit is for an optional foot operated switch for sounding the horn. |
| J1-17 | | Not Used | | | | | |
| J1-18 | BLK | Ground | Ground | 0V | Ground | 0.001v cranking | |
| J1-19 | GRN/ ORN | Hydraulic Fluid Temp | Variable resistance | 0.16 - 2.24V | Variable resistance to ground, 12-500 ohms | 2.406v at 76 Deg F. (24.4 Deg C.) | |
| J1-20 | BIO/WHT | Brake Pedal Switch | Digital voltage | 0V | Switch to ground | 0.04v at rest<br>11.9v pressed | Closes when brake pedal released |
| J1-21 | VIO/YEL | Solution Empty Switch | Digital voltage | 0V | Switch to ground | 0.004v empty<br>12.26v not empty | Ground or open, closes when tank is empty |
| J1-22 | WHT/ BRN | Start Inhibit | Low side driver | 0V | MOSFET gate on relay PCB assy. - 3 mA @12V | 9.2v cranking normal<br>0.015v inhibited | Ground or float |
| J1-23 | | Ground | | | | | |
| J1-24 | VIO/BRN | Start KEYPOS Switch | Digital voltage | B+ | System voltage | 11v cranking | From key switch |
| J1-25 | GRN/YEL | Check Engine Switch | Digital voltage | 0V | Engine Control Module low side output | 4.5v Eng. running | Switch to ground, |
| J1-26 | | Ground | | | | | |
| J1-27 | GRA/YEL | Recovery Full Switch | Digital voltage | 0V | Switch to ground | 0.004v empty<br>12.13v full | Level switch, ground or open, opens when tank is full |
| J1-28 | | Not Used | | | | | |
| J1-29 | | Not Used | | | | | |

| Pin ID | Wire Color | Pin Assignment | Signal | Nominal Voltage at Connector (when activated) | Load or Supply Characteristics | "Real World" Shop Measurements | Comments |
|---|---|---|---|---|---|---|---|
| J1-30 | VIO/BLU | Engine Coolant Temp | Analog voltage | 0.34 - 2.93 | Engine Control Module low side output | 1.59v at 132 Deg. F (56 Deg. C) | |
| J1-31 | ORN/GRA | Drive Pedal Sensor | Analog voltage | 0 - 5V | Pedal position potentiometer wiper 5K ohm | 0.919v Full FWD<br>0.449v Neutral<br>0.222v Full REV | Drive Pedal sensor wiper (0-5K ohm) |
| J1-32 | RED/YEL | Hydraulic Filter Switch | Digital voltage | 0V | Switch to ground | 11.7v key on | Ground or open, closed when filter plugged |
| J1-33 | BRN/BLU | Extend Scrub Level Switch | Digital voltage | 0V | Switch to ground | 11.7v key on | Ground or open, closed when tank is empty |
| J1-34 | YEL/WHT | Ignition Inhibit | Low side driver | 0V | MOSFET gate on relay PCB assy. - 3 mA@12V | 11.7v key on | Ground or float |
| J1-35 | | Not Used | | | | | |
| J2-1 | BLU/GRN | Main Power Relay | Low side driver | 0V | Relay coil - 0.29A @12V | 0.33v key on | 46 ± 5 ohms |
| J2-2 | BLK/WHT | Side Sweep/Scrub Solenoid (S8) | Low side driver | 0V | Hydraulic coil - 1.5A @12V | 11.9v Sol off<br>0.39v Sol. on | 8 ohms @ 20°C |
| J2-3 | GRN/VIO | Side Scrub Lift Solenoid | Low side driver | 0V | Hydraulic coil - 1.5A @12V | 11.9v Sol off<br>0.23v Sol on | 8 ohms @ 20°C |
| J2-4 | YEL/BLU | Scrub Lock Solenoid | Low side driver | 0V | Hydraulic coil - 1.5A @12V | 11.9v Sol. off<br>0.22v Sol. on | 8 ohms @ 20°C |
| J2-5 | RED/GRA | Squeegee Down Solenoid | Low side driver | 0V | Hydraulic coil - 1.5A @12V | 11.9v Sol. off<br>0.188v Sol. On | 8 ohms @ 20°C |
| J2-6 | BRN/GRN | Squeegee Up Solenoid | Low side driver | 0V | Hydraulic coil - 1.5A @12V | 14.6v Sol. off<br>0.213v Sol. on | 8 ohms @ 20°C |

| Pin ID | Wire Color | Pin Assignment | Signal | Nominal Voltage at Connector (when activated) | Load or Supply Characteristics | "Real World" Shop Measurements | Comments |
|---|---|---|---|---|---|---|---|
| J2-7 | ORN/BLU | Scrub Brush Solenoid | Low side driver | 0V | Hydraulic coil - 1.5A @12V | 14.6v Sol. off<br>0.25v Sol. on | 8 ohms @ 20°C |
| J2-8 | BRN/YEL | Vacuum Motor Solenoid | Low side driver | 0V | Hydraulic coil - 1.5A @12V | 14.1v Sol. off<br>0.2v Sol. on | 8 ohms @ 20°C |
| J2-9 | | Extended Scrub Water Solenoid | Low side driver | 0V | Solution solenoid - 1.5A @12V | | Not measured |
| J2-10 | BLU/YEL | Side Scrub Solution Solenoid | Low side driver | 0V | Solution solenoid - 1.0A @12V | 14.4v Sol. off<br>0.202v Sol. on | This was pulsed on momentarily. You may not see the change without a Min/Max function on your voltmeter. |
| J2-11 | BLU/BLK | Backup Audible Alarm | Low side driver | 0V | Electronic alarm 0.25A @12V | 14.4v off | |
| J2-12 | ORN | Circuit Breaker 4 (VACC4) | Power | 12 - 15 VDC | System voltage | 14.5v Eng. running | Power from circuit breaker 4 (20A) |
| J2-13 | WHT/ ORN | Glow Plug Relay | Low side driver | 0V | Relay coil - 0.29A @12V | Not measured | 46 ± 5 ohms |
| J2-14 | | Not Used | | | | | |
| J2-15 | | Not Used | | | | | |
| J2-16 | | Not Used | | | | | |
| J2-17 | BLK | Ground | Ground | 0V | Ground | -0.025v running | |
| J2-18 | BLK | Ground | Ground | 0V | Ground | -0.025v running | |
| J2-19 | | Not Used | | | | | |
| J2-20 | | Not Used | | | | | |
| J2-21 | | Not Used | | | | | |
| J2-22 | YEL/GRN | Main Solution Solenoid | Low side driver | 0V | Solution solenoid - 1.5A @12V | 12.9v Sol. Off<br>0.289v Sol. on | This was held on steady. |
| J2-23 | GRN/BRN | Circuit Breaker 5 (VACC5) | Power | 12 -1 5 VDC | System voltage | 14.52v Eng. running | Power from circuit breaker 5 (10A) |

| Pin ID | Wire Color | Pin Assignment | Signal | Nominal Voltage at Connector (when activated) | Load or Supply Characteristics | "Real World" Shop Measurements | Comments |
|---|---|---|---|---|---|---|---|
| J2-24 | ORN/RED | Scrub Pressure Up | Low side PWM driver | PWM 0 - 12V | Hydraulic coil - 2.1A @12V | 9.6v all 3 scrub pressure settings | Voltage moves slightly when changing pressure setting. |
| J2-25 | | Not Used | | | | | |
| J2-26 | WHT/VIO | Scrub Pressure Down | Low side PWM driver | PWM 0 - 12V | Hydraulic coil - 2.1A @12V | 9.9v @ 1<br>9.4v @ 2<br>9.0v @ 3 | 2.2 ohms @ 20°C |
| J2-27 | | Not Used | | | | | |
| J2-28 | | Not Used | | | | | |
| J2-29 | GRA/ ORN | ECM Engine 2200 RPM | High side driver | 12V | Engine Control Module input | 2.79v at idle<br>14.3v Mid<br>2.81v High | 12V for 2400 RPM, float otherwise |
| J2-30 | GRA/BLU | ECM Engine 2400 RPM | High side driver | 12V | Engine Control Module input | 2.79v at idle<br>2.79v Mid<br>14.3v high | 12V for 2200 RPM, float otherwise |
| J2-31 | YEL | Left Front Turn Lamp | High side driver | 12V | Incandescent lamp - 0.33A @12V | 0.004v off<br>12.3v on | 0.4A @14.5V (4W turn lamp) |
| J2-32 | GRN | Right Front Turn Lamp | High side driver | 12V | Incandescent lamp - 0.33A @12V | 0.004v off<br>12.3v on | 0.4A @14.5V (4W turn lamp) |
| J2-33 | ORN/BRN | Left Rear Stop/ Turn | High side driver | 12V | Incandescent lamp - 2.2A @12V | 0.004v off<br>12.3v on | 2.7A @14.5V (26W stop & turn lamp) |
| J2-34 | YEL/RED | Right Rear Stop/ Turn | High side driver | 12V | Incandescent lamp - 2.2A @12V | 0.004v off<br>12.3v on | 2.7A @14.5V (26W stop & turn lamp) |

| Pin ID | Wire Color | Pin Assignment | Signal | Nominal Voltage at Connector (when activated) | Load or Supply Characteristics | "Real World" Shop Measurements | Comments |
|---|---|---|---|---|---|---|---|
| J2-35 | GRA/ ORN | Extended Scrub Pump | Low side PWM driver | PWM 0 - 12V | Pump motor 11.5 FLA @ 12V, 46 LRA | Not Measured | 5KHz variable duty cycle |
| J3-1 | GRA/RED | Circuit Breaker 1 (VACC1) | Power | 12 - 15 VDC | System voltage | 12.4v key on | Power from circuit breaker 1 (20A) |
| J3-2 | GRN/BLU | Main Solution Pump | Low side PWM driver | PWM 0 - 12V | Pump motor 11.5 FLA @ 12V, 46 LRA | | 5KHz variable duty cycle |
| J3-3 | | Not Used | | | | | |
| J3-4 | BLU/BRN | Side Sweep Actuator - HI (Red Lead) | H-bridge driver | 12V | Actuator motor 20+/-2 FLA, 80 LRA (est.) | Not Measured | Bridge (switching power/ground) (+) for Down, otherwise open |
| J3-5 | WHT/ RED | Side Sweep Actuator - LO (Black Lead) | H-bridge driver | 0V | Actuator motor 20+/-2 FLA, 80 LRA (est.) | Not Measured | Bridge (switching power/ground) (-) for Up, otherwise open |
| J3-6 | | Not Used | | | | | |
| J3-7 | GRA/VIO | Side Sweep Actuator - MID (White, Common Lead) | H-bridge driver | B+ or 0V | Actuator motor 20+/-2 FLA, 80 LRA (est.) | Not Measured | Bridge (switching power/ground) (+) for Up, (-) for Down |
| J3-8 | BRN | Head / Tail Lamps | High side driver | 12V | Incandescent lamp - 9.3 @12V | 0.004v off<br>11.9v on | 11.3A @14.5V (2x 50W headlamp, 2x 5.6W tail lamp) |
| J3-9 | GRA/RED | Circuit Breaker 1 (VACC1) | Power | 12 - 15 VDC | System voltage | 12.4v key on | Power from circuit breaker 1 (20A) |
| J3-10 | | Not Used | | | | | |
| J3-11 | BLK | Ground | Ground | 0V | Ground | -0.06v Eng. running | |
| J3-12 | BLK | Ground | Ground | 0V | Ground | -0.03v Eng. running | |
| J3-13 | BLK | Ground | Ground | 0V | Ground | -0.19v Eng running | |

| Pin ID | Wire Color | Pin Assignment | Signal | Nominal Voltage at Connector (when activated) | Load or Supply Characteristics | "Real World" Shop Measurements | Comments |
|---|---|---|---|---|---|---|---|
| J3-14 | BLU | Circuit Breaker2 (VACC2) | Power | 12 - 15 VDC | System voltage | 12.7.v key on | Power from circuit breaker 2 (20A) |
| J3-15 | BLU | Circuit Breaker 2 (VACC2) | Power | 12 - 15 VDC | System voltage | 12.7v key on | Power from circuit breaker 2 (20A) |
| J3-16 | VI | Circuit Breaker 3 (VACC3) | Power | 12 - 15 VDC | System voltage | 12.7v key on | Power from circuit breaker 3 (15A) |
| J3-17 | WHT/YEL | Horn | Low side driver | 0V | Electromagnetic horn 4A @12V | 12.6v off<br>2.7v on | |
| J3-18 | YEL/BLK | Side Sweep Mist Pump | Low side driver | 0V | Pump motor 3.9 FLA @ 24V, 16 LRA | Not Measured | 24V pump operated at 12V |
| J3-19 | BLK/RED | Detergent Pump 2 (-) | H-bridge driver | 0 to B+ | 0.65A @ 12V | 0.16v to 14.5v | Pulsed on and off at a rate less than 10 Hz Normal scrub approx 0.2v. Burst of power scrub approx 10-14v |
| J3-20 | BLK/YEL | Detergent Pump 2 (+) | H-bridge driver | 0 to B+ | 0.65A @ 12V | 0.16v to 14.5v | Pulsed on and off at a rate less than 10 Hz. Burst of power scrub approx 10-14v |
| J3-21 | RED/BLU | Detergent Pump 1 (-) | H-bridge driver | 0 to B+ | 0.65A @ 12V | 0.16v to 14.5v | Pulsed on and off at a rate less than 10 Hz. Burst of power scrub approx 10-14v |
| J3-22 | RED/ WHT | Detergent Pump 1 (+) | H-bridge driver | 0 to B+ | 0.65A @ 12V | 0.16v to 14.5v | Pulsed on and off at a rate less than 10 Hz. Burst of power scrub approx 10-14v |
| J3-23 | BLU/RED | Wand Solution Pump | Low side driver | 0V | Pump motor 12.5 FLA@12V, 50 LRA | Not Measured | |

## *Shop Measurements - Relay PCB*

Shop measurement values can help you recognize “normal” values. The values in the table were measured on one propane engine model with the black voltmeter lead connected to battery negative and everything connected. The model had a right side scrub option with no side sweep.

| Pin ID | Wire Color | Pin Assignment | “Real World” Shop Measurements |
|---|---|---|---|
| J7-1 | VIO/GRA | B+ | 12.3v key on |
| J7-2 | BLU/PINK | Engine Start | 0.03v key on, 10.7v cranking |
| J7-3 | WHT/BRN | Start Inhibit | 0.2v key on, 8.8v cranking |
| J7-4 | BLK | Ground | 0.005 key on, 0.2v cranking |
| J7-5 | PINK | Engine Run | 12.3v key on, 11.2v cranking, 14.6v running |
| J7-6 | VIO/BRN | Start Key Pos | 0.2v key on, 11.2v cranking |
| J7-7 | YEL/WHT | Ignition Inhibit | 9.5v cranking, 9.9v key on, 10.6v running |
| J7-8 | ORN/GRN | Ignition Key Pos | 12.3v key on, 11v cranking, 14.6v running |

## *Wiring Diagram - GM Engine, Drawing #56111804-D*

| Item | Description |
|---|---|
| A2 | Gasoline Sensor, Ass'y |
| BT | Battery 12V |
| CB1 | Circuit Breaker, 20 Amp (lights) |
| CB2 | Circuit Breaker, 20 Amp |
| CB3 | Circuit Breaker, 15 Amp (actuator) |
| CB4 | Circuit Breaker, 20 Amp |
| CB5 | Circuit Breaker, 10 Amp |
| CB6 | Circuit Breaker, 15 Amp |
| F1 | Fuse, 100 Amp |
| H3 | Back-Up Alarm **(optional)** |
| H4 | Horn |
| K1 | Relay, Power |
| K2 | Relay, Run |
| K3 | Relay, Start |
| K4 | Relay, Glow Plugs |
| L1 | Vacuum Fan Valve, S1 |
| L2 | Squeegee Down Valve, S2 |
| L3 | Squeegee Up Valve, S3 |
| L4 | Scrub Brush Valve, S4 |
| L5 | Scrub Pressure Proportional Down Valve, S5 |
| L6 | Scrub Cylinder Lock Valve, S6 |
| L7 | Scrub Pressure Proportional Up Valve, S7 |
| L8 | Side Sweep/Scrub Valve, S8 |
| L9 | Side Scrub Lift Valve, S9 |
| L10 | Main Solution Valve |
| L11 | Right Solution Valve |
| LP1 | Headlight, Right |
| LP2 | Headlight, Left |
| LP3 | Lamp, Right Rear S/T/T |
| LP4 | Lamp, Left Rear S/T/T |
| LP5 | Lamp, Right Front Turn |
| LP6 | Lamp, Left Front Turn |
| LP7 | Beacon |

| Item | Description |
|---|---|
| M2 | Fuel Pump **(Gasoline/Petrol)** |
| M4 | Pump, Solution |
| M5 | Pump, Mist (optional) |
| M6 | Pump, Ext. Scrub (optional) |
| M7 | Actuator, Side Broom |
| M8 | Pump, Wand (optional) |
| M10 | Pump, Detergent 1 |
| M11 | Pump, Detergent 2 |
| R1 | Drive Pedal Sensor, 5K Ohm |
| R2 | Sender, Hydraulic Oil Temp |
| R3 | Sender, Fuel (Petrol and Diesel models only) |
| S1 | Switch, Ignition |
| S2 | Switch, Recovery Full |
| S3 | Switch, Solution Empty |
| S4 | Switch, Hydraulic Filter |
| S5 | Switch, Low LP Pressure (LPG only) |
| S6 | Switch, Brake |
| S7 | Switch, Extended Scrub |
| S29 | Switch, Push Button, Horn |
| S30 | Switch, Seat |

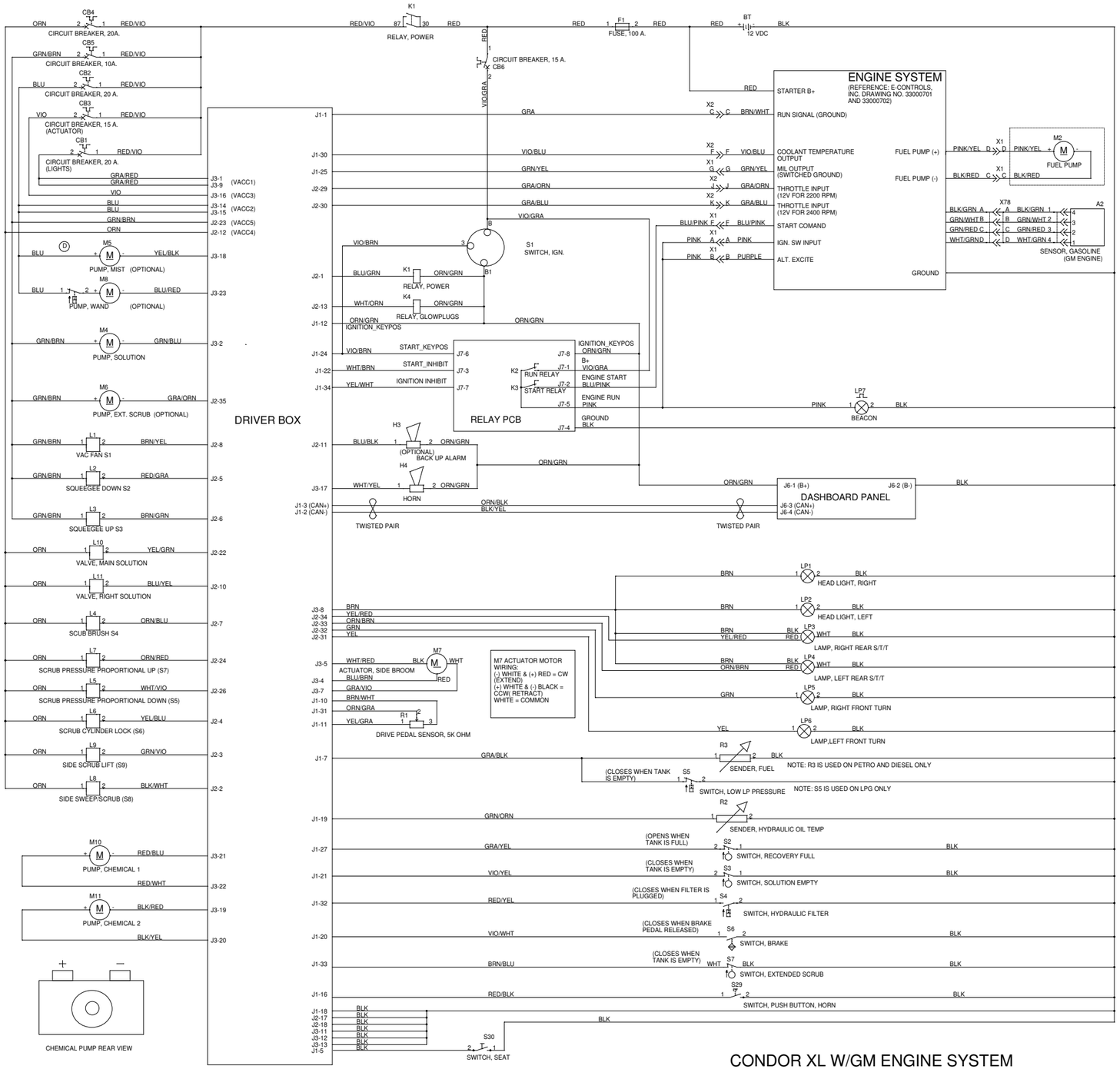

## *Wiring Diagram - Kubota Diesel, Drawing #56111804-D*

| Item | Description |
|---|---|
| A5 | APECS 3000 Governor |
| BT | Battery 12V |
| CB1 | Circuit Breaker, 20 Amp (lights) |
| CB2 | Circuit Breaker, 20 Amp |
| CB3 | Circuit Breaker, 15 Amp (actuator) |
| CB4 | Circuit Breaker, 20 Amp |
| CB5 | Circuit Breaker, 10 Amp |
| CB6 | Circuit Breaker, 15 Amp |
| D2 | Diode |
| D3 | Diode |
| E1 | Glow Plug |
| E2 | Glow Plug |
| E3 | Glow Plug |
| E4 | Glow Plug |
| F1 | Fuse, 100 Amp |
| G2 | Alternator |
| H3 | Back-Up Alarm **(optional)** |
| H4 | Horn |
| K1 | Relay, Power |
| K2 | Relay, Run |
| K3 | Relay, Start |
| K4 | Relay, Glow Plugs |
| L1 | Vacuum Fan Valve, S1 |
| L2 | Squeegee Down Valve, S2 |
| L3 | Squeegee Up Valve, S3 |
| L4 | Scrub Brush Valve, S4 |
| L5 | Scrub Pressure Proportional Down Valve, S5 |
| L6 | Scrub Cylinder Lock Valve, S6 |
| L7 | Scrub Pressure Proportional Up Valve, S7 |
| L8 | Side Sweep/Scrub Valve, S8 |
| L9 | Side Scrub Lift Valve, S9 |
| L10 | Main Solution Valve |
| L11 | Right Solution Valve |
| LP1 | Headlight, Right |
| LP2 | Headlight, Left |
| LP3 | Lamp, Right Rear S/T/T |
| LP4 | Lamp, Left Rear S/T/T |
| LP5 | Lamp, Right Front Turn |
| LP6 | Lamp, Left Front Turn |
| LP7 | Beacon |

| Item | Description |
|---|---|
| M3 | Starter |
| M4 | Pump, Solution |
| M5 | Pump, Mist (optional) |
| M6 | Pump, Ext. Scrub (optional) |
| M7 | Actuator, Side Broom |
| M8 | Pump, Wand (optional) |
| M10 | Pump, Detergent 1 |
| M11 | Pump, Detergent 2 |
| M14 | Fuel Pump |
| R1 | Drive Pedal Sensor, 5K Ohm |
| R2 | Sender, Hydraulic Oil Temp |
| R3 | Sender, Fuel |
| S1 | Switch, Ignition |
| S2 | Switch, Recovery Full |
| S3 | Switch, Solution Empty |
| S4 | Switch, Hydraulic Filter |
| S6 | Switch, Brake |
| S7 | Switch, Extended Scrub |
| S9 | Switch, Coolant Temp. |
| S28 | Switch, Oil Pressure |
| S29 | Switch, Push Button, Horn |
| S30 | Switch, Seat |

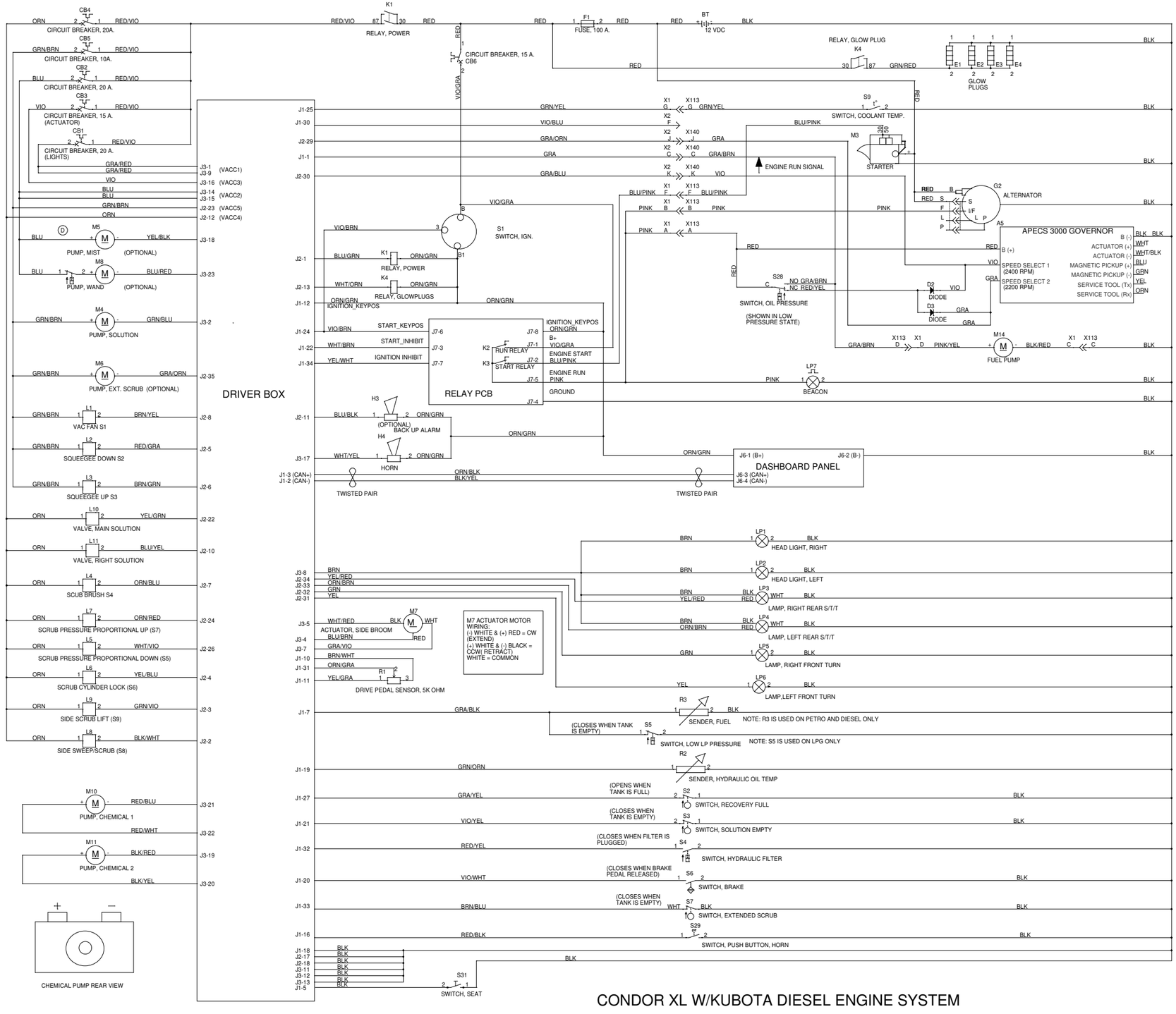


CONDOR XL W/KUBOTA DIESEL ENGINE SYSTEM

## Wiring Schematic - 1 of 2

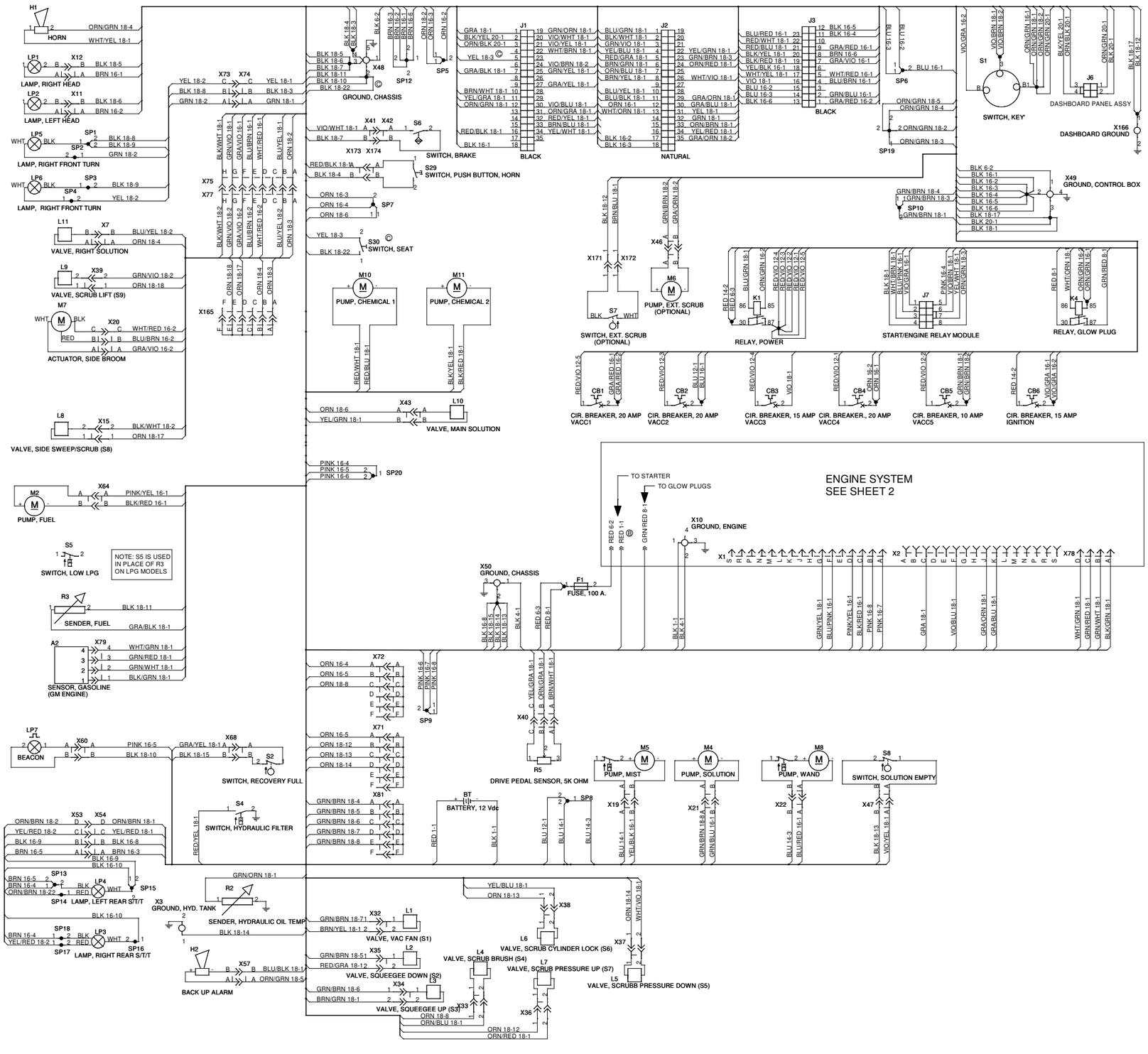

## *Wiring Schematic - 2 of 2*

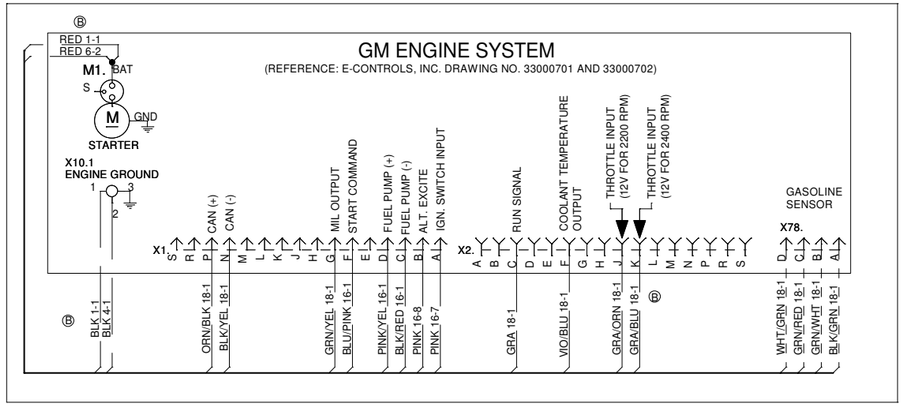


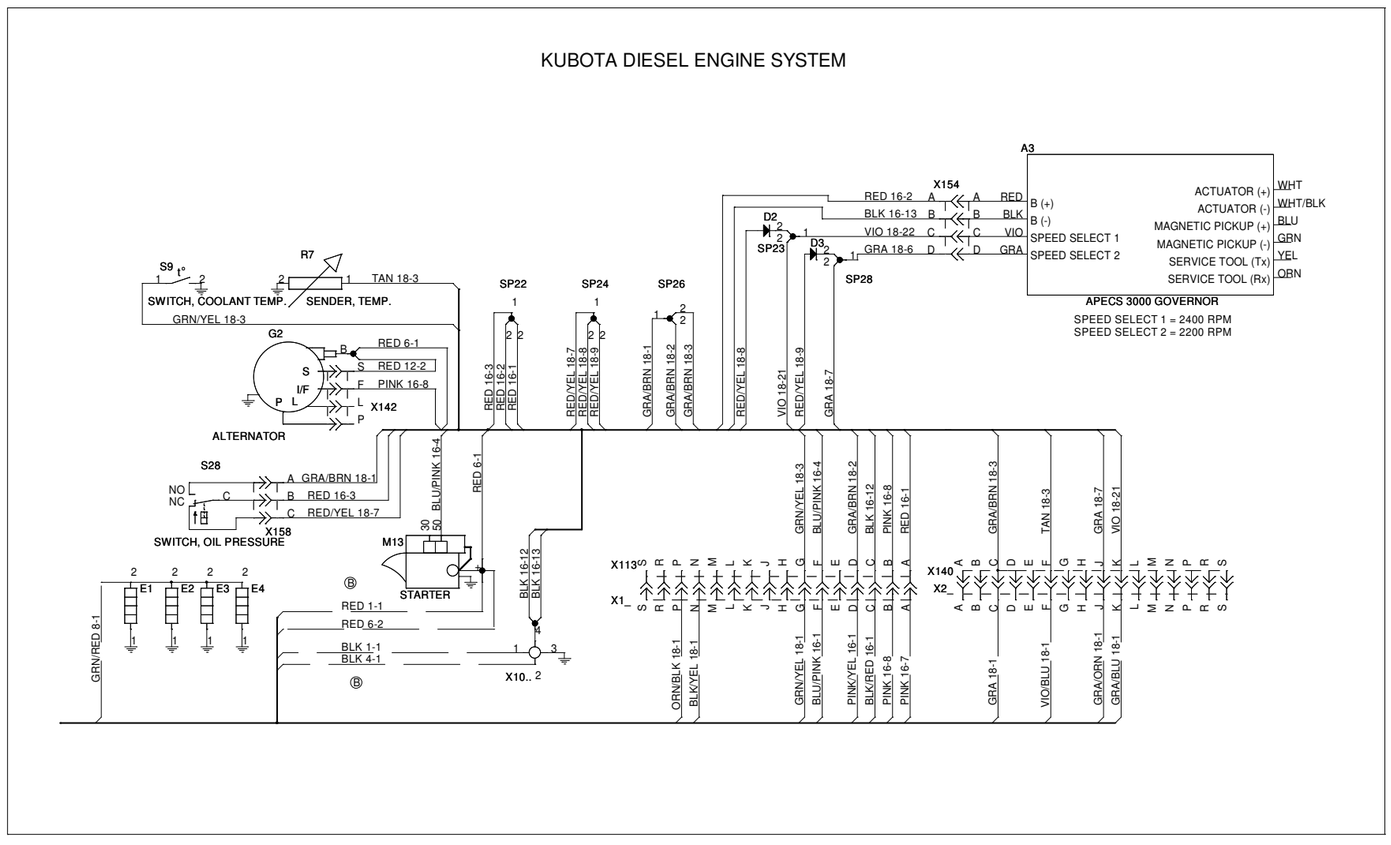

# *Engine Harness for Tier II GM 1.6L Gas (Petrol)*

## *(Prior to 2/25/2011 with serial number below 1000043742)*

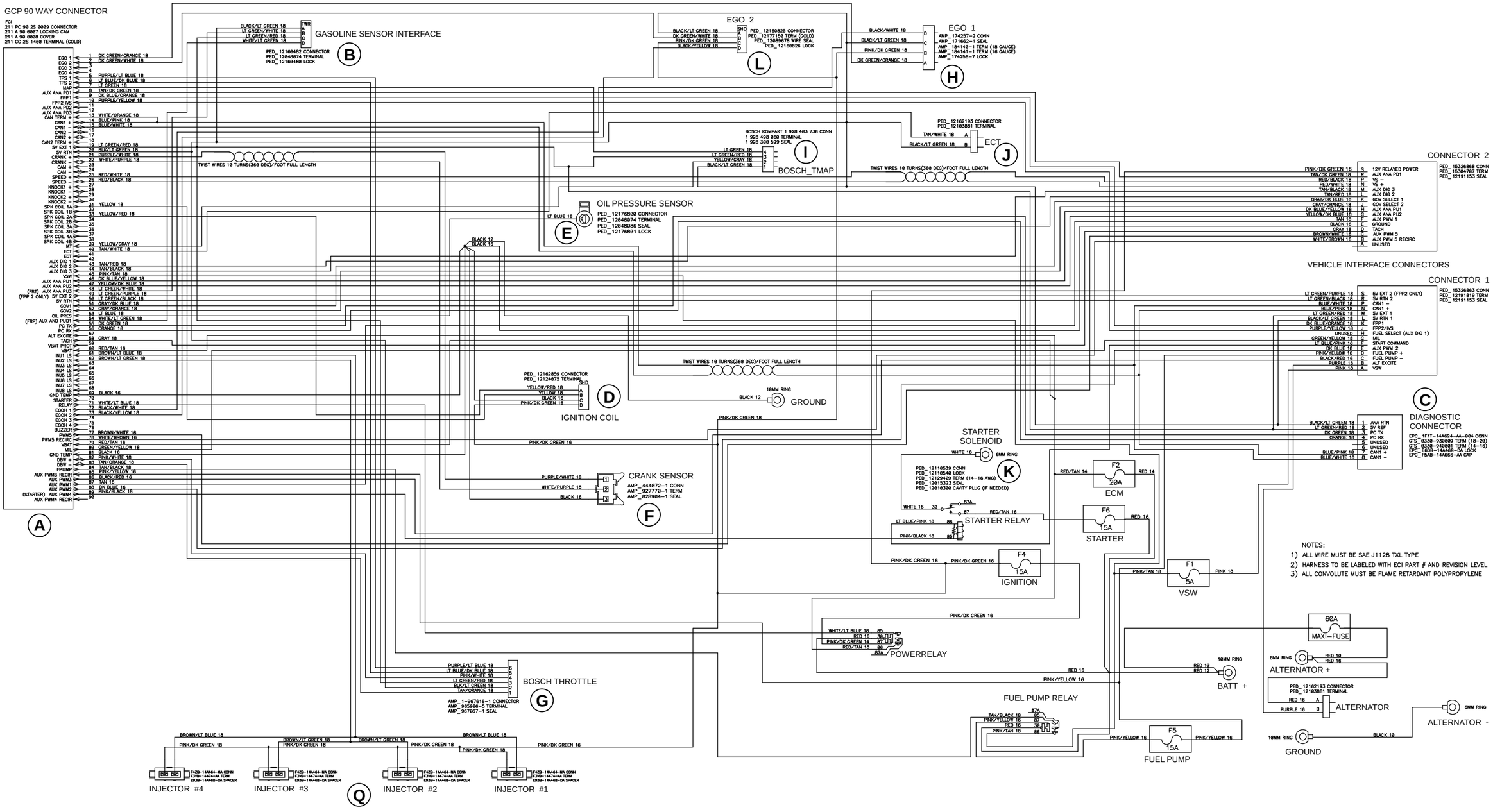

# *Engine Harness for Tier II GM 1.6L LPG*

## *(Prior to 4/15/2010 with serial number below 1000038143)*

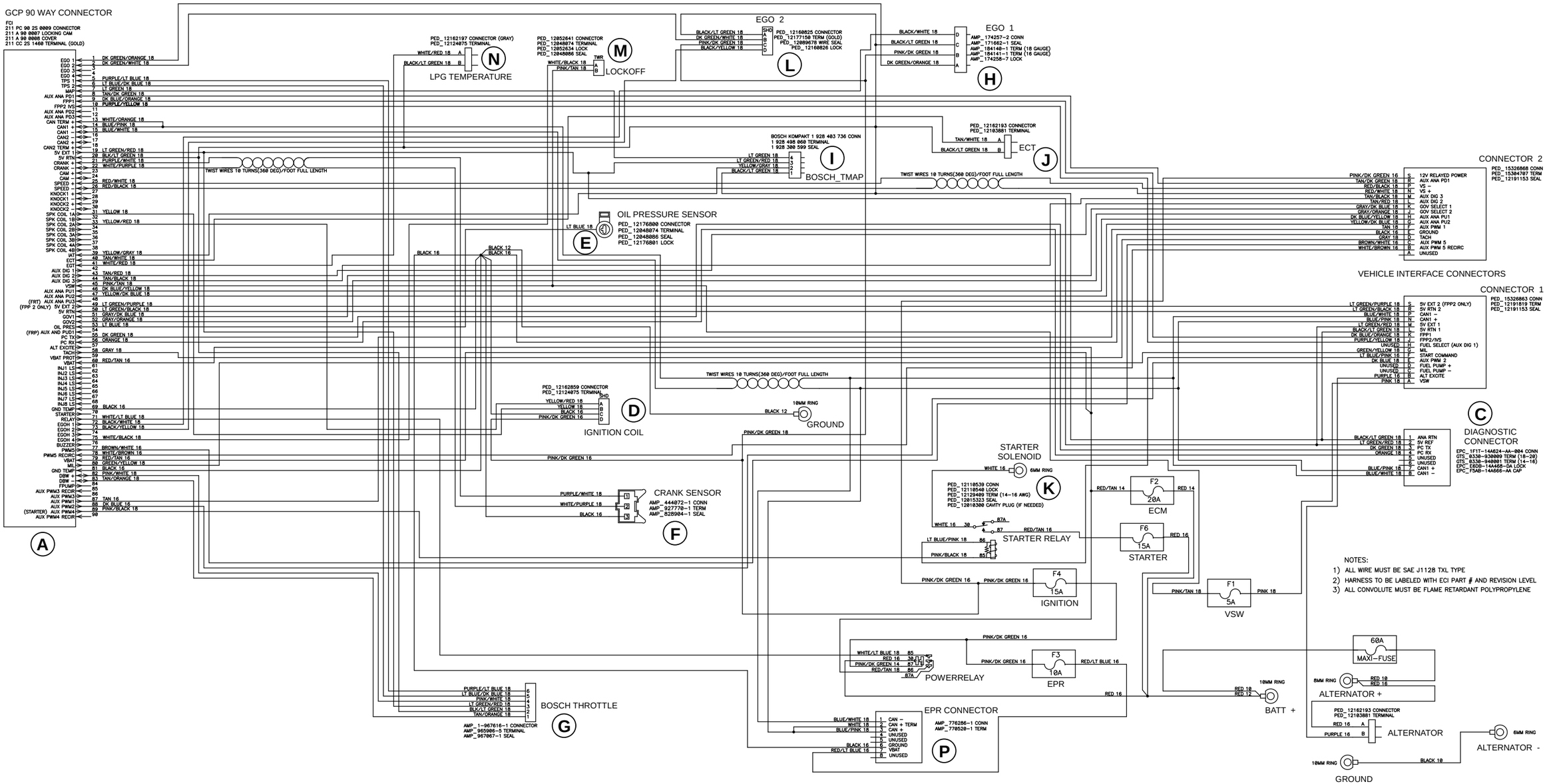

# *Engine Harness for Tier III GM 1.6L Gas (Petrol)*

## *(After 2/25/2011 beginning with serial number 1000043742)*

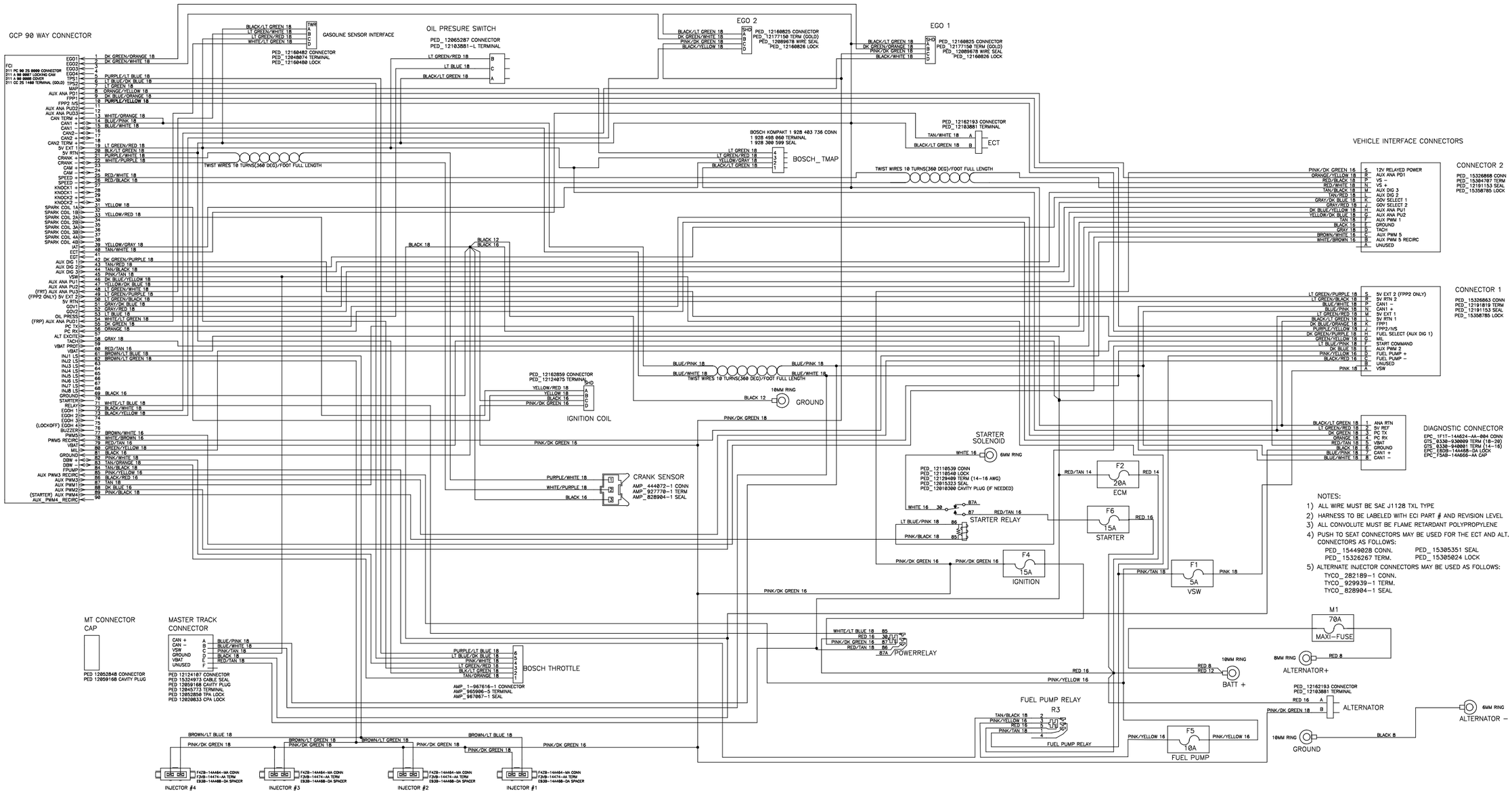

# *Engine Harness for Tier III GM 1.6L LPG*

## *(After 2/25/2011 beginning with serial number 1000038143)*

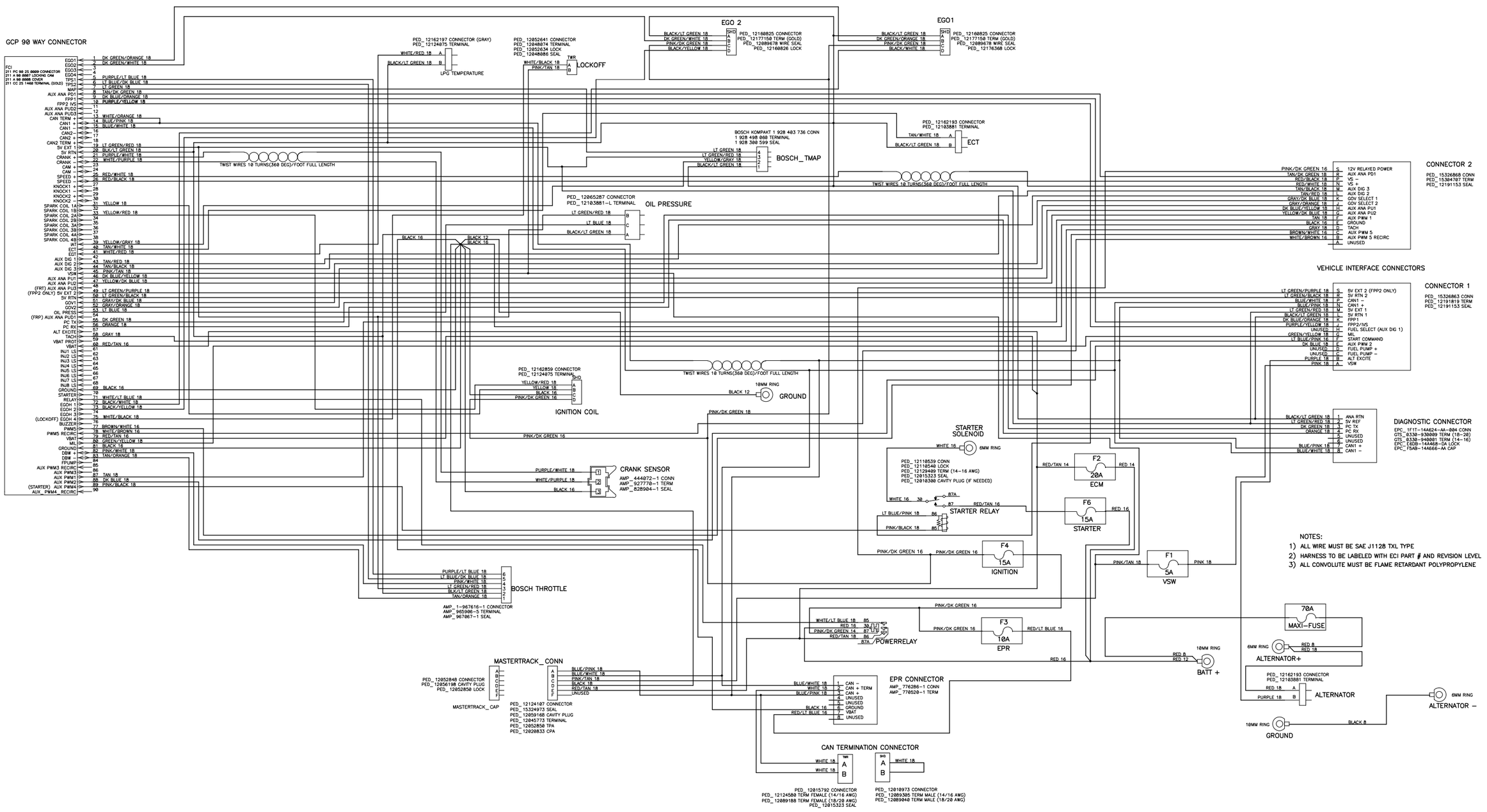

| Wiring Harness Item | Wiring Harness Component Description |
|---|---|
| A | ECM Wiring Connector (90 Pins) |
| B | Gasoline/Petrol Fuel Sensor Interface Connector (fuel pressure regulation and temperature sensor manifold assembly) |
| C | Engine Diagnostic Communication Port (8 Pin) (MIL shorting location) |
| D | Ignition Coil Pack Wiring Connector |
| E | Engine Oil Pressure Switch |
| F | Crankshaft Position Sensor Connector |
| G | Throttle Fly Actuator Motor Connector (Bosch) |
| H | EGO #1 Sensor Wiring Connector |
| I | Combined TMAP Engine Air Temperature and MAP Sensor Wiring Connector |
| J | Engine Coolant Temperature (ECT) Sensor Connector |
| K | Engine Starter Solenoid Wire Connector |
| L | EGO #2 Sensor Wiring Connector |
| M | LPG Fuel Lockoff Wiring Connector |
| N | LPG Temp Sensor Wiring Connector |
| P | EPR Connector (LPG) Fuel Regulator |
| Q | Gasoline Fuel Injectors |

Definition of Terms for Computerized Engine Controllers

- ANA-RTN:
- ECM: Engine Control Module
- EGO: Exhaust Gas Oxygen Sensor (O2)
- EPR: Electronic Pressure Regulator
- IAT: Intake Manifold Air Temperature
- MAP: Intake Manifold Absolute Pressure
- MIL: Malfunction Indicator Light
- VSW: Switched Battery Voltage
- VBAT: Battery Voltage

| | | | |
|---|---|---|---|
| EGO 1 | 1 | DK GREEN/ORANGE 18 | |
| EGO 2 | 2 | DK GREEN/ORANGE 18 | |
| EGO 3 | 3 | | |
| EGO 4 | 4 | | |
| TPS 1 | 5 | PURPLE/LT BLUE 18 | |
| TPS 2 | 6 | LT BLUE/DK BLUE 18 | |
| MAP | 7 | LT GREEN 18 | |
| AUX ANA PD1 | 8 | TAN/DK GREEN 18 | |
| FPP1 | 9 | DK BLUE/ORANGE 18 | |
| FPP2 IVS | 10 | PURPLE/YELLOW 18 | |
| AUX ANA PD2 | 11 | | |
| AUX ANA PD3 | 12 | | |
| CAN TERM + | 13 | WHITE/ORANGE 18 | |
| CAN1 + | 14 | BLUE/PINK 18 | |
| CAN1 - | 15 | BLUE/WHITE 18 | |
| CAN2 - | 16 | | |
| CAN2 + | 17 | | |
| CAN2 TERM + | 18 | | |
| 5V EXT 1 | 19 | LT GREEN/RED 18 | |
| 5V RTN | 20 | BLK/LT GREEN 18 | |
| CRANK + | 21 | PURPLE/WHITE 18 | |
| CRANK - | 22 | WHITE/PURPLE 18 | |
| CAM + | 23 | | |
| CAM - | 24 | | |
| SPEED + | 25 | RED/WHITE 18 | |
| SPEED - | 26 | RED/BLACK 18 | |
| KNOCK1 + | 27 | | |
| KNOCK1 - | 28 | | |
| KNOCK2 + | 29 | | |
| KNOCK2 - | 30 | | |
| SPK COIL 1A | 31 | YELLOW 18 | |
| SPK COIL 1B | 32 | | |
| SPK COIL 2A | 33 | YELLOW/RED 18 | |
| SPK COIL 2B | 34 | | |
| SPK COIL 3A | 35 | | |
| SPK COIL 3B | 36 | | |
| SPK COIL 4A | 37 | | |
| SPK COIL 4B | 38 | | |
| IAT | 39 | YELLOW/GRAY 18 | |
| ECT | 40 | TAN/WHITE 18 | |
| EGT | 41 | | |
| AUX DIG 1 | 42 | | |
| AUX DIG 2 | 43 | TAN/RED 18 | |
| AUX DIG 3 | 44 | TAN/BLACK 18 | |
| VSW | 45 | PINK/TAN 18 | |
| AUX ANA PU1 | 46 | DK BLUE/YELLOW 18 | |
| AUX ANA PU2 | 47 | YELLOW/DK BLUE 18 | |
| (FRT) AUX ANA PU3 | 48 | LT GREEN/WHITE 18 | |
| (FPP 2 ONLY) 5V EXT 2 | 49 | LT GREEN/PURPLE 18 | |
| 5V RTN | 50 | LT GREEN/BLACK 18 | |
| GOV1 | 51 | GRAY/DK BLUE 18 | |
| GOV2 | 52 | GRAY/ORANGE 18 | |
| OIL PRES | 53 | LT BLUE 18 | |
| (FRP) AUX AND PUD1 | 54 | WHITE/LT GREEN 18 | |
| PC TX | 55 | DK GREEN 18 | |
| PC RX | 56 | ORANGE 18 | |
| ALT EXCITE | 57 | | |
| TACH | 58 | GRAY 18 | |
| VBAT PROT | 59 | | |
| VBAT | 60 | RED/TAN 16 | |
| INJ1 LS | 61 | BROWN/LT BLUE 18 | |
| INJ2 LS | 62 | BROWN/LT GREEN 18 | |
| INJ3 LS | 63 | | |
| INJ4 LS | 64 | | |
| INJ5 LS | 65 | | |
| INJ6 LS | 66 | | |
| INJ7 LS | 67 | | |
| INJ8 LS | 68 | | |
| GND TEMP | 69 | BLACK 16 | |
| STARTER | 70 | | |
| RELAY | 71 | WHITE/LT BLUE 18 | |
| EGOH 1 | 72 | BLACK/WHITE 18 | |
| EGOH 2 | 73 | BLACK/YELLOW 18 | |
| EGOH 3 | 74 | | |
| EGOH 4 | 75 | | |
| BUZZER | 76 | | |
| PWM5 | 77 | BROWN/WHITE 16 | |
| PWM5 RECIRC | 78 | WHITE/BROWN 16 | |
| VBAT | 79 | RED/TAN 16 | |
| MIL | 80 | GREEN/YELLOW 18 | |
| GND TEMP | 81 | BLACK 16 | |
| DBW + | 82 | PINK/WHITE 18 | |
| DBW - | 83 | TAN/ORANGE 18 | |
| FPUMP | 84 | TAN/BLACK 18 | |
| AUX PWM3 RECIR | 85 | PINK/YELLOW 16 | |
| AUX PWM3 | 86 | BLACK/RED 16 | |
| AUX PWM1 | 87 | TAN 16 | |
| AUX PWM2 | 88 | DK BLUE 16 | |
| (STARTER) AUX PWM4 | 89 | PINK/BLACK 18 | |
| AUX PWM4 RECIR | 90 | | |

## ECM Detail

### ECM Harness Connectors

### Machine Harness Connectors

#### CONNECTOR 2

| | | | | |
|---|---|---|---|---|
| PINK/DK GREEN 16 | S | 12V RELAYED POWER | | |
| TAN/DK GREEN 18 | R | AUX ANA PD1 | | |
| RED/BLACK 18 | P | VS - | | |
| RED/WHITE 18 | N | VS + | THROTTLE INPUT (12V FOR 2400 RPM) | N |
| TAN/BLACK 18 | M | AUX DIG 3 | | M |
| TAN/RED 18 | L | AUX DIG 2 | | L |
| GRAY/DK BLUE 18 | K | GOV SELECT 1 | | K GRA/BLU J2-30 |
| GRAY/ORANGE 18 | J | GOV SELECT 2 | THROTTLE INPUT (12V FOR 2200 RPM) | J GRA/ORN J2-29 |
| DK BLUE/YELLOW 18 | H | AUX ANA PU1 | | H |
| YELLOW/DK BLUE 18 | G | AUX ANA PU2 | | G |
| TAN 18 | F | AUX PWM 1 | COOLANT TEMP. OUTPUT | F VIO/BLU J1-30 |
| BLACK 16 | E | GROUND | | E |
| GRAY 18 | D | TACH | | D |
| BROWN/WHITE 16 | C | AUX PWM 5 | RUN SIGNAL (GROUND) | C GRA J1-1 |
| WHITE/BROWN 16 | B | AUX PWM 5 RECIRC | | B |
| | A | UNUSED | | A |

#### X2

S R P N M L K J H G F E D C B A

#### CONNECTOR 1

| | | | | |
|---|---|---|---|---|
| LT GREEN/PURPLE 18 | S | 5V EXT 2 (FPP2 ONLY) | | |
| LT GREEN/BLACK 18 | R | 5V RTN 2 | | |
| BLUE/WHITE 18 | P | CAN1 - | CAN1 (-) | P |
| BLUE/PINK 18 | N | CAN1 + | CAN1 (+) | N |
| LT GREEN/RED 18 | M | 5V EXT 1 | | M |
| BLACK/LT GREEN 18 | L | 5V RTN 1 | | L |
| DK BLUE/ORANGE 18 | K | FPP1 | | K |
| PURPLE/YELLOW 18 | J | FPP2/IVS | | J |
| UNUSED | H | FUEL SELECT (AUX DIG 1) | | H |
| GREEN/YELLOW 18 | G | MIL | MIL OUTPUT | G GRN/YEL 18-1 |
| LT BLUE/PINK 16 | F | START COMMAND | START COMMAND | F BLU/PINK 16-1 |
| DK BLUE 18 | E | AUX PWM 2 | | E |
| PINK/YELLOW 16 | D | FUEL PUMP + | FUEL PUMP (+) | D PINK/YEL 16-1 |
| BLACK/RED 16 | C | FUEL PUMP - | FUEL PUMP (-) | C BLK/RED 16-1 |
| PURPLE 16 | B | ALT EXCITE | ALT. EXCITE | B PINK 16-7 |
| PINK 18 | A | VSW | IGN. SWITCH INPUT | A PINK 16-4 |

#### X1

S R P N M L K J H G F E D C B A

#### GASOLINE SENSOR INTERFACE

(GASOLINE MODELS ONLY)

| | | | |
|---|---|---|---|
| WHITE/LT GREEN 18 | D | D | WHT/GRN 18-1 |
| LT GREEN/RED 18 | C | C | GRN/RED 18-1 |
| LT GREEN/WHITE 18 | B | B | GRN/WHT 18-1 |
| BLACK/LT GREEN 18 | A | A | BLK/GRN 18-1 |

#### X78

#### DIAGNOSTIC CONNECTOR

| | | |
|---|---|---|
| BLACK/LT GREEN 18 | 1 | ANA RTN |
| LT GREEN/RED 18 | 2 | 5V REF |
| DK GREEN 18 | 3 | PC TX |
| ORANGE 18 | 4 | PC RX |
| | 5 | UNUSED |
| | 6 | UNUSED |
| BLUE/PINK 18 | 7 | CAN1 + |
| BLUE/WHITE 18 | 8 | CAN1 - |

# Engine System, Diesel

## Functional Description

### Overview

The diesel Condor XL/Nilfisk ER 1300/1600 machines use a Kubota V1505-B-1 four-cylinder diesel engine to power the two hydraulic pumps that run the machine drive wheel, scrub/sweep systems, vacuum fan motor, the scrub/sweep and squeegee lift actuators and the steering system. A Woodward APECS 3000 Governor controls the fuel quantity to maintain the selected RPM or shut the engine off.

### Diesel Engine Starter Circuit Diagram

**ENGINE START/RUN RELAY PCB J7 for Diesel**

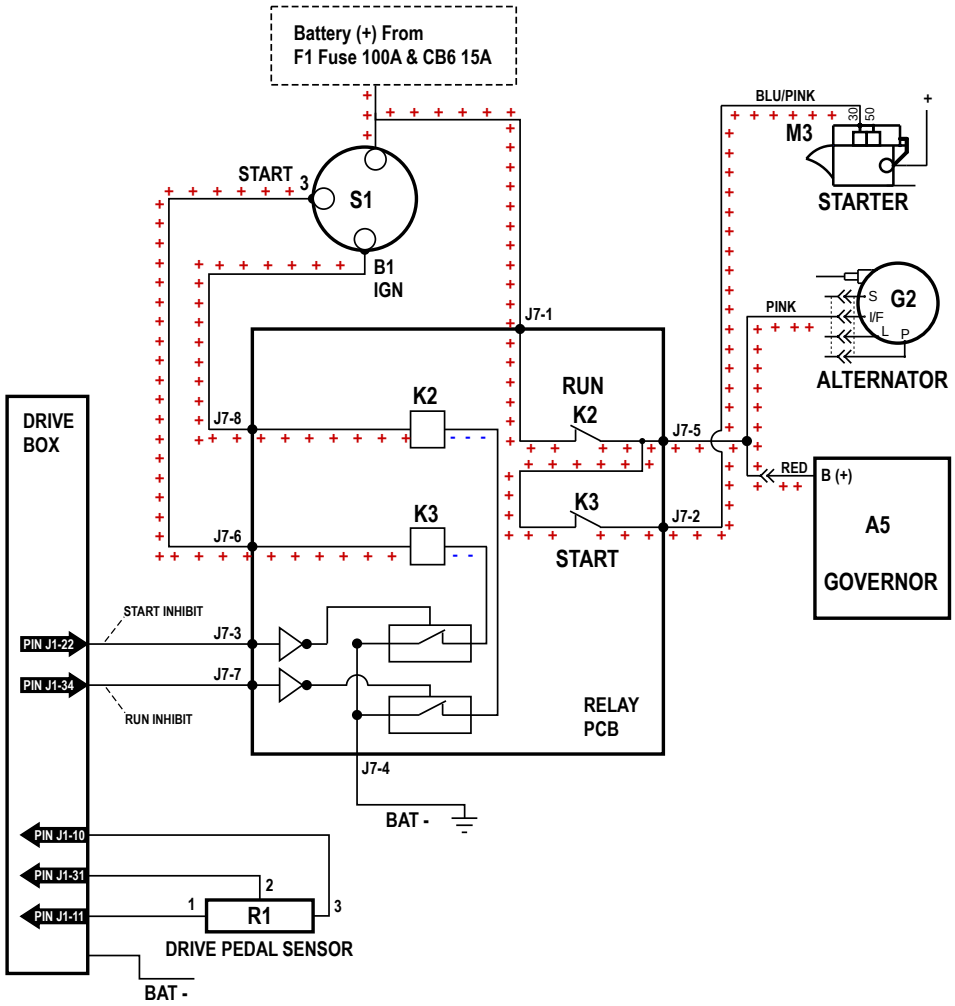

## *Circuit Description*

- For the engine to start:
  - The **Key Switch S1** must be set to provide positive voltage to the **Glow Plug Relay K4**, and to the **Relay PCB** to actuate the engine **Start Relay** and **Run Relay** contacts.
  - The **Start_Inhibit** relay must not be energized. This means that the **Driver Box** is not providing a ground to the coil through **J1-22**.
  - The drive pedal must be in the neutral position and the **Drive Pedal Sensor** must be in the deadband range.
- For the engine to run:
  - The **Ignition_Inhibit** relay must not be energized. This means that the **Driver Box** is not providing a ground to the coil through **J1-34**.
  - The **Oil Pressure Switch S28** must be open. This switch is a single-pole, double-throw (SPDT) switch. When the oil pressure is too low, the switch is in the inactivated state (normally-closed contact is closed). When there is oil pressure, the switch activates so that the normally-open contact will be closed. The pressure switch is set at 10 psi.
  - The **Coolant Temperature Switch S9** must be open. This switch is normally open, and will close when the coolant temperature reaches 235 degrees F. When the switch closes, it provides a ground to pin **J1-25** on the **Driver Box**.

# Component Locations

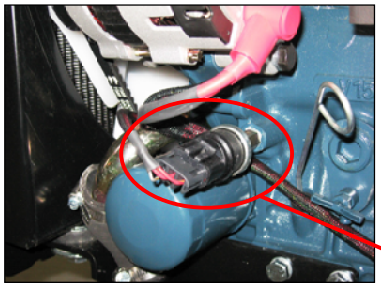

Oil Pressure Sensor
(above oil filter)



Engine Ground Connection



Coolant Temperature Sensor
(above alternator)

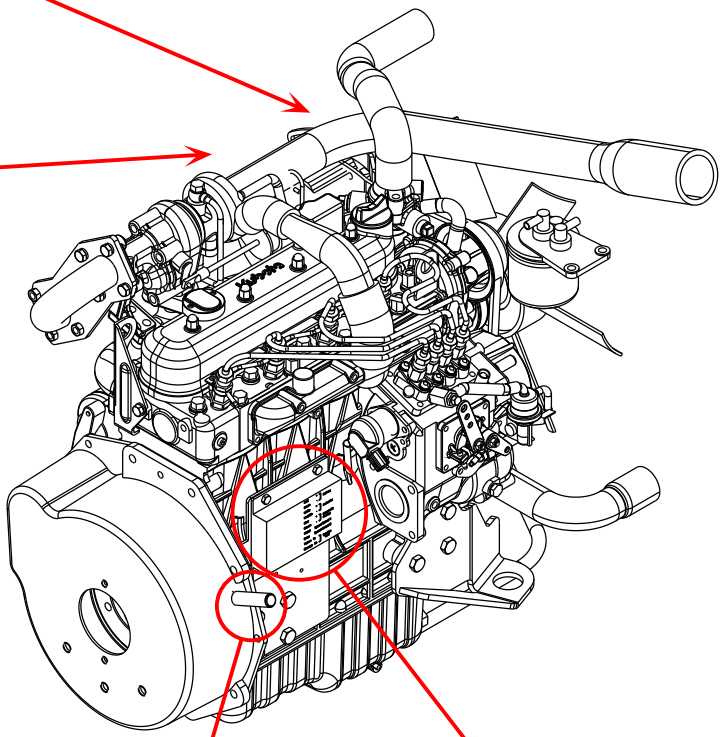



X1 and X2 Electrical Connectors

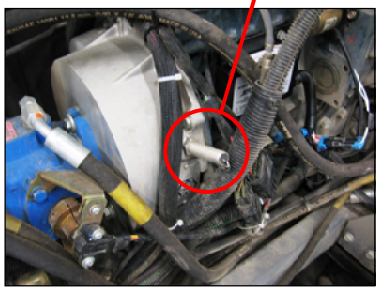

Governor Engine Speed
Magnetic Pickup



Woodward Governor and
Throttle Actuator

# Maintenance and Adjustments

***Warning! Before performing any machine maintenance or adjustments, make sure the key switch is off, the key is removed from the machine and the parking brake is engaged.***

## Engine Oil

Check the engine oil level when the machine is parked on a level surface and the engine is cool. Change the engine oil after the first 35 hours of operation and every 150 hours after that. Use CF, CF-4 or CG-4 oil meeting API specifications and suited temperatures.

* **Important:** Refer to the **Diesel Lubricating Oil Note** below for further diesel oil recommendations. Refer to the engine manufacturer's service manuals for oil capacities and additional engine specifications. Replace the oil filter with every oil change.

| Temperature Range | Oil Weight |
|---|---|
| Above 77 °F (25 °C) | SAE 30 or 10W-30 |
| 32 °F to 77 °F (0 °C to 25 °C) | SAE 20 or 10W-30 |
| Below 32 °F (0 °C) | SAE 10W or 10W-30 |

* **Diesel Lubricating Oil Note:**

With the emission control now in effect, the CF-4 and CG-4 lubricating oils have been developed for use with a low-sulfur fuel used in on-road vehicle engines. When an off-road vehicle engine runs on a high-sulfur fuel, it is advisable to employ the CF, CD or CE lubricating oil with a high total base number. If the CF-4 or CG-4 lubricating oil is used with a high-sulfur fuel, change the lubricating oil at shorter intervals.

| Fuel / Lubricating Oil class | Low sulfur (0.5 % ≥) | High sulfur | Remarks |
|---|---|---|---|
| CF | O | O | TBN ≥ 10 |
| CF-4 | O | X | |
| CG-4 | O | X | |

O = Recommended X = Not Recommended

## Engine Coolant

### Checking Engine Coolant

***Caution! Do not remove the radiator cap when the engine is hot.***

To check the engine coolant level, open and prop the engine cover and observe the coolant level in the coolant overflow tank. If the level is low, add a 50/50 mix of water and the recommended type antifreeze. Clean the radiator and oil cooler exteriors every 150 hours by washing with low-pressure water or using compressed air.

***Service Note:*** *The oil cooler tips out for easy cleaning.*

### *Replacing Engine Coolant*

One possible cause of engine overheating is trapped air in the cooling system. It's recommended that you use a Cooling System Tool when changing the engine coolant. The Cooling System Tool pulls a vacuum on the cooling system prior to filling to prevent air from being trapped in the cooling system.

Note that there are several types of Cooling System Tools. The following instructions describe how to use a typical type of tool. Refer to the operating instructions included with your particular tool if different than the example shown here.

1. Connect a **Compressed Air Supply Line** to the fitting on the Cooling System Tool.
2. Connect the **Coolant Supply Line** to the Cooling System Tool. Make sure the **Coolant Valve** is closed.
3. Insert and hold the Cooling System Tool onto the radiator filler neck, then press the **Air Switch**. The compressed air travelling through the **Venturi Tube Assembly** will pull a vacuum on the cooling system to remove air from the system.
4. Once the vacuum reading on the **Gauge** reaches approximately 25 on the green scale, release the **Air Switch**. Note that this also a good opportunity to check for cooling system leaks,
5. Continue to hold the Cooling System Tool onto the radiator filler neck and open the **Coolant Valve** to allow coolant to flow into the radiator.
6. Once the pressure on the **Gauge** reaches approximately 5 on the red scale and the radiator is almost full, shut off the **Coolant Valve** and remove the Cooling System Tool from the radiator filler neck.
7. Top off the radiator and overflow tank as necessary.

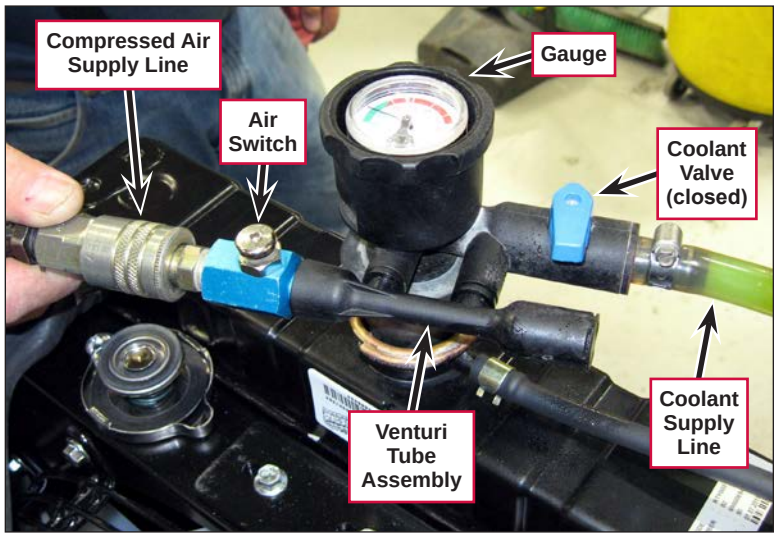


**Removing the Air from the Cooling System with Cooling System Tool**

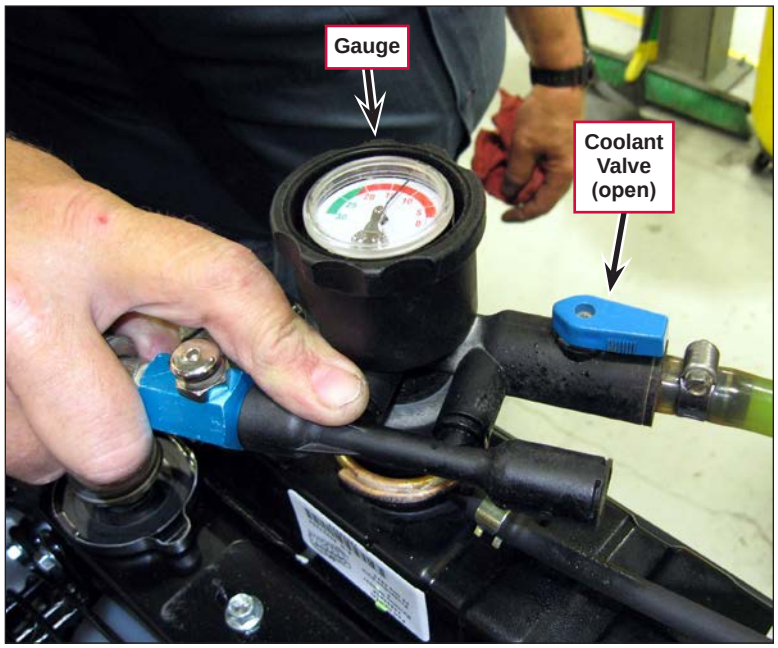


**Filling Cooling System with Coolant**

## Engine Air Filter Maintenance

Check the **Engine Air Filter Service Indicator** before each use of the machine. Do not service the air filter unless the red flag is visible in the service indicator.

***Caution!*** ***When servicing the engine air filter elements, use extreme care to prevent loose dust from entering the engine. Dust can severely damage the engine.***

The engine air filter contains a primary (outer) and a safety (inner) filter element. The primary element can be cleaned twice before being replaced.

The safety element should be replaced every third time that the primary filter element is replaced. Never attempt to clean the inner safety element.

To clean the primary filter element:

1. Un-snap the two clips at the end of the air filter and remove the end housing.
2. Pull the primary element out.
3. Clean the element with compressed air (maximum pressure 100 psi) or wash it with water (maximum pressure 40 psi). **Do not** put the element back into the canister until it is completely dry.

# Troubleshooting

## General Troubleshooting

| Problem | Cause | Correction |
|---|---|---|
| The yellow attention light and glow plug display icon will not go out. | Glow plug relay K4 coil over current (fault code 14 displayed on the LCD) | • Check K4 relay coil wiring for problems (+ ORN/GRN and - WHT/ORN).<br>• Check coil resistance. If less than 36 ohms, replace. Also see diesel glow plug starting circuit electrical ladder detail. |
| All machine systems shut down. | Coolant temperature high (fault code 33 displayed on the LCD). | Refer to the ***Engine Overheating Problems*** section below. |
| | The oil pressure has dropped to 3-7 psi (fault code 37 displayed on the LCD). | Refer to the ***Loss of Oil Pressure Protection*** section below. |
| | General engine fault; engine temperature is too high, the oil pressure is low (fault code 38 displayed on the LCD). | • Refer to the ***Engine Overheating Problems*** section below.<br>• Refer to the ***Loss of Oil Pressure Protection*** section below. |

## Engine Overheating Problems

Use the checklist below as a guide to thoroughly check the engine cooling system.

- Check the coolant level in the overflow tank and radiator.
- Inspect and clean the radiator and hydraulic oil cooler.

- Check for correct operation of the belt-driven engine cooling fan (slippage).
- Check to see that the engine thermostat opens.
- Check for correct water pump operation.
- Check the engine crankcase oil level.
- Check for air trapped in the cooling system. (Refer to the ***Engine Coolant/Replacing Engine Coolant*** section.)

## Loss of Oil Pressure Protection

The engine will shut down if the oil pressure drops to 3-7 psi. Check for possible causes for low oil pressure such as:

- Engine crankcase oil level is low.
- Incorrect oil viscosity.
- Fault in oil pressure switch S28.
- Excessive engine wear or defective internal oil pump (relief valve).

## Possible Causes for Start Inhibit to be Active Causing the Engine Not to Crank

- Drive pedal sensor switch R1 not calibrated; follow programming instructions to calibrate foot pedal sensor.
- Drive pedal activated out of neutral (out of the calibrated deadband range):
  - Remove foot from drive pedal.
  - Adjust or repair the Hydroback/cable and/or main piston (propulsion) pump linkage.
- The control panel displays the critical fault icon showing code #38. See the ***General Troubleshooting*** section for an explanation and correction.

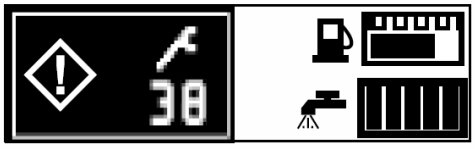


## Possible Causes for Run Inhibit to be Active Causing the Engine to Stop Running

- Loss of the engine run signal input to the main control board Pin # J1-1 (GRA). Note that a good diesel (Kubota) engine run signal will test 12V when measured (referenced) to B- ground. The run signal is lost when the voltage reads 0V.
- The control panel displays the critical fault icon showing code #38. See the ***General Troubleshooting*** section for an explanation and correction.

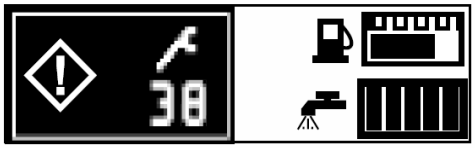

## *Diesel Engine Will Not Run at High Speed or Turbo Speed*

Conditions:

- With the engine running at idle, press the engine speed switch. (Note that when the speed switch indicator light is not on, the engine will run at low idle.) The indicator will turn green and the engine will run at high speed (2200 rpm).
- Hold the engine speed switch for more than two seconds and the engine will run at its highest turbo speed (2400 rpm).
- Press the engine speed switch again and the engine will revert back to high speed.
- Press the switch again and the engine will revert to idle. See additional troubleshooting notes for control circuit details.

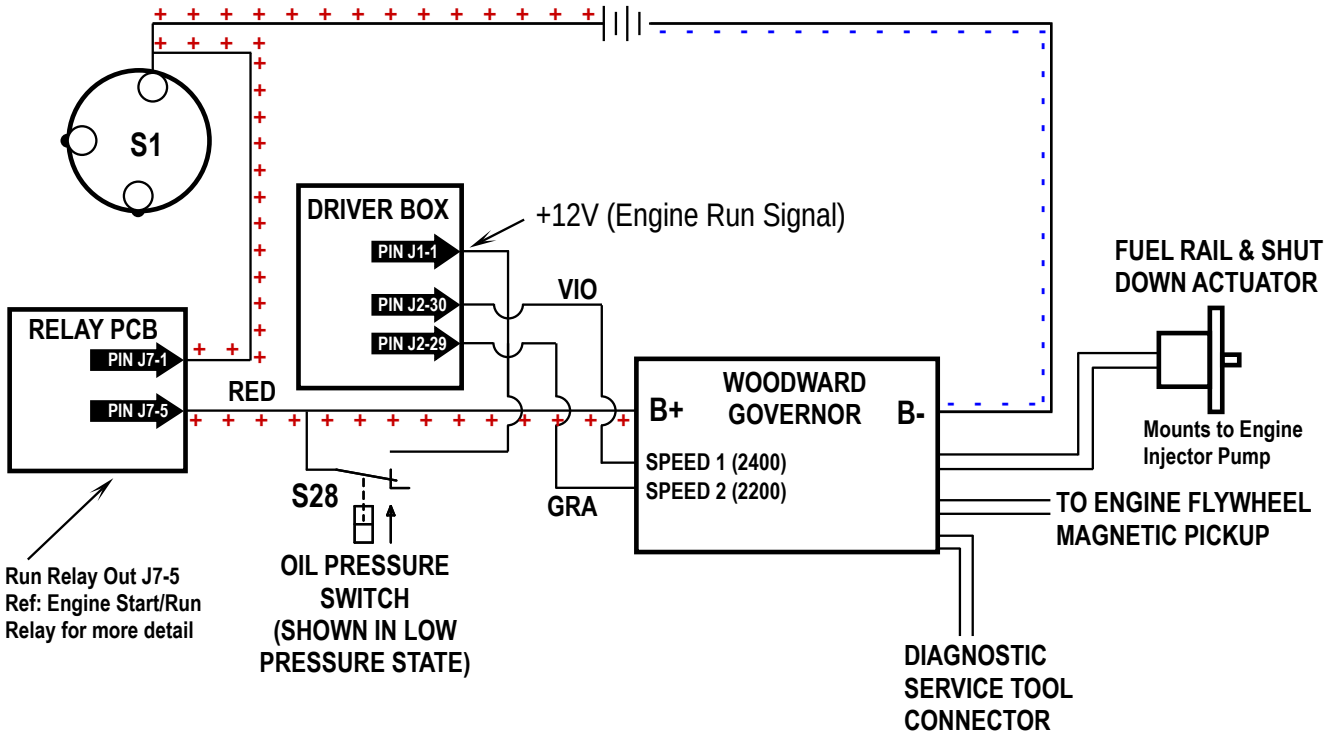


| Component | Current Amps | Coil Ohms |
|---|---|---|
| Actuator | 1-1.5 Amps | 3.2 ohms |

| Pin# | Wire Color | Function | Voltage at 1300 RPM | Voltage at 2200 RPM | Voltage at 2400 RPM |
|---|---|---|---|---|---|
| J2-30 on Driver Box | VIO | Input from Driver Box | 0 | 0 | +12 VDC |
| J2-29 on Driver Box | GRA | Input from Driver Box | 0 | +12 VDC | 0 |

## *Troubleshooting the Kubota Engine Speed Governing System*

Follow these procedures if the engine will not run at operating speed (2200 RPM) or high speed (2400 RPM).

Governor – APECS 3000, manufactured by Woodward (manual # SE-4049). Additional information can be found on their website.

To check the electrical control circuit:

1. With key switch on, check for battery voltage at the governor control box (B+ and B-) inputs. The correct value is 12 VDC.
2. Press the engine speed selection button (located on the operator control panel) with engine cranking/ running and test for 12 VDC at the governor speed select inputs 1 and 2. (See the ladder diagram for speed selection voltage relationships.)
   - If 0 volts, check the continuity of the speed select input wiring from the governor to the Driver Box (main controller).
   - If wiring check is OK, substitute a new Driver Box (main controller) and Dashboard Panel.
3. Check the status lamp on the governor for fault codes. Reference the flash code table found on the APECS 3000 website.
4. Test governor controller actuator output voltage at different speed selection modes (approximate value 3.9 VDC).
5. Check the continuity of the fuel control actuator wiring.
6. Test the **Fuel Solenoid Actuator** (see below) for an open circuit (the specification is 3.2 ohms).
7. With the engine cranking or running, check the governor magnetic pickup (RPM speed sensor) voltage signal (see the table below).
8. Remove and inspect the magnetic speed pickup sensor for damage. When reinstalling, thread the sensor in until it makes contact with the flywheel, then back it out one-half turn.

| Table for APECS 3000 Governor Magnetic Pickup Sensor AC Voltage Values | |
|---|---|
| **Test condition** | **Approximate AC Voltage Value** |
| Cranking | 10-11 VAC |
| 1300 RPM , Idle | 34 VAC |
| 2200 RPM, High Speed | 44 VAC |
| 2400 RPM, Turbo Speed | 46 VAC |

| | Approximate resistance value |
|---|---|
| Magnetic pick up sensor | 2100K Ohms |
| | |

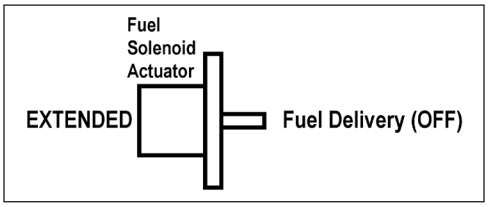


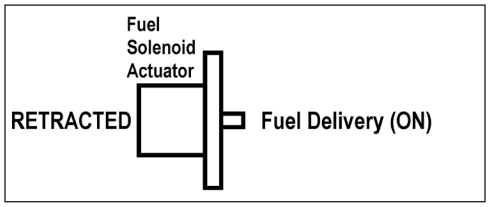

# Specifications

## Engine Specifications

| Kubota V1505-B-1 | |
|---|---|
| Engine Type | Vertical, liquid cooled, four-cylinder, four-cycle diesel engine, turbo-charged |
| Displacement | 91.41 cubic inches [1498cc] |
| Fuel | Diesel fuel No. 2-D (ASTM D975) |
| Injection Pump | Bosch MD type mini pump |
| Engine firing order | 1-3-4-2 |
| Injection Timing | 19 degrees before TDC |
| Oil Capacity | 5.5 qt. [5.2L] / Oil Pan depth 4.9” [12.4 cm] |
| Cooling Capacity | 8 qt. [7.5L] |
| Horsepower | 46 gross @2800 RPM, 41 Int @2400 RPM |
| Engine Speeds | Idle – 1300 RPM |
| | Normal Run – 2200 RPM |
| | High Output Turbo – 2400 RPM |
| Actuator | Current – 1 to 1.5 amps |
| | Coil Resistance – 3.2 ohms |

***Note:*** *Refer to the engine manufacturer’s Operator and Service manuals for more detailed engine specifications and service data.*

## Connector Callout – Relay PCB

| Pin# | Color | Type | Voltage | Pin Description and Function |
|---|---|---|---|---|
| J7-1 | VIO/GRA | Input | B+ | Module relays load power supply |
| J7-2 | BLU/PINK | Output | B+ | Engine ECU starter relay command |
| J7-3 | WHT/BRN | Input | 0V Floats | Engine start inhibit signal * |
| J7-4 | BLK | Input | B- | Module relays coil ground supply |
| J7-5 | PINK | Output | B+ | Engine ECU ignition run relay command |
| J7-6 | VIO/BRN | Input | B+ | Module starter relay Bat +coil signal |
| J7-7 | YEL/WHT | Input | 0V Floats | Engine run inhibit signal ** |
| J7-8 | ORN/GRN | Input | B+ | Module ignition relay Bat+ coil signal |

**** Note:*** *The normal condition for the start inhibit is in its non-inhibited state. A float voltage of approximately 8V (when referenced to B-) is measured when the key is in the start position. When inhibited, the signal is pulled to ground, will read 0V and will prevent the engine from cranking. This prevents the starter relay from being energized.*

***** Note:*** *The normal condition for the run inhibit is its non-inhibited state. A float voltage of approximately 10V (when referenced to B-) is measured when the key is in the start/run and run positions. When inhibited, the signal is pulled to ground, will read 0V and will prevent the engine ECU from receiving its needed input switch command. This prevents the ignition system from firing, and if the engine is running will cause it to shut down.*

## Special Tools

| | |
|---|---|
| Cooling System Tool |  |

# Engine System, Gasoline/LPG

## Functional Description

### Overview

The gasoline (petrol) and LPG Condor XL/Nilfisk ER 1300/1600 machines use a four-cylinder 1.6L GM engine to power the two hydraulic pumps that run the machine drive wheel, scrub/sweep systems, vacuum fan motor, the scrub/sweep and squeegee lift actuators and the steering system. An E-controls Engine System modifies the fuel mixture based on feedback input from oxygen sensors, and also controls the throttle and ignition system. Gasoline engines use fuel injectors. The LPG engine uses an electronically-controlled vaporizer/pressure regulator.

### GM Engine Starter Circuit

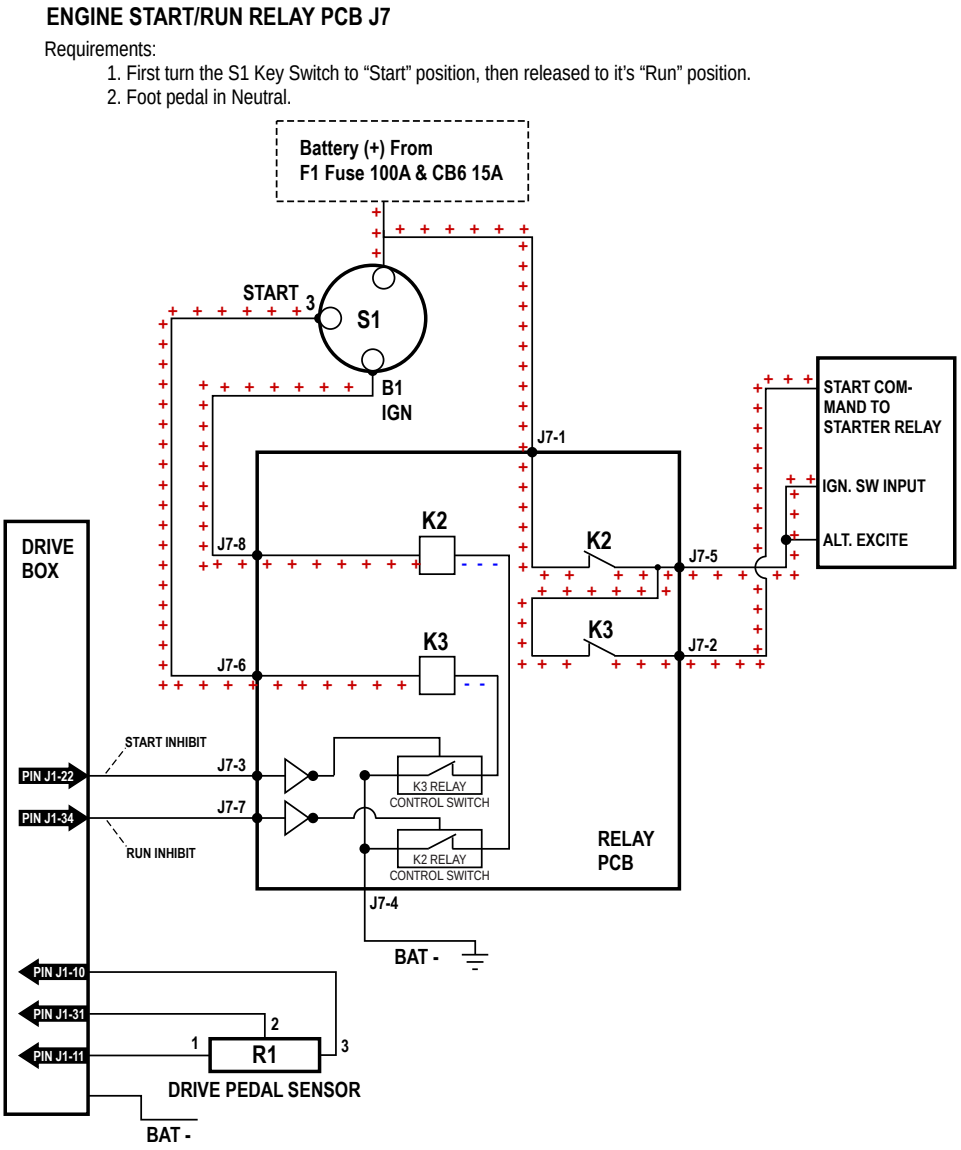

## *Circuit Description*

- For the engine to start:
  - The **Key Switch S1** must provide positive voltage to the **START** relay coil **K3** and the **IGN** relay coil **K2**.
  - The **K2 RELAY CONTROL SWITCH** must be closed to provide a ground to the **IGN** relay coil **K2**. This closes the **K2** relay contacts to provide positive voltage to the **IGN. SW INPUT**. Note that if the **Driver Box** sends a **RUN INHIBIT** signal from **J1-34** to the **K2 RELAY CONTROL SWITCH** to open the switch, no ground will be provided to the **IGN** relay coil **K2**, the **K2** contacts will not close and no positive voltage will be sent to the **IGN. SW INPUT**.
  - The **K3 RELAY CONTROL SWITCH** must be closed to provide a ground to the **START** relay coil **K3**. This closes the **K3** relay contacts to provide positive voltage to the **START COMMAND TO STARTER RELAY**. Note that if the **Driver Box** sends a **START INHIBIT** signal from **J1-22** to the **K3 RELAY CONTROL SWITCH** to open the switch, no ground will be provided to the **START** relay coil **K3**, the **K3** contacts will not close and no positive voltage will be sent to the **START COMMAND TO STARTER RELAY**.
  - The drive pedal must be in the neutral position and the **Drive Pedal Sensor** must be in the deadband range.
- For the engine to run:
  - The **K2 RELAY CONTROL SWITCH** must remain closed to provide a ground to the **IGN** relay coil **K2**. This keeps the **K2** relay contacts closed to maintain positive voltage to the **IGN. SW INPUT**.
  - The **Coolant Temperature Output** must not provide an "overheat" signal to pin **J1-30** on the **Driver Box**. The engine coolant temperature sensor is a temperature-sensitive resistor. If the engine coolant temperature exceeds 225 degrees F. for more than five seconds, the Engine System senses the threshold resistance in the coolant temperature sensor. The Engine System then provides a **Coolant Temperature Output** signal to pin **J1-30** to generate a fault code and shut the engine off.
  - The **Low LP Pressure Switch S5** must be open to indicate adequate LP fuel supply (LPG engines only).



***Note:*** *LPG engines will continue to run for a few seconds after the key switch is turned off. This burns any fuel remaining in the engine to prevent backfires the next time the engine is started. When the key switch is turned off, the Engine System switches off the fuel supply to the engine, but keeps the ignition system on until it senses that the engine has stopped running.*

## GM 1.6L Gasoline Fuel System Description

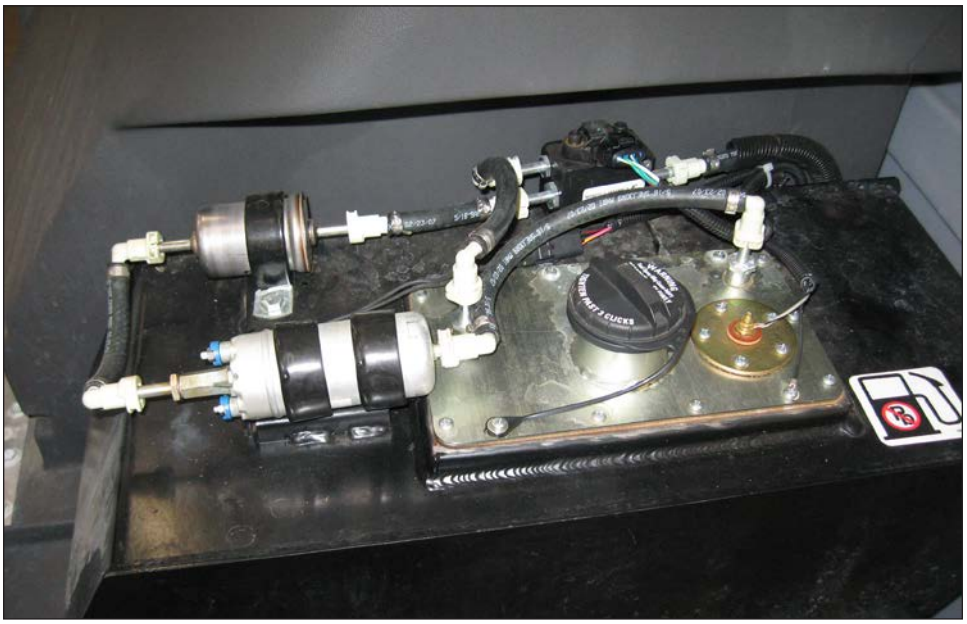

This engine is equipped with a fuel injector rail that does not have a pressure regulator. Fuel pressure for this engine is regulated by the engine's ECM controlling the fuel pump via pulse width modulation. The ECM receives fuel pressure and temperature feedback from the gasoline fuel sensor manifold and uses this information to control the ground side of the fuel pump.

Fuel pressure is regulated by the ECM pulse width modulating (PWM) the fuel pump.

The fuel pressure and temperature sensor manifold has a return or "bleed" circuit that is comprised of a .020" orifice and a 6-psi check valve that connects back to the equipment fuel tank. This circuit is used to bleed off any vapor that develops in the line and returns a small amount of fuel to the tank.

The fuel comes from the fuel tank and passes through the in-line fuel pump. Fuel exits the fuel pump, passes through the filter and then enters the fuel pressure and temperature manifold assembly. Fuel flows through the feed circuit and is delivered to the fuel injector rail. Fuel that enters the bleed circuits through the bypass valve in the manifold is returned to the fuel tank.

# Component Locations

## Gasoline (Petrol)

$O_2$ Sensor (in exhaust manifold) (pre CATCON)

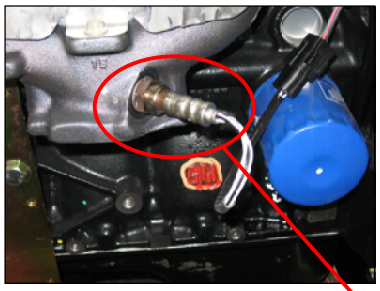

TMAP Sensor

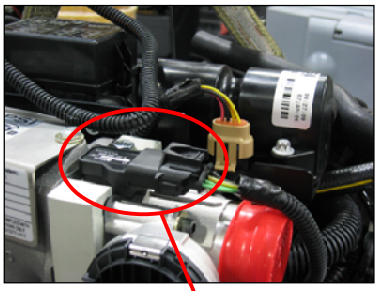

ETC (Electronic Throttle Control)

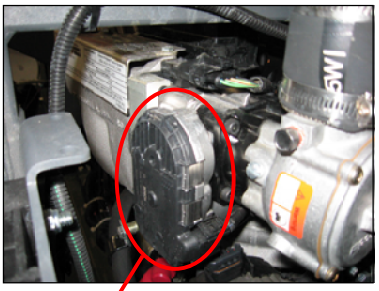

$O_2$ Sensor (by exhaust pipe)



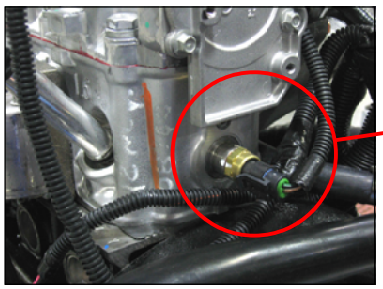

ECT (Engine Coolant Temperature) Sensor

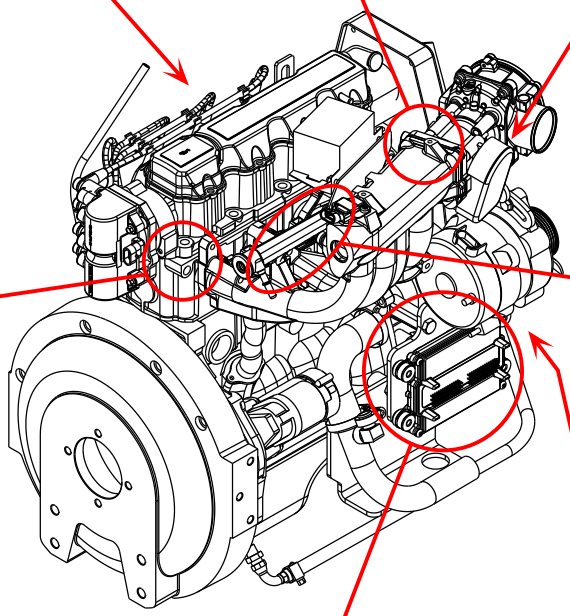



Fuel Injectors and Connectors

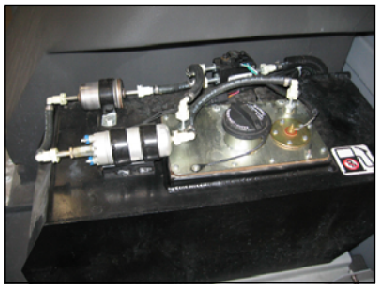

Fuel Pump and Manifold (mounted on fuel tank)



ECM and Oil Pressure Switch

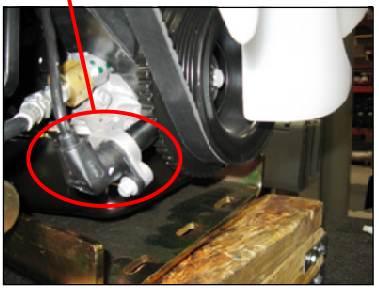

Crank Position Sensor

## Gasoline (Petrol)

The Gasoline Sensor Interface (fuel pressure regulation and temperature sensor manifold assembly) is mounted on the fuel tank.



Gasoline Sensor Interface

## Gasoline (Petrol) and LPG



X1 and X2 Electrical Connectors

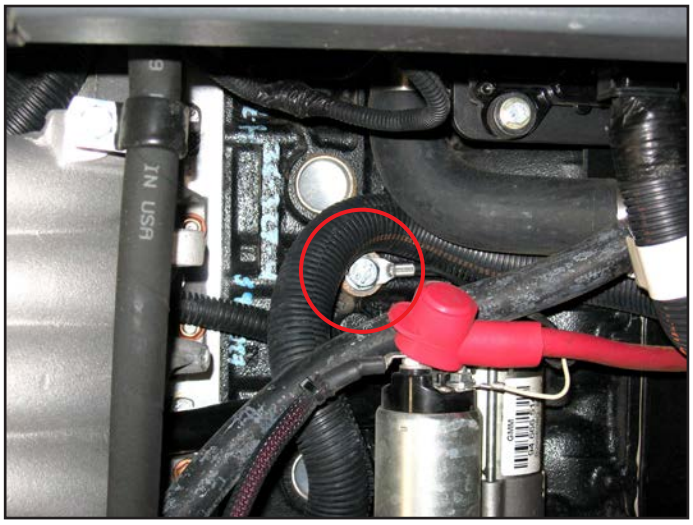


Engine Ground Connection

## *LPG*

**Fuel Temperature Sensor (mounted on EPR)**

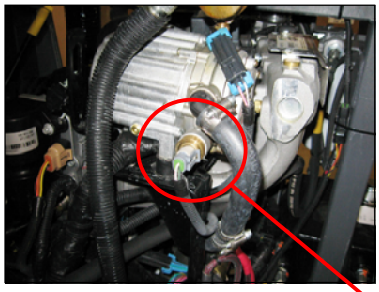

**TMAP Sensor**

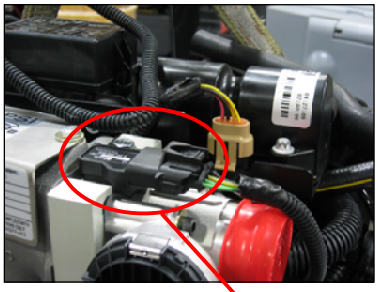

**ETC (Electronic Throttle Control)**

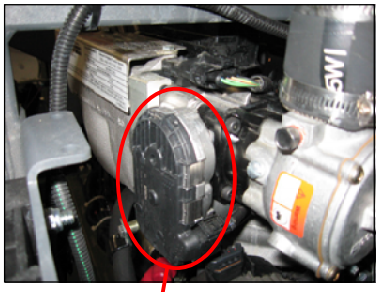



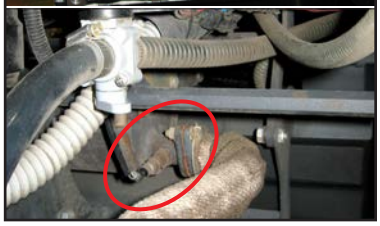

**$O_2$ Sensors (exhaust manifold/pipe)**

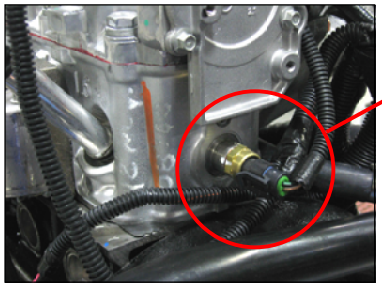

**ECT (Engine Coolant Temperature) Sensor**

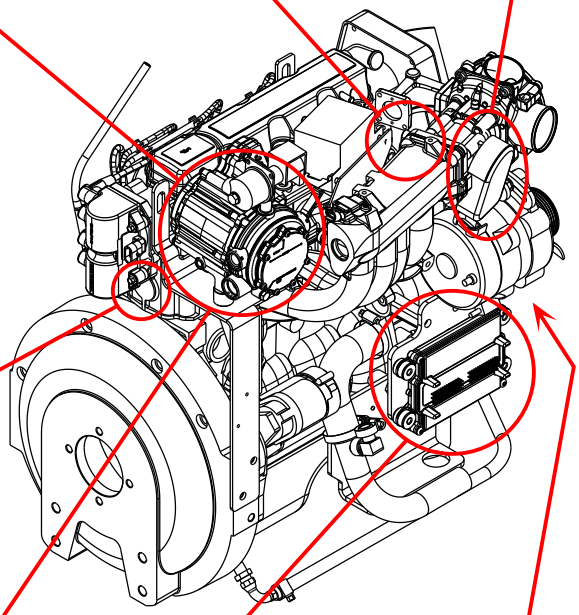



**EPR and Fuel Lockout and Filter**



**ECM and Oil Pressure Switch**



**Crank Position Sensor**

## Engine Fuse Box

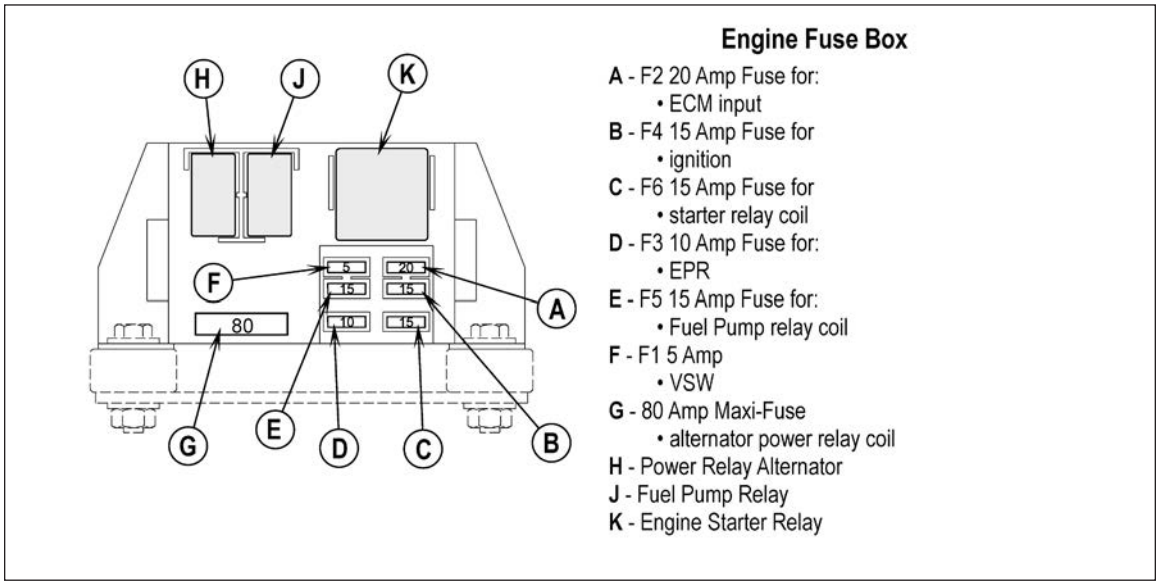


**Engine Fuse Box**

**A** - F2 20 Amp Fuse for:
- ECM input

**B** - F4 15 Amp Fuse for
- ignition

**C** - F6 15 Amp Fuse for
- starter relay coil

**D** - F3 10 Amp Fuse for:
- EPR

**E** - F5 15 Amp Fuse for:
- Fuel Pump relay coil

**F** - F1 5 Amp
- VSW

**G** - 80 Amp Maxi-Fuse
- alternator power relay coil

**H** - Power Relay Alternator
**J** - Fuel Pump Relay
**K** - Engine Starter Relay

## Firing Order

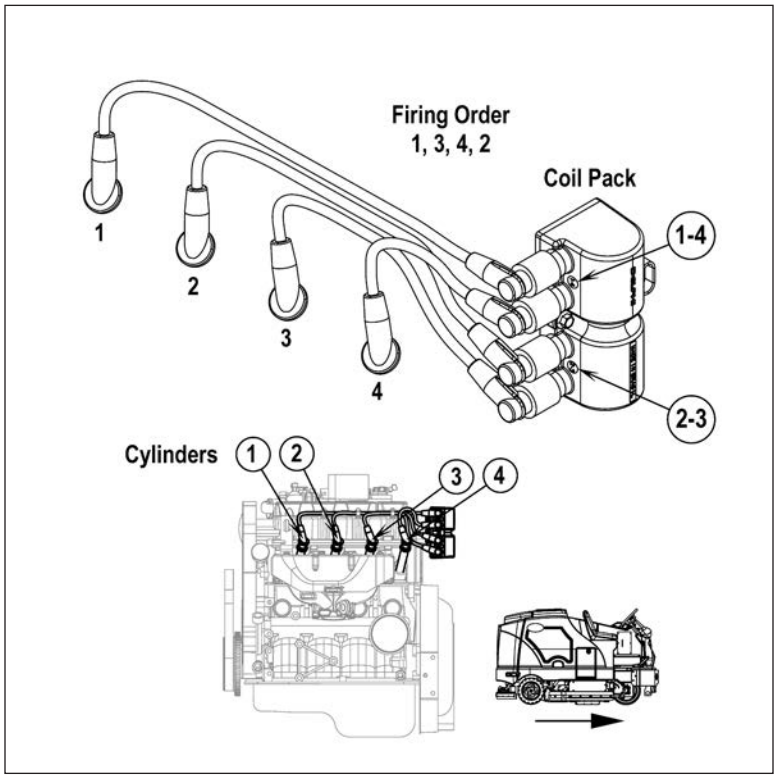

# Maintenance and Adjustments

***Warning! Before performing any machine maintenance or adjustments, make sure the key switch is off, the key is removed from the machine and the parking brake is engaged.***

## Engine Oil

Check the engine oil level when the machine is parked on a level surface and the engine is cool. Change the engine oil after the first 35 hours of operation and every 150 hours after that. Use any SF or SG rated oil meeting API specifications and suited to seasonal temperatures. Refer to the engine manufacturer's service manuals for oil capacities and additional engine specifications. Replace the oil filter with every oil change.

| Temperature Range | Oil Weight |
|---|---|
| Above 60° F (15° C) | SAE 10W-30 |
| Below 60° F (15° C) | SAE 5W-30 |

## Special Liquid Propane Fuel System Maintenance on the GM 1.6L Engine

Every 150 hours inspect and drain any oil buildup from the LP fuel system electronic pressure regulator (EPR). During the course of normal operation, oils or "heavy ends" may build up inside the chambers of the propane regulator. These oils and heavy ends may be a result of poor fuel quality, contamination of the fuel supply chain or regional variation in the fuel makeup. If the oil buildup is significant it can affect the function of the fuel control system. To drain the EPR:

1. Move the machine to a well-ventilated area free of external ignition sources.
2. Start the engine and let it warm up to operating temperature.
3. Close the manual tank valve to run the engine out of fuel.
4. When the engine stops, turn the key switch off.

***Note:*** *Have a small container handy to catch the oil you drain from the EPR.*

5. Disconnect the **Electrical Connector** from the **LPG Fuel Temperature Sensor**.
6. Remove the **Retainer Clip** holding the **LPG Fuel Temperature Sensor** and remove the **Sensor** from the **EPR** body. Note that it may be necessary to loosen or remove the **Nuts** from the bottom of the mounting isolators in order to tip the **EPR** sufficiently to drain the oil.
7. When the oil has been drained from the **EPR**, reinstall the **LPG Fuel Temperature Sensor** and reconnect the **Electrical Connector**.
8. Reinstall and/or tighten the mounting isolator **Nuts** if removed or loosened in step 6 above.

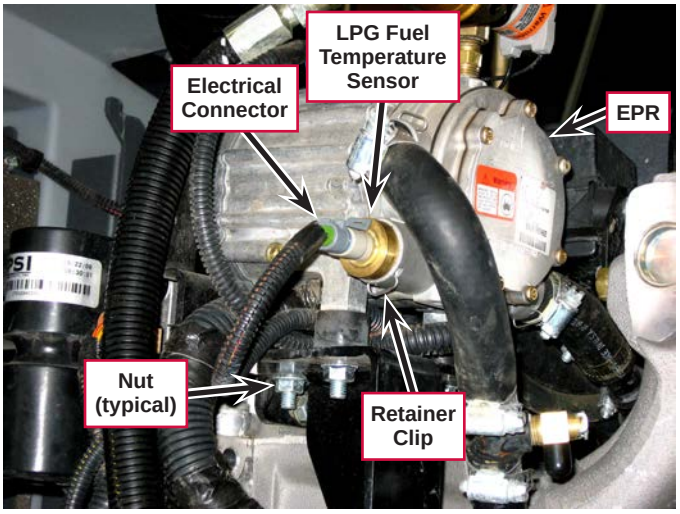

9. Open the manual tank valve and start the engine.
10. Verify all connections.
11. Dispose of the waste oil in a safe and approved manner.

***Note:*** *This procedure can also be found in the Tier 2 PSI 1.6L PFI certified engine service manual, form # PSI1P6LPFI-A.*

## Engine Coolant

### Checking Engine Coolant

***Caution! Do not remove the radiator cap when the engine is hot.***

To check the engine coolant level, open and prop the engine cover and observe the coolant level in the coolant overflow tank. If the level is low, add a 50/50 mix of water and the recommended type antifreeze. Clean the radiator and oil cooler exteriors every 150 hours by washing with low-pressure water or using compressed air.

***Service Note:*** *The oil cooler tips out for easy cleaning.*

### Replacing Engine Coolant

One possible cause of engine overheating is trapped air in the cooling system. It's recommended that you use a Cooling System Tool when changing the engine coolant. The Cooling System Tool pulls a vacuum on the cooling system prior to filling to prevent air from being trapped in the cooling system.

Note that there are several types of Cooling System Tools. The following instructions describe how to use a typical type of tool. Refer to the operating instructions included with your particular tool if different than the example shown here.

1. Connect a **Compressed Air Supply Line** to the fitting on the Cooling System Tool.
2. Connect the **Coolant Supply Line** to the Cooling System Tool. Make sure the **Coolant Valve** is closed.
3. Insert and hold the Cooling System Tool onto the radiator filler neck, then press the **Air Switch**. The compressed air travelling through the **Venturi Tube Assembly** will pull a vacuum on the cooling system to remove air from the system.
4. Once the vacuum reading on the **Gauge** reaches approximately 25 on the green scale, release the **Air Switch**. Note that this also a good opportunity to check for cooling system leaks,

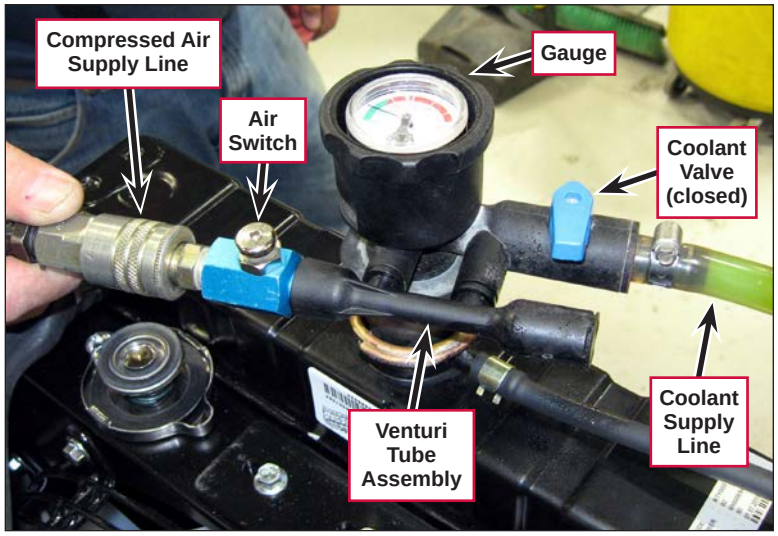


**Removing the Air from the Cooling System with Cooling System Tool**

5. Continue to hold the Cooling System Tool onto the radiator filler neck and open the **Coolant Valve** to allow coolant to flow into the radiator.
6. Once the pressure on the **Gauge** reaches approximately 5 on the red scale and the radiator is almost full, shut off the **Coolant Valve** and remove the Cooling System Tool from the radiator filler neck.
7. Top off the radiator and overflow tank as necessary.

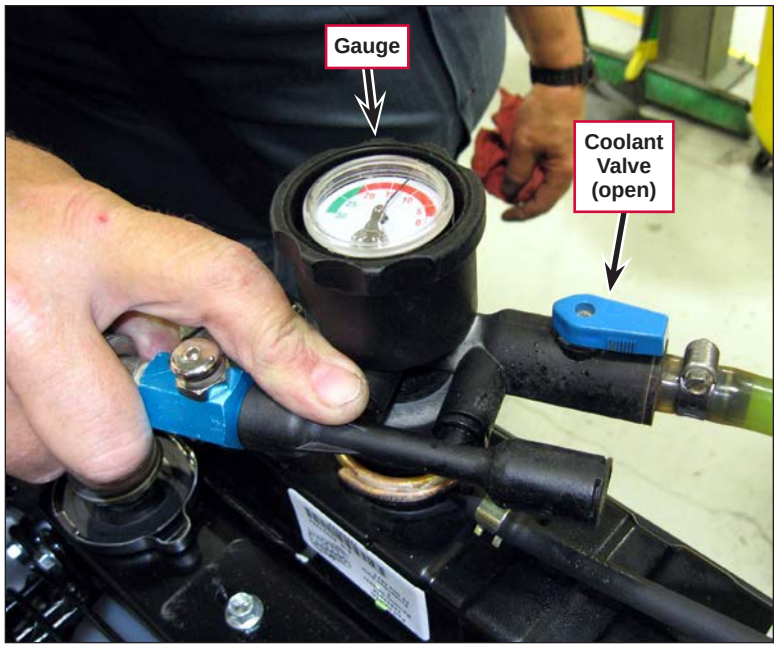


**Filling Cooling System with Coolant**

## *Engine Air Filter Maintenance*

Check the **Engine Air Filter Service Indicator** before each use of the machine. Do not service the air filter unless the red flag is visible in the service indicator.

***Caution! When servicing the engine air filter elements, use extreme care to prevent loose dust from entering the engine. Dust can severely damage the engine.***

The engine air filter contains a primary (outer) and a safety (inner) filter element. The primary element can be cleaned twice before being replaced.

The safety element should be replaced every third time that the primary filter element is replaced. Never attempt to clean the inner safety element.

To clean the primary filter element:

1. Un-snap the two clips at the end of the air filter and remove the end housing.
2. Pull the primary element out.
3. Clean the element with compressed air (maximum pressure 100 psi) or wash it with water (maximum pressure 40 psi). **Do not** put the element back into the canister until it is completely dry.

# Troubleshooting

## General Troubleshooting

| Problem | Cause | Correction |
|---|---|---|
| Engine will not run at high speed (2200 RPM) | 2200 RPM no input @ ECM (fault code 05 displayed) | • Check for 12V (+) from controller wire J2-29 (GRA/ORN) to battery ground (-) with the engine speed switch 51 active. Should read 12V. If 0V, troubleshoot the throttle wire. Then if still 0V, substitute a good known controller and dashboard panel.<br>• If 12V and no 2200 RPM throttle response, test engine controller output to specific throttle control G/LP/D. See engine wiring diagram for additional help. |
| Engine will not run at “turbo” speed (2400 RPM) | 2400 RPM no input @ ECM (fault code 06 displayed) | • Check for 12V (+) from controller wire J2-30 (GRA/BLU) to battery ground (-) with the engine speed switch 51 active. Should read 12V. If 0V, troubleshoot the throttle wire. If still 0V substitute a good known controller and dashboard panel.<br>• If 12V and no 2400 RPM throttle response, test engine controller output to specific throttle control G/LP/D. |
| All machine systems shut down. | Coolant temperature high (fault code 33 displayed on the LCD). | Refer to the ***Engine Overheating Problems*** section below. |
| | The oil pressure has dropped to 3-7 psi (fault code 37 displayed on the LCD). | Refer to the ***Loss of Oil Pressure Protection*** section below |
| | General engine fault; engine temperature is too high, the oil pressure is low (fault code 38 displayed on the LCD). | • Refer to the ***Engine Overheating Problems*** section below.<br>• Refer to the ***Loss of Oil Pressure Protection*** section below |

## Over-temperature Protection

The GM 1.6L engine will set a diagnostic test code (DTC 116) after five seconds at temperatures over 215 °F, and the ECM will reduce the engine power to level one (maximum throttle position of 50%). If the engine continues to overheat, it will set a code (DTC 217) after 10-15 seconds at temperatures over 225 °F, then the engine will shut down.

## Engine Overheating Problems

Use the checklist below as a guide to thoroughly check the engine cooling system.

- Check the coolant level in the overflow tank and radiator.
- Inspect and clean the radiator and hydraulic oil cooler.
- Check for correct operation of the belt-driven engine cooling fan (slippage).
- Check to see that the engine thermostat opens.
- Check for correct water pump operation.
- Check the engine crankcase oil level.
- Check for air trapped in the cooling system. (Refer to the ***Engine Coolant/Replacing Engine Coolant*** section.)

## Loss of Oil Pressure Protection

The engine will shut down if the oil pressure drops to 3-7 psi. Check for possible causes for low oil pressure such as:

- Engine crankcase level is low.
- Incorrect oil viscosity.
- Fault in oil pressure switch.
- Excessive engine wear or defective internal oil pump (relief valve)

## Possible Causes for Start Inhibit to be Active Causing the Engine Not to Crank

- Drive pedal sensor switch R1 not calibrated; follow programming instructions to calibrate foot pedal sensor.
- Drive pedal activated out off neutral (out of the calibrated dead-band range):
  - Remove foot from drive pedal.
  - Adjust or repair the Hydroback/cable and/or main piston (propulsion) pump linkage.
- The control panel displays the critical fault icon showing code #38. See the ***General Troubleshooting*** section for an explanation and correction.

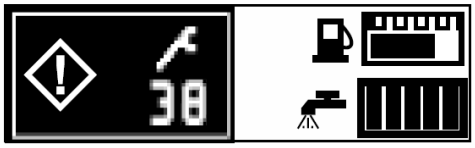


## Possible Causes for Run Inhibit to be Active Causing the Engine to Stop Running

- Loss of the engine run signal input to the main control board Pin # J1-1 (GRA). Note that a good LP/G (GM 1.6L) engine run signal will test 0V when measured (referenced) to B- ground. The run signal is lost when the voltage reads 12V.
- The control panel displays the critical fault icon showing code #38. See the ***General Troubleshooting*** section for an explanation and correction.



## Engine Diagnostics

### To Access the Engine Diagnostic Information Using the Controller Interface Kit and a PC

The Diagnostic Communications Cable and Software Kit (p/n 56305647) allows you to connect a laptop PC to the engine to view the various engine parameters, configuration settings and error codes, and displays the engine software and hardware information.



Diagnostic Communication Cable and software, p/n 56305647

Note that this is the preferred way to view the engine diagnostic information. To use the Controller Interface Kit:

1. Install the software from the provided CD onto your PC.
2. Connect the USB connector on the kit cable to a USB port in your PC.
3. Remove the **Protective Cap**, then connect the kit cable to the **Communication Port** on the engine.

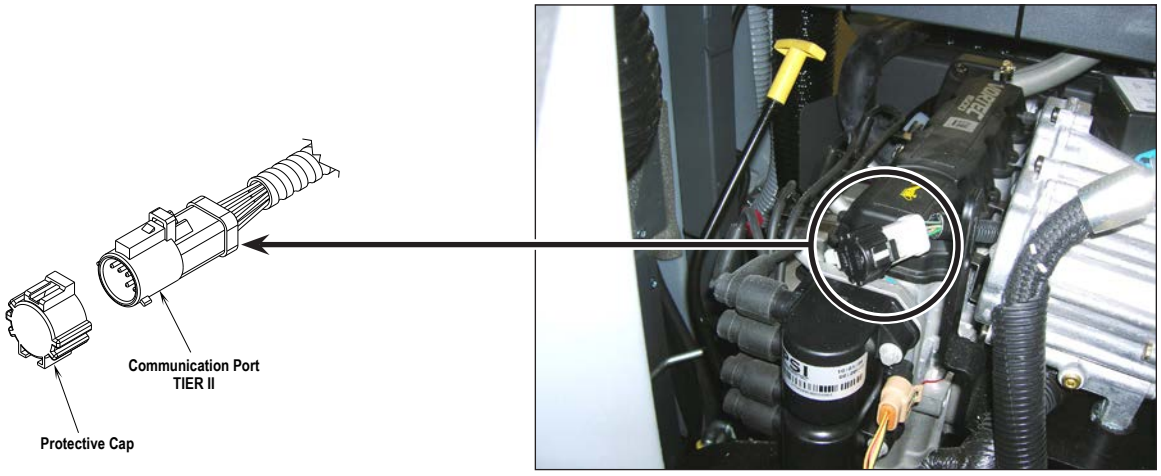

Note that the minimum system requirements for the software in the Diagnostic Communications Cable and Software Kit are as follows:

- Windows® XP, 2000 or 98SE (Second Edition) operating system
- Minimum processor speed – Pentium® II 450 MHz
- Minimum RAM requirements:
  - Windows® XP – 256 MB
  - Windows® 2000 – 128 MB
  - Windows® 98SE – 128 MB
- At least one available RS232 serial or USB port. Note that the USB driver does not support Windows 98 SE.



### *To Access the Engine DTC Error Codes Manually*

You can access the engine DTC (diagnostic test code) error codes manually without using a Controller Interface Kit and PC. The codes will be shown through a sequence of blinks on the **Warning Indicator Light**.

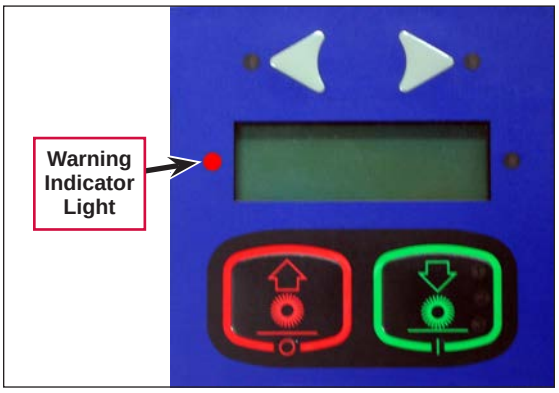


To access the codes:

1. Remove the **Protective Cap** from the **Communication Port** on the engine.
2. Use a wire to jumper **Pin #1** to **Pin #4** as shown.

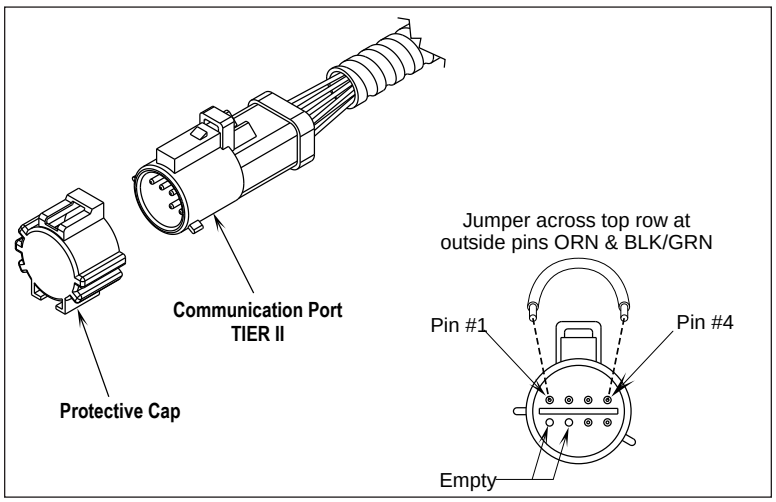


3. Turn the key switch to the on position. You can now read the error codes by observing the blinks on the **Warning Indicator Light**. Be ready to write down any codes that may be stored.

***Note:*** *The light will always blink "1-6-5-4" three times at the beginning and at the end of the error code number display series.*

For example, error code "118", indicating an ECT (engine coolant temperature) high-voltage condition, would be indicated as follows:

a. The light will show one blink, a short pause, six blinks, a short pause, five blinks, a short pause, then four blinks. Note that this 1-6-5-4 sequence is not an error code, but will be repeated three times to indicate the beginning of the error code number display series.

b. The light will show the first actual error code (118 in this example) with one blink, a short pause, one blink, a short pause, then eight blinks. This 1-1-8 sequence will be repeated three times, then the light will blink the next error code number sequence in the series (if present).

c. When all of the error code number sequences have been displayed, the light will blink the 1-6-5-4 sequence three times again to indicate the end of the error code number series.

d. The light will then repeat steps a through c above.

## *1.6L DTC Code to SPN:FMI Code Cross Reference*

| DTC Code | Description | SPN Code | FMI Code |
|---|---|---|---|
| 16 | Crank Never Synced at Start | 636 | 8 |
| 91 | Fuel Pump Low Voltage | 94 | 4 |
| 92 | Fuel Pump High Voltage | 94 | 3 |
| 107 | MAP Low Voltage | 106 | 4 |
| 108 | MAP High Pressure | 106 | 16 |
| 111 | IAT Higher Than Expected 1 | 105 | 15 |
| 112 | IAT Low Voltage | 105 | 4 |
| 113 | IAT High Voltage | 105 | 3 |
| 116 | ECT Higher Than Expected 1 | 110 | 15 |
| 117 | ECT Low Voltage | 110 | 4 |
| 118 | ECT High Voltage | 110 | 3 |
| 121 | TPS 1 Lower Than TPS 2 | 51 | 1 |
| 122 | TPS 1 Signal Voltage Low | 51 | 4 |
| 123 | TPS 1 Signal Voltage High | 51 | 3 |
| 127 | IAT Higher Than Expected 2 | 105 | 0 |
| 129 | BP Low Pressure | 108 | 1 |
| 134 | EGO 1 Open/Inactive | 724 | 10 |
| 154 | EGO 2 Open/Inactive | 520208 | 10 |
| 171 | Adaptive Learn High Gasoline | 520200 | 0 |
| 172 | Adaptive Learn Low Gasoline | 520200 | 1 |
| 182 | Fuel Temp Gasoline Low Voltage | 174 | 4 |
| 183 | Fuel Temp Gasoline High Voltage | 174 | 3 |
| 187 | Fuel Temp LPG Low Voltage | 520240 | 4 |
| 188 | Fuel Temp LPG High Voltage | 520240 | 3 |
| 217 | ECT Higher Than Expected 2 | 110 | 0 |
| 219 | Max Govern Speed Override | 515 | 15 |
| 221 | TPS 2 Signal Voltage Low | 51 | 0 |
| 222 | TPS 2 Signal Low Voltage | 520251 | 4 |
| 223 | TPS 2 Signal High Voltage | 520251 | 3 |
| 336 | Crank Sync Noise | 636 | 2 |
| 337 | Crank Loss | 636 | 4 |
| 420 | Gasoline Cat Monitor | 520211 | 10 |
| 524 | Oil Pressure Low | 100 | 1 |
| 562 | System Voltage Low | 168 | 17 |
| 563 | System Voltage High | 168 | 15 |
| 601 | Flash Checksum Invalid | 628 | 13 |

| DTC Code | Description | SPN Code | FMI Code |
|---|---|---|---|
| 604 | RAM Failure | 630 | 12 |
| 606 | COP Failure | 629 | 31 |
| 642 | External 5V Reference Low | 1079 | 4 |
| 643 | External 5V Reference High | 1079 | 3 |
| 685 | Power Relay Open | 1485 | 5 |
| 686 | Power Relay Shorted | 1485 | 4 |
| 687 | Power Relay Short to Power | 1485 | 3 |
| 1111 | Fuel Rev Limit | 515 | 16 |
| 1112 | Spark Rev Limit | 515 | 0 |
| 1151 | Closed Loop Multiplier High LPG | 520206 | 0 |
| 1152 | Closed Loop Multiplier Low LPG | 520206 | 1 |
| 1155 | Closed Loop Multiplier High Gasoline | 520204 | 0 |
| 1156 | Closed Loop Multiplier Low Gasoline | 520204 | 1 |
| 1161 | Adaptive Learn High LPG | 520202 | 0 |
| 1162 | Adaptive Learn Low LPG | 520202 | 1 |
| 1165 | LPG Cat Monitor | 520213 | 10 |
| 1171 | LPG Pressure Higher Than Expected | 520260 | 0 |
| 1172 | LPG Pressure Lower Than Expected | 520260 | 1 |
| 1173 | EPR Comm Lost | 520260 | 31 |
| 1174 | EPR Voltage Supply High | 520260 | 3 |
| 1175 | EPR Voltage Supply Low | 520260 | 4 |
| 1176 | EPR Internal Actuator Fault | 520260 | 12 |
| 1177 | EPR Internal Circuitry Fault | 520260 | 12 |
| 1178 | EPR Internal Comm Fault | 520260 | 12 |
| 1612 | RTI 1 Loss | 629 | 31 |
| 1613 | RTI 2 Loss | 629 | 31 |
| 1614 | RTI 3 Loss | 629 | 31 |
| 1615 | A/D Loss | 629 | 31 |
| 1616 | Invalid Interrupt | 629 | 31 |
| 1626 | CAN Tx Failure | 639 | 12 |
| 1627 | CAN Rx Failure | 639 | 12 |
| 1628 | CAN Address Conflict Failure | 639 | 13 |
| 2111 | Unable to Reach Lower TPS | 51 | 7 |
| 2112 | Unable to Reach Higher TPS | 51 | 7 |
| 2229 | BP Pressure High | 108 | 0 |

# Specifications

## Engine Specifications

| 1.6 L GM | | |
|---|---|---|
| Engine type | | Vertical, liquid cooled, four-cylinder, single overhead cam, distributor-less |
| Displacement | | 98 cubic inches (1600 cc) |
| Fuel | Gasoline | 87-octane unleaded gasoline with no more than 10% ethanol by volume |
| | LP | 33-lb. tank size (liquid withdrawal system) |
| Spark Plugs | | AC Delco p/n 93206675, gap .032 -.035 [0.8 mm-0.9 mm] |
| Spark Plug Wiring | | Match numbered coil position to spark plug number (see the ***Component Locations/Firing Order*** subsection) |
| Engine Firing Order | | 1-3-4-2 |
| Ignition Timing | | Fixed (controlled by engine ECM) |
| Engine Rotation | | CCW (flywheel end) |
| Valve lifters | | Hydraulic |
| Oil Capacity | | 3.7 qt. [3.5L] with oil filter |
| Oil Pressure | | 21 psi (minimum with engine hot at idle) |
| Cooling System | | 3.5 qt. (engine only) |

## Connector Callout – Relay PCB

| Pin# | Color | Type | Voltage | Pin Description and Function |
|---|---|---|---|---|
| J7-1 | VIO/GRA | Input | B+ | Module relays load power supply |
| J7-2 | BLU/PINK | Output | B+ | Engine ECU starter relay command |
| J7-3 | WHT/BRN | Input | 0V Floats | Engine start inhibit signal * |
| J7-4 | BLK | Input | B- | Module relays coil ground supply |
| J7-5 | PINK | Output | B+ | Engine ECU ignition run relay command |
| J7-6 | VIO/BRN | Input | B+ | Module starter relay Bat +coil signal |
| J7-7 | YEL/WHT | Input | 0V Floats | Engine run inhibit signal ** |
| J7-8 | ORN/GRN | Input | B+ | Module ignition relay Bat+ coil signal |



**** Note:*** *The normal condition for the start inhibit is in its non-inhibited state. A float voltage of approximately 8V (when referenced to B-) is measured when the key is in the start position. When inhibited, the signal is pulled to ground, will read 0V and will prevent the engine from cranking. This prevents the starter relay from being energized.*



***** Note:*** *The normal condition for the run inhibit is its non-inhibited state. A float voltage of approximately 10V (when referenced to B-) is measured when the key is in the start/run and run positions. When inhibited, the signal is pulled to ground, will read 0V and will prevent the engine ECU from receiving its needed input switch command. This prevents the ignition system from firing, and if the engine is running will cause it to shut down.*

## *Special Tools*

| | |
|---|---|
| Diagnostic Communication Cable and software, p/n 56305647 |  |
| Cooling System Tool |  |

# Hydraulic System

## Functional Description

### Overview

The hydraulic system powers the drive wheel motor, scrub brushes, vacuum fan and side brush/brooms (if the machine is so equipped). The hydraulic system also actuates the main scrub deck and side brush/broom lift cylinders, the squeegee lift cylinder and the drive wheel steering assembly.

The engine drives the two hydraulic pumps that send the hydraulic oil to the various components:

- The main piston (propulsion) pump (1.44 CIR) is a variable-displacement pump that powers the drive wheel.
- The dual-displacement, low-speed (accessory) pump is actually two separate pumps in one unit (1.20 and 0.58 CIR) and powers the other machine components.

A system of electrically-controlled solenoid valves directs the hydraulic oil to the various system components to perform the needed scrubbing/sweeping and solution recovery functions.



***Note:*** *The electrical wiring diagrams/schematics use an "**L**" followed by a number to identify the solenoid (coil) portion of a solenoid valve. The hydraulic schematic uses an "**S**" followed by a number to identify the corresponding cartridge (hydraulic valve). This pairing of numbers is used to establish the connection between the solenoid coils and their corresponding hydraulic valves. For instance, solenoid coil **L6** is mounted on hydraulic valve **S6** and controls hydraulic valve **S6**.*

## Electrical Schematic

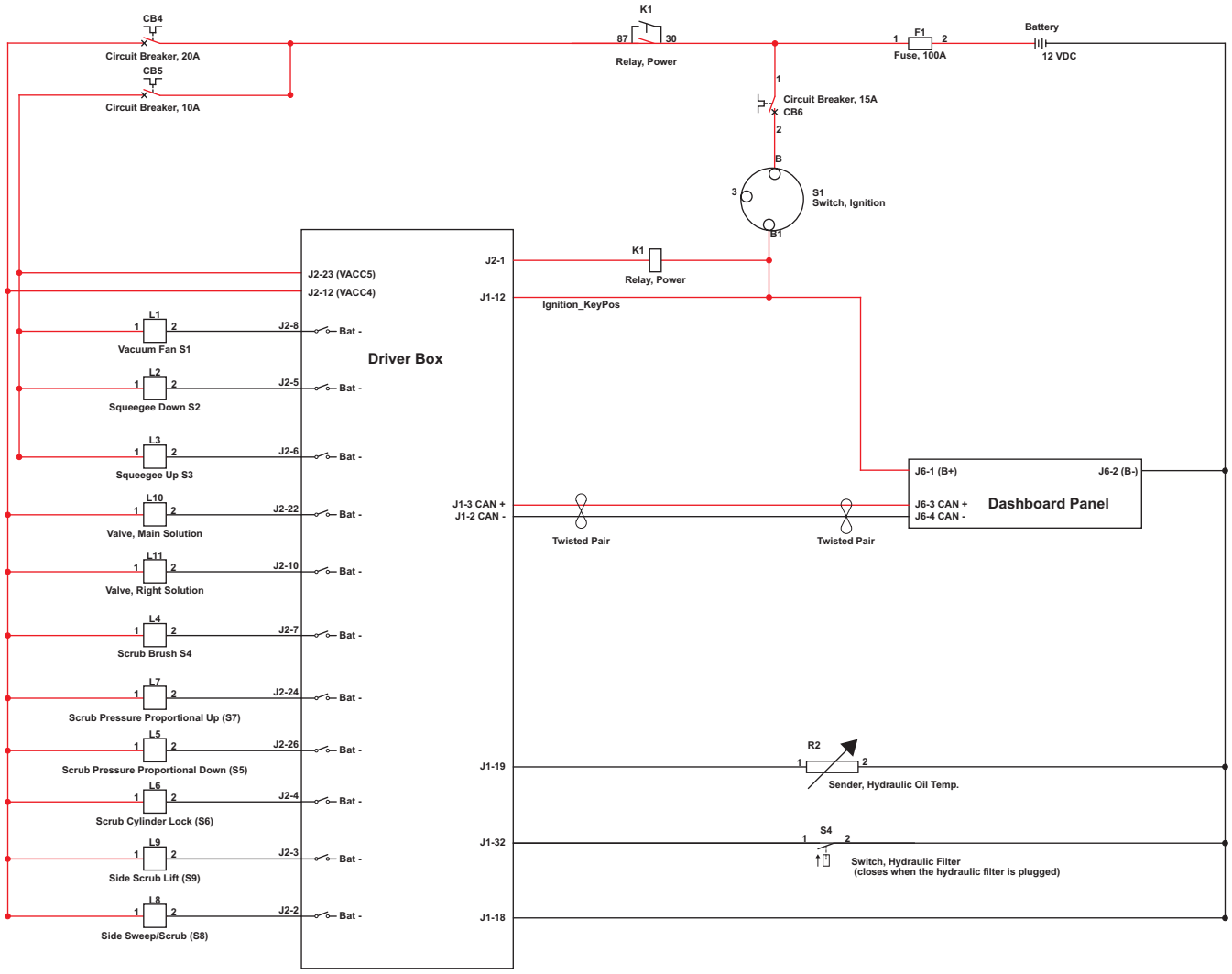


## Electrical Circuit Description

- For the actuators to lower the scrub deck and squeegee, the **Driver Box** must receive a signal from the **Dashboard Panel** via the CAN Bus that the Operator has actuated the scrub system.
- For the vacuum fan to run, the **Driver Box** must receive a signal from the **Drive Pedal Sensor R1** that the drive pedal has been moved from the neutral position.
- The **Hydraulic Oil Temp. Sender R2** must be within the correct resistance range that indicates the hydraulic oil is within the acceptable temperature range. Note that **R2** has a variable resistance to ground, 12 to 500 ohms. The voltage when active is 0.16-2.24 volts.
- The **Hydraulic Filter Switch S4** must be open to indicate that the hydraulic filter is not plugged.

# Hydraulic Schematic

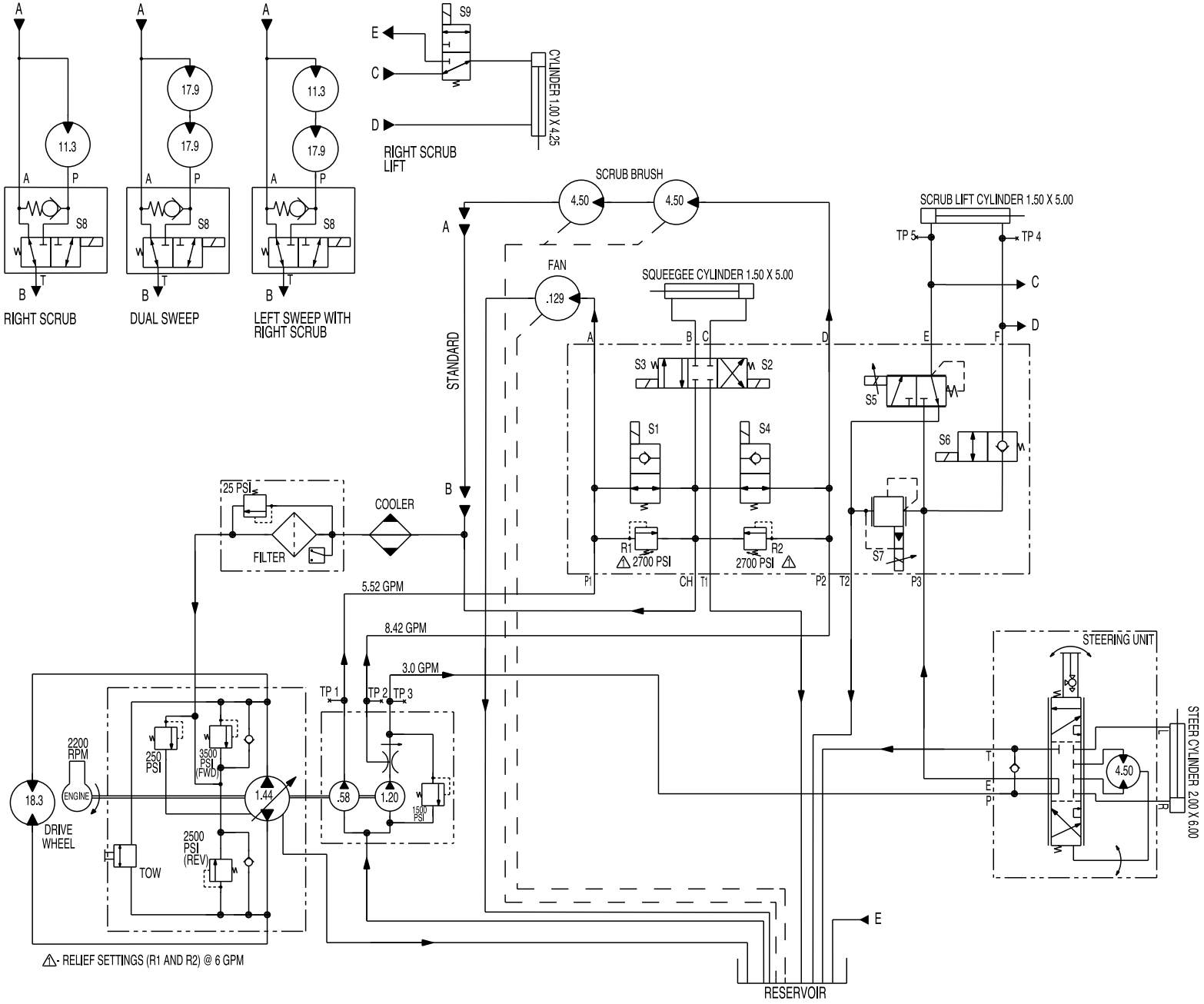

# Component Locations

## Major Components

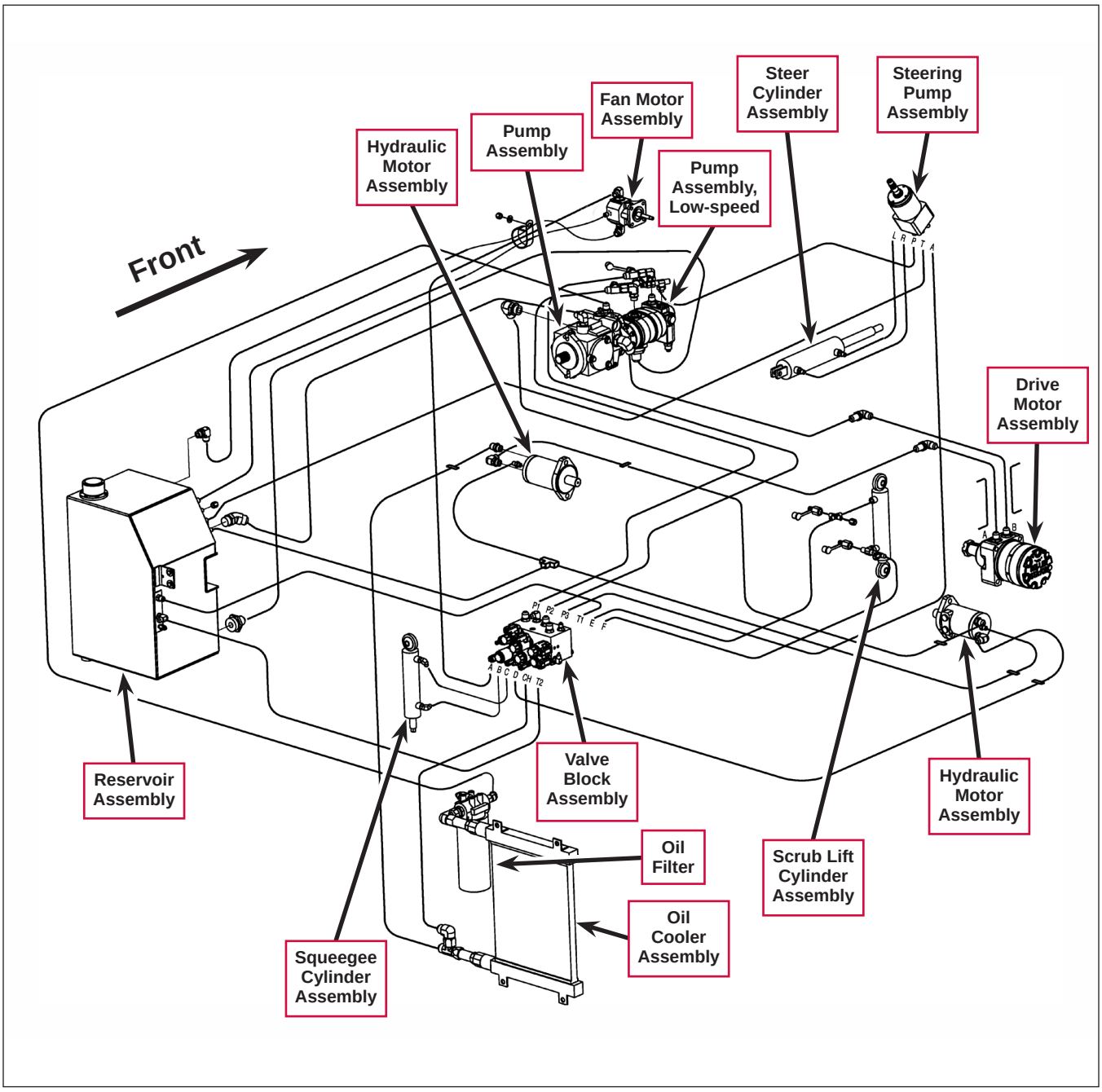

## *Hydraulic Cylinders*

The **Squeegee Cylinder Assembly**, **Steer Cylinder Assembly** and **Scrub Lift Cylinder Assembly** are located as shown.

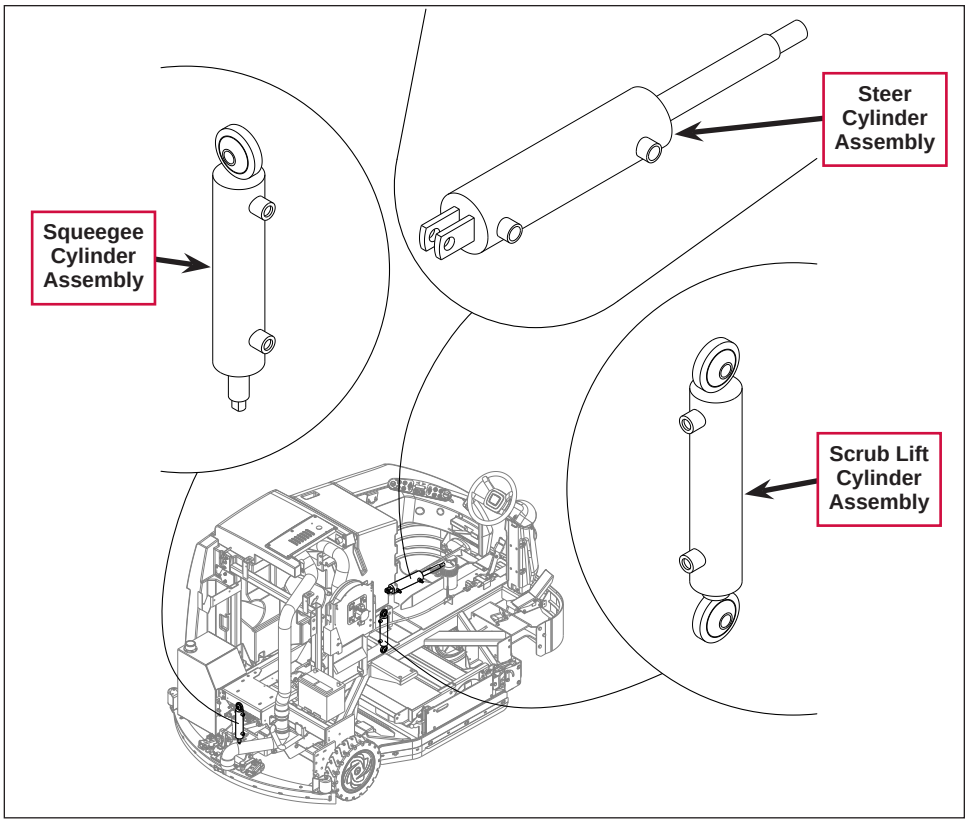


## *Hydraulic Motors*

The **Vacuum Fan Motor Assembly**, **Steering Pump Assembly**, **Drive Motor Assembly** and **Main Brush Motor Assembly** are located as shown.

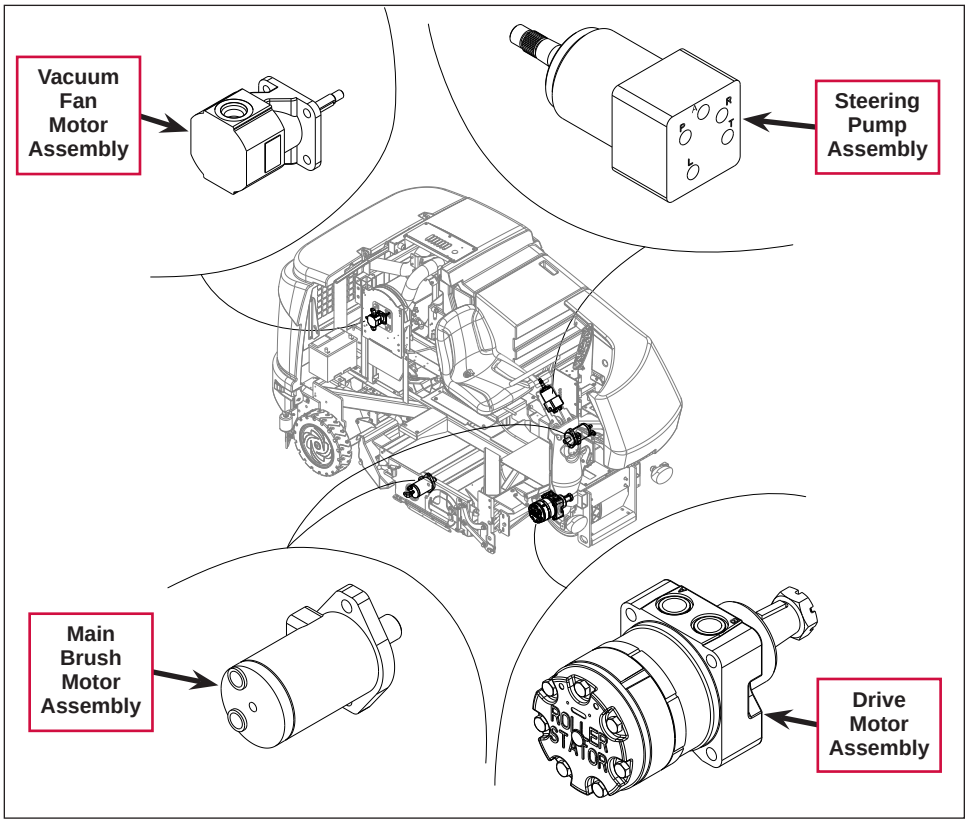

## *Hydraulic Pumps*

The **Propulsion (transport) Piston Pump Assembly** and **Accessory Pump Assembly** are connected to the engine output shaft and are located as shown. The **Accessory Pump Assembly** includes the two auxiliary hydraulic pumps.

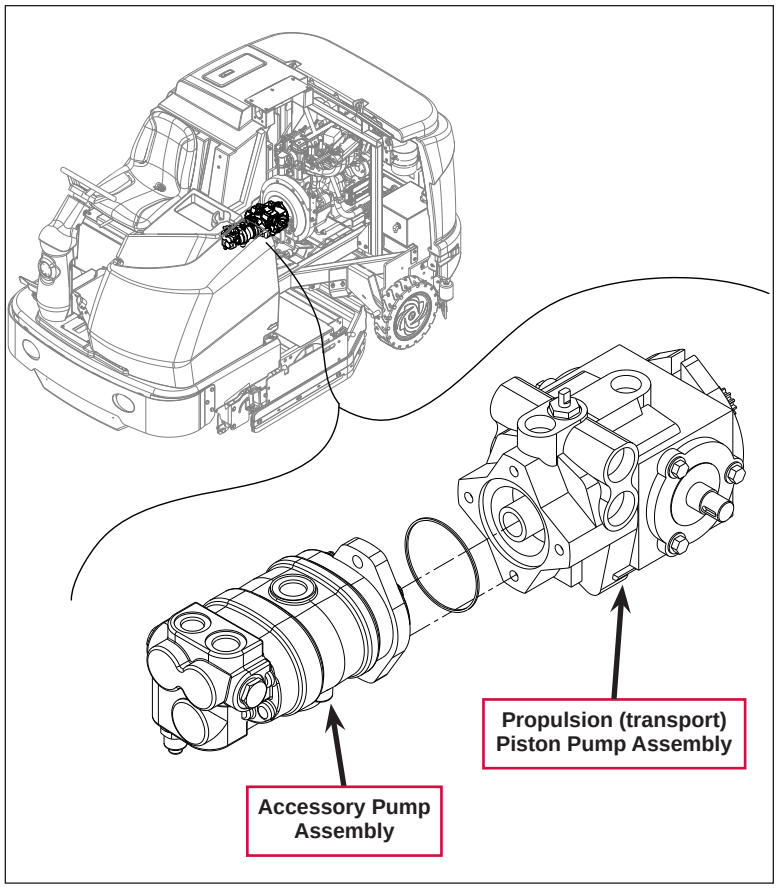


## *Hydraulic Valve Block/Manifold*

The **Hydraulic Valve Block/ Manifold** is located on the back of the machine as shown

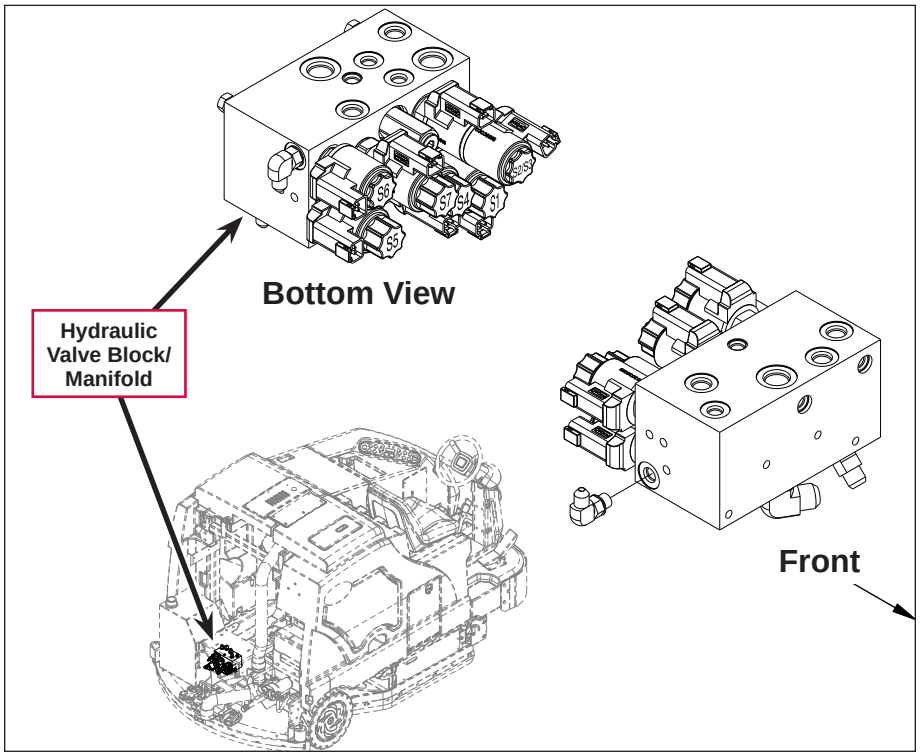

The **Solenoid Valves** and **System Relief Valves** are located on the **Hydraulic Valve Block/Manifold** as shown.

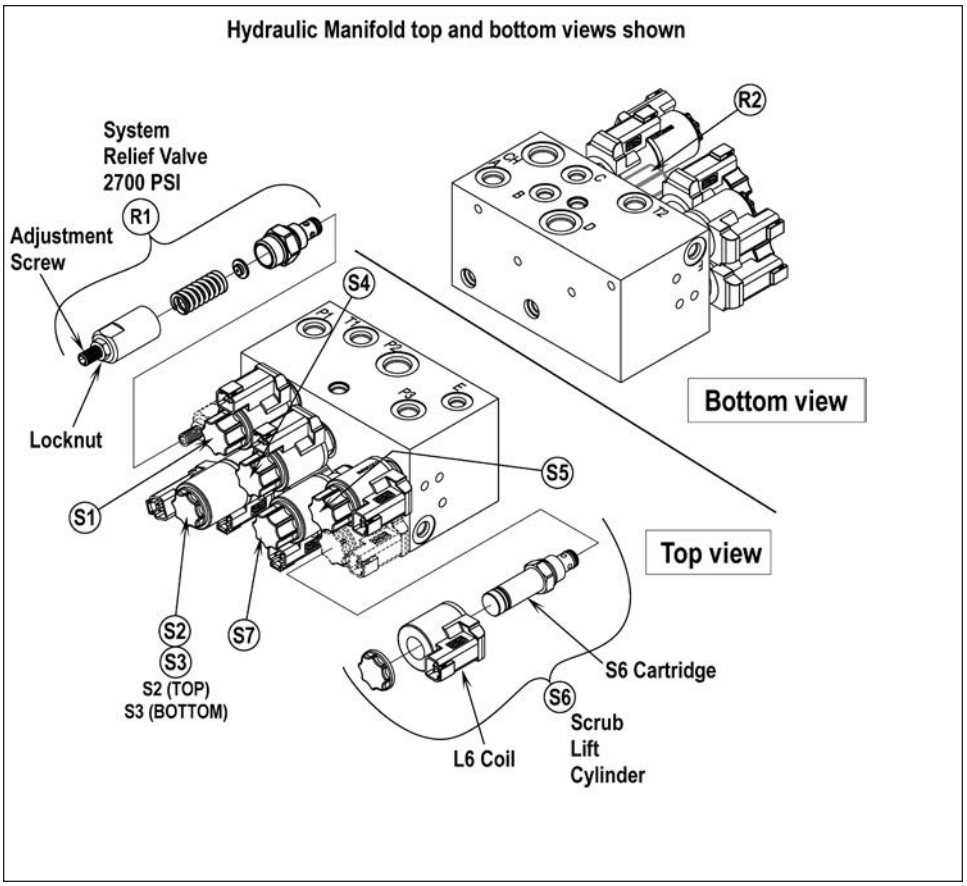


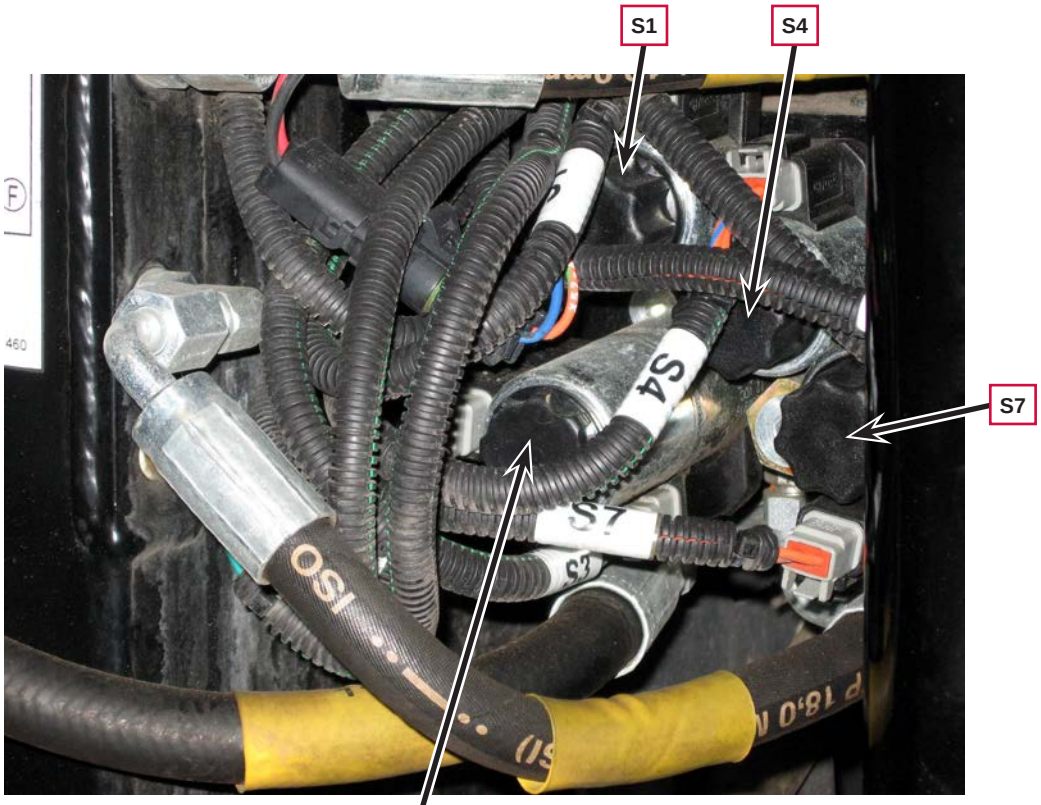

The **Right Side Scrub/Sweep Solenoid Valve S8/L8** controls the right side scrub/sweep motor(s). **S8/L8** is located above the front end of the **Scrub Deck**.

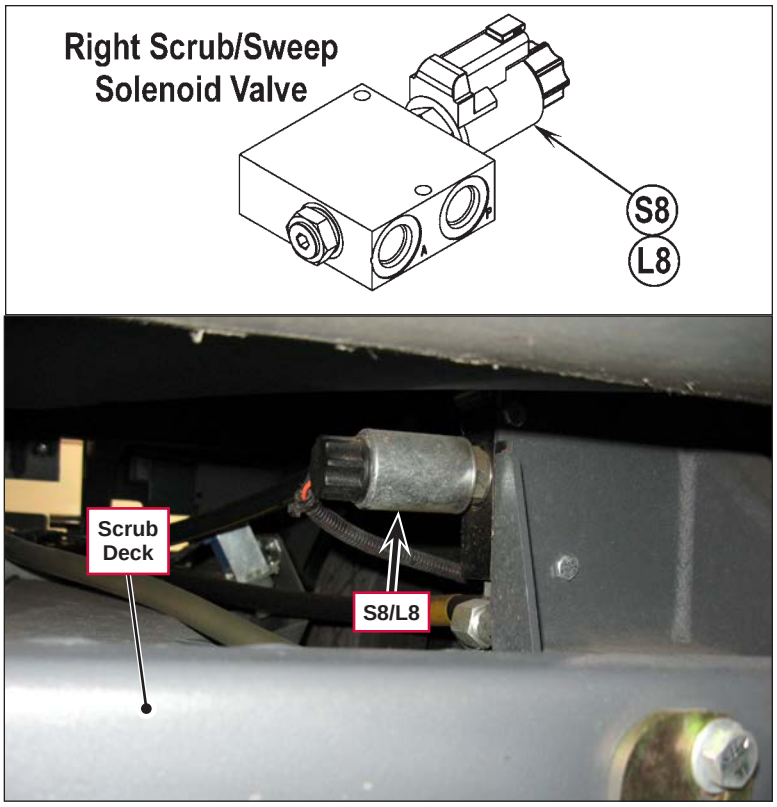


The **Right Side Scrub Lift Cylinder Solenoid Valve S9/L9** controls the side scrub lift cylinder. **S9/L9** is located inboard of the **Right Scrub Assembly**.

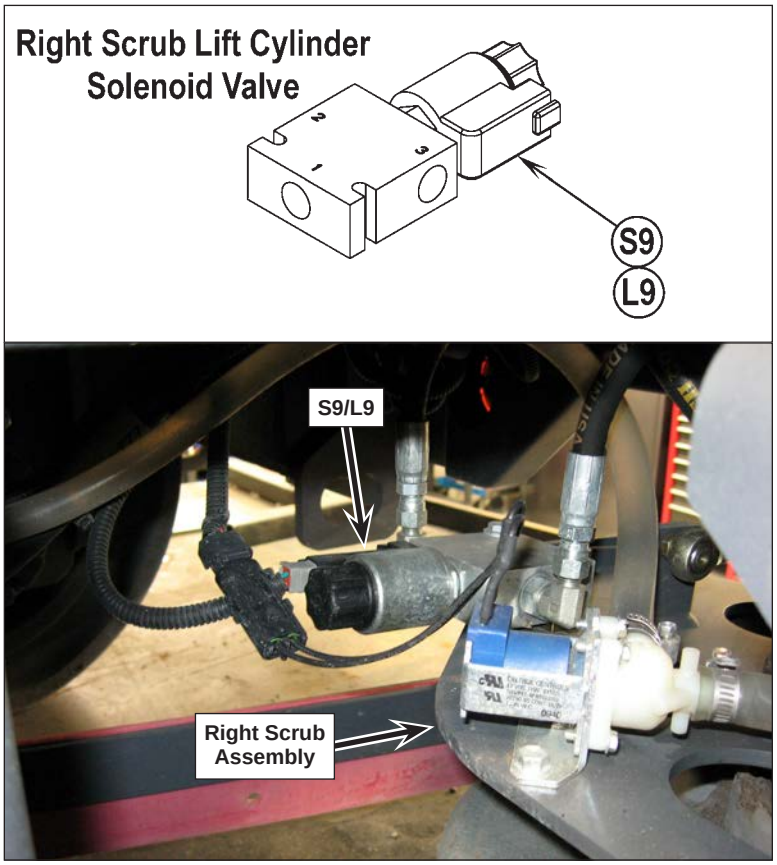

## *Hydraulic Manifold Assembly Component Location Key*

| Item# | Component Description and Hydraulic Circuit Function |
|---|---|
| LI/S1 | Solenoid coil and valve cartridge, vacuum fan motor, coil 8 ohms |
| L2/S2 | Solenoid coil and valve cartridge, squeegee lift cylinder DOWN (top), coil 8 ohms |
| L3/S3 | Solenoid coil and valve cartridge, squeegee lift cylinder UP (bottom), coil 8 ohms |
| L4/S4 | Solenoid coil and valve cartridge, scrub/sweep system motors, coil 8 ohms |
| L5/S5 | Solenoid coil and valve cartridge, scrub pressure DN, proportional relief, coil 2.2 ohms |
| L6/S6 | Solenoid coil and valve cartridge, scrub lift cylinder lock, coil 8 ohms |
| L7/S7 | Solenoid coil and valve cartridge, scrub pressure UP, proportional relief coil 2.2 ohms |
| R1 | Solenoid coil and valve cartridge, pressure relief, vacuum fan, 2700 psi |
| R2 | Solenoid coil and valve cartridge, pressure relief, scrub brush(s), 2700 psi |
| L8/S8 | Solenoid coil and valve cartridge, right scrub/sweep system, coil 8 ohms |
| L9/S9 | Solenoid coil and valve cartridge, right scrub lift cylinder, coil 8 ohms |



***Note:*** *The combined electrical solenoid and hydraulic valve cartridge assembly can be serviced separately.*



***Service Notes:*** *The S1, S2, S3, S4 and S6 solenoid coils w/connectors are the same, and the S5 and S7 solenoid coils w/connectors are the same, and can be swapped for troubleshooting purposes.*

*The S8 and S9 solenoid coils w/connectors are both different and only one of each is used.*

*The S1 and S4 valve cartridges are the same, the S2 and S3 valve cartridges are the same, and can be swapped for troubleshooting purposes.*

*The S5, S6, S7, S8 and S9 valve cartridges are all different and only one of each is used.*

# Maintenance and Adjustments

***Warning! Before performing any machine maintenance or adjustments, make sure the key switch is off, the key is removed from the machine and the parking brake is engaged.***

## Hydraulic Oil

1. Open and prop the engine cover to access the **Hydraulic Oil Reservoir**.
2. Remove the **Fill Cap** from the tank and look to the bottom of the filler screen. If the oil level is below the bottom of the filler screen, add 10W-30 motor oil until the bottom of the filler screen is covered. (The oil level should not be higher than ½" [12.7 mm] above the bottom of the filler screen.)
3. Change and flush the oil if major contamination from a mechanical failure occurs.

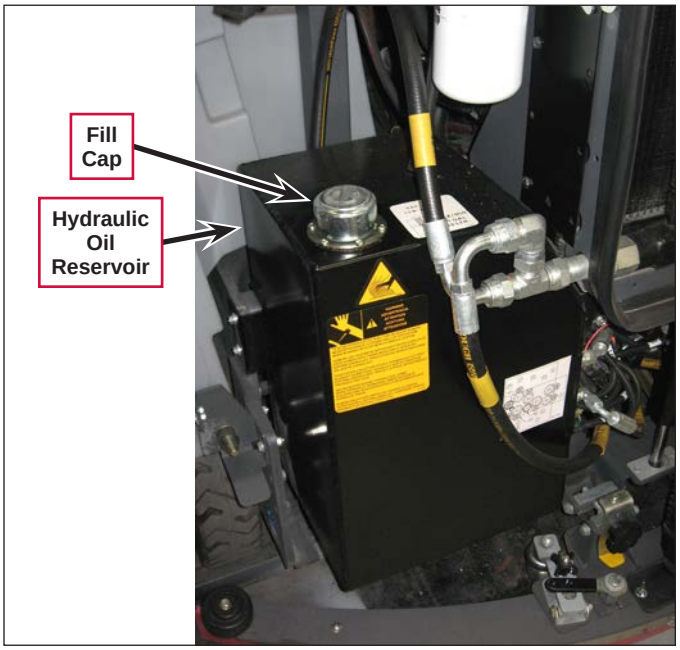


## Hydraulic Oil FIlter

1. Release the latches and tip the **Hydraulic Oil Cooler** out away from the machine.
2. Use a pan or other suitable container to catch any oil that may leak out when you remove the **Hydraulic Oil Filter**.
3. Unscrew and remove the **Hydraulic Oil Filter**.
4. Install the new **Hydraulic Oil Filter**.
5. Tip the **Hydraulic Oil Cooler** back up into position, then secure the latches.
6. Run the machine for a short time, then check the oil level in the hydraulic oil reservoir. Add oil as necessary.

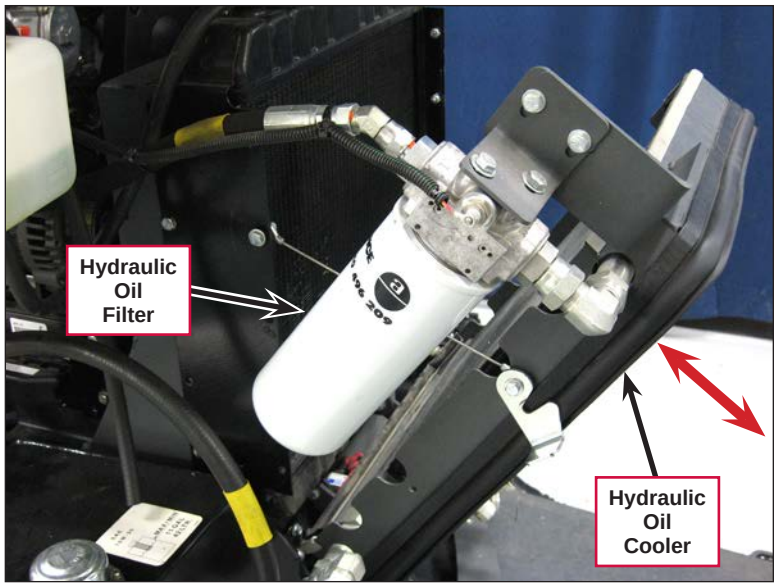

# Troubleshooting

## General Troubleshooting

| Problem | Cause | Correction |
|---|---|---|
| Fault code 34 displayed on the LCD | Hydraulic temperature fault that sets when hydraulic oil temperature exceeds 220 F for 15 seconds. | Clean the cooling fins on the hydraulic oil cooler to ensure adequate airflow through the cooler. |
| Fault code 39 displayed on the LCD | Hydraulic filter fault, sets to warn operator that oil filter is plugged and needs to be replaced.<br><br>Note: Only activates when oil temperature is above 100 degrees F (this prevents false signal upon cold engine start up). | Replace hydraulic oil filter. |

## General Information Regarding Checking Hydraulic Pressures

Accurate measurements are the key to troubleshooting a hydraulic system. Once you obtain accurate measurements you can compare them to the specifications to analyze a problem.

You can use digital tachometers, flow gauges or pressure gauges to troubleshoot the hydraulic system. The pressure gauge should have a range of 0 to 3000 psi (see the ***Special Tools*** section) and have a Parker Diagnostics connector number PD222. The most convenient way to check for oil flow is to check the RPM of the motor that is performing poorly. Refer to the ***Specifications*** tables to determine the motor RPM. If the motor speed is correct, the pump is producing the correct amount of oil flow. However, this does not mean that if a motor is running too slow the problem is in the pump.

The following information should be used to check for correct motor RPM, system pressure and relief valve settings. The readings are nominal figures and there will be variations due to manufacturing tolerances and system oil temperature. If any reading varies greater than 20 percent, there will be a noticeable loss of performance and the problem should be corrected.

## Test Port Nominal Pressure Readings



***Note:*** *See the figure on the following page and the* ***Specifications*** *tables.*
*100 psi = 6.9 bar.*

1. Insert the pressure gauge into the test port.



***Note:*** *The Lower Test Port (TP 4) on the Scrub Lift Cylinder is easier to access if you lower the scrub deck.*

2. Run the engine in high throttle position (2200 RPM) and allow the hydraulic oil to warm up.
   - The bypass pressure is the pressure reading with no motor or cylinder operating.
   - The operational pressure is the pressure range in which the motor or cylinders will operate.
   - A much lower than normal bypass pressure could indicate a gear pump problem.
   - If the bypass pressure remains the same after turning the function on, there could be a problem in the control valve or circuit.

- If the operational pressure is within range but the motor speed is too slow, the problem could be in the motor.
- If the broom motor operational psi reading is above the bypass psi but is below the operational psi, check the broom adjustment and wear.
- Check the individual system ***Troubleshooting*** sections of this manual for additional information.

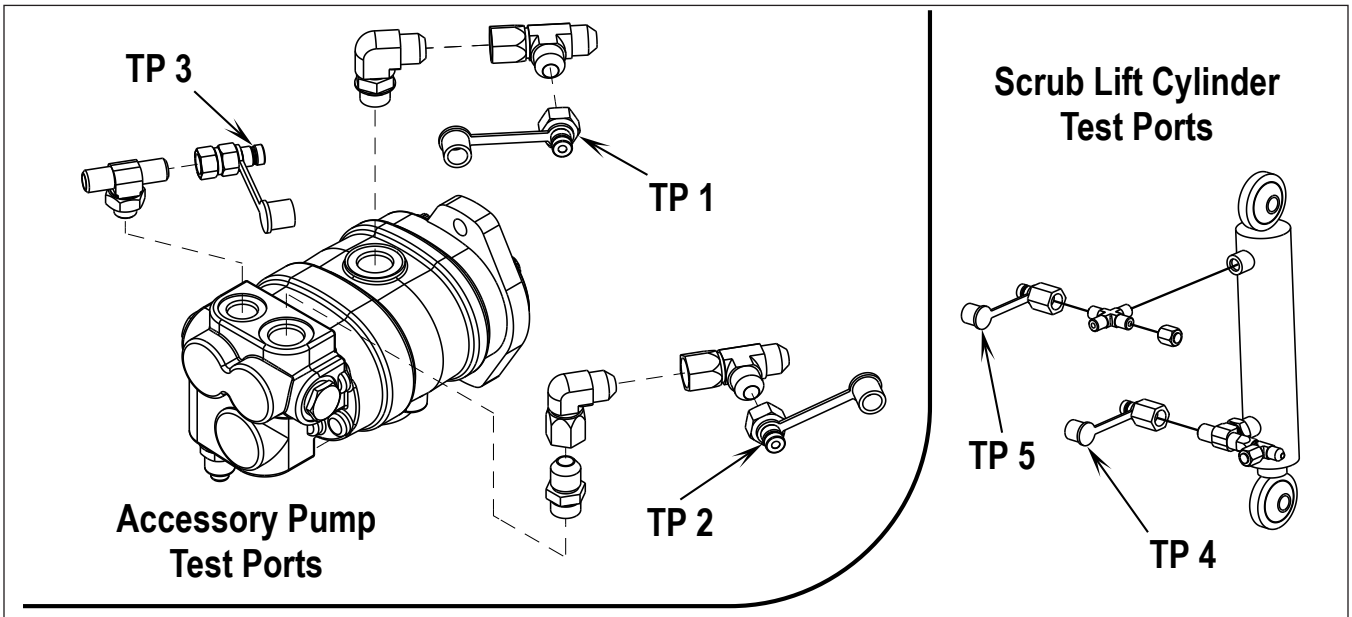


**Upper Test Port (TP 5) on the Scrub Lift Cylinder**

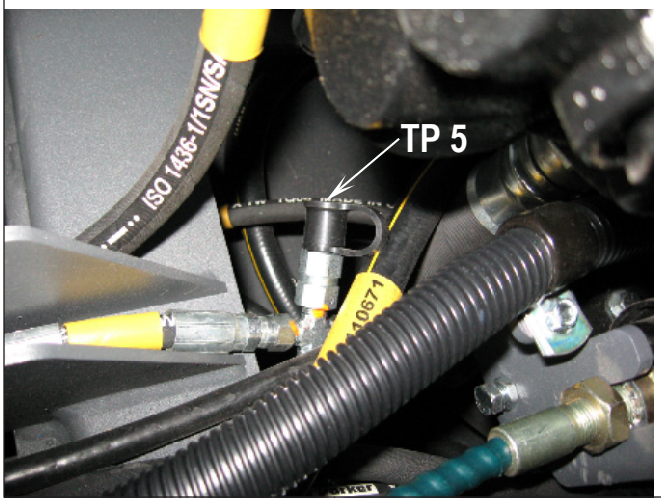


**Lower Test Port (TP 4) on the Scrub Lift Cylinder**

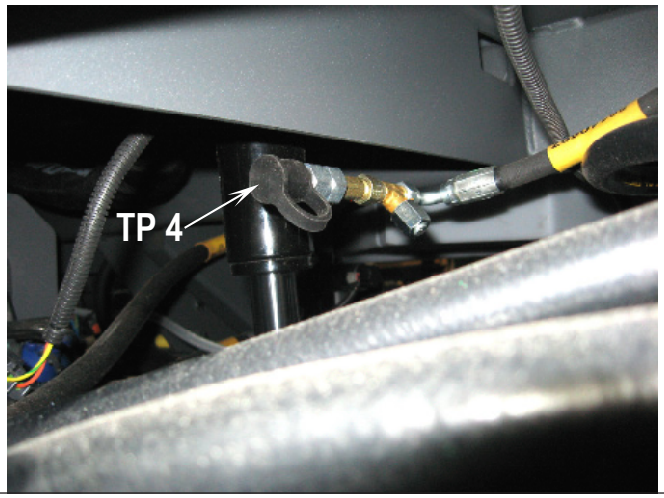

## *Specifications*

| Component | Specifications | |
|---|---|---|
| Reservoir capacity | 10 gal. [37.8 L] | |
| Fluid type | 10W-30 engine oil | |
| Propulsion (Wheel Drive) Hydraulic Pump Ratings | Type – manually-variable displacement, axial piston | |
| | Displacement – 1.44 CIR | |
| | Speed – 3600 RPM max. | |
| | Continuous pressure – 3000 PSI max. | |
| | Relief Setting | Forward – 3500 PSI |
| | | Reverse – 2500 PSI |
| | Charge Relief – 200-250 PSI | |
| Dual Low-speed (Accessory) Hydraulic Pump Ratings | Displacement | Front – 0.58 CID |
| | | Rear – 1.20 CID |
| | Speed – 3200 RPM max. | |
| | Rated Pressure – 3000 PSI | |
| | Max. Pressure – 3500 PSI | |
| | Relief Pressure – 1500 PSI on priority flow | |

| Accessory Pump 1 Circuits | Displacement Cu. In. | GPM | RPM In | RPM Out | PSI | Relief PSI |
|---|---|---|---|---|---|---|
| Accessory pump 1, engine @ 2200 RPM no systems running (test port TP1) | .58 | 5.52 | 2200 | | * 120 | 2700 |
| Vacuum Fan motor (open fan) | .129 | 5.52 | | 8600 | 2040 | 2700 |
| Vacuum water lift sealed @ 2200 RPM: 33.7 in/$H_2O$ | | | | | | |

| Accessory Pump 2a Circuits | Displacement Cu. In. | GPM | RPM In | RPM Out | PSI | Relief PSI |
|---|---|---|---|---|---|---|
| Accessory Pump 2a non-priority branch, engine @ 2200 RPM, no systems running (test port TP2) | 1.20 | 8.42 | 2200 | | *370 | 2700 |
| Main scrub brush motors (only) setting (A) no load broom off floor and ** scrub setting #3 pressure (test port TP1) | 4.5 | | | 415<br>400 | A 850<br>1700** | |
| Main scrub and RT side scrub motors #3 pressure (test port TP1) | | | | | 1880 | |
| Right side brush motor speed | 11.3 | | | 160 | | |
| Main scrub and dual sweep (test port TP2) | | | | | 1780 | |
| Side sweep broom motor speed | 17.9 | | | 100 | | |
| Main scrub, RT scrub and LT sweep (test port TP2) | | | | | 1950 | |
| Squeegee cylinder 1.50 x 5.00 | | | | | 315 | |

| Accessory Pump 2b Circuits | Displacement Cu. In. | GPM | RPM In | RPM Out | PSI | Relief PSI |
|---|---|---|---|---|---|---|
| Accessory Pump 2b priority branch, engine @ 2200 RPM no systems running (test port TP3) | 1.20 | 3.0 | 2200 | | * 296 | 1500 |
| Steering unit (driving and turning) | 4.5 | | | | 500 | |

* The bypass pressure is the pressure reading with no motor or cylinder operating (flow-through).

** Scrub brush system hydraulic pressure under load setting #3 (maximum scrub pressure)

| | Test Port | Pressure Type | Controlled by | Pressure Setting | PSI |
|---|---|---|---|---|---|
| Scrub lift cylinder 1.50 x 5.00, engine at 2200 RPM | TP4 | Lift Pressure | Proportioning Valve S7 | 1 | 750 - 774 |
| | | | | 2 | 750 - 767 |
| | | | | 3 | 745 - 779 |
| | TP5 | Down Pressure | Proportioning Relief Valve S5 | 1 | 333 - 346 |
| | | | | 2 | 393 - 412 |
| | | | | 3 | 458 - 499 |

| Propulsion Pump Circuits | Displacement Cu. In. | GPM | RPM In | RPM Out | PSI | Relief PSI |
|---|---|---|---|---|---|---|
| Hydrostatic pump charge pressure | | | | | 250 | |
| Hydrostatic pump | 1.44 | 13.7 | 2200 | | | |
| Forward drive wheel motor speed test @ 8 mph level ground, smooth concrete, no accessory systems running, foot at full speed forward, set 153 RPM @ 2400 RPM | 18.3 | | | FWD 153 | 1060@ 2200 RPM<br>1200@ 2400 RPM | F 3500 |
| Reverse same as above @ 4 mph, set 78 RPM @2400 RPM | | | | REV 78 | | R 2500 |

| **Hydraulic Reservoir Capacity** | | |
|---|---|---|
| Hydraulic reservoir capacity: | 10 gallons | Oil Type: 10W-30 |

| **Hydraulic Truth Table** | | | | | | | | | |
|---|---|---|---|---|---|---|---|---|---|
| Electrical Solenoid's Energized Status – Component to Operate | | | | | | | | | |
| Solenoid Functions | S1 | S2 | S3 | S4 | S5 | S6 | S7 | S8 | S9 |
| Recovery Tank Fan | X | | | | | | | | |
| Squeegee Down | | X | | | | | | | |
| Squeegee Up | | | X | | | | | | |
| Scrub Brushes On | | | | X | | | | | |
| Scrub Brush Pressure Setting Regular #1 | | | | | X | X | X | | |
| Scrub Brush Pressure Setting Heavy #2 | | | | | X | X | X | | |
| Scrub Brush Pressure Setting Extreme #3 | | | | | X | X | X | | |
| Right Side Scrub Brush Pressure Settings 1, 2 and 3 | | | | | X | X | X | | X |
| Scrub Brushes Off | | | | | | | | | |
| Right Scrub On | | | | X | | | | X | |
| Dual Side Broom Sweep On | | | | X | | | | X | |

| **SAE (JIC) 37° Flare Fitting Torque Chart** | | | |
|---|---|---|---|
| **SAE Dash** | **Thread Size** | **Torque in ft-lbs.** | **FFWR*** |
| - 4 | 7/16" - 20 | 11 | 2 |
| - 5 | 1/2" - 20 | 14 | 2 |
| - 6 | 9/16" - 18 | 20 | 1-1/4 |
| - 8 | 3/4" - 16 | 43 | 1 |
| - 10 | 7/8" - 14 | 55 | 1 |
| - 12 | 1-1/16" - 12 | 80 | 1 |
| - 14 | 1-3/16" - 12 | 100 | 1 |
| - 16 | 1-5/16" - 12 | 115 | 1 |
| - 20 | 1-5/8" - 12 | 160 | 1 |
| * FFWR - Flats From Wrench Resistance | | | |

## *Special Tools*

| | |
|---|---|
| Hydraulic test gauge w/connector, 3000 psi range, p/n 56504516 |  |

# *Options and Accessories*

| Description | Illustration |
|---|---|
| **Detergent Bottles** |  |
| **Back-up Alarm Kit**<br><br>The Back-up Alarm Kit includes the Back-up Alarm Unit, Pigtail Wire Assembly and mounting hardware. | 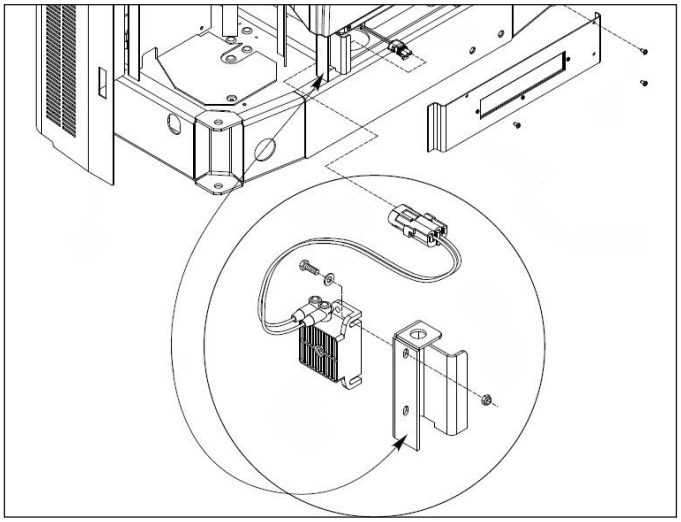 |
| **Warning Beacon Kit**<br><br>The Warning Beacon Kit mounts directly on the machine and is designed for machines without an overhead guard. |  |

| Description | Illustration |
|---|---|
| **Overhead Guard Beacon Kit**<br><br>The Overhead Guard Beacon Kit mounts onto the overhead guard. |  |
| **Brake/Signal Light Kit**<br><br>The Brake/Signal Light Kit includes amber front signal lights, red rear stop/signal lights and wiring harnesses. |   |
| **Extended Scrub Kit**<br><br>The Extended Scrub Kit includes the extended scrub pump, float switch and strainer, and the electrical and solution quick-disconnects |   |
| **Fire Extinguisher Kit** |  |

| Description | Illustration |
|---|---|
| **Foot Guard Kit** |  |
| **Roller Bumper Kit**<br><br>Note that the right side roller bumper is standard on Condor XL 60” and 67” with right side scrub. |  |
| **Wash Hose Kit**<br><br>(shown mounted behind Operator seat) |  |
| **Overhead Guard Kit**<br><br>(warning beacon sold separately) |  |

| Description | Illustration |
|---|---|
| **Overhead Guard Canopy Kit**<br>(overhead guard sold separately) | 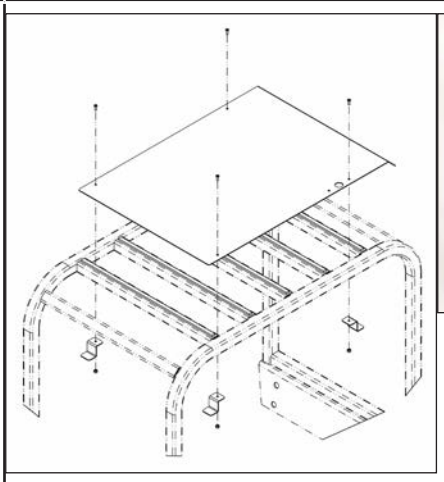  |
| **Rear Bumper Kit** | 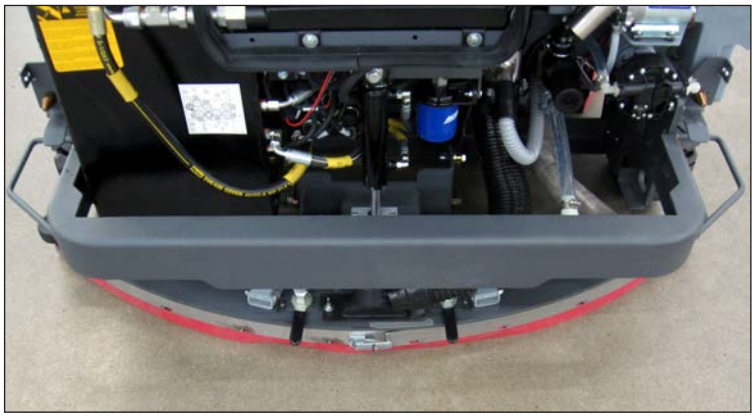 |
| **Recovery Tank Clean-out Kit** |  |
| **Recovery Tank Debris Tray Kit** |  |

| Description | Illustration |
|---|---|
| **Drain Hose Extension** |  |
| **Remote Foot-actuated Horn Switch Kit** |  |
| **Solution Auto-fill Kit** | 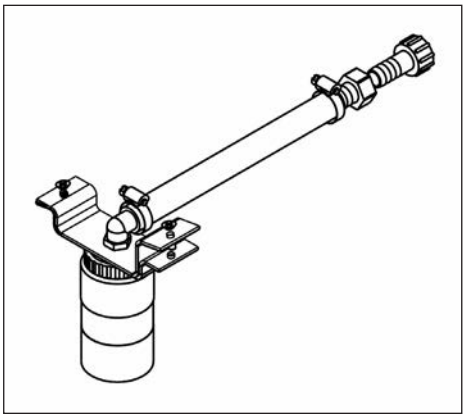 |
| **Right-hand/Dual Armrest Kit**<br>**Seat Belt Kit for Standard Seat** |  |

| Description | Illustration |
|---|---|
| **Deluxe Suspension Seat Kit**<br><br>(includes right-hand armrest and seat belt) |  |
| **Under Hood Light Kit**<br><br>(includes trouble light with magnetic base on an extendable cable) |  |
| **Vacuum Wand Kit**<br><br>(shown mounted on machine) |  |

# Recovery System

## Functional Description

### System Overview

The recovery system picks up the scrubbing solution from the floor and directs it to the recovery tank. The vacuum fan, powered by an auxiliary hydraulic motor driven by the engine, draws air from the recovery tank to create a vacuum in the tank and at the squeegee to pick up the solution. The solution travels through the squeegee hose and into the recovery tank.

The vacuum fan motor switches on automatically when the scrub system is enabled and the machine moves forward. The motor will switch off after a predetermined time delay once machine motion stops.

The vacuum fan motor can also be switched on independent of the scrub system by pressing the vacuum switch (old style control panel) or the vacuum/wand switch (new style control panel). This is used to pick up solution already on the floor, or when using a wand on the squeegee hose.

Refer to the ***Squeegee System*** section for more information on the squeegee components and operation.

### Recovery System Wiring Diagram

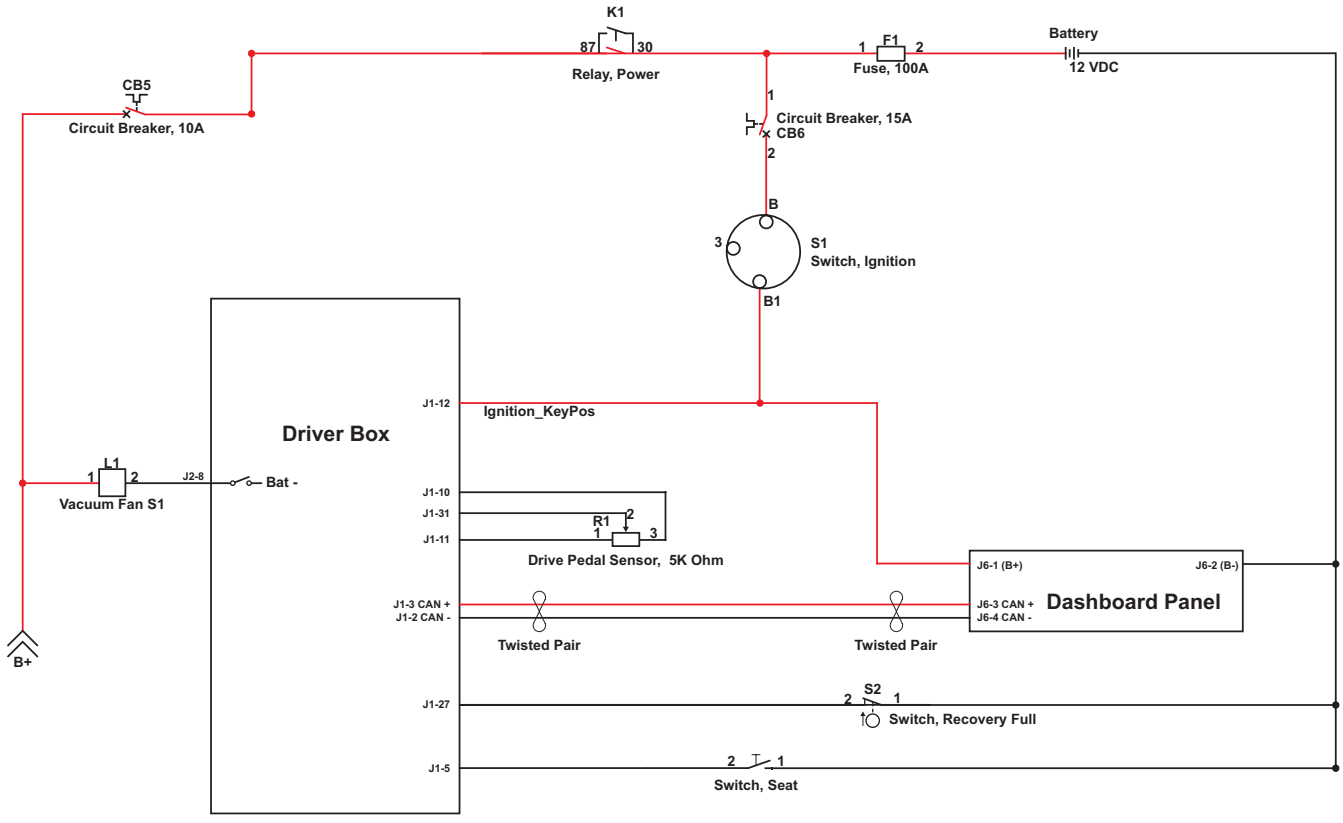

## Electrical Circuit Description

The Vacuum Fan Solenoid Valve **S1** controls the hydraulic oil flow to the fan motor. Note that **S1** is not a proportional valve and is either on or off. The following conditions must be met for **S1** to energize and allow hydraulic oil to flow to the vacuum fan motor:

- The **Driver Box** must receive a signal from the **Dashboard Panel** via the CAN Bus that the Operator has actuated the recovery system.
- The **Driver Box** must receive a signal from the **Drive Pedal Sensor R1** that the drive pedal has been moved from the neutral position.
- The **Recovery Full Switch S2** must be closed (recovery tank not full).

## Recovery System Hydraulic Diagram

An electric solenoid, **S1**, controls the hydraulic **Vac Fan Control Valve** (L1) which controls the hydraulic oil flow to the vacuum fan motor.

### Vacuum Fan Off

In the normally-off condition, the **S1 Vacuum Fan Control Valve** is de-energized (**Solenoid Off**). This allows the hydraulic oil to flow from the **Aux.** (auxiliary) **Pump** through **S1** to the **Filter** and **Propulsion Pump Charge Port**, bypassing the **Vacuum Fan** motor.

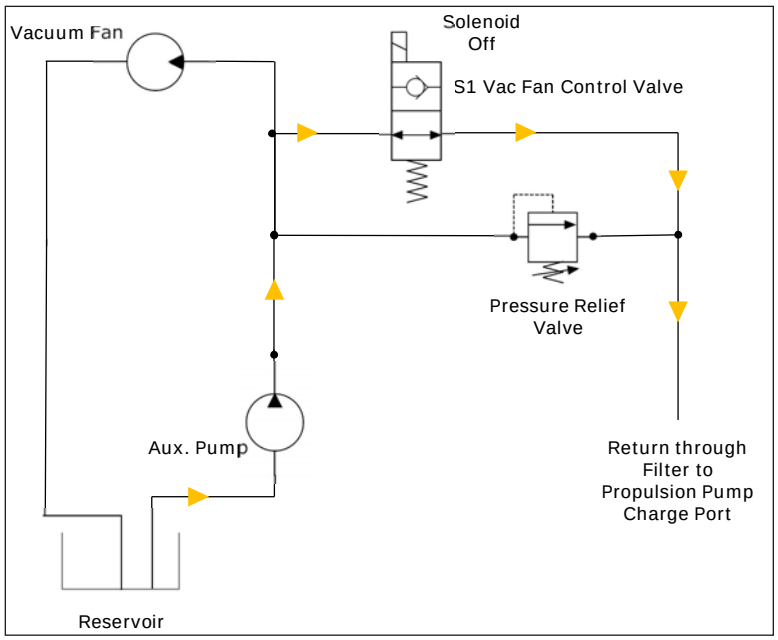

### *Vacuum Fan On*

When the vacuum fan is switched on, the **S1 Vacuum Fan Control Valve** is energized (**Solenoid On**) to direct the hydraulic oil flow from the **Aux.** (auxiliary) **Pump** through the **Vacuum Fan** motor, then to the **Reservoir**.

The **Pressure Relief Valve** will open to allow the oil to flow back into the **Propulsion Pump Charge Port** if a high-pressure condition occurs in the hydraulic lines before the oil enters the tank, (stalled motor, plugged hose, etc.).

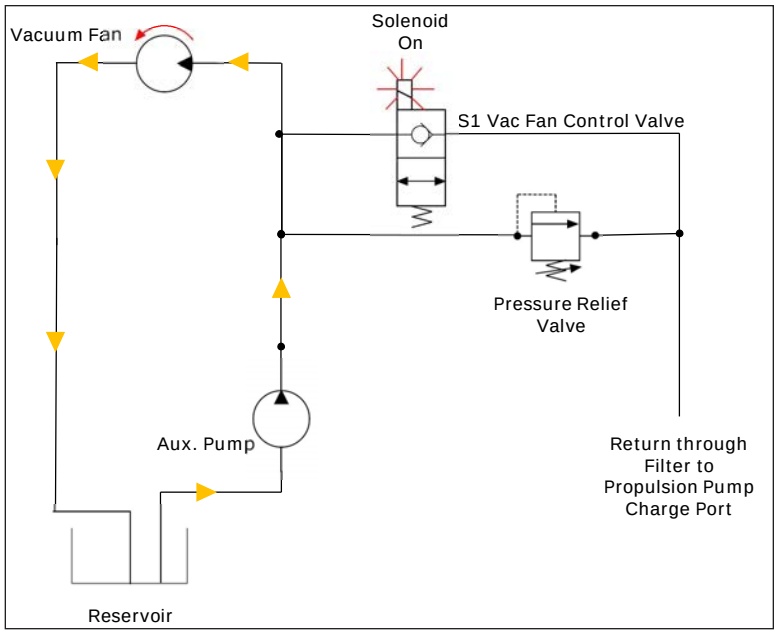

# Component Locations

## Recovery Tank

The **Recovery Tank** is on the left rear side of the machine.

The **Vacuum Fan Assembly**, driven by a hydraulic motor, is located on the right side of the machine. The **Vacuum Fan Assembly** pulls air through the **Vacuum Hose** which is connected to the **Recovery Tank**. The airflow creates the vacuum needed to pull the wastewater from the squeegee and **Squeegee Hose Assembly**, through the **Cuffed Hose Assembly** and into the **Recovery Tank**.

The **Recovery Tank Cover Assembly** opens to allow access to the inside of the **Recovery Tank**, and to the **Vacuum Fan Assembly** and hoses. The **Recovery Tank Cover Assembly** seals on the **Recovery Tank** when closed to maintain the vacuum inside of the **Recovery Tank**.

The **Drain Hose** allows you to empty the **Recovery Tank**.

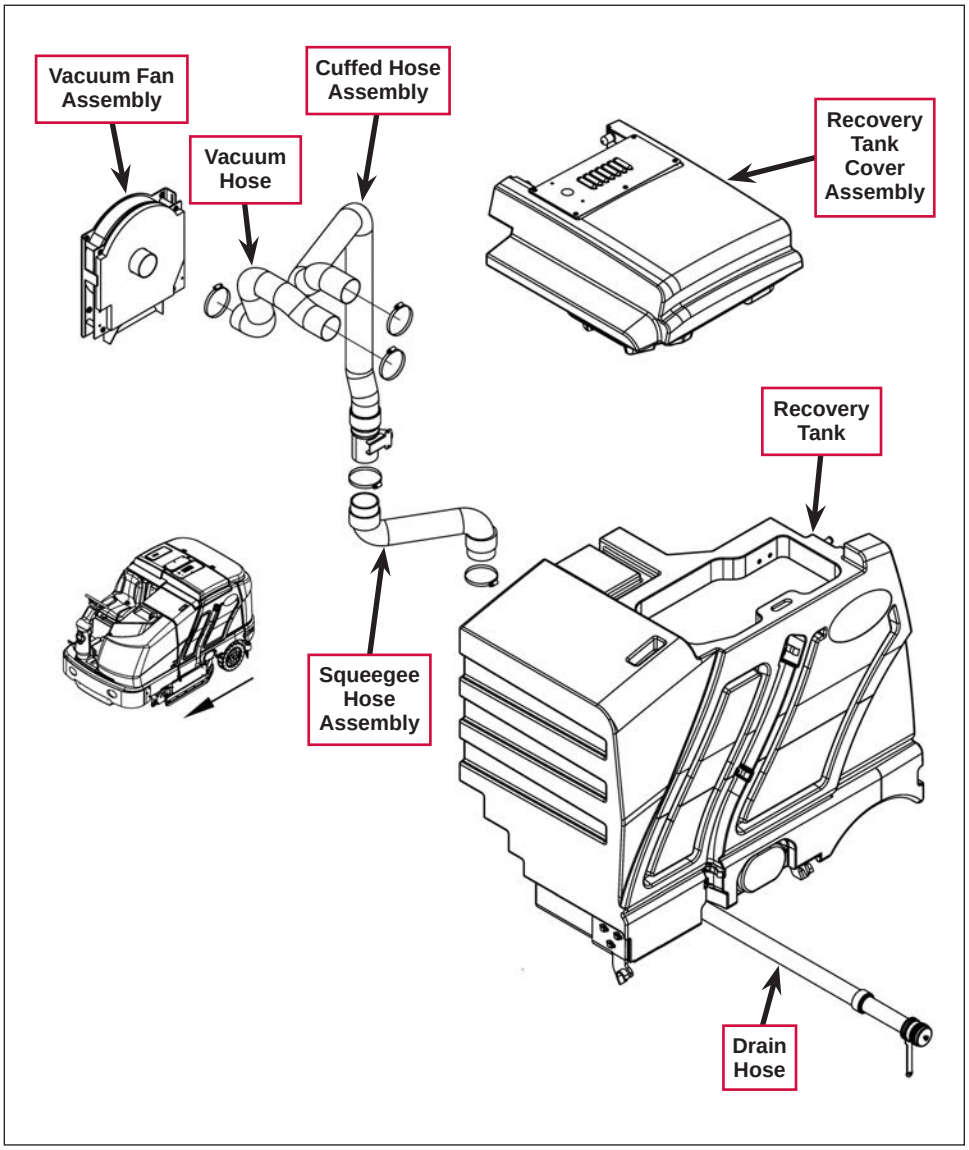

## Daily Maintenance

***Warning! Before performing any machine maintenance, make sure the key switch is off, the key is removed from the machine and the parking brake is engaged.***

- Check the gasket on the recovery tank cover for damage/wear.
- Check that the drain hose cap is sealed.
- Drain the recovery tank, then clean the inside of the tank by flushing with clean water.

## Troubleshooting

| Problem | Cause | Correction |
|---|---|---|
| Poor water pickup | Vacuum leak(s) due to:<br>• Leaky drain hose cap<br>• Leaky hose(s)<br>• Bad gasket<br>• Damaged tank | • Check the drain hose cap and tighten/replace as necessary.<br>• Check the squeegee and recovery tank hoses and tighten/replace as necessary.<br>• Check the vacuum hose and clamps between the vacuum fan assembly and the recovery tank and tighten/replace as necessary.<br>• Check the gaskets and replace as necessary.<br>• Check the recovery tank for damage. |
| | Restrictions due to built-up debris in the squeegee tool, vacuum hoses or float cage | 1. Check the squeegee tool, vacuum hoses and float cage for any accumulated dirt or debris and clean as necessary.<br>2. Check the vacuum system airflow pathway wherever the airflow is forced to make a sharp turn for any accumulated dirt or debris and clean as necessary. |
| | Squeegee out of adjustment | Readjust the squeegee as necessary (refer to the Squeegee Adjustment section in the Instructions For Use). |
| Vacuum fan motor not working | Vacuum fan solenoid over current (fault code 09 displayed) | • Check L1 the solenoid coil wiring for problems (+ GRN/BRN and - BRN/YEL).<br>• Check the solenoid coil resistance. If less than 6 ohms, replace the solenoid. Also see the ***Recovery System Wiring Diagram***. |

# Removal and Installation

***Warning!*** ***Before removing or reinstalling any machine components, make sure the key switch is off, the key is removed from the machine and the parking brake is engaged.***

## Recovery Tank

***Caution:*** ***The recovery tank is relatively heavy. It's recommended that the recovery tank be removed by two or more persons to prevent possible personal injury or damage to the recovery tank.***

1. Drain the recovery tank.

***Note:*** *If your machine is equipped with an extended scrub system, you must disconnect the Float Switch Quick-disconnect and Solution Quick-disconnect Coupler before you can remove the recovery tank. (Refer to the* ***Solution System/Functional Description/Extended Scrub System*** *subsection.)*

2. Press the **Skirt Latch** and swing the left-hand **Side Skirt Assembly** out of the way.
3. Lift and prop open the recovery tank cover assembly.

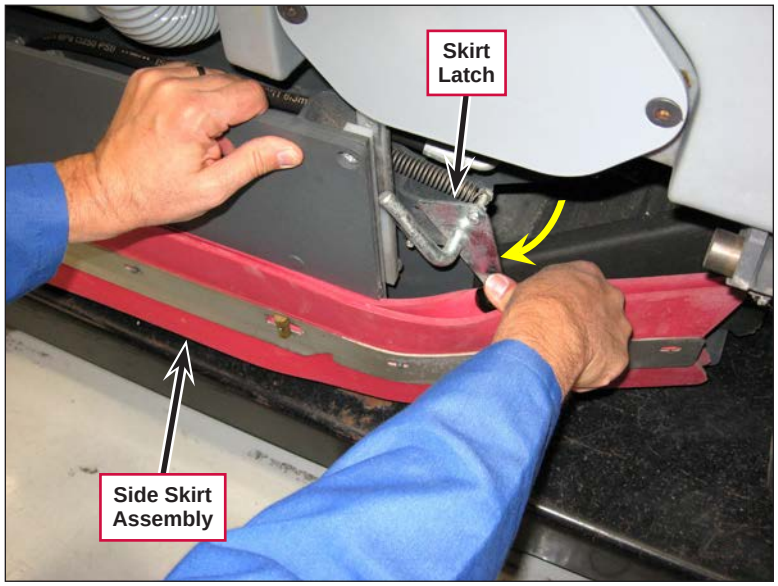


4. Press the **Recovery Tank Latch** and carefully tip the recovery tank out away from the machine.



5. Unhook the **Cable Assembly** from the **Recovery Tank**, then carefully swing the **Recovery Tank** down and lift it off of the machine.

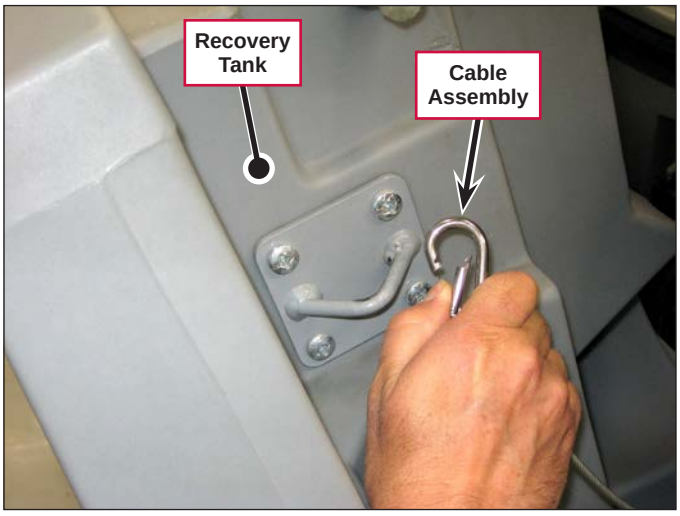


***Note:*** *When you reinstall the* ***Recovery Tank****, set the* ***Tank*** *onto the two* ***Mounting Pins*** *on the frame, then tilt the* ***Tank*** *up and reattach the* ***Cable Assembly****.*

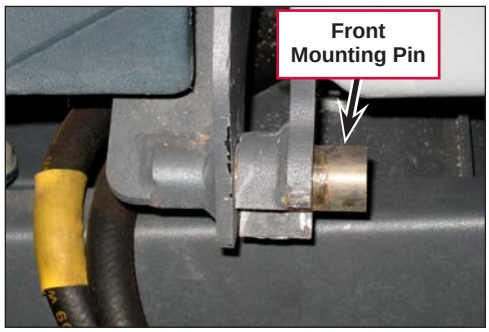


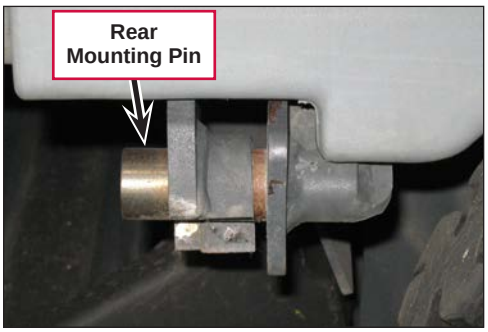

## *Specifications*

| Component | Specifications |
|---|---|
| Fan Assembly Motor | Shaft Rotation – Clockwise (as viewed from shaft end) |
| | Pressure Ratings:<br>• 3000 PSI – Continuous<br>• 4000 PSI –Intermittent |
| | Displacement – 0.129 CIR |
| Vacuum Water Lift (Sealed) | 33.7 inches $H_2O$ @ 2200 RPM |
| Vacuum Fan Solenoid Valve L1 | Current – 1.5 Amps |
| | Nominal Coil Resistance – 8 ohms |

## *Special Tools*

| |
|---|
| Vacuum water lift gauge, p/n 56205281 |

# Scrub System, Cylindrical

## Functional Description

### Overview

The cylindrical scrub system includes the main scrub deck and hopper, the two hydraulic brush motors, the hydraulic lift cylinder that lowers and raises the deck, and the associated hydraulic solenoid valves. The dual-displacement, low-speed (accessory) pump (1.20 CID) powers the two scrub brush motors and the hydraulic scrub lift cylinder.

The scrub lift cylinder is controlled by two proportioning hydraulic solenoid valves that work together, on opposite ends of the lift cylinder, to produce the desired main scrub deck pressure.

### Cylindrical Scrub System Wiring Diagram

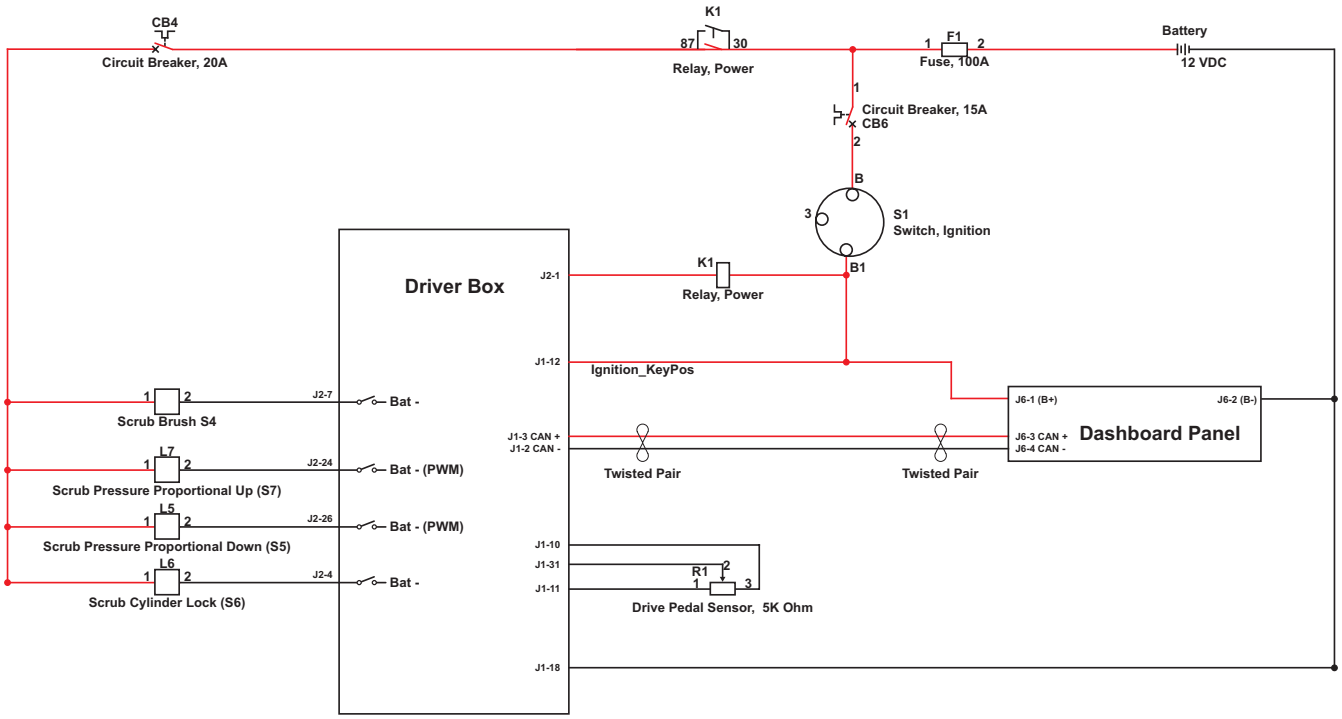


## Circuit Description

For the scrub system to work, the key switch must be on, the engine must be running and the **Driver Box** must receive a signal from the **Dashboard Panel** via the CAN Bus that the Operator has actuated the scrub system.

### *Scrub Brush Motors*

For the scrub brush motors to run:

- The **Driver Box** must receive a signal from the **Drive Pedal Sensor R1** that the drive pedal has been moved from the neutral position.
- The **Driver Box** must provide a ground at pin **J2-7** to energize the **Scrub Brush** solenoid valve **S4** which directs the hydraulic fluid to flow through the scrub brush motors.

### *Scrub Lift Cylinder*

For the scrub lift cylinder to actuate the scrub deck:

- The **Scrub Cylinder Lock** solenoid valve **S6** must open to allow oil to flow to and from the **Scrub Lift Cylinder**.
- The **Driver Box** must provide the appropriate ground signal from pin **J2-26** to the **Scrub Pressure Proportional Down** valve **S5**, and the appropriate ground signal from pin **J2-24** to the **Scrub Pressure Proportional Up** valve **S7** to provide the down scrub pressure selected by the Operator.

  Note that the **Driver Box** ground signals to **S5** and **S7** are pulse width modulated (PWM) signals which open the valves proportionally to produce the appropriate hydraulic pressures on both the piston and rod ends of the **Scrub Lift Cylinder**. This combination of up and down forces on the lift cylinder, combined with the weight of the cylindrical scrub deck, applies the correct amount of downward force on the scrub deck to produce the desired scrub pressure.

  Also note that the signals to the **S5** and **S7** valves allow the valves to “dither” (oscillate in a slight back-and-forth motion at high frequency) to prevent the valves from sticking.
- Once the scrub deck is retracted upward after scrubbing, the The **Scrub Cylinder Lock** solenoid valve **S6** closes to shut off the oil flow from the scrub lift cylinder to ensure that the deck remains retracted.

# Cylindrical Scrub System Hydraulic Diagrams

## Scrub Motors Off

When the scrub motors are off, the **Accessory Pump** (1.20 CID) sends oil to the **Priority Flow Divider** which directs the oil to the open **Scrub Brush Valve L4**. The oil travels through the **Scrub Brush Valve L4**, through the **Oil Cooler** and **Filter**. The oil then travels to the **Charge Circuit** and to the **Main Piston (propulsion) Pump**, where it goes through the case and returns to the **Reservoir**.

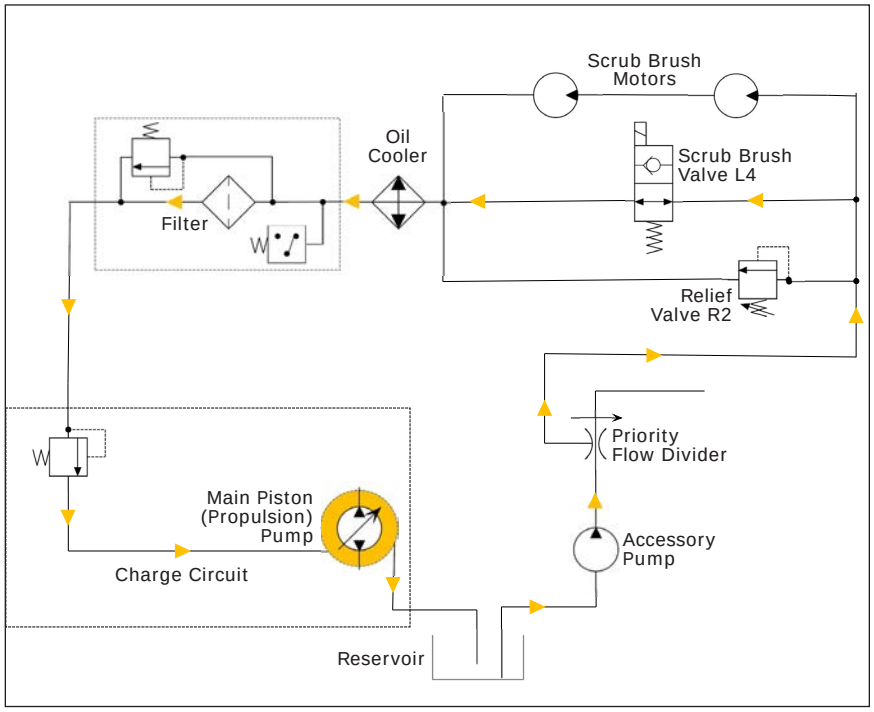


## Scrub Motors On

When the scrub motors are on, the **Accessory Pump** (1.20 CID) sends oil to the **Priority Flow Divider** which directs the oil to the energized (closed) **Scrub Brush Valve L4**. The oil is directed past the **Scrub Brush Valve L4** and through the two **Scrub Brush Motors**, causing them to rotate The oil travels from the **Scrub Brush Motors** through the **Oil Cooler** and **Filter**, then to the **Charge Circuit** for the **Main Piston (propulsion) Pump**.

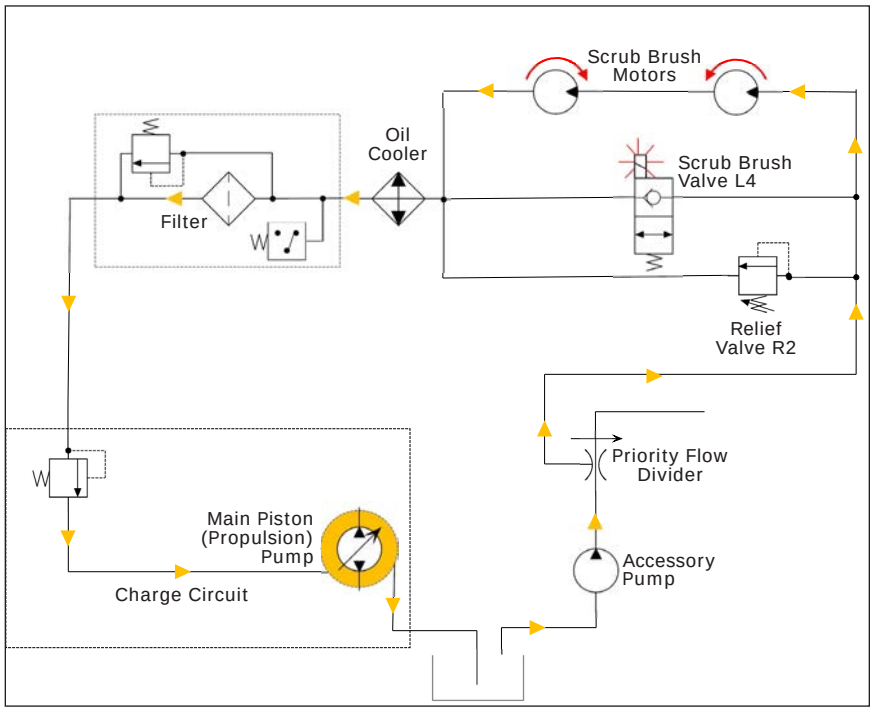

### *Scrub Lift Cylinder with Engine Shut Off*

When the engine is shut off, the de-energized **Scrub Cylinder Lock L6** valve holds the oil pressure from the bottom port on the **Scrub Lift Cylinder** to support the **Weight of The Scrub Deck** and prevent it from "floating down".

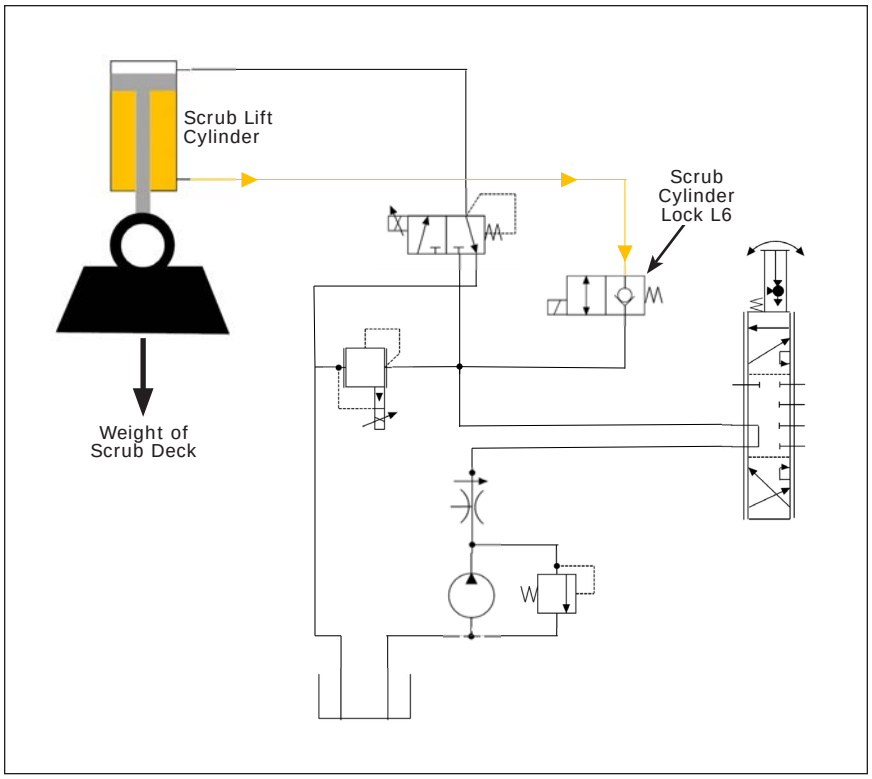


### *Scrub Lift Cylinder Off with Engine Running*

When the engine is running but the scrub system is off, the **Accessory Pump** pumps the oil through the **Steering Unit** and to the **Scrub Brush Proportional Up L7** valve, the **Scrub Brush Proportional Down L5** valve and the **Scrub Cylinder Lock L6** valve.

- The **Brush Proportional Up L7** valve provides adequate oil pressure to the bottom port on the **Scrub Lift Cylinder**, through the **Scrub Cylinder Lock L6** valve, to raise the scrub deck.
- The de-energized **Scrub Brush Proportional Down L5** valve closes off the oil flow to the top port on the **Scrub Lift Cylinder.** Any oil from the top port on the **Scrub Lift Cylinder** is directed to the **Reservoir**.

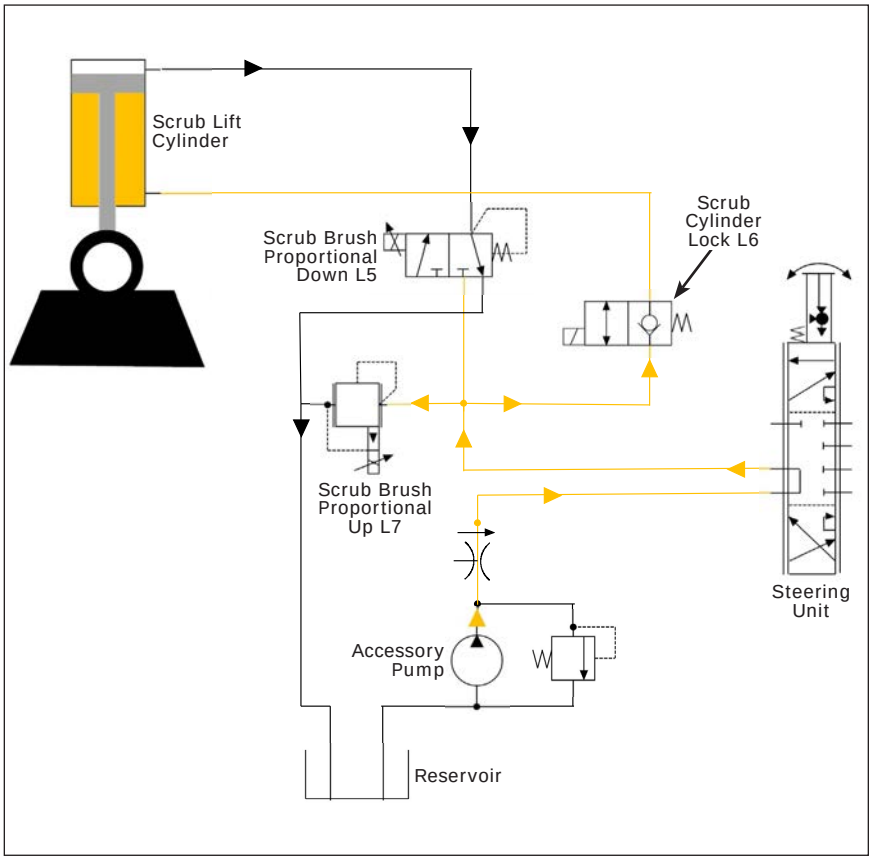


- The de-energized **Scrub Cylinder Lock L6** valve holds the oil pressure from the bottom port on the **Scrub Lift Cylinder** to keep the scrub deck in its raised position.

### *Scrub Lift Cylinder On with Engine Running*

When the engine is running and the scrub system is switched on, the **Accessory Pump** pumps the oil through the **Steering Unit** and to the **Scrub Brush Proportional Up L7** valve, the **Scrub Brush Proportional Down L5** valve and the **Scrub Cylinder Lock L6** valve.

- The energized **Scrub Brush Proportional Up L7** valve provides oil pressure ranging from approximately 750 to 779 psi (depending on the scrub pressure selected) to the bottom port on the **Scrub Lift Cylinder**.
- The energized **Scrub Brush Proportional Down L5** valve provides oil pressure ranging from approximately 333 to 499 psi (depending on the scrub pressure selected) to the top port on the **Scrub Lift Cylinder**.
- The energized **Scrub Cylinder Lock L6** valve opens to allow bidirectional oil flow through the valve.

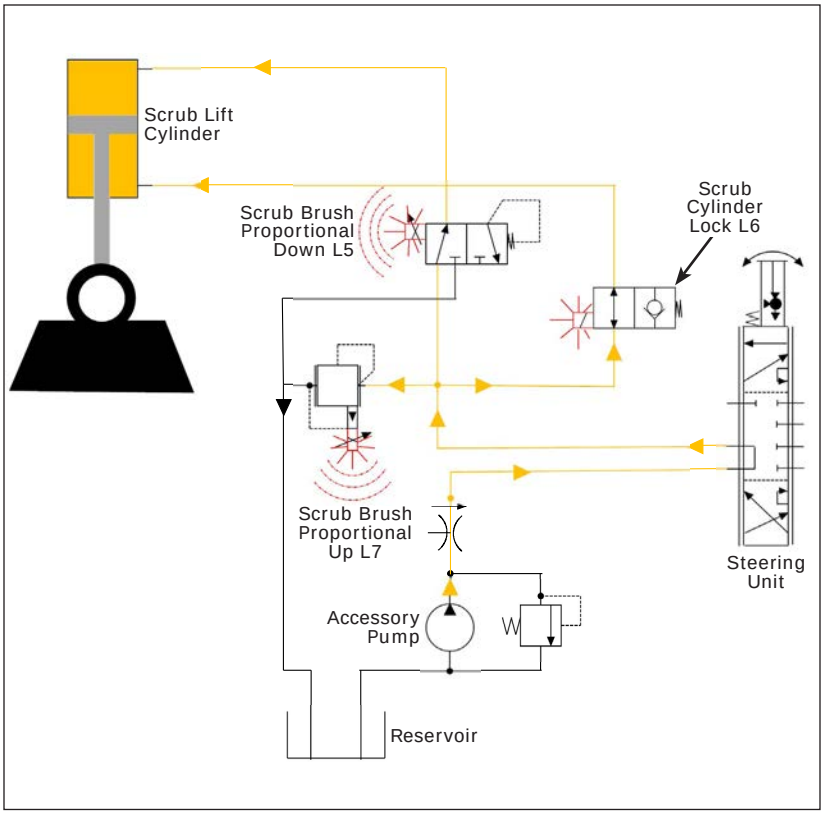


***Note:*** *The pressure differential between what the **Scrub Brush Proportional Up L7** valve and the **Scrub Brush Proportional Down L5** valve send to the **Scrub Lift Cylinder**, and the weight of the scrub deck all work in conjunction to produce the three scrub pressures.*

## *Component Locations*

The **Brush Housing Weldment** houses the scrub brushes, **Drive Motor Assemblies** and the brush drive components.

The **Scrub Lift Cylinder Assembly** raises and lowers the scrub deck.

The **Left** and **Right Skirt Assemblies** are mounted on the outside of the **Brush Housing Weldment**.

The removable **Hopper** collects any dirt or debris picked up by the scrub brushes.

The **Screen Weldment** sits in the **Hopper**, and is connected to a vacuum hose that removes any accumulated water from the **Hopper**. The **Screen Weldment** can be removed from the **Hopper** for cleaning.

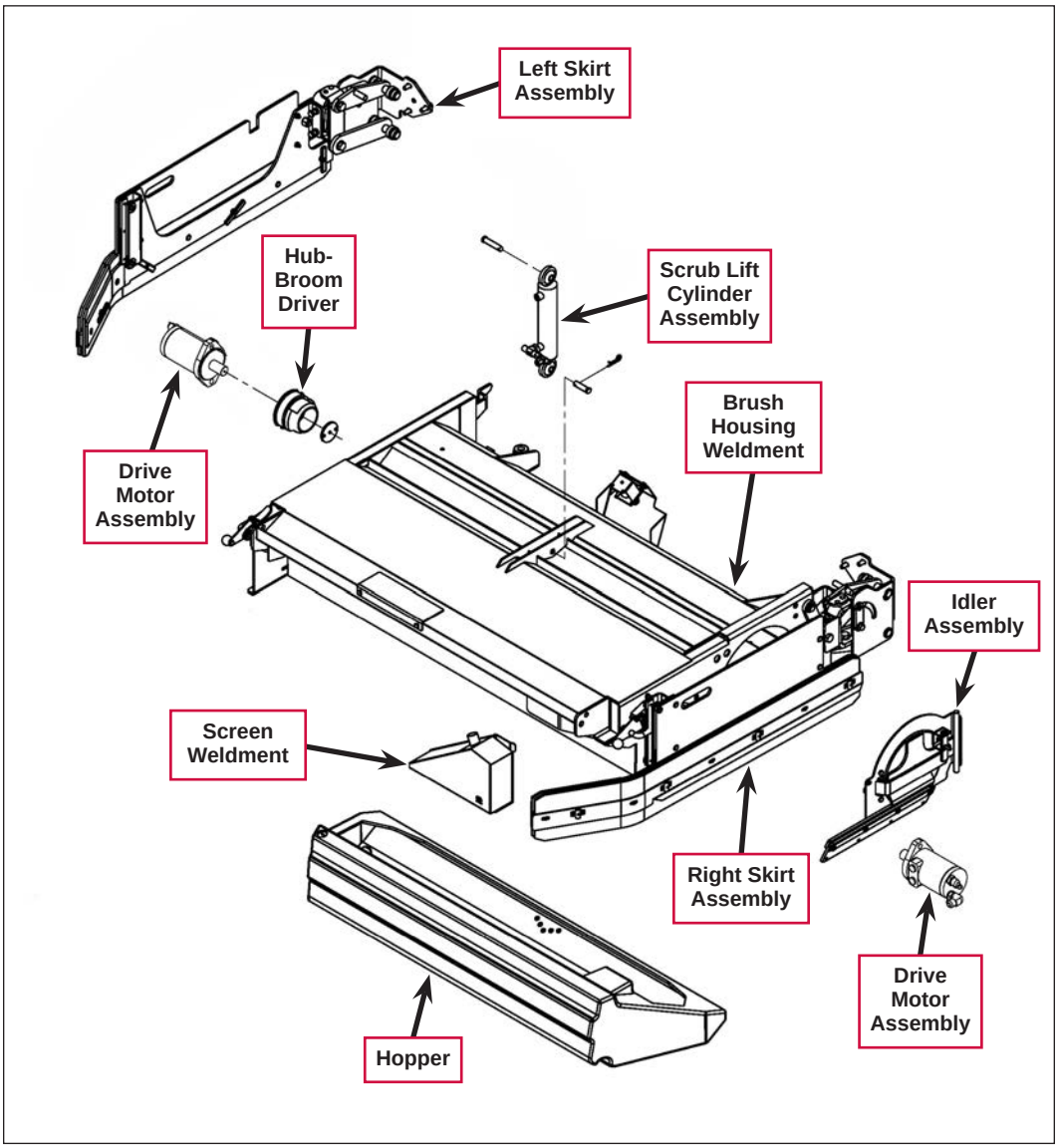

# Troubleshooting

## General Troubleshooting

| Problem | Cause | Correction |
|---|---|---|
| The scrub deck will not extend downward, the scrub brush motors will not operate and there is no solution flow.<br><br>*Note that a fault code 01, 13 or 15 will disable the scrub system.* | Scrub brush pressure valve solenoids over current (fault code 01 displayed) | • Check L5 down and L7 up pressure valve solenoid coils (on same fault line) for wiring problems, L5 wire colors (+ ORN and - WHT/VIO) and L7 ( + ORN and ORN/RED).<br>• Check coil resistance. If less than 1.8 ohms, replace. Also see main scrub on and right scrub brushes deck pressure electrical ladder detail and further specs. |
| | Scrub brush motor solenoid over current (fault code 13 displayed) | • Check L4 solenoid coil wiring for problems (+ ORN and - ORN/BLU).<br>• Check coil resistance. If less than 6 ohms, replace. Also see main scrub on and side sweep/right scrub electrical ladder detail. |
| | Scrub cylinder lock solenoid over current (fault code 15 displayed) | • Check L6 solenoid coil wiring for problems (+ ORN and - YEL/BLU).<br>• Check coil resistance. If less than 6 ohms, replace. Also see main scrub on and right scrub brushes deck pressure electrical ladder detail. |

| Problem | Cause | Correction |
|---|---|---|
| Scrub deck pressures will not change; inoperative in its three settings | The scrub deck pressures are set incorrectly in the User Options Menu. | Reprogram the scrub deck pressures as required. (Refer to the ***Control System/Control Board (Driver Box) Programming Options/User Options Menu*** subsection.) |
| | Problem in the electrical control circuit | • Check the coil resistance on both L5 and L7 solenoids (spec. 2.2 ohms).<br>• Check solenoid wiring continuity from Driver Box for both L5 and L7.<br>• Check the current draw on both solenoids using an amp clamp (spec. 2.1 amps).<br>• Substitute a new Driver Box if the solenoid coils and wiring check out OK, but no current is found when activating scrub deck pressure circuit function.<br>• If the electrical control circuits test OK, check for possible Hydraulic load circuit problems. |
| | Problem in the hydraulic load circuit | • Inspect for binding and any possible mechanical damage to the deck lift cylinder and deck lift linkage.<br>• Remove the S5 and S7 scrub lift cylinder valve cartridges from the manifold. Inspect, clean and operate the cartridges outside of the manifold. If the cartridges function OK, reinstall. If not, replace as necessary.<br>• Connect a hydraulic pressure gauge at the test ports TP4 and TP5 and check the system operating pressures (See the table below for specifications.)<br>• If the deck pressures still do not function correctly after replacing the valve cartridge(s), replace the scrub lift cylinder. |

| | Test Port | Pressure Type | Controlled by | Pressure Setting | PSI |
|---|---|---|---|---|---|
| Scrub lift cylinder 1.50 x 5.00, engine at 2200 RPM | TP4 | Lift Pressure | Proportioning Valve S7 | 1 | 750 - 774 |
| | | | | 2 | 750 - 767 |
| | | | | 3 | 745 - 779 |
| | TP5 | Down Pressure | Proportioning Relief Valve S5 | 1 | 333 - 346 |
| | | | | 2 | 393 - 412 |
| | | | | 3 | 458 - 499 |

| | Pressure Setting 1 | Pressure Setting 2 | Pressure Setting 3 |
|---|---|---|---|
| Average Lift Pressure Differential (Lift Pressure minus Down Pressure) | 423 psi | 353 psi | 283 psi |

***Note:*** *The actual scrub pressure is determined by the differential lift pressure lifting the scrub deck upward against the downward force of the scrub deck weight. The lower the differential lift pressure, the higher the scrub pressure.*

## *Main Scrub Deck and Right Side Scrub Down*

The following conditions must be met for the Main Scrub Deck to move to the scrub (down) position:

- The **Key Switch** must be on.
- The engine must be running.
- The scrub on mode must be selected on the **Dashboard Panel**.

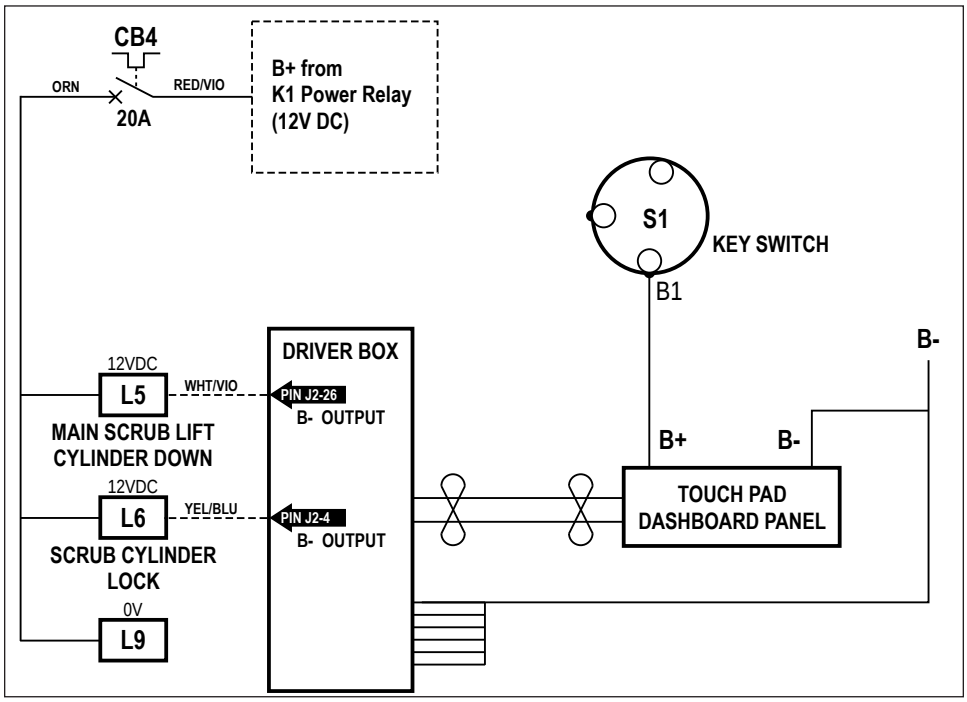


| Component | Current - Amps | Coil Resistance - Ohms |
|---|---|---|
| L5 | 2.1 Amps | 2.2 ohms |
| L6 | 1.5 Amps | 8 ohms |
| L9 | 1.5 Amps | 8 ohms |

## *Main Scrub Deck and Right Side Scrub Pressure*

The following conditions must be met for the Main Scrub Deck to apply the selected downward scrub pressure:

- The **Key Switch** must be on.
- The engine must be running.
- The scrub on mode must be selected on the **Dashboard Panel**.
- The drive pedal must be activated (moved from the neutral position).

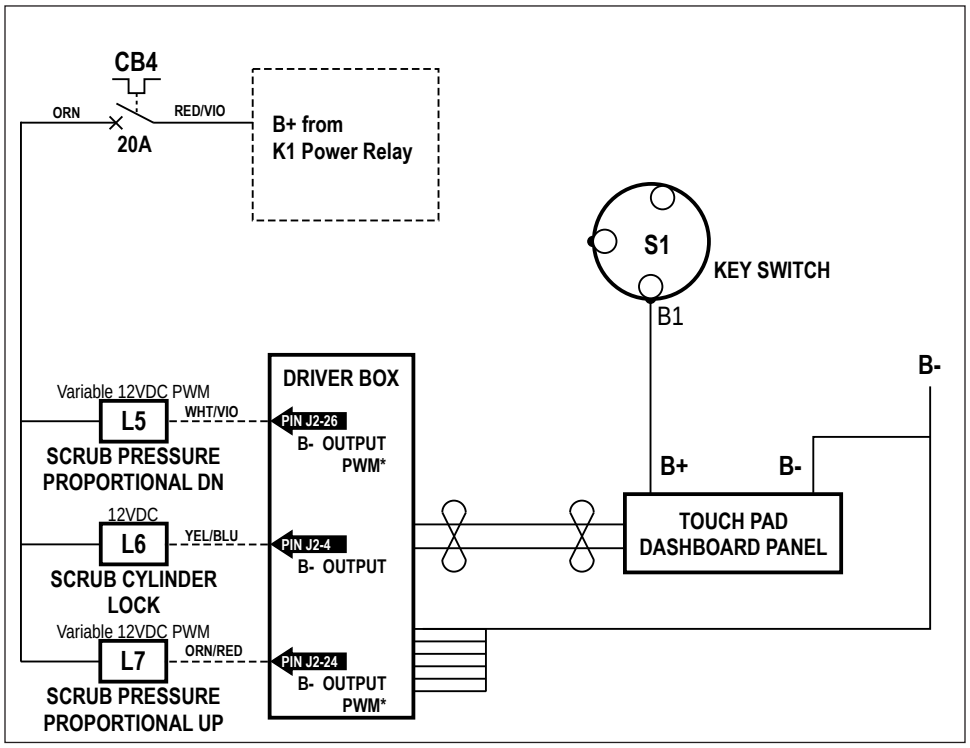


*** PWM = Pulse Width Modulated**

| Component | Current - Amps | Coil Resistance - Ohms |
|---|---|---|
| L5 | 2.1 Amps | 2.2 ohms |
| L6 | 1.5 Amps | 8 ohms |
| L7 | 2.1 Amps | 2.2 ohms |

| Pressure Setting | L5 Coil Amp draw readings (± 10%) |
|---|---|
| 1 | 1.38 - 1.75 amps<br>(varies with scrub setting selected) |
| 2 | |
| 3 | |

| Pressure Setting | L7 Coil Amp draw readings (± 10%) |
|---|---|
| 1 | 1.45 to 1.75 amps<br>(all three scrub pressure settings) |
| 2 | |
| 3 | |

## *Main Scrub and Side Sweep/Scrub On*

The following conditions must be met for the Main Scrub Deck motors to run:

- The **Key Switch** must be on.
- The engine must be running.
- The scrub on mode must be selected on the **Dashboard Panel**.
- The drive pedal must be activated (moved from the neutral position).

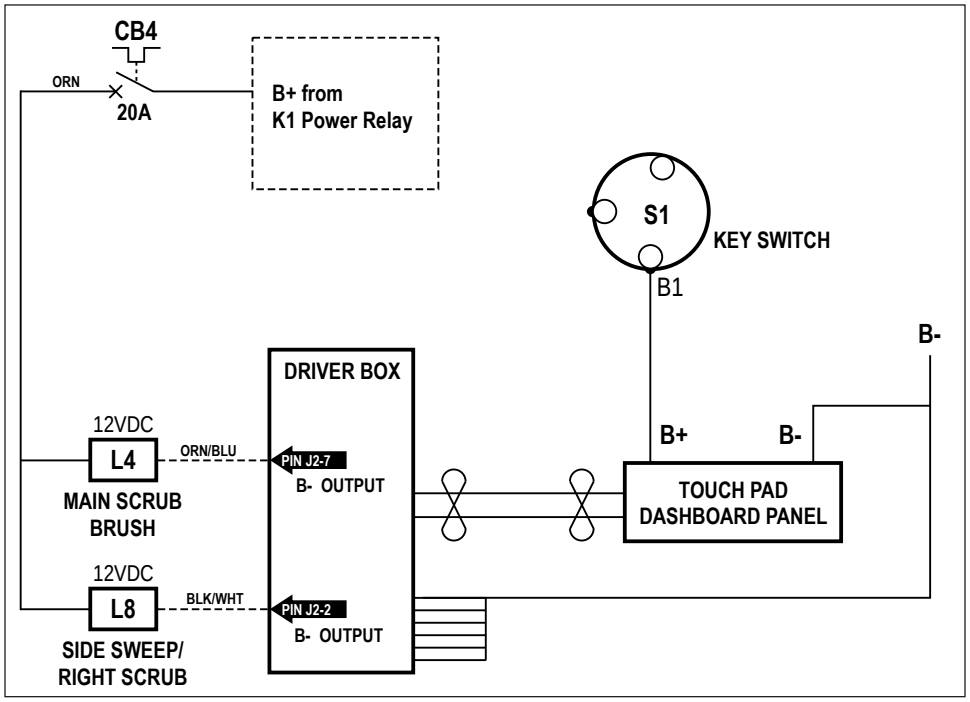


| Component | Current - Amps | Coil Resistance - Ohms |
|---|---|---|
| L4 | 1.5 Amps | 8 ohms |
| L8 | 1.5 Amps | 8 ohms |

# Specifications

## General Specifications

| Component | Specifications |
|---|---|
| Scrub Brush Solenoid Valve L4 | Current – 1.5 amps |
| | Nominal Coil Resistance – 8 ohms |
| Scrub Pressure Proportional Down Solenoid Valve L5 | Current – 2.1 amps |
| | Nominal Coil Resistance – 2.2 ohms |
| | Voltage Range (PWM) – 0-12 V |
| Scrub Cylinder Lock Solenoid Valve L6 | Current – 1.5 amps |
| | Nominal Coil Resistance – 8 ohms |
| Scrub Pressure Proportional Up Solenoid Valve L7 | Current – 2.1 amps |
| | Nominal Coil Resistance – 2.2 ohms |
| | Voltage Range (PWM) – 0-12 V |
| Main Broom Motors | Displacement – 4.5 CIR |

## Hydraulic Valve Pressure and Solenoid Coil Current Draw at the Three Scrub Pressures

| Proportioning Valve | Pressure Type | Scrub Pressure Setting | Hydraulic Pressure at Test Port TP4 | Valve Solenoid Coil Current Draw |
|---|---|---|---|---|
| S7 | Scrub Pressure Up | 1 | 750 to 774 psi | 1.45 to 1.75 amps (all three scrub pressure settings) |
| | | 2 | 750 to 767 psi | |
| | | 3 | 745 to 779 psi | |

| Proportioning Valve | Pressure Type | Scrub Pressure Setting | Hydraulic Pressure at Test Port TP5 | Valve Solenoid Coil Current Draw |
|---|---|---|---|---|
| S5 | Scrub Pressure Down | 1 | 333 to 346 psi | 1.38 - 1.75 amps (varies with scrub setting selected) |
| | | 2 | 393 to 412 psi | |
| | | 3 | 458 to 499 psi | |

## *Special Tools*

| | |
|---|---|
| Hydraulic test gauge w/connector, 3000 psi range, p/n 56504516 |  |

# Scrub System, Right Side

## Functional Description

### Overview

The right side scrub system (optional on some models) includes the right brush assembly, right brush hydraulic motor, the hydraulic scrub cylinder that lowers and raises the right scrub assembly, and the associated hydraulic solenoid valves.

The right scrub lift cylinder is powered by the same hydraulic lines that actuate the main scrub lift cylinder, and is controlled by a separate side scrub lift solenoid valve S9.

The right brush hydraulic motor is powered by the hydraulic discharge line from the two main scrub brush motors and is controlled by a separate side/sweep scrub solenoid valve S8.

### Right Side Scrub System Wiring Diagram

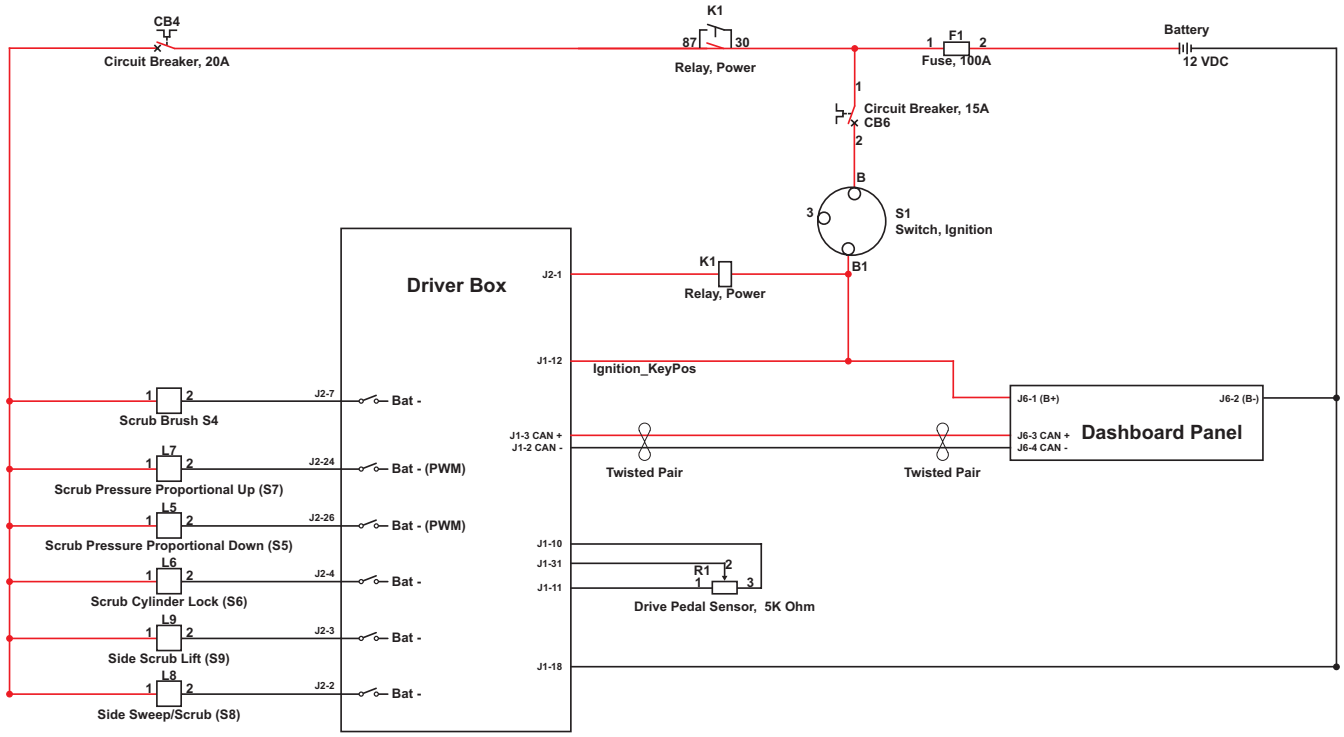


## Circuit Description

For the right side scrub system to work, the key switch must be on, the engine must be running and the **Driver Box** must receive a signal from the **Dashboard Panel** via the CAN Bus that the Operator has actuated the main and right side scrub systems.

### *Right Side Scrub Brush Motor*

For the right side scrub brush motor to run:

- The **Driver Box** must receive a signal from the **Drive Pedal Sensor R1** that the drive pedal has been moved from the neutral position.
- The main scrub brush motors must be running to supply oil to right side scrub motor.
- The **Driver Box** must provide a ground from pin **J2-2** to the **Side Sweep/Scrub** solenoid valve **S8** to open the valve and allow oil to flow to the right side scrub motor.

### *Right Side Scrub Lift Cylinder*

For the right side scrub lift cylinder to actuate the scrub brush:

- The **Scrub Cylinder Lock** solenoid valve **S6** must be open to allow oil to flow to and from the scrub lift cylinder.
- The **Driver Box** must provide the appropriate ground signal from pin **J2-26** to the **Scrub Pressure Proportional Down** valve **S5**, and the appropriate ground signal from pin **J2-24** to the **Scrub Pressure Proportional Up** valve **S7** to extend the right side scrub lift cylinder and lower the right side scrub brush.
- Once the right side scrub brush is retracted upward after scrubbing, the **Side Scrub Lift** solenoid valve **S9** closes to shut off the oil flow to the right side scrub lift cylinder to ensure that the brush remains retracted.

## *Right Side Scrub System Hydraulic Diagrams*

### *Side Scrub Motor Off*

When the **Right Side Scrub Motor** is off, the **Side Sweep/Scrub Valve L8** is de-energized. The **Side Sweep/Scrub Valve L8** directs the oil to the oil cooler and filter, bypassing the **Right Side Scrub Motor**.

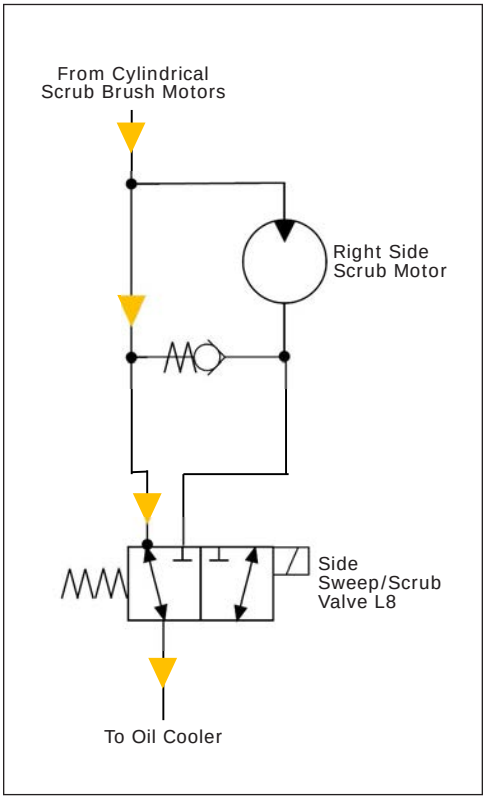

### *Side Scrub Motor On*

When the **Right Side Scrub Motor** is on, the **Side Sweep/Scrub Valve L8** is energized to direct the oil from the **Cylindrical Scrub Brush Motors** through the **Right Side Scrub Motor**. The oil then travels from the discharge side of the **Right Side Scrub Motor** to the oil cooler and filter.

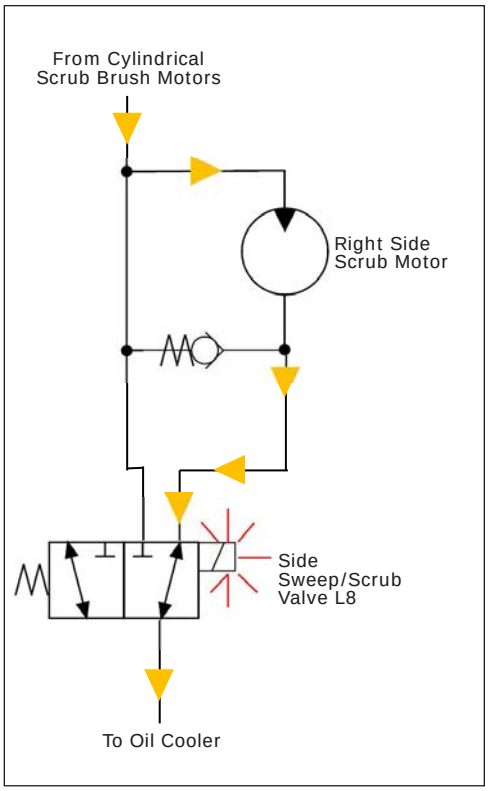


### *Side Scrub Lift Cylinder Off (Retracted)*

When the engine is running and the main scrub system or right side scrub brush is switched off, the **Side Scrub Lift Valve L9** is energized to direct the oil from the **Lower Chamber on the Scrub Deck Lift Cylinder** (**D**) to the lower chamber on the **Side Scrub Lift Cylinder** to raise the right side scrub brush. The **Side Scrub Lift Valve L9** directs the oil from the upper chamber on the **Side Scrub Lift Cylinder** (**E**) to the oil reservoir.

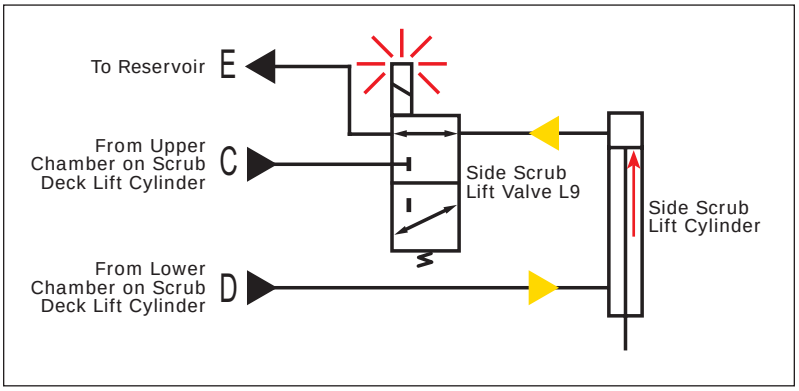


When the engine is switched off, the de-energized Scrub Cylinder Lock L6 Valve holds the oil pressure from the bottom chambers on both the **Side Scrub Lift Cylinder** and Scrub Lift Cylinder to keep the right side scrub brush and cylindrical scrub deck in the raised position.

### *Side Scrub Lift Cylinder On*

When the engine is running and the main scrub system and right side scrub brush are switched on, the **Side Scrub Lift Valve L9** is de-energized to direct the oil from the **Upper Chamber on the Scrub Deck Lift Cylinder** (**C**) to extend the **Side Scrub Lift Cylinder** and lower the right side scrub brush.

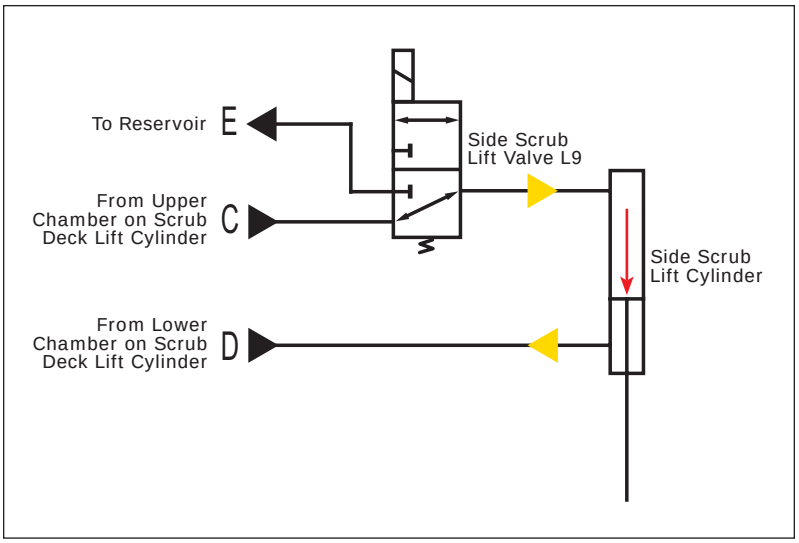


## *Component Locations*

The **Right Scrub Assembly** is mounted to the **Bumper Weldment** via a linkage assembly.

The **Right Side Scrub Lift Cylinder** extends and retracts the **Right Scrub Assembly** in conjunction with the cylindrical scrub deck.

The **Right Side Scrub Motor** is plumbed into the hydraulic lines for the cylindrical deck brush motors and switches on and off with the cylindrical deck motors.

The **Right Solution Solenoid Valve** (L11) controls the solution flow to the **Right Scrub Assembly**.

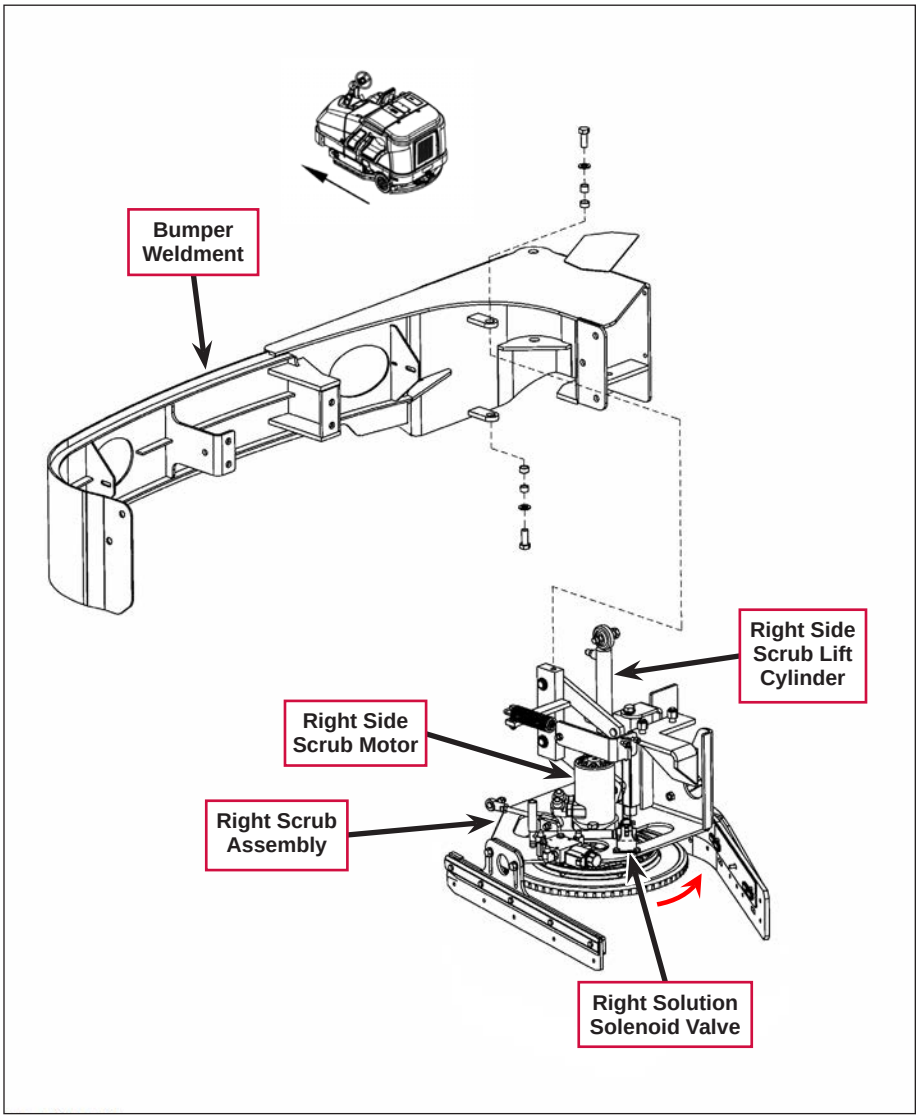

The **Right Side Scrub/Sweep Solenoid Valve S8/L8** controls the right side scrub motor. **S8/L8** is located above the front end of the **Scrub Deck**.

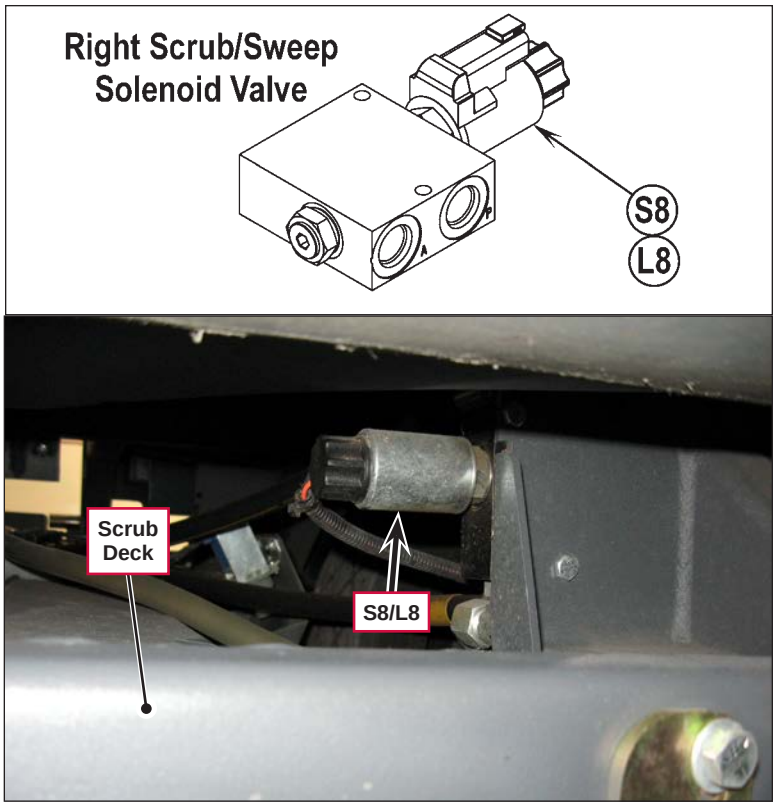


The **Right Side Scrub Lift Cylinder Solenoid Valve S9/L9** controls the side scrub lift cylinder. **S9/L9** is located inboard of the **Right Scrub Assembly**.

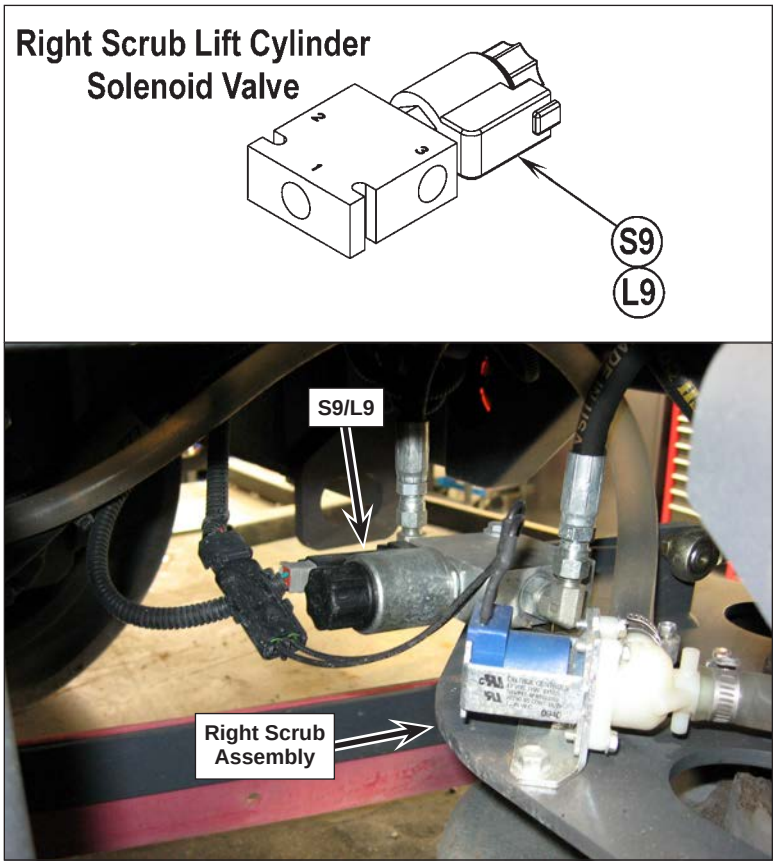

# Maintenance and Adjustments

***Warning!*** ***Before performing any machine maintenance or adjustments, make sure the key switch is off, the key is removed from the machine and the parking brake is engaged.***

## Side Brush Tilt Adjustment

1. Disconnect one of the two **Rod Ends** from its **Mounting Tab**.
2. Loosen the **Jam Nut**.
3. Rotate either **Rod End** to lengthen or shorten the **Rod End Assembly** as necessary to get the correct brush angle to the floor.

***Note:*** *The nominal factory dimension between the Rod End stud centers is 7.5”±.06” [190.5 mm ±1.5 mm].*

4. Make sure the threaded stud on the **Rod End** will align with the matching hole in the **Mounting Tab**, then tighten the **Jam Nut**.
5. Reinstall the **Rod End** into the **Mounting Tab**.
6. Run the brush up and down to check for correct brush angle with the floor.
7. Repeat steps 1 through 5 above as necessary.

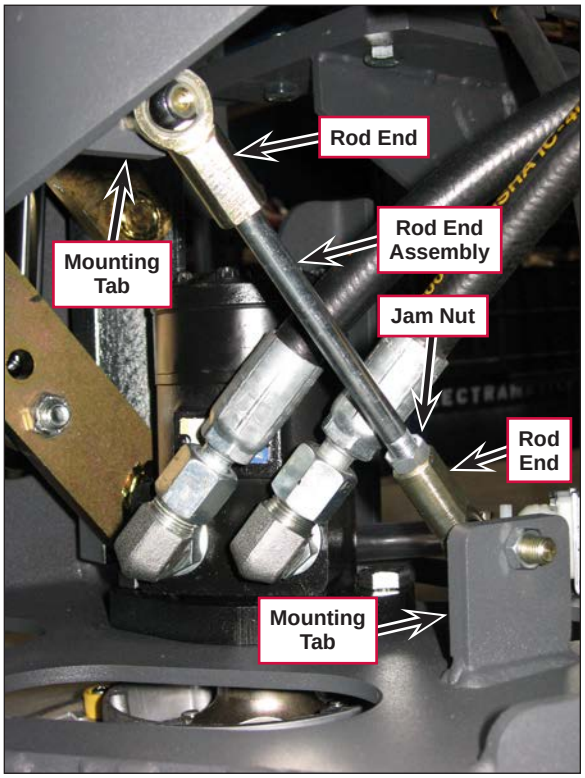

# Troubleshooting

## General Troubleshooting

| Problem | Cause | Correction |
|---|---|---|
| The side scrub brush will not extend downward, the side scrub brush motor will not operate and there is no solution flow.<br><br>*Note that a fault code 08, 16 or 18 will disable the side scrub system.* | Right Scrub System not installed | Make sure the side scrub system is installed in the Configuration Menu. (Refer to the ***Control System/ Control Board (Driver Box) Programming Options/Configuration Menu*** subsection.) |
| | Right side scrub solution solenoid valve over current (fault code 08 displayed) | • Check L11 solenoid coil wiring for problems (+ ORN and - BLU/YEL).<br>• Check coil resistance. If less than 10 ohms, replace. Also see main scrub and right side scrub solution valves and pump electrical ladder detail. |
| | Right side scrub/sweep motor solenoid valve over current (fault code 16 displayed) | • Check L8 solenoid coil wiring for problems (+ ORN and - BLK/WHT).<br>• Check coil resistance. If less than 6 ohms, replace. Also see main scrub on and side sweep/right scrub electrical ladder detail. |
| | Right Side scrub lift solenoid over current (fault code 18 displayed) | • Check L9 solenoid coil wiring for problems (+ ORN and - GRN/VIO).<br>• Check coil resistance. If less than 6 ohms, replace. Also see main scrub and right side scrub lift electrical ladder detail. |

## *Main Scrub Deck and Right Side Scrub Down*

The following conditions must be met for the Right Side Scrub Brush to move to the scrub (down) position:

- The **Key Switch** must be on.
- The engine must be running.
- The scrub on mode and side broom/scrub must be selected on the **Dashboard Panel**.

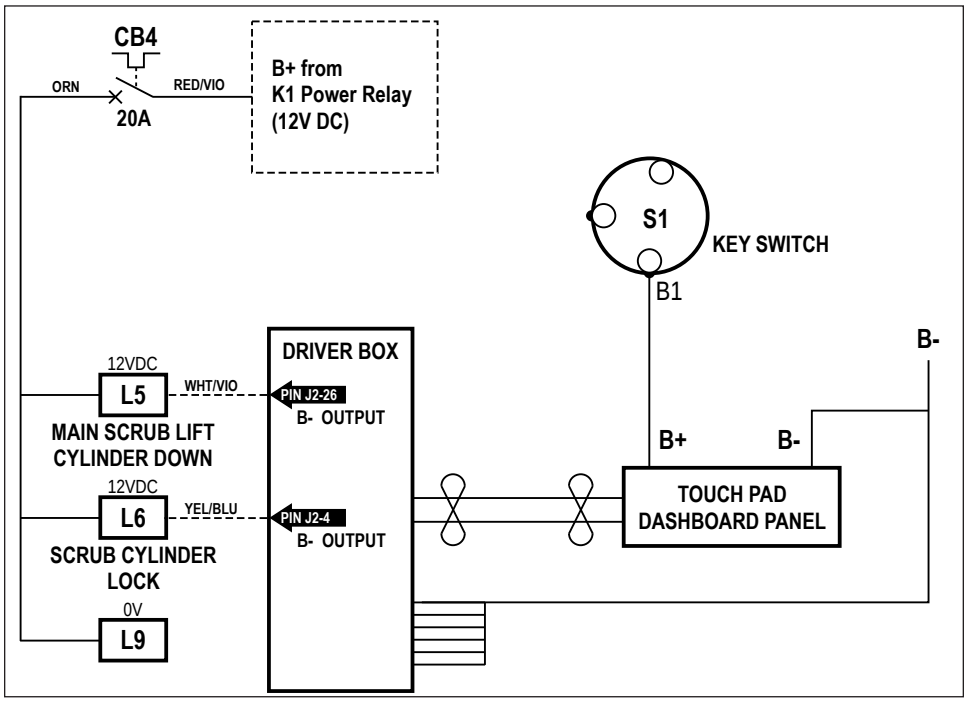


| Component | Current - Amps | Coil Resistance - Ohms |
|---|---|---|
| L5 | 2.1 Amps | 2.2 ohms |
| L6 | 1.5 Amps | 8 ohms |
| L9 | 1.5 Amps | 8 ohms |

## *Main Scrub and Side Sweep/Scrub On*

The following conditions must be met for the Right Side Scrub Brush motor to run:

- The **Key Switch** must be on.
- The engine must be running.
- The scrub on mode and side broom/scrub must be selected on the **Dashboard Panel**.
- The drive pedal must be activated (moved from the neutral position).

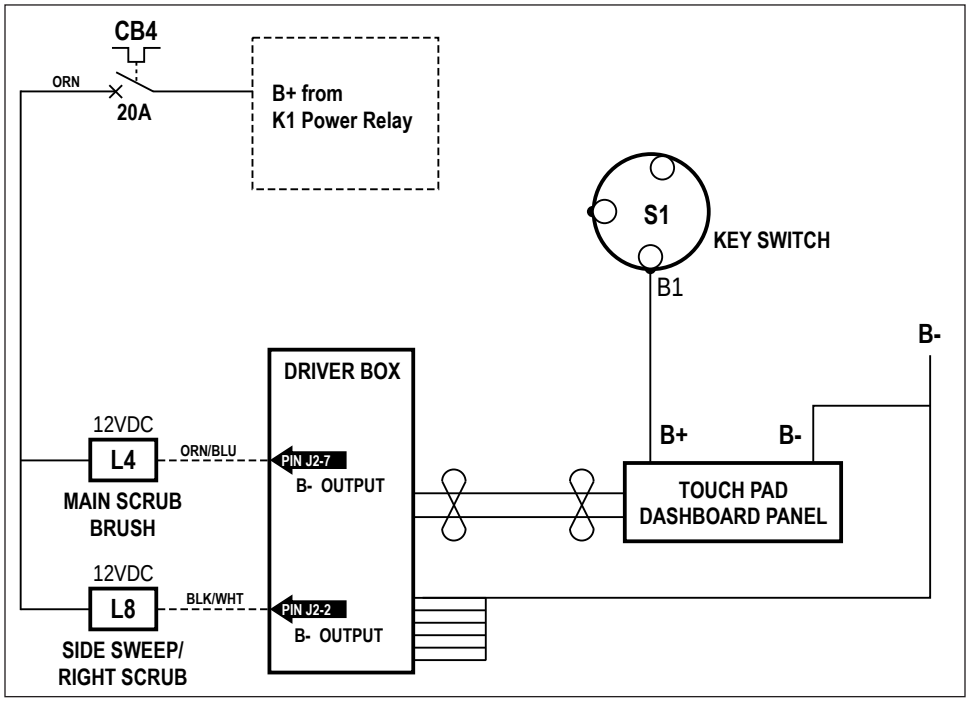


| Component | Current - Amps | Coil Resistance - Ohms |
|---|---|---|
| L4 | 1.5 Amps | 8 ohms |
| L8 | 1.5 Amps | 8 ohms |

## Specifications

| Component | Specifications |
|---|---|
| Scrub Brush Solenoid Valve L4 | Current – 1.5 amps |
| | Nominal Coil Resistance – 8 ohms |
| Side Sweep/Scrub Solenoid Valve L8 | Current – 1.5 amps |
| | Nominal Coil Resistance – 8 ohms |
| Side Scrub Lift Solenoid Valve L9 | Current – 1.5 amps |
| | Nominal Coil Resistance – 8 ohms |
| Right Side Scrub Motor | Displacement – 11.3 CIR |
| | Rotation - Clockwise (as viewed from shaft end) |
| | Pressure Port - A |

## Special Tools

| | |
|---|---|
| Hydraulic test gauge w/connector, 3000 psi range, p/n 56504516 |  |

# Solution System

## Functional Description

### Overview

The solution system delivers water, or detergent and water, to the floor for the scrub system. The standard solution system includes the **Solution Tank**, solution-empty switch, **Solution Shutoff Valve**, **Solution Filter**, **Solution Pump** (M4), **Main Solution Solenoid Valve** (L10), and the associated plumbing to distribute solution to the **Scrub Brushes**. A capped **Solution Drain Hose** allows you to drain the solution tank.

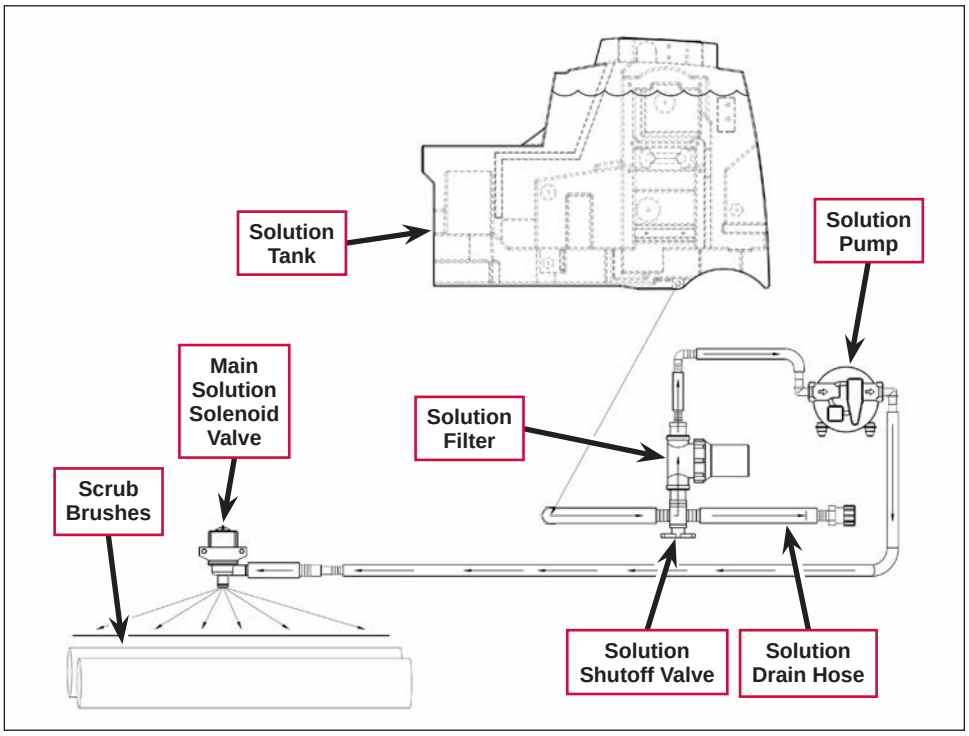


The solution flows to the **Scrub Brushes** any time the scrub system is enabled, the scrub deck is lowered and the drive pedal is not in the neutral position. Programming options allow you to enable or disable solution flow when the machine moves in reverse.

When the scrub system is disabled, no solution will flow to the **Scrub Brushes** regardless of drive pedal or scrub deck position. The operator can enable the solution system independent of the scrub system to pre-wet the floor before enabling the scrub and/or recovery systems.

The solution system also provides solution to the following optional equipment if the machine is so equipped:

- Right side scrub brush,
- DustGuard™ system spray nozzles,
- Wash hose.

### Solution Flow Control

The electric solution pump and main solution solenoid valve control the solution flow to the main scrub brushes. The main solution solenoid valve opens when the solution system switches on. A Pulsed Width Modulated (PWM) output from **J3-2** on the Drive Box controls the speed of the solution pump to regulate solution flow to the brushes.

## *Detergent System*

The AXP™/EDS and EcoFlex™ detergent systems use dual diaphragm **Detergent Pumps** (M10 and M11) to pump detergent into the solution flow upstream of the **Main Solution Solenoid Valve** (L10). Two **Detergent Pumps** are used to ensure adequate detergent supply at the higher detergent and solution flow rates. The Driver Box sends voltage to the **Detergent Pumps** that changes polarity and dwell time to regulate the detergent dispense rate according to the solution flow rate.

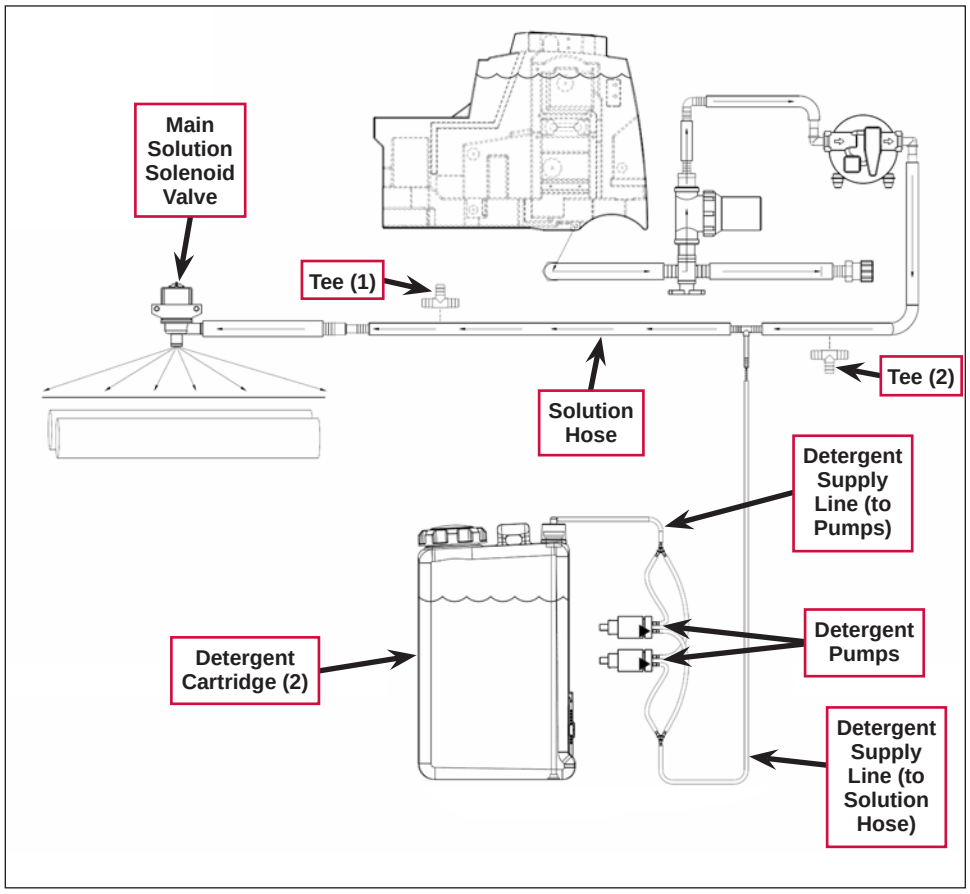


The **Detergent Supply Line** from the **Detergent Cartridge** is split into two lines, one feeding each **Detergent Pump**. The two lines from the **Detergent Pumps** merge into one **Detergent Supply Line**, which is then connected to the **Solution Hose** upstream of the **Main Solution Solenoid Valve**.

The **Tee (1)** by the **Main Solution Solenoid Valve** provides solution to the right front scrub brush (if the machine is so equipped).

The **Tee (2)** upstream of the **Detergent Supply Line** provides solution from the recovery tank for the extended scrub system (if the machine is so equipped).

## *Extended Scrub System*

Machines equipped with the optional extended scrub system will pump the recovered water from the **Recovery Tank** to the scrub brushes. The extended scrub system uses an additional **Extended Scrub Pump** (M6) to pump the recovered water to the scrub brushes.

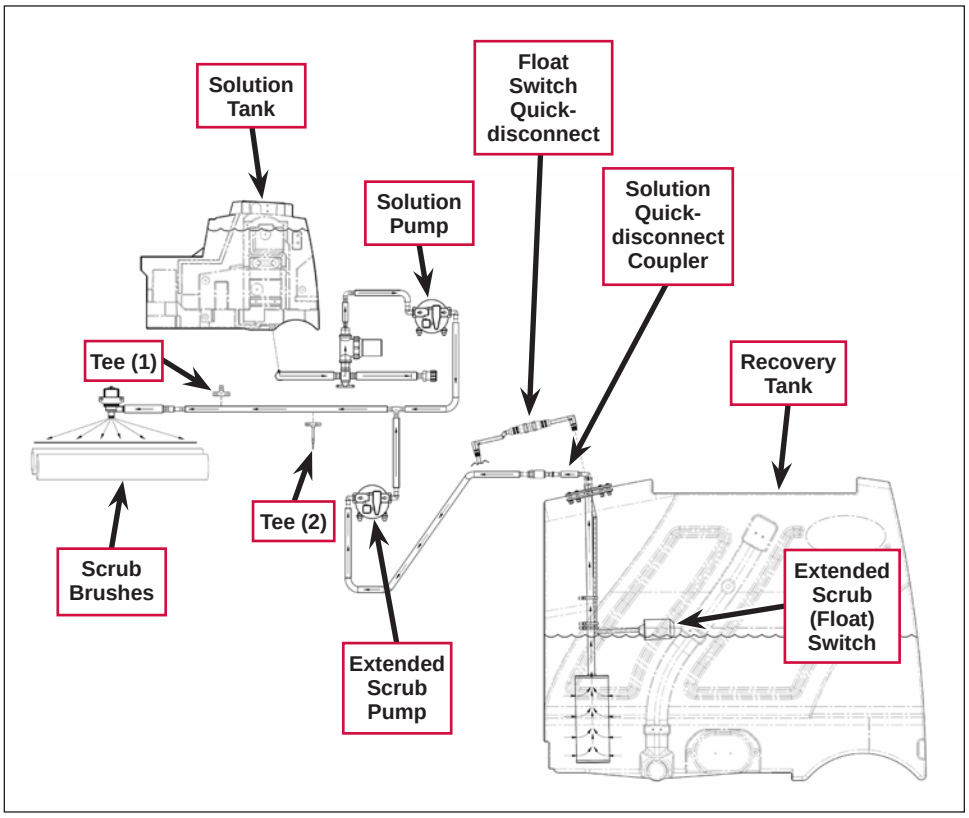


Note that the extended scrub system can be configured to operate only when the solution tank is empty (**USE CLEAN FIRST** mode), or whenever the system is enabled, there is enough recovered water available in the recovery tank and the **Extended Scrub (Float) Switch** (S7) is open (**USE ANYTIME** mode).

In order for the extended scrub system to work:

- The extended scrub system must be installed and enabled, and,
- The **Extended Scrub (Float) Switch** (S7) must not be actuated (open), indicating adequate water level in the recovery tank.
- If the extended scrub system is configured to the **USE CLEAN FIRST** mode, the solution tank empty switch (S3) must be actuated (closed), indicating that the solution tank is empty.

  If the extended scrub system is configured to the **USE ANYTIME** mode, the solution tank empty switch (S3) will have no effect.

Note that when the machine is in the extended scrub mode, the **Solution Pump** will switch off, the **Extended Scrub Pump** will switch on and the detergent pumps will continue to add detergent to the recovered water.

The **Float Switch Quick-disconnect** and **Solution Quick-disconnect Coupler** allow you to disconnect the water line and **Extended Scrub (Float) Switch** electrical connector when removing the **Recovery Tank**.

The **Tee (1)** closer to the **Scrub Brushes** provides solution to the right front scrub brush (if the machine is so equipped).

The **Tee (2)** farther from the **Scrub Brushes** delivers detergent to the solution (if the machine is equipped with a detergent system).

Note that on machines not equipped with AXP™/EDS or EcoFlex™, the operator must manually mix the detergent with the water in the solution tank if detergent is desired in the solution.

## *Right Side Scrub Brush*

On machines equipped with the optional **Right Side Scrub Brush**, the solution is plumbed from the solution system to the **Right Solution Solenoid Valve** (L11). The **Right Solution Solenoid Valve** opens along with the **Main Solution Solenoid Valve** (L10) to allow solution flow to the nozzle at the **Right Side Scrub Brush**.

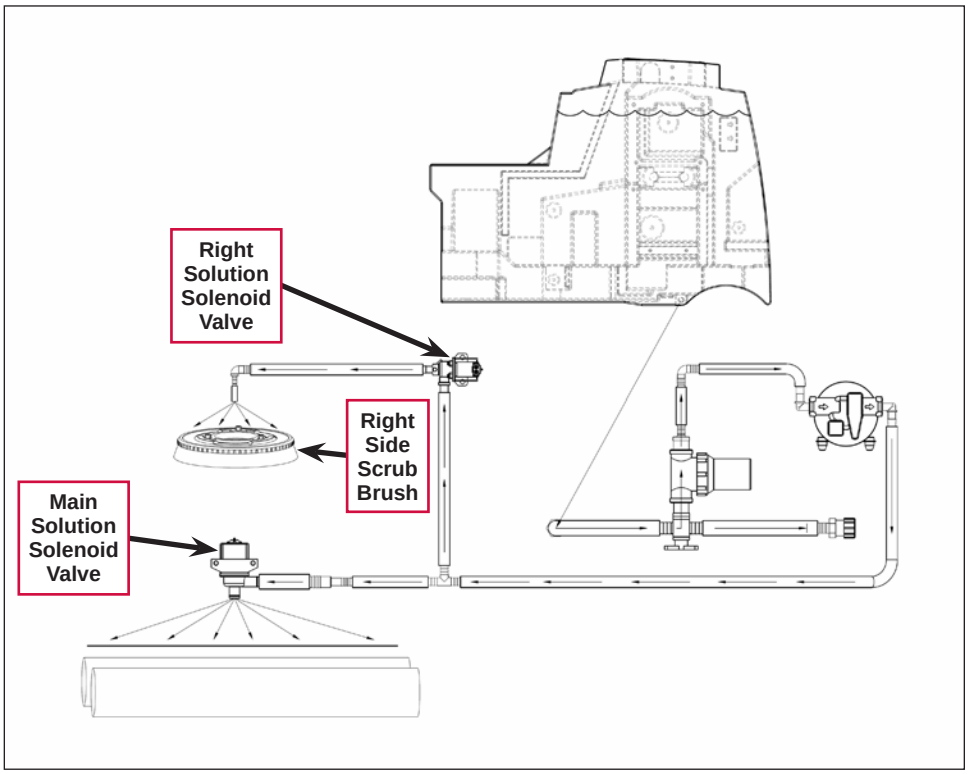


## *Wash Hose*

The optional wash hose kit uses a separate **Wand Pump** (M8) to pump solution from the solution tank to the hose and **Wash Hose Nozzle** located behind the Operator seat. The wash hose kit operates independently and does not require the Operator to actuate the seat switch.

A pressure switch on the **Wand Pump** will switch on the **Wand Pump** when the **Wash Hose Nozzle** is opened and the solution pressure in the hose drops below 40 psi. When the **Wash Hose Nozzle** is closed and the solution pressure in the hose reaches 60 psi, the pressure switch will switch the **Wand Pump** off.

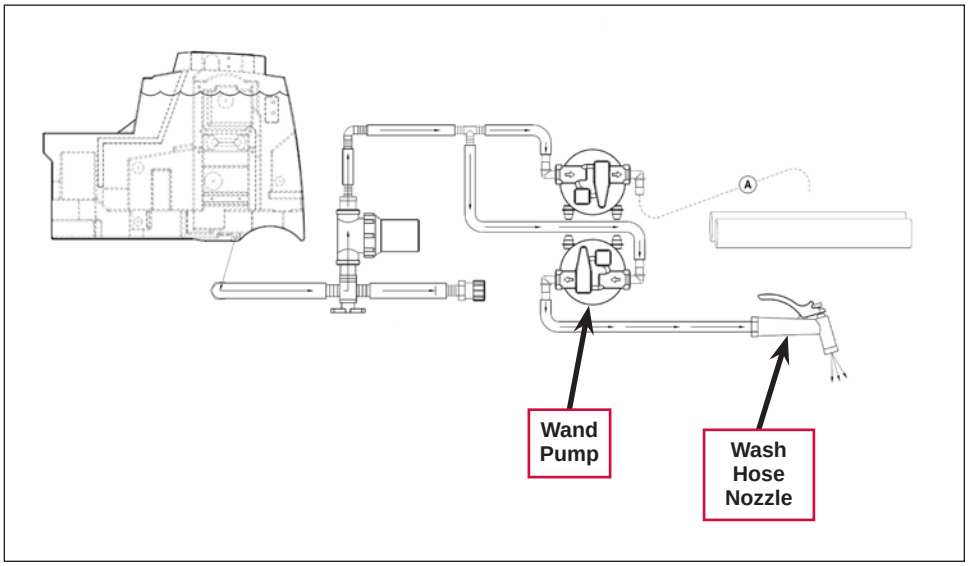

## DustGuard™ Spray Nozzles

The DustGuard™ system uses a separate **Mist Pump** (M5) to pump solution to the **Mist Spray Nozzles** at the side brooms. The **Mist Pump** will switch on whenever the side broom system is switched on.

Note that on machines equipped with the extended scrub option, the **Mist Pump** will shut off when the solution tank runs out of clean solution.

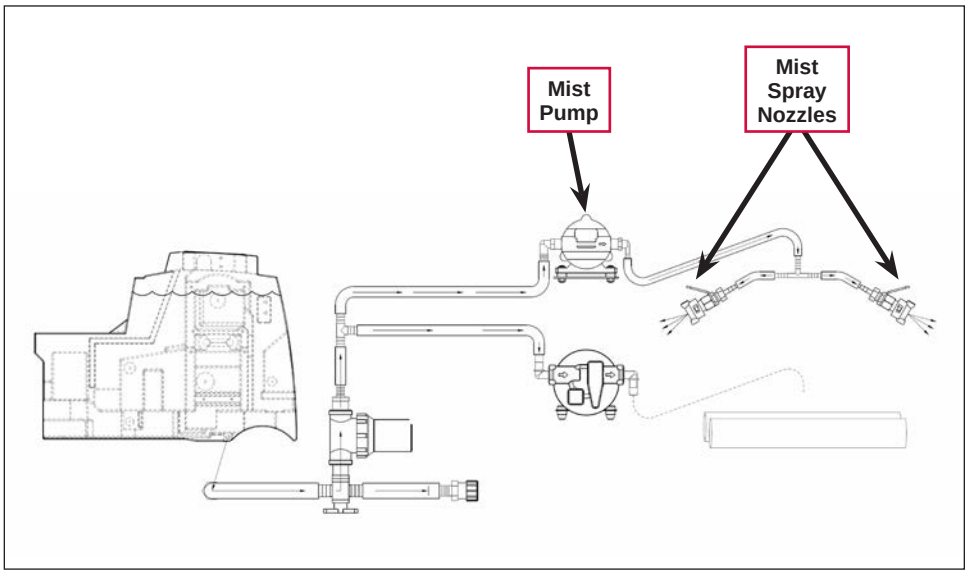


## Solution System Wiring Diagram

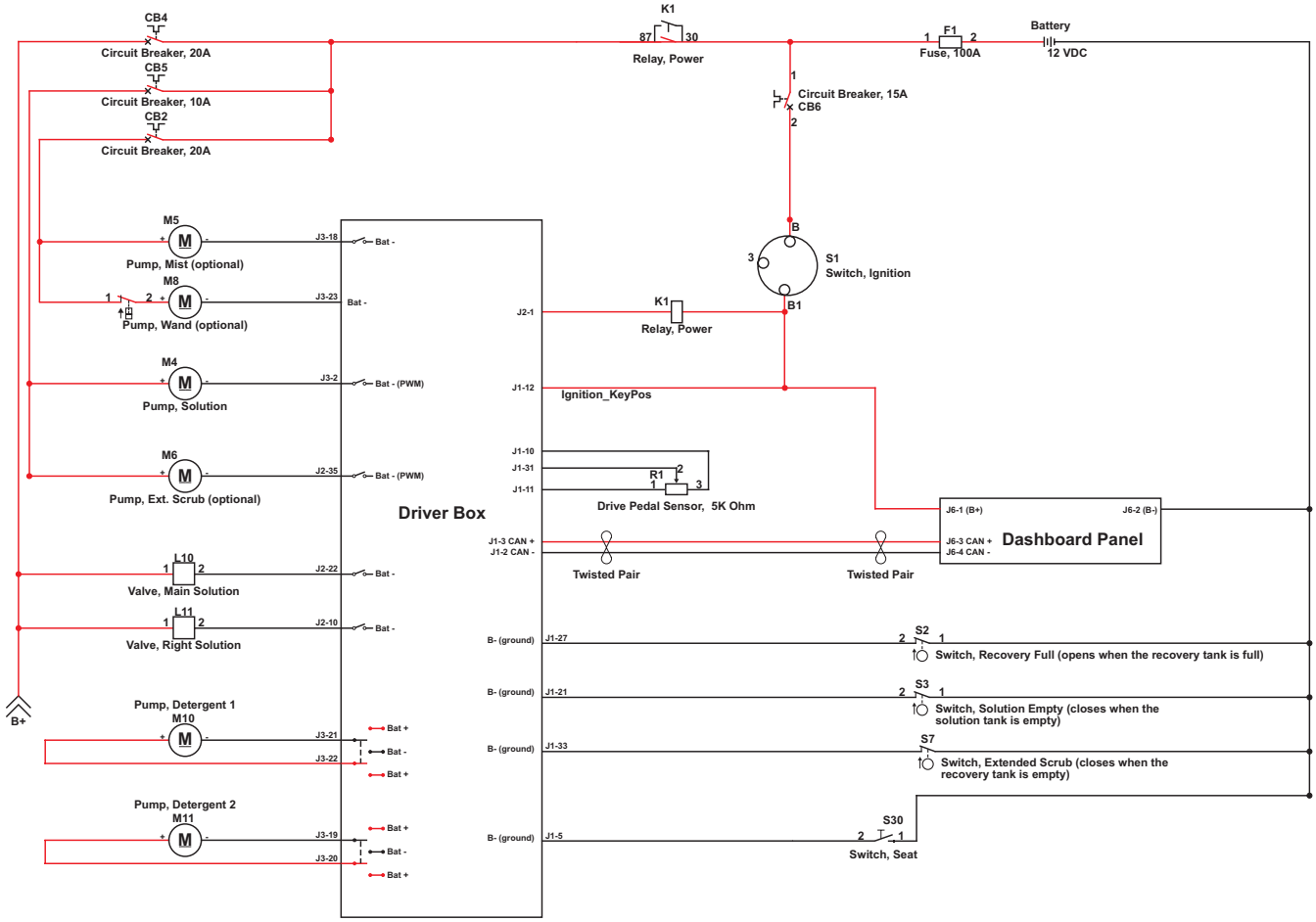

# Circuit Descriptions

## Main Solution System

The **Solution Pump M4** and **Main Solution Solenoid Valve L10** control the solution flow to the scrub brushes. Note that **L10** is not a proportional valve and is either on or off. The voltage from **J3-2** on the Driver Box to the **Solution Pump M4** is a PWM voltage proportional to the selected solution flow rate. The following conditions must be met to allow the main solution system to operate:

- The **Driver Box** must receive a signal from the **Dashboard Panel** via the CAN Bus that the Operator has actuated the scrub or solution system.
- The **Driver Box** must receive a signal from the **Drive Pedal Sensor R1** that the drive pedal has been moved from the neutral position.
- The **Solution Empty Switch S3** must be open (solution tank not empty).

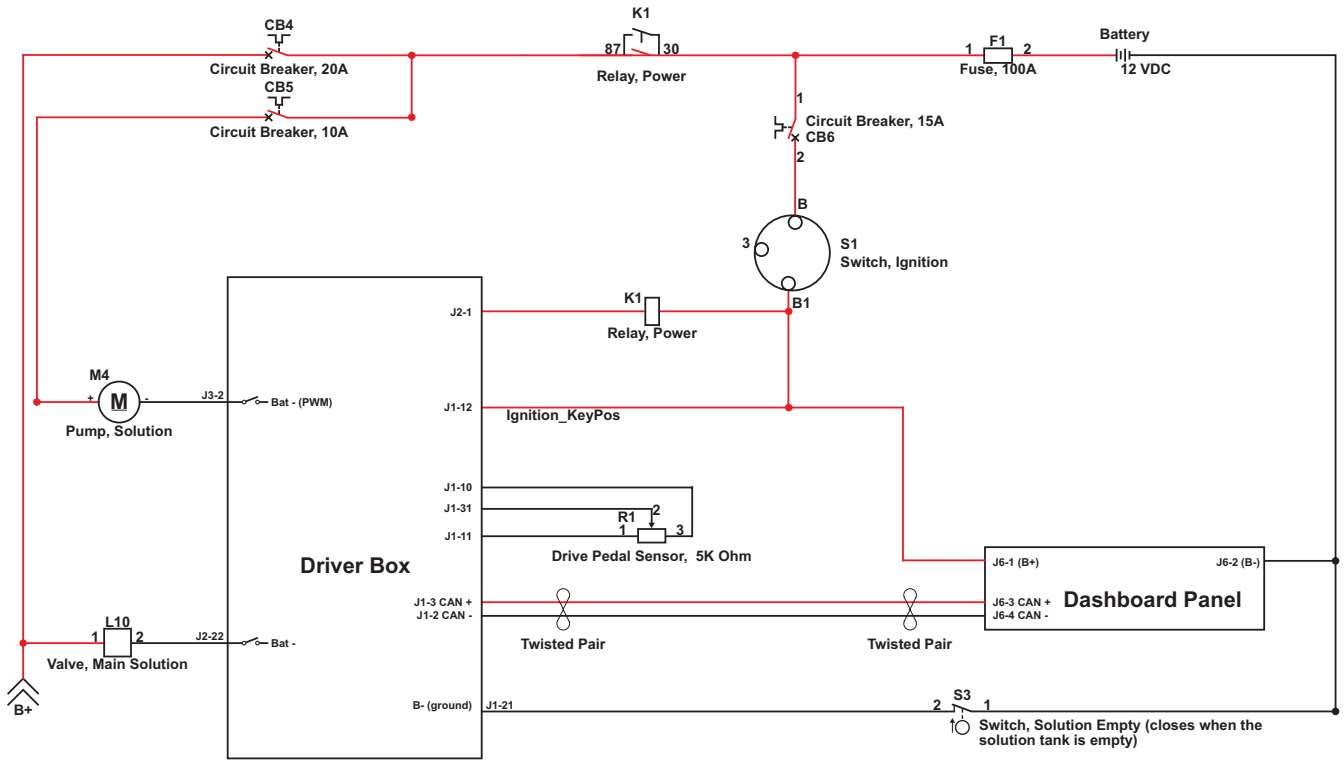

## *Detergent System*

The **Detergent Pumps M10** and **M11** receive voltage from **J3-19**, **J3-20**, **J3-21** and **J3-22** on the Driver Box. Note that the voltage to the **Detergent Pumps** changes polarity to "extend" (deliver detergent) and "retract" the pump.

Pump timing is designed so the pumps will alternate between cycles to deliver detergent in a more even distribution. A pumping cycle for a given pump is defined as an extend time, followed by a retract time, followed by a dwell time.

- Extend time – the time that the pump is being extended and is pumping detergent (80 ms fixed period).
- Retract time – the time that the pump is being retracted (50 ms fixed period).
- Dwell time – the period of time that a given pump is in the off state between pumping cycles.

In addition, there is an Interval Time which is defined as the delay from one **Detergent Pump** turning off to the second **Detergent Pump** turning on. Hence, an interval of 0 indicates that one pump should turn on without delay when the other pump turns off. The Interval Time is what controls the combined detergent flow rate from both pumps, and comes from a lookup table based on the current solution flow rate and detergent ratio.

The following conditions must be met for the **Detergent Pumps** to operate:

- The detergent system must be installed and enabled.
- The **Driver Box** must receive a signal from the **Dashboard Panel** via the CAN Bus that the Operator has actuated the scrub or solution system.
- The **Driver Box** must receive a signal from the **Drive Pedal Sensor R1** that the drive pedal has been moved from the neutral position.

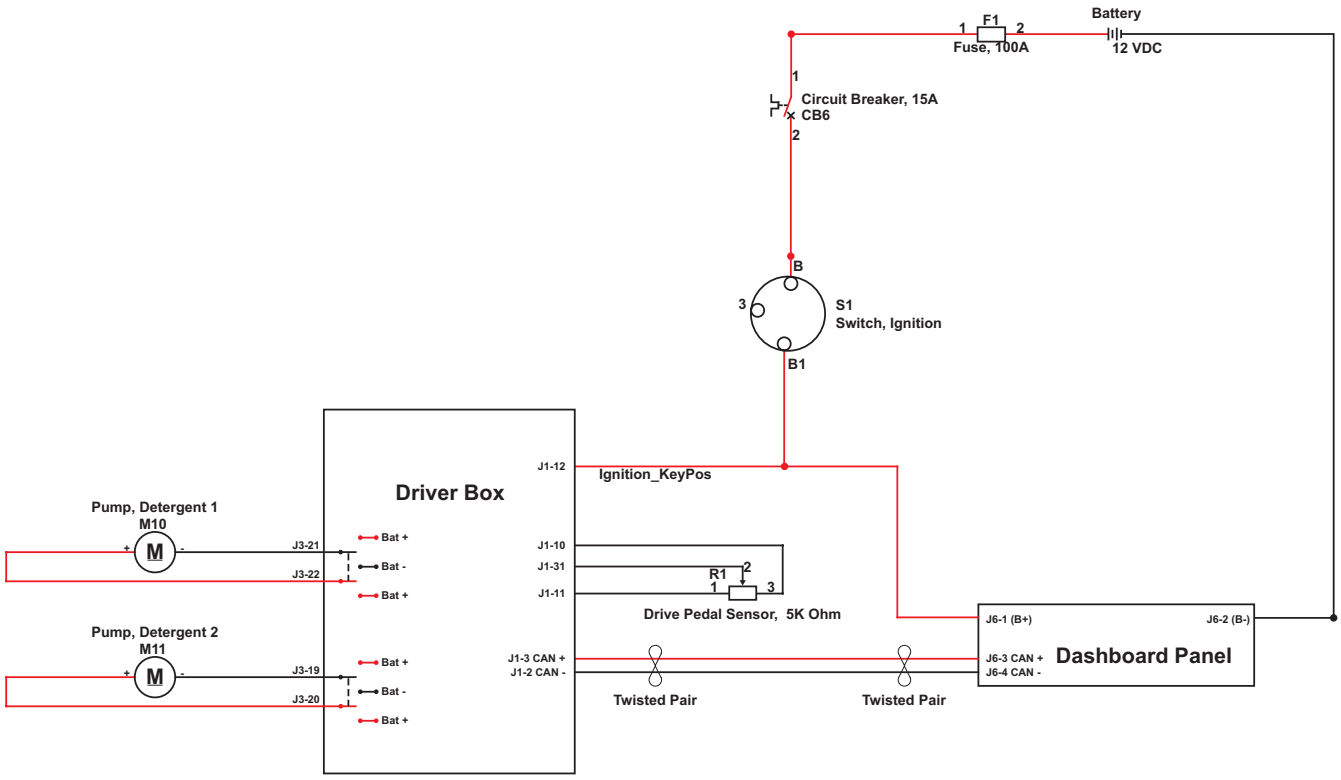

## *Extended Scrub System*

The **Extended Scrub Pump M6** pumps recovered water from the recovery tank to the brushes. The following conditions must be met for the extended system to operate:

- The extended scrub system must be installed and enabled.
- If the machine is set to the **USE CLEAN FIRST** mode, the **Solution Empty Switch S3** must be closed (the solution tank is empty).
- The **Extended Scrub (Float) Switch S7** must be open (adequate water supply in the recovery tank).
- The **Driver Box** must receive a signal from the **Dashboard Panel** via the CAN Bus that the Operator has actuated the scrub or solution system.
- The **Driver Box** must receive a signal from the **Drive Pedal Sensor R1** that the drive pedal has been moved from the neutral position.

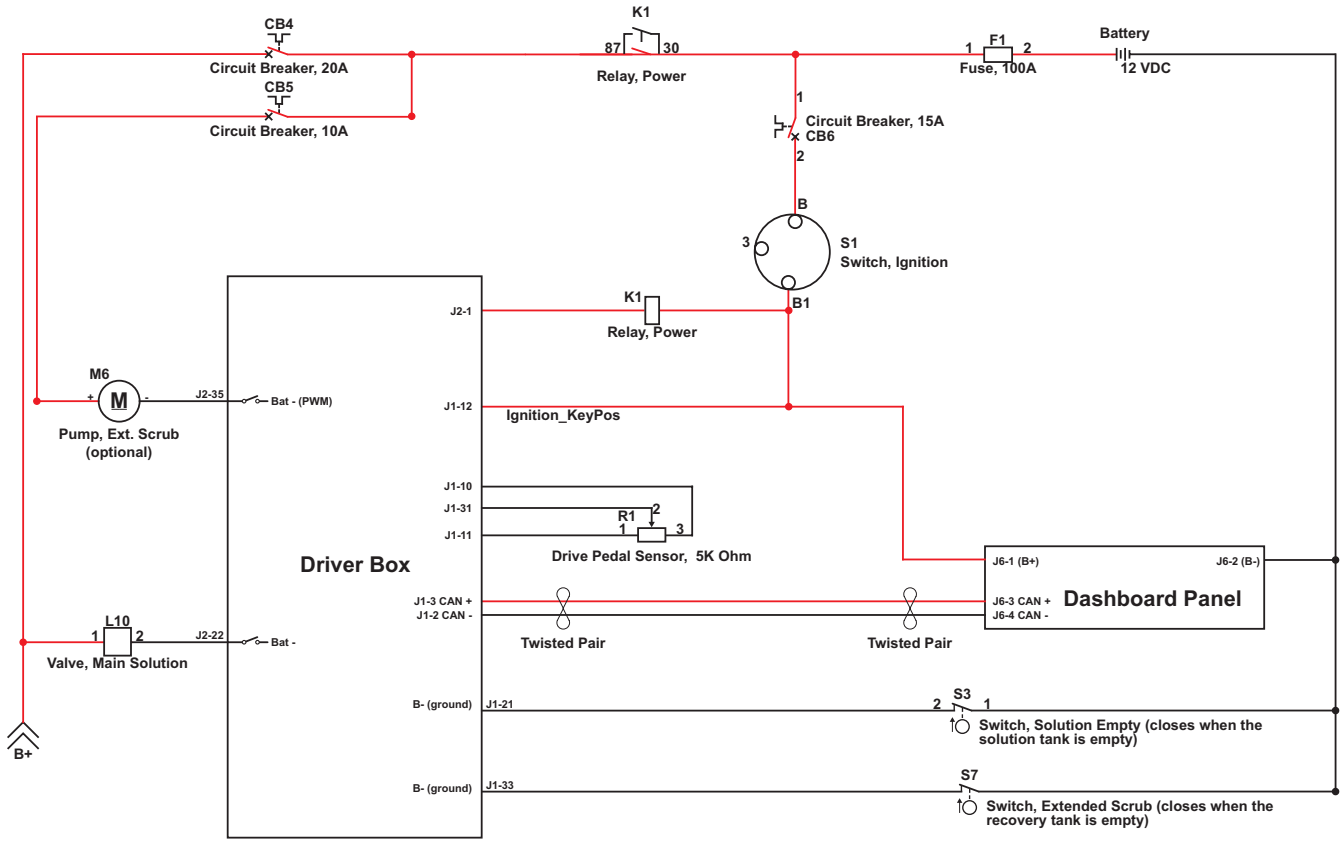

## *Right Side Scrub*

The **Right Solution Solenoid Valve L11** controls the solution flow from the **Solution Pump M4** to the optional right side scrub brush. Note that **L11** is not a proportional valve and is either on or off. The following conditions must be met for solution to flow to the right side scrub brush:

- The side scrub system must be installed and enabled.
- The **Driver Box** must receive a signal from the **Dashboard Panel** via the CAN Bus that the Operator has enabled the main scrub and side scrub systems.
- The **Driver Box** must receive a signal from the **Drive Pedal Sensor R1** that the drive pedal has been moved from the neutral position.

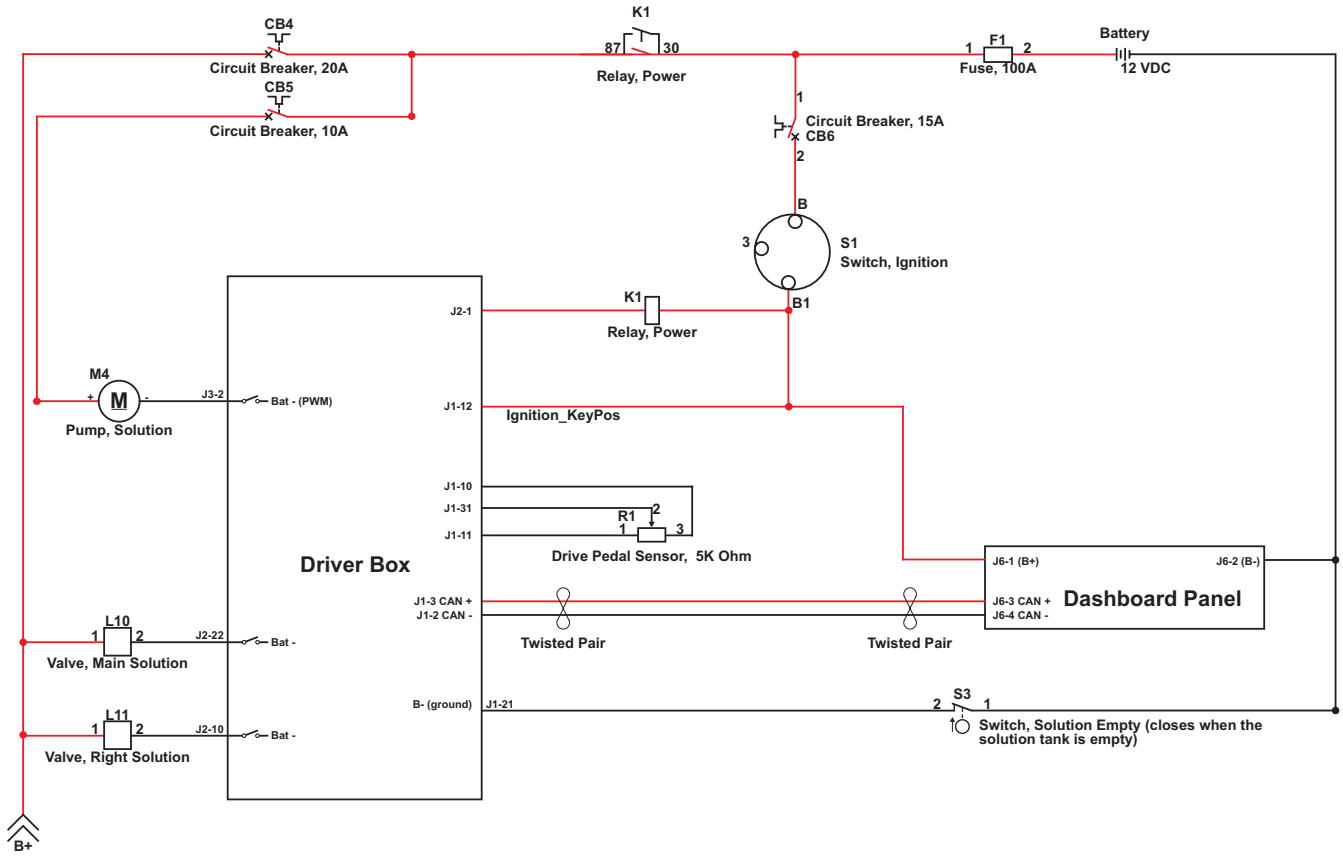

## *Wash Hose System*

The **Wand Pump M8** has it own internal pressure switch that switches on the **Wand Pump** when the wash hose nozzle is opened and the pressure in the wash hose drops to 40 psi. When the wash hose nozzle is closed and the pressure in the wash hose reaches 60 psi, the pressure switch shuts off the **Wand** Pump. The key switch must be on for the Wand Pump to operate.

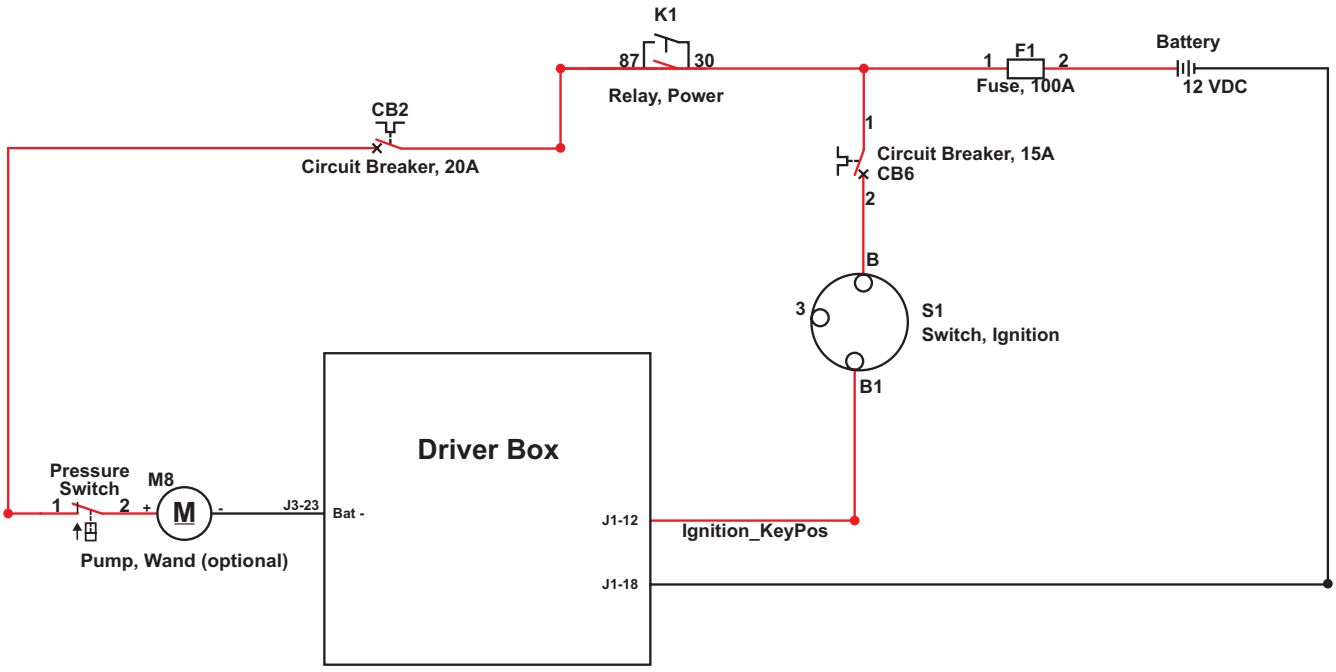

## *DustGuard™ System*

The **Mist Pump M5** pumps solution to the two DustGuard™ nozzles adjacent to the side brooms while sweeping to reduce dust. The following conditions must be met for the **Mist Pump** to operate:

- The DustGuard™ system must be installed and enabled.
- The **Driver Box** must receive a signal from the **Dashboard Panel** via the CAN Bus that the Operator has enabled the side brooms.
- The **Driver Box** must receive a signal from the **Drive Pedal Sensor R1** that the drive pedal has been moved from the neutral position.

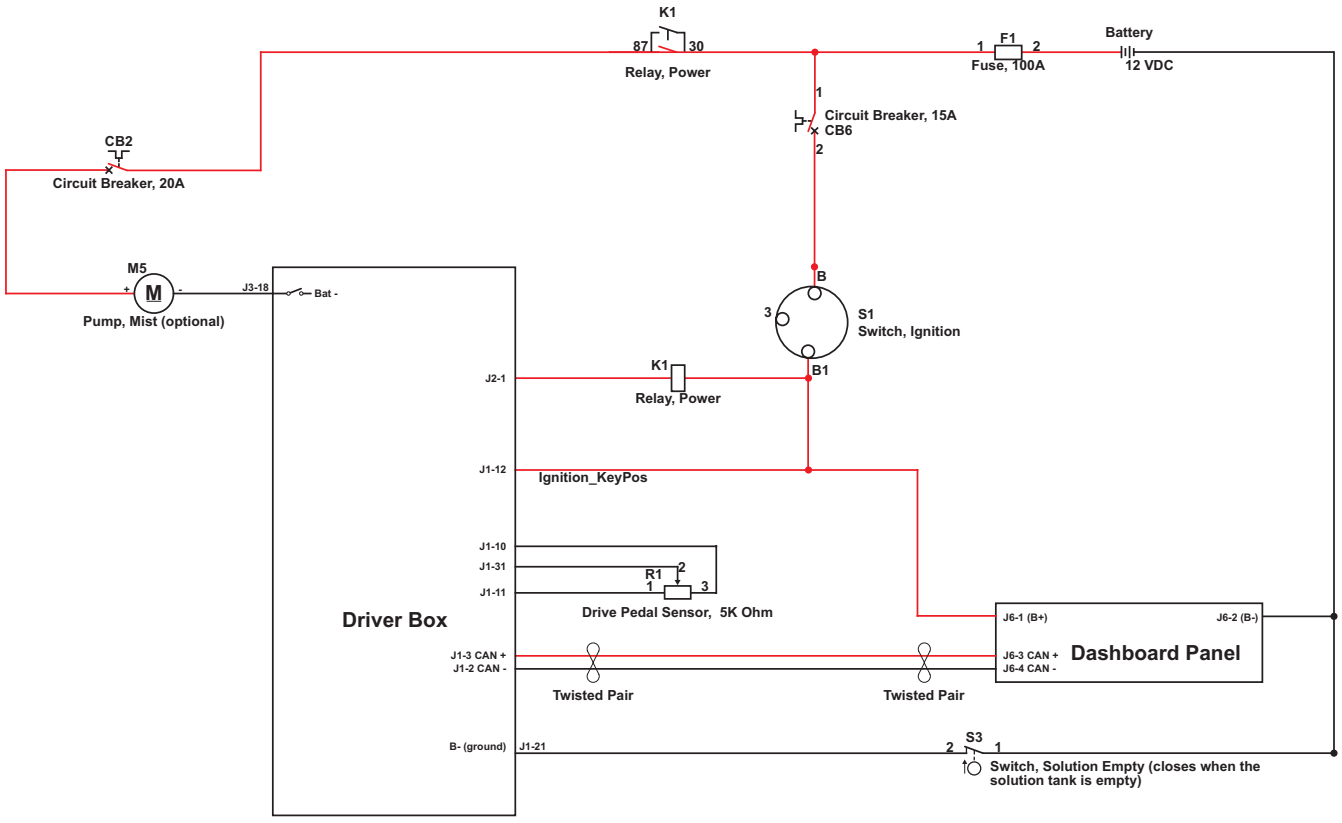

# *Component Locations*

**Extended Scrub Pump M6**

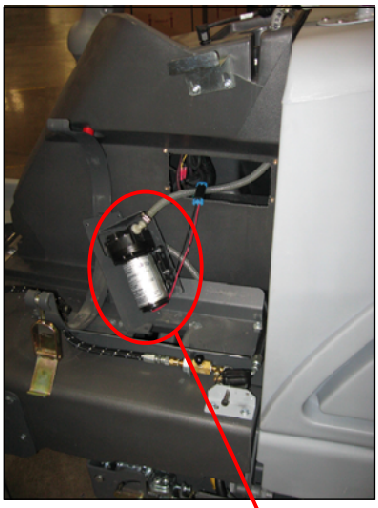

**Extended Scrub (Float) Switch S7**

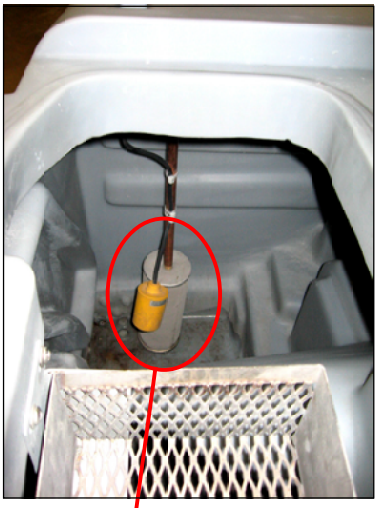

**Recovery Tank Full Switch S2**

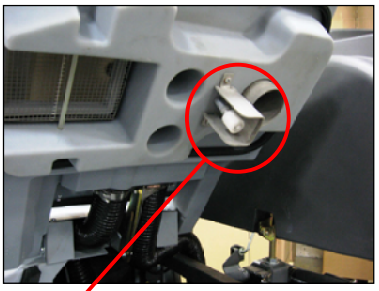

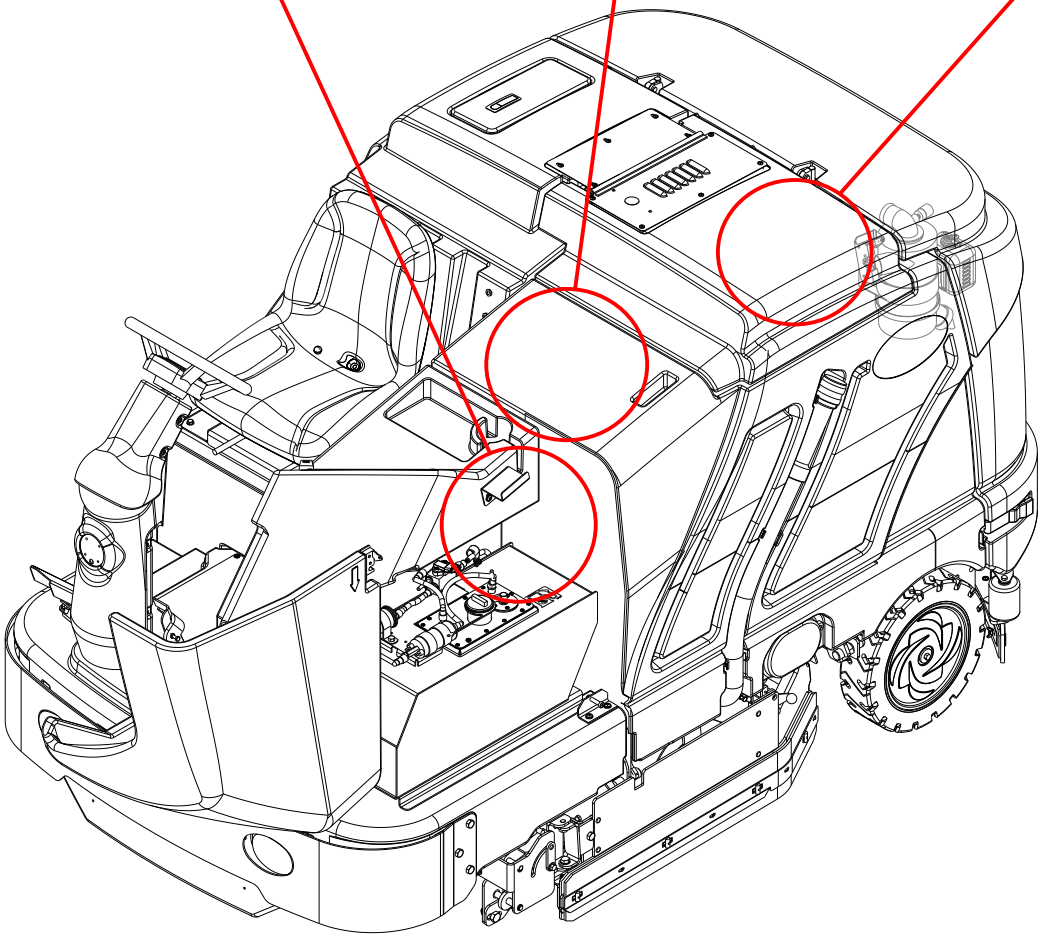

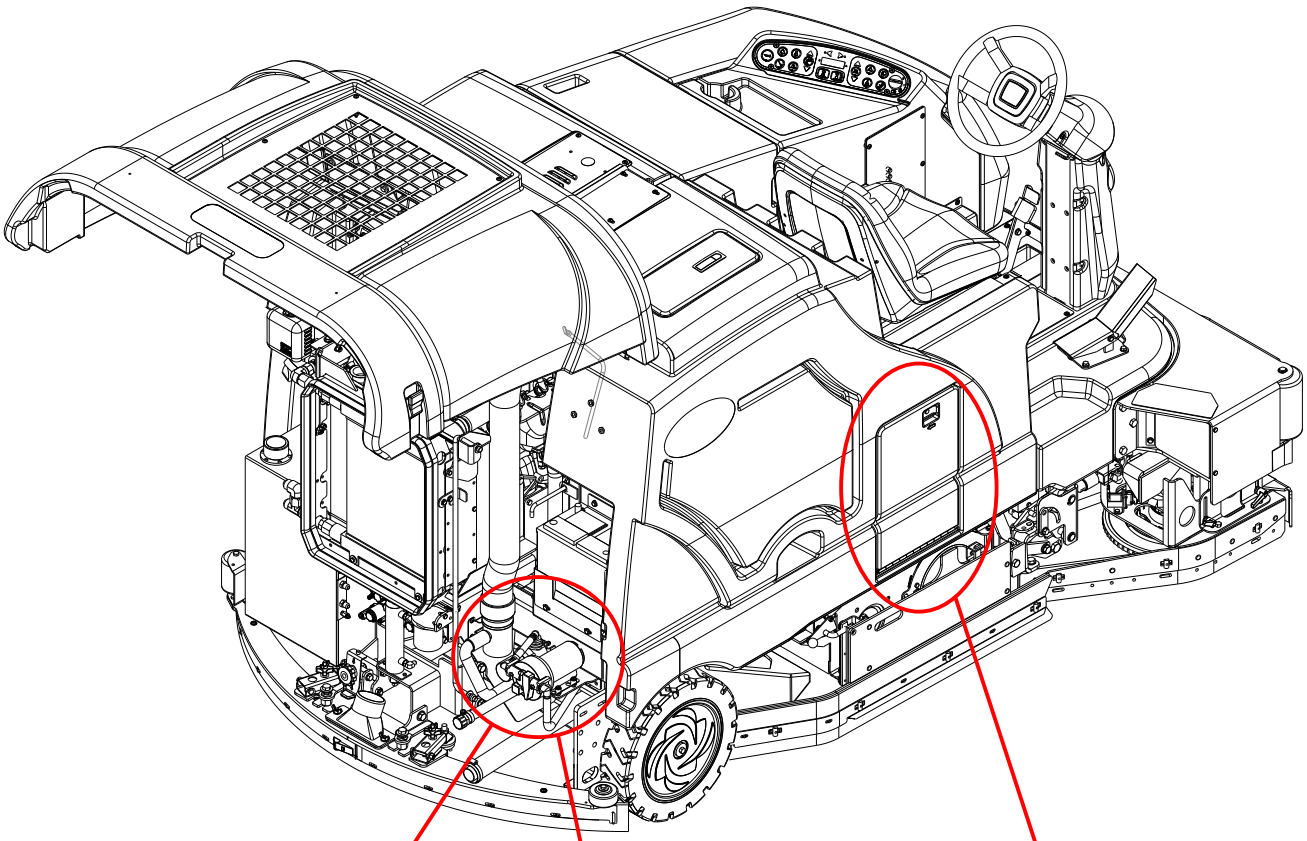

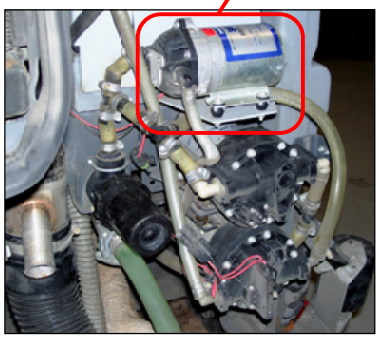

**Mist Pump M5 and Solution Filter**



**Solution Pump M4 (top) Wand Pump M8 (bottom)**



**Detergent Pumps M10 and M11 (behind cover panel)**

# Maintenance and Adjustments

***Warning!*** ***Before performing any machine maintenance or adjustments, make sure the key switch is off, the key is removed from the machine and the parking brake is engaged.***

## To Clean the Solution Filter Screen

1. Close the solution shutoff valve.

***Note:*** *Place a suitable container underneath the filter to catch any solution that may leak from the hoses.*

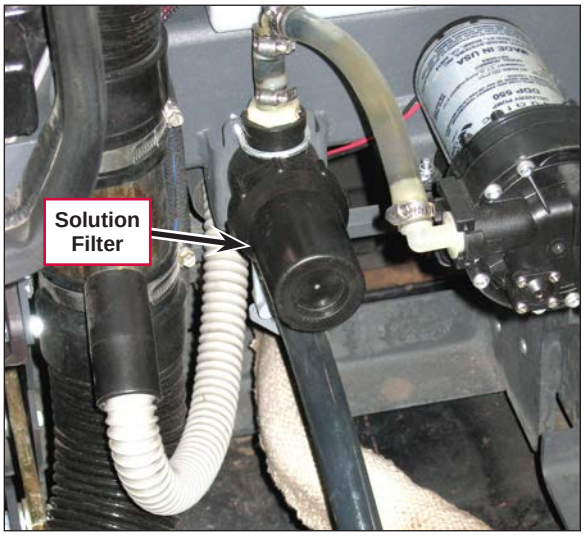


2. Unscrew the **Filter Cover** and remove the **Filter Cover** and screen from the filter base.
3. Clean any accumulated dirt or debris from the screen.
4. Reinstall the screen into the filter base.
5. Make sure the rubber washer is installed correctly in the **Filter Cover**, then reinstall and hand-tighten the **Filter Cover**.

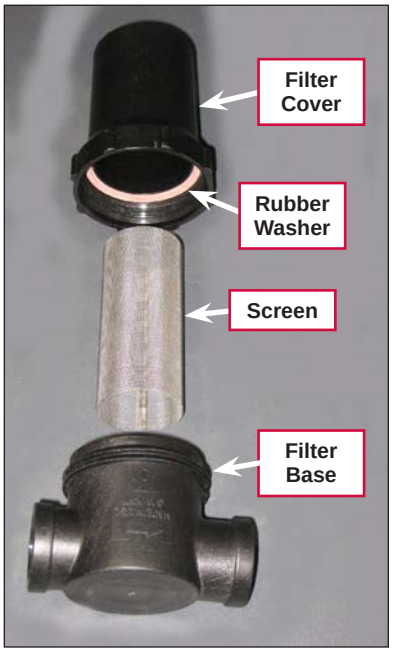

## To Clean the Extended Scrub System Strainer

1. Open the recovery tank cover.
2. Rinse any accumulated material off of the extended scrub system strainer using normal water hose pressure.
3. Close the recovery tank cover.

## To Clean the Solution Delivery Trough

Clean the holes in the solution delivery trough to ensure even solution distribution.

## To Clean the DustGuard™ Spray Nozzles

***Note:*** *Place a suitable container underneath the nozzles to catch any water that may leak from the hoses.*

1. Hold the **Plastic Nozzle Adapter** with a **7/8" Wrench** to keep it from rotating in the **Spray Nozzle Bracket** when you remove the **Nozzle Cap**. This will maintain the correct spray pattern orientation of the **Spray Nozzle**.
2. Rotate the **Nozzle Cap** one-quarter turn counterclockwise (as viewed from the front of the machine) to remove the **Nozzle Cap**, **Spray Nozzle** and **Check Valve Strainer** from the **Plastic Nozzle Adapter**.
3. Rinse the **Nozzle Cap**, **Spray Nozzle** and **Check Valve Strainer** in clean water to remove any accumulated dirt or sediment. If necessary, rinse or soak the components in vinegar or other commercial cleaner to remove any mineral deposits.
4. Reassemble the DustGuard™ nozzles by following the above steps in reverse order.

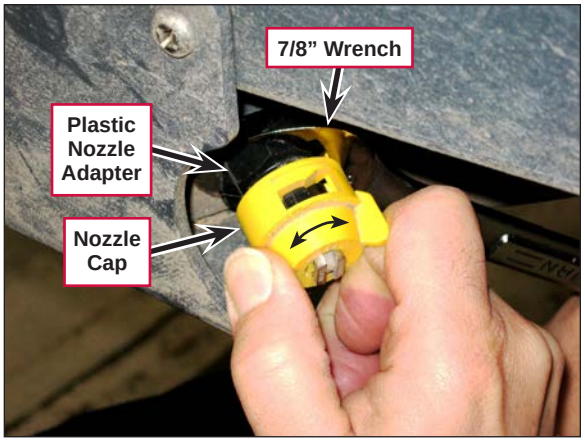


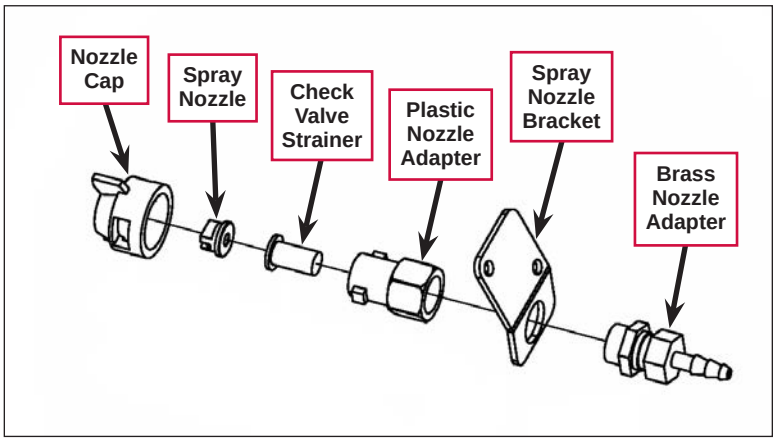


## To Adjust the DustGuard™ Spray Nozzles

The **Spray Nozzles** should be approximately 10 to 20 degrees from vertical as shown in order to spray the water evenly top to bottom in front of the side brooms. The spray pattern should wet the floor across the whole width of the side broom. If the spray pattern is not correct:

1. Carefully rotate the **Plastic Nozzle Adapter** with a **7/8" Wrench** to orient the **Spray Nozzle**.

2. After you rotate the **Plastic Nozzle Adapter**, make sure the **Brass Nozzle Adapter** is holding the **Plastic Nozzle Adapter** securely in the **Spray Nozzle Bracket**. Tighten the **Brass Nozzle Adapter** to the **Plastic Nozzle Adapter** as necessary.

## Detergent System Maintenance

You will need to purge the system of the previous detergent when switching to a different detergent.

***Service Note:*** *Move the machine over a floor drain before purging because a small amount of detergent will be dispensed in the process.*

### To Purge When Changing Detergents (the scrub system must be off)

1. Disconnect and remove the detergent cartridge.
2. Turn the key switch on and wait a few seconds for the start-up sequence to finish.
3. Press and hold the detergent switch for approximately two seconds.



4. Release the switch when the detergent **Purge Icon** appears on the display and the detergent indicator starts flashing.



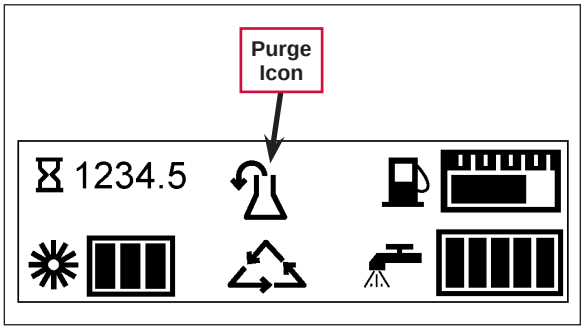


***Note:*** *Once activated, the purge process takes at least 10 seconds for AXP™/EDS systems, and at least 20 seconds for EcoFlex™ systems. Normally one purge cycle is adequate to purge the system.*

### *To Purge Weekly (the scrub system must be off)*

1. Disconnect and remove the detergent cartridge.
2. Install and connect a cartridge filled with clean hot water.
3. Turn the key switch on and wait a few seconds for the start-up sequence to finish.
4. Press and hold the detergent switch for approximately two seconds. 
5. Release the switch when the detergent **Purge Icon** appears on the display and the detergent indicator starts flashing. 

***Note:*** *The **Detergent Box** has **Detergent Level Viewing Slots** for viewing the amount of detergent remaining in the **Detergent Cartridge(s)**. When the detergent level is nearing the bottom of the **Detergent Level Viewing Slots**, refill or replace the **Detergent Cartridge(s)**.*

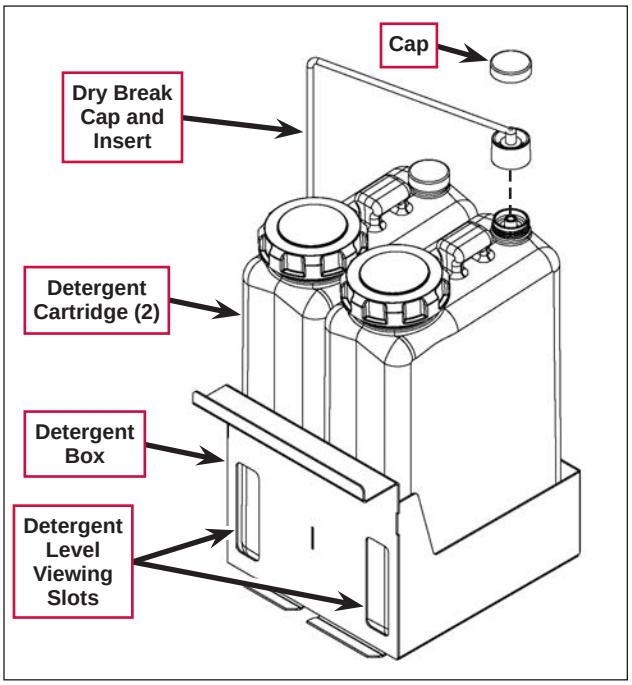

### *To Change the Detergent Mix Ratio (the scrub system must be on)*

1. Press and hold the detergent switch for two seconds.



2. Release the switch once the detergent indicator begins flashing.



3. While the light is flashing, press and release the detergent switch to cycle through the available detergent mixture ratios. Once the desired ratio is displayed, stop pressing the detergent switch to lock in the displayed ratio. The detergent system will return to normal operation within three seconds.

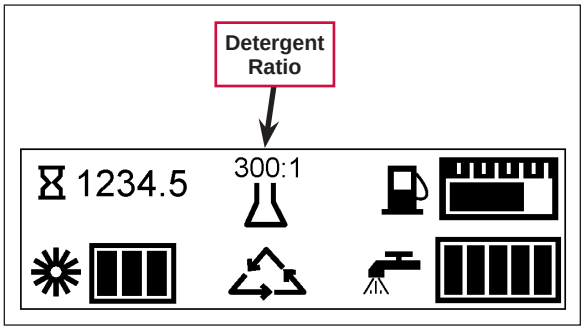


***Note:*** *On AXP™ and EDS systems, the detergent mixture will be displayed for approximately 10 seconds each time the scrub mode changes, or each time the detergent switch is pressed. On EcoFlex™ systems, the detergent mixture will be displayed whenever the detergent system is on.*

*Once set, the detergent flow rate automatically increases and decreases with the solution flow rate, but the detergent mix ratio will remain the same. If an Operator would prefer the flexibility of setting different detergent dilutions ratios for different solution flow rates, this specific programming option can be found in the* ***Control System*** *section.*

***Note:*** *During scrubbing, the detergent system can be turned off at any time by pressing the detergent switch to allow scrubbing with water only. No detergent is dispensed until the scrub system is activated and the drive pedal is pushed forward.*

***Service Note:*** *Follow the* ***To Purge Weekly*** *instructions above if the machine is going to be stored for an extended period of time, or if you plan to discontinue use of the detergent system.*

# Troubleshooting

## General Troubleshooting

| Problem | Cause | Correction |
|---|---|---|
| No solution to the main brushes | No voltage to the main solution pump | 1. Check the wiring and circuit breakers upstream of the pump.<br>2. Check the J3-2 output from the Driver Box. |
| | Solution pump(s) over current (fault code 00 displayed) | • Check the M4 main solution pump wiring for problems; M4 wire colors (+GRN/BRN and - GRN/BLU).<br>• Check the pump current draw (11.5 amps max.) and replace as necessary.<br>• Check pump motor for short circuits and replace as necessary. |
| | Main solution solenoid valve over current (fault code 07 displayed) | • Check L10 solenoid coil wiring for problems (+ ORN and - YEL/GRN).<br>• Check coil resistance. If less than 6 ohms, replace. |
| | The solution shutoff valve is plugged or inoperative. | Clean or replace the solution shutoff valve. |
| Inadequate solution flow to the main brushes | The solution filter screen is plugged. | Clean the solution filter screen. |
| | Plugged solution hose | Check and clear the solution hoses as necessary. |
| No solution to the DustGuard™ spray nozzles | Side sweep mist pump over current (fault code 04 displayed) | • Check Pump motor M5 wiring for problems (+ BLU and - YEL/BLK).<br>• Check the mist pump current draw (3.9 amps max. at full load). Note: The mist pump is a 24V pump operating at 12V. |
| | No voltage to the mist pump | 1. Check the wiring and circuit breakers upstream of the pump.<br>2. Check the J3-18 output from the Driver Box. |
| | Spray nozzles plugged | Clean the spray nozzles. |

| Problem | Cause | Correction |
|---|---|---|
| No solution to the main brushes in the extended scrub mode | The extended scrub function is not installed in the configuration menu. | Install the extended scrub function in the configuration menu. |
| | Solution pump(s) over current (fault code 00 displayed) | • Check the M6 extended scrub pump wiring for problems; M6 wire colors (+GRN/BRN and - GRA/ORN).<br>• Check the pump current draw (11.5 amps max.) and replace as necessary. |
| | The extended scrub (float) switch (S7) is not open to J1-33 on the Driver Box. | The switch should be closed when the recovery tank is empty, and open when there is an adequate water supply in the recovery tank.<br>If the continuity through the switch in its open and closed positions is not correct:<br>1. Check the wiring and repair as necessary.<br>2. If the wiring is OK, replace the switch. |
| | No voltage to the extended scrub pump | 1. Check pump motors for short circuits and replace as necessary. Check the wiring and circuit breakers upstream of the pump.<br>2. Check the J2-35 output from the Driver Box. |
| | The stainer in the recovery tank is dirty or plugged. | Remove and clean the strainer. |
| | *Note: The Solution Pump (-) line provides a switched ground return for the pump. When the solution pump is "ON" a 7.8 KHz signal with a varying duty cycle and average voltage will appear between pin J3-2 and B+. Measuring with a DC voltmeter will give a signal in the range of 0 to 12 volts. Changing the flow rate solution bars on the LCD should produce a relative increase or decrease of the meter reading.* | |
| No solution to the right side brush | Right side solution solenoid valve over current (fault code 08 displayed) | • Check L11 solenoid coil wiring for problems (+ ORN and - BLU/YEL).<br>• Check coil resistance. If less than 10 ohms, replace. |
| Inadequate solution flow to the right side brush | Plugged solution hose and/or nozzle | Check and clear/clean the solution hoses and nozzles as necessary. |

| Problem | Cause | Correction |
|---|---|---|
| No detergent flow to the solution system | The detergent system not installed in the configuration menu. | Install the detergent system in the configuration menu. |
| | The detergent supply lines are clogged. | Check the detergent lines and clean/replace as necessary. |
| | The detergent cartridge is empty. | Refill the cartridge or switch the dry break cap and insert into a full cartridge. |
| | No voltage to the detergent pump(s) | 1. Check the wiring from J3-21 and J3-22 to detergent pump 1, and the wiring from J3-19 and J3-20 to detergent pump 2.<br>2. Check the J3-19, J3-20, J3-21 and J3-22 outputs from the Driver Box. |
| | Detergent pump 1 over current (fault code 31 displayed)<br><br>Detergent pump 2 over current (fault code 32 displayed) | • Check the detergent pump wiring for problems; #1 pump wire colors (+RED/WHT and - RED/BLU), #2 pump wire colors (+ BLK/ YEL and - BLK/RED).<br>• Check the detergent pump motors for short circuit and replace as necessary. |
| | *Note: The signal controlling the detergent pump is extremely complex and field troubleshooting should a take a functional approach. Substitute with a known good detergent pump to check operation. If the known good pump does not operate, and the wiring and control inputs to the detergent system are correct, check the Driver Box. Check the resistance of the detergent pump before replacing the Driver Box so as not to damage it if the pump is defective.* | |
| No solution flow from the wash hose wand | Wand pump over current (fault code 03 displayed) | • Check Pump motor M8 wiring for problems (+ BLU and - BLU/RED).<br>• Check pump motor for short circuit and replace as necessary.<br>• Test current draw 12.5 amps max., 12V at full load. |
| | No voltage to the wand pump | 1. Check the wiring and circuit breakers upstream of the pump .<br>2. Check the J3-23 output from the Driver Box. |
| | Pressure switch not operating correctly | Check the pressure switch and replace as necessary. |

## *Main and Right Side Solution Valves and Solution Pump*

The following conditions must be met for the **Main** and **Right Side Solution Valves** and **Main Solution Pump** to operate:

- The **Key Switch** must be on.
- The engine must be running.
- The scrub on mode must be selected on the **Dashboard Panel**.
- The drive pedal must be activated (moved from the neutral position).

**MAIN & RIGHT SIDE SCRUB BRUSH SOLUTION VALVES & PUMP**

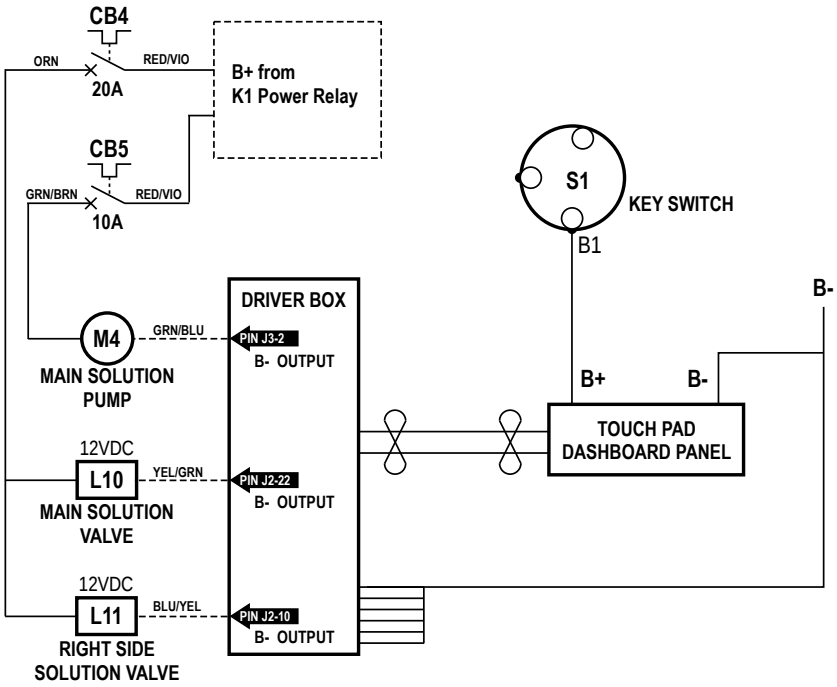

# Specifications

## Component Specifications

| Component | Specifications | |
|---|---|---|
| Solution Pump M4<br>Extended Scrub Pump M6 | Voltage – 12 VDC | |
| | Max. Current – 11.5 amps @ 60 psi | |
| | Open Flow – 3.4 GPM | |
| | Internal Bypass – 60 psi | |
| Main Solution Solenoid Valve L10 | Voltage – 12 VDC | |
| | Coil Power – 17W | |
| | Current – 1.5 amps | |
| | Nominal Coil Resistance – 8 ohms | |
| Right Side Solution Solenoid Valve L11 | Voltage – 12 VDC | |
| | Coil Power – 11W | |
| | Current – 1.0 amps | |
| | Nominal Coil Resistance – 12 ohms | |
| Wand Pump M8 | Voltage – 12 VDC | |
| | Max. Current – 12.5 amps @ 60 psi | |
| | Flow Rate – 2.0 GPM @ 50 psi | |
| | Pressure Switch | On: 40 psi |
| | | Off: 60 psi |
| Mist Pump M5 | Voltage – 24 VDC (run at 12 VDC) | |
| | Max. Current – 3.9 amps | |
| DustGuard™ Spray Nozzles | Standard nozzle size .015” dia. Flow volume – .033 gal/min [0.125 L/min] @ 40 psi.<br>Optional nozzle size .026 Dia. Flow volume – .1 gal/min [.379 L/min] @ 40 psi. | |

## *Solution and Detergent Delivery Rates*

<table>
<tr><td colspan="2" rowspan="5">Solution system flow rates (five settings)</td><td>Setting 1 – 1.6 gal/min [6 L/min]</td></tr>
<tr><td>Setting 2 – 1.9 gal/min [7.2 L/min]</td></tr>
<tr><td>Setting 3 – 2.3 gal/min [8.7 L/min]</td></tr>
<tr><td>Setting 4 – 2.7 gal/min [10.2 L/min]</td></tr>
<tr><td>Setting 5 – 3.1 gal/min [11.7 L/min]</td></tr>
<tr><td rowspan="3">AXP™/EDS and EcoFlex™ detergent systems</td><td rowspan="3">Refillable cartridge, (quantity 2), 2.5 gal [9.5 L]</td><td>Available dilution ratios:</td></tr>
<tr><td>03%, .04%, .05%, .07%, .08%, 1.0%, 1.5%, 2.0%, 3.0%, 3.8%</td></tr>
<tr><td>300:1, 256:1, 200:1, 150:1, 128:1, 100:1, 64:1, 50:1, 32:1, 26:1</td></tr>
</table>

# Squeegee System

## Functional Description

### Overview

The squeegee system includes the squeegee assembly, squeegee mounting assembly, squeegee lift weldment and the squeegee lift cylinder.

The squeegee assembly is mounted at the bottom rear of the machine and picks up the water from the floor. Two squeegee blades (front and rear) pick up the water and direct it into the vacuum hose which carries it to the recovery tank. The squeegee lift cylinder raises and lowers the squeegee as appropriate for the operation being performed.

### Squeegee System Wiring Diagram

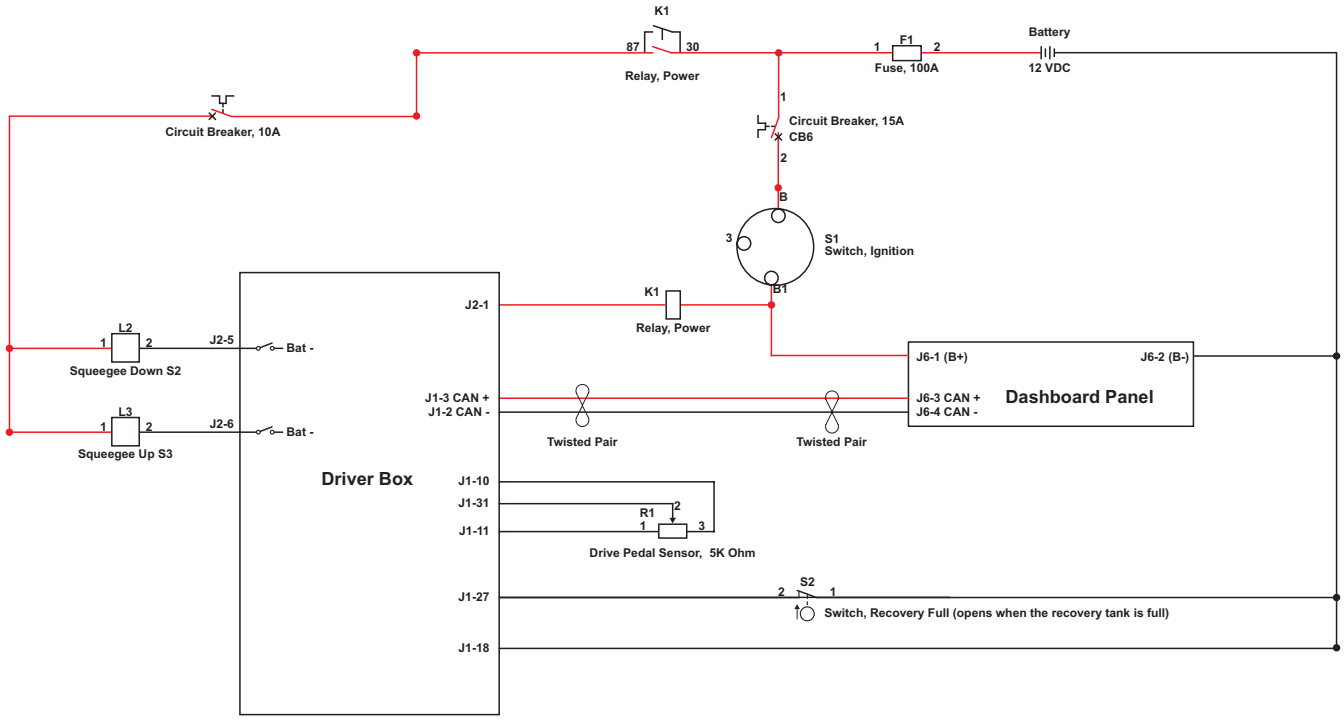


### Circuit Description

For the squeegee system to work, the key switch must be on, the engine must be running and the **Driver Box** must receive a signal from the **Dashboard Panel** via the CAN Bus that the Operator has actuated the scrub system, vacuum switch (old style control panel) or the vacuum/wand switch (new style control panel).

# Squeegee System Hydraulic Diagrams

## Squeegee Down

When the main scrub or recovery system is actuated, the **Squeegee Down Solenoid Valve L2** energizes to direct the oil to the top port on the **Squeegee Lift Cylinder**. This extends the **Squeegee Lift Cylinder** and lowers the squeegee to the floor. The oil discharged from the **Squeegee Lift Cylinder** returns to the **Reservoir**.

The hydraulic pressure to lift and lower the squeegee is created by:

- The 250 psi propulsion piston pump charge pressure relief valve, and,
- The back pressure created by the return flow through the cooler and filter en route to the piston pump charge port.

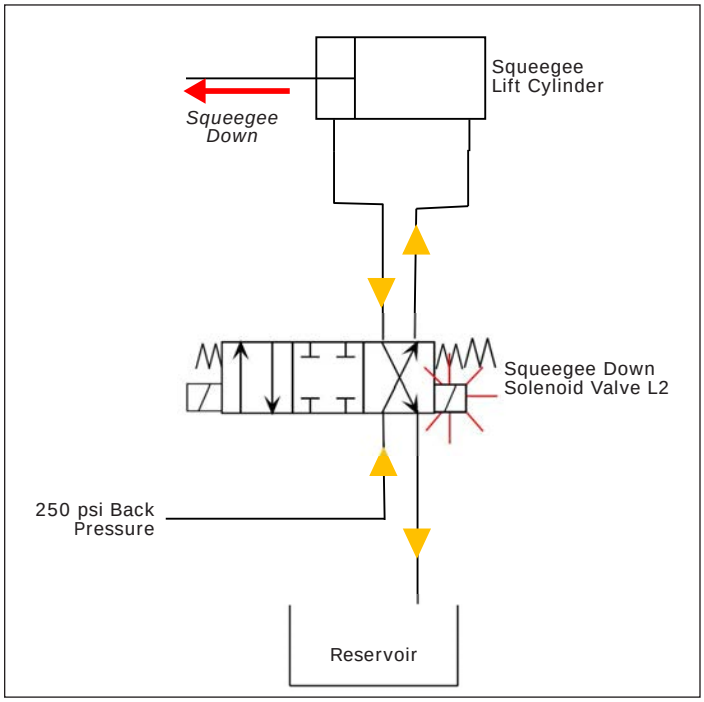


## Squeegee Up

To retract the squeegee (scrub off, recovery off, machine in reverse), the **Squeegee Up Solenoid Valve L3** energizes to direct the oil to the bottom port on the **Squeegee Lift Cylinder**. This retracts the **Squeegee Lift Cylinder** and raises the squeegee up off of the floor. The oil discharged from the **Squeegee Lift Cylinder** returns to the **Reservoir**.

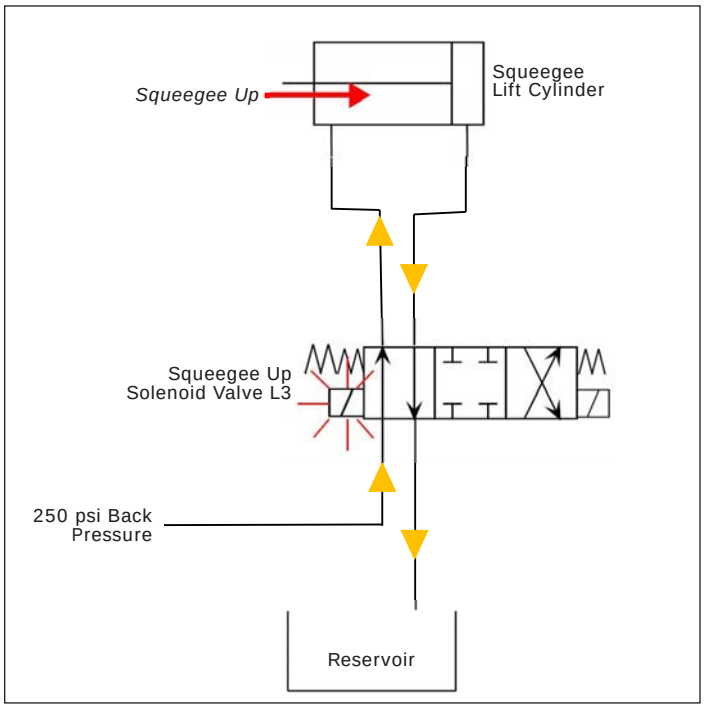

### *Squeegee Locked*

When the squeegee is up (retracted), both the **Squeegee Down Solenoid Valve L2** and the **Squeegee Up Solenoid Valve L3** are de-energized to shut off the flow of oil to the **Squeegee Lift Cylinder** and lock the squeegee in the up position.

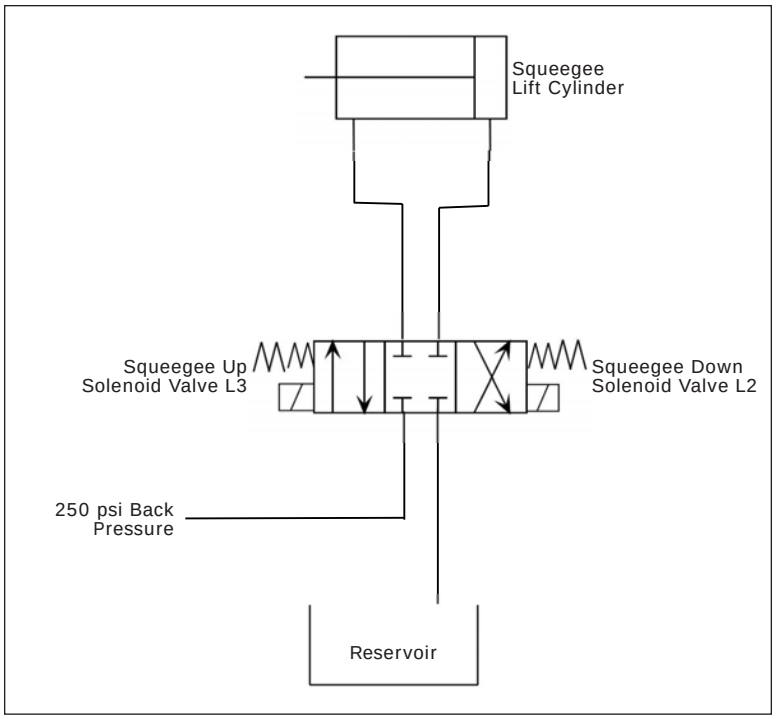

## *Component Locations*

The **Squeegee Assembly** mounts onto the **Squeegee Mount Assembly**.

The **Squeegee Mount Assembly** is fastened to the **Squeegee Lift Weldment**. The **Squeegee Lift Cylinder** is connected to the **Squeegee Lift Weldment** and raises and lowers the **Squeegee Lift Weldment** and attached **Squeegee Assembly** as required.

**Parallel Arms**, bushings, bearings and fasteners connect the **Squeegee Lift Weldment** to the machine frame.

The **Squeegee Tilt Adjust Knob** and the **Squeegee Height Adjust Knobs** allow you to adjust the angle and height of the **Squeegee Assembly** to ensure that the wastewater is being picked up correctly.

(Refer to the *Squeegee Adjustment* section in the *Instructions for Use* for adjustment procedures.)

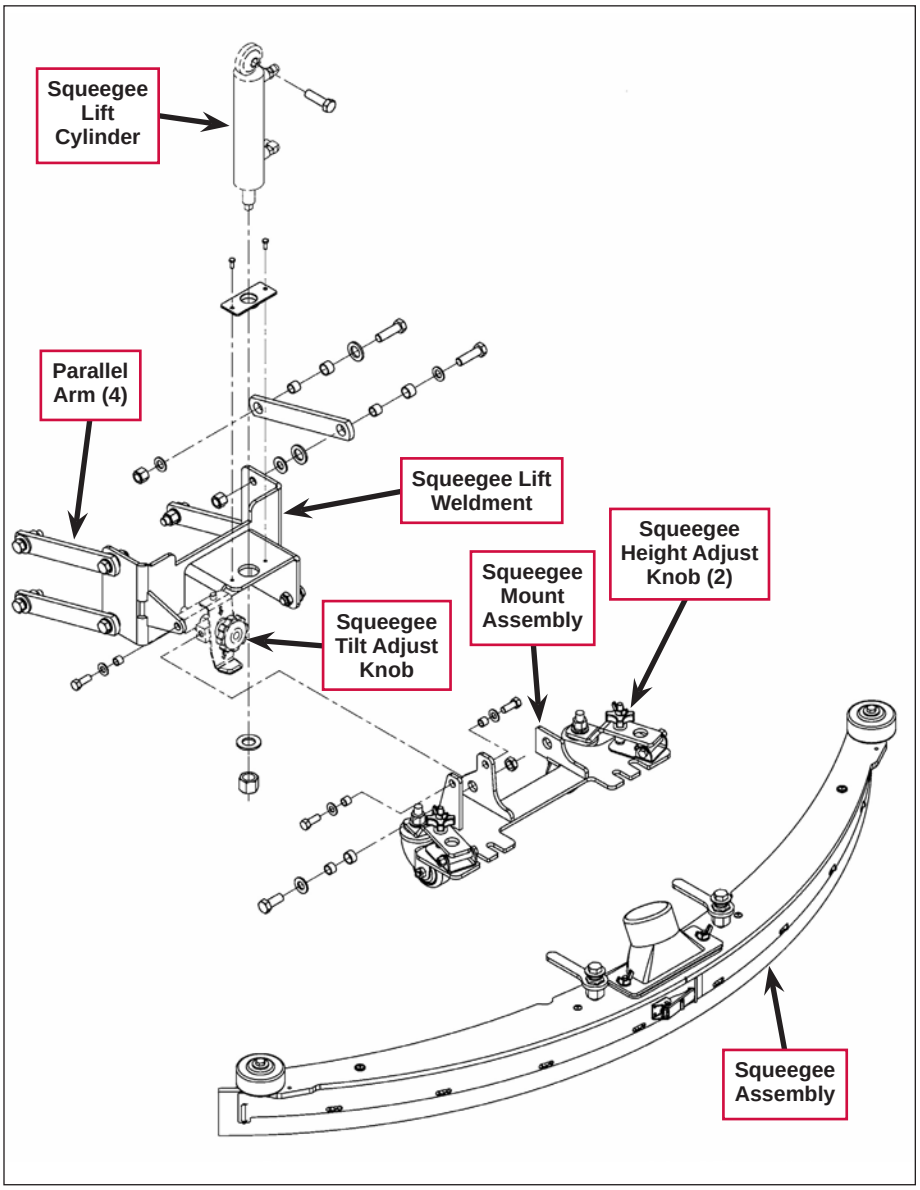

The **Squeegee Down Solenoid Valve S2** and the **Squeegee Up Solenoid Valve S3** that control the **Squeegee Lift Cylinder** are located on the hydraulic manifold at the rear of the machine as shown.

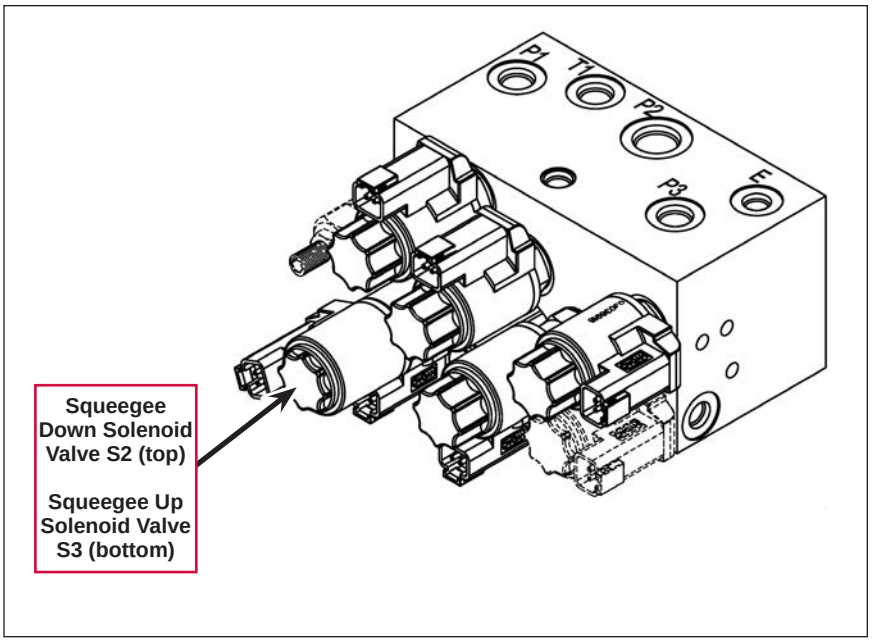


# Troubleshooting

## General Troubleshooting

| Problem | Cause | Correction |
|---|---|---|
| Poor Water Pick-up | The squeegee blades are torn or worn. | Check and replace the blades as necessary. |
| | The squeegee assembly is out of adjustment. | Readjust the squeegee. (Refer to the Instructions for Use.) |
| The squeegee system is not working. | Squeegee UP solenoid over current (fault code 11 is displayed) | • Check L3 solenoid coil wiring for problems (+ GRN/BRN and - BRN/GRN).<br>• Check coil resistance. If less than 6 ohms, replace. Also see ***Vacuum Fan Off and Squeegee Up*** electrical ladder detail. |
| | Squeegee DN solenoid over current (fault code 12 is displayed) | • Check L2 solenoid coil wiring for problems (+ GRN/BRN and - RED/GRA).<br>• Check coil resistance. If less than 6 ohms, replace. Also see ***Vacuum Fan On and Squeegee Down*** electrical ladder detail. |
| Squeegee will not rise | Solenoid L3 is not energizing or has failed | • Check L3 solenoid coil wiring for problems (+ GRN/BRN and - BRN/GRN).<br>• If there is voltage to L3, replace the solenoid. |
| | Pressure to the squeegee lift cylinder is too low. | Check the pressure at the charge port on the propulsion piston pump. Pressure should be 250 psi. If the pressure is too low, clean or replace the charge relief cartridge located on the wheel drive pump.<br>*Note: The squeegee may lift more slowly with the engine at idle*. |
| | The squeegee linkage is binding | Check the squeegee linkage and mounts and correct as necessary. |

## *Vacuum Fan On and Squeegee Down*

The following conditions must be met for the Vacuum Fan to run and for the squeegee to be lowered to the pick-up position:

- The **Key Switch** must be on.
- The engine must be running.
- The scrub on mode must be selected or the vacuum system switched on at the **Dashboard Panel**.
- The drive pedal must be activated (moved from the neutral position).

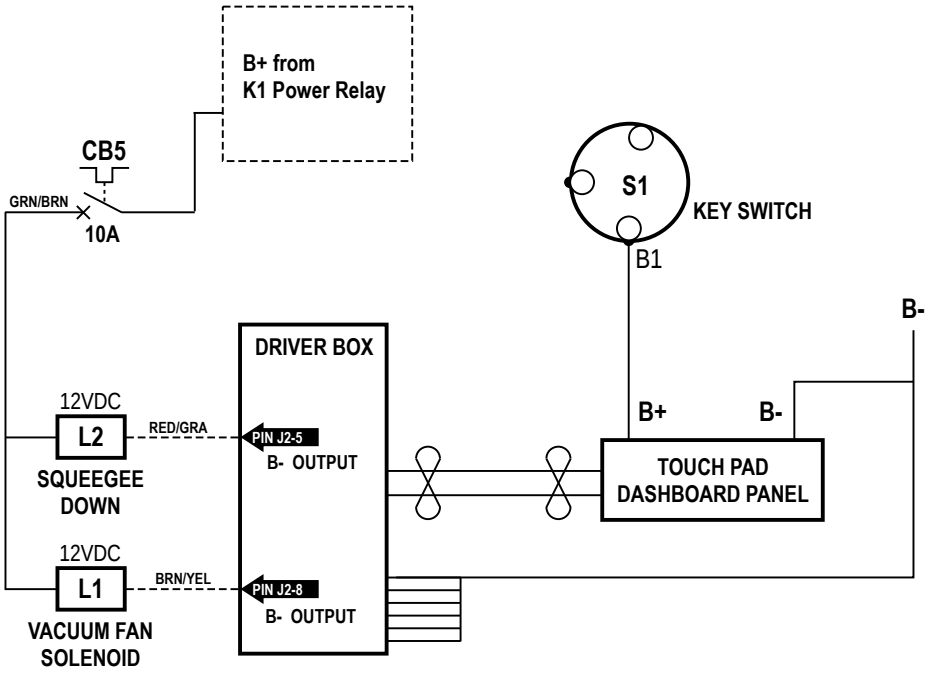


| Component | Current - Amps | Coil Resistance - Ohms |
|---|---|---|
| L1 | 1.5 Amps | 8 ohms |
| L2 | 1.5 Amps | 8 ohms |

## *Vacuum Fan Off and Squeegee Up*

The following conditions must be met for the Vacuum Fan to shut off and for the squeegee to be raised to the travel position:

- The **Key Switch** must be on.
- The engine must be running.
- The scrub off mode must be selected or the vacuum system switched off at the **Dashboard Panel**, or the drive pedal must be moved to the reverse position (squeegee will rise up).

The Vacuum Fan will shut off after a time delay once the drive pedal is in the neutral position. Note that if the seat switch is open, the Vacuum Fan will run continuously (regardless of the drive pedal being in neutral) to allow water pick-up with the Wand attachment.

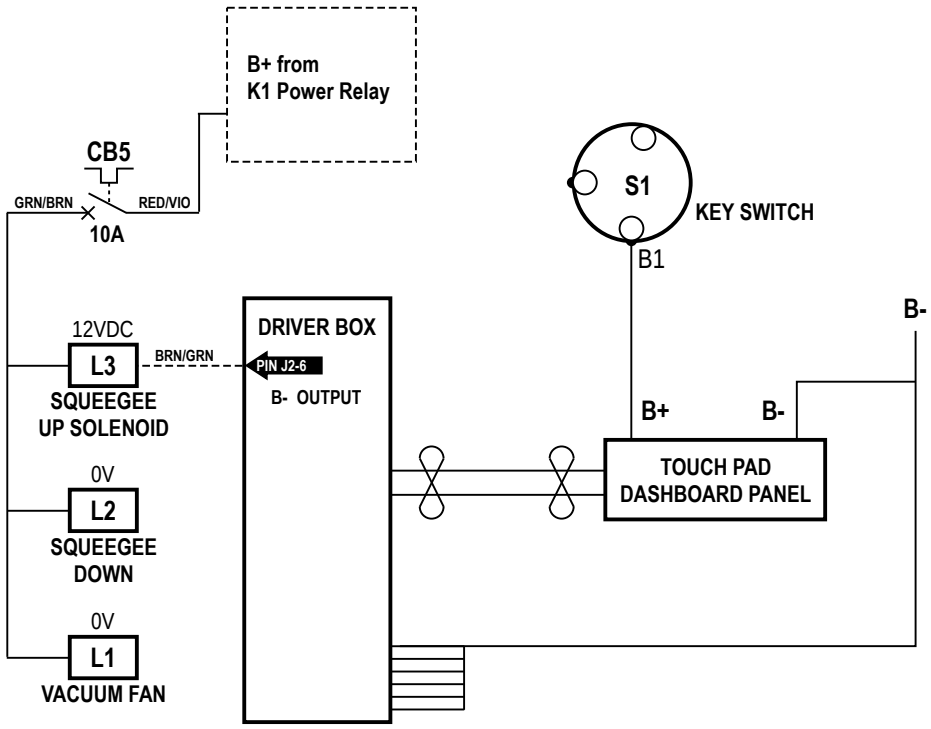


| Component | Current - Amps | Coil Resistance - Ohms |
|---|---|---|
| L3 | 1.5 Amps | 8 ohms |

## *Specifications*

| Component | Specifications |
|---|---|
| Squeegee Down Solenoid Valve L2 | Current – 1.5 amps |
| | Nominal Coil Resistance – 8 ohms |
| Squeegee Up Solenoid Valve L3 | Current – 1.5 amps |
| | Nominal Coil Resistance – 8 ohms |

# Steering System

## Functional Description

### Overview

The steering system includes the steering unit, **Steer Cylinder**, **Rack** and **Spur Gear**.

The steering wheel rotates the shaft on the steering pump which controls the oil flow to the **Steer Cylinder**. The **Steer Cylinder** extends and retracts the attached **Rack**, which then rotates the **Spur Gear** and attached **Drive Wheel Weldment** to turn the **Front Wheel**.

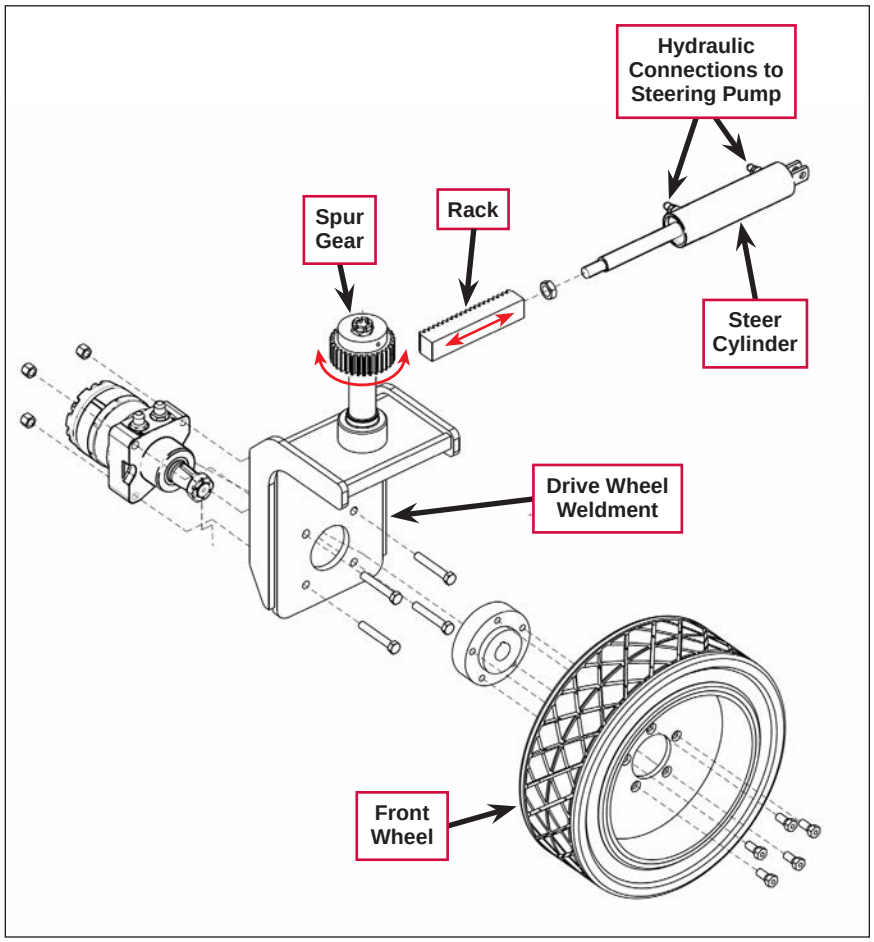

# Hydraulic Diagrams

## Steering System in Motion

When the engine is running and the Operator turns the steering wheel, the **Auxiliary Pump** sends oil through the **Priority Flow Divider** to the **Steering Unit**. The **Steering Unit** directs the oil to the **Metering Valve**, which then directs the oil to the appropriate side of the **Steer Cylinder** to turn the front wheel in the corresponding direction.

The oil returns through the **Steering Unit** and returns to the **Reservoir**.

The **Check Valve**, located in the **Steering Unit**, allows manual steering when the engine is off.

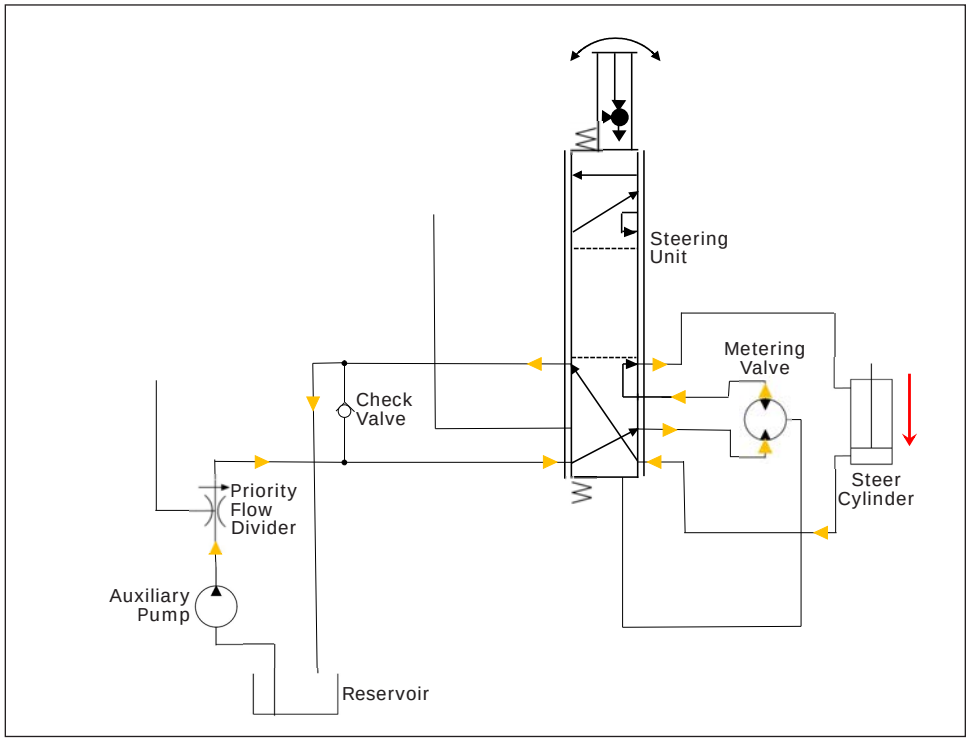


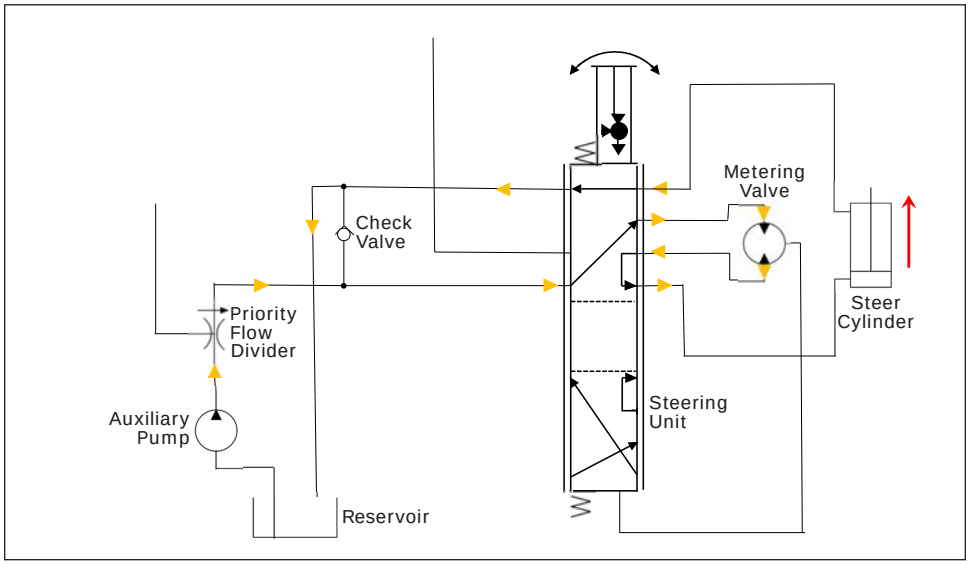

### Steering System Stationary

When the steering wheel is stationary, no oil is flowing through the **Steering Unit**, **Metering Valve** or **Steer Cylinder**.

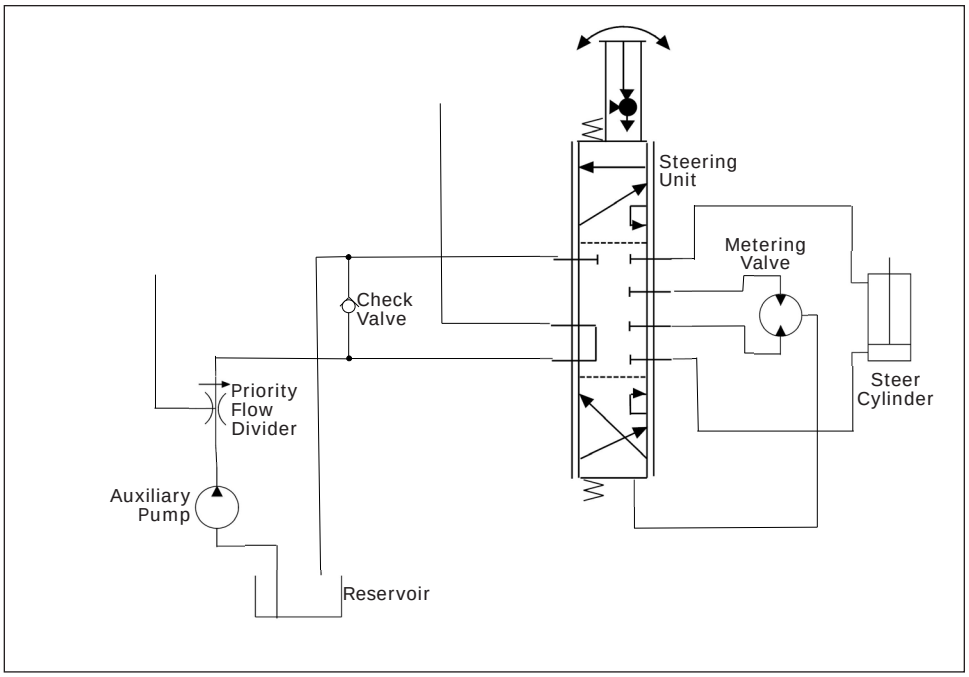


## Component Locations

### Steering Unit

The **Steering Unit** is driven by the steering wheel and is located in the steering column. The **Steering Unit** unit includes the internal metering valve.

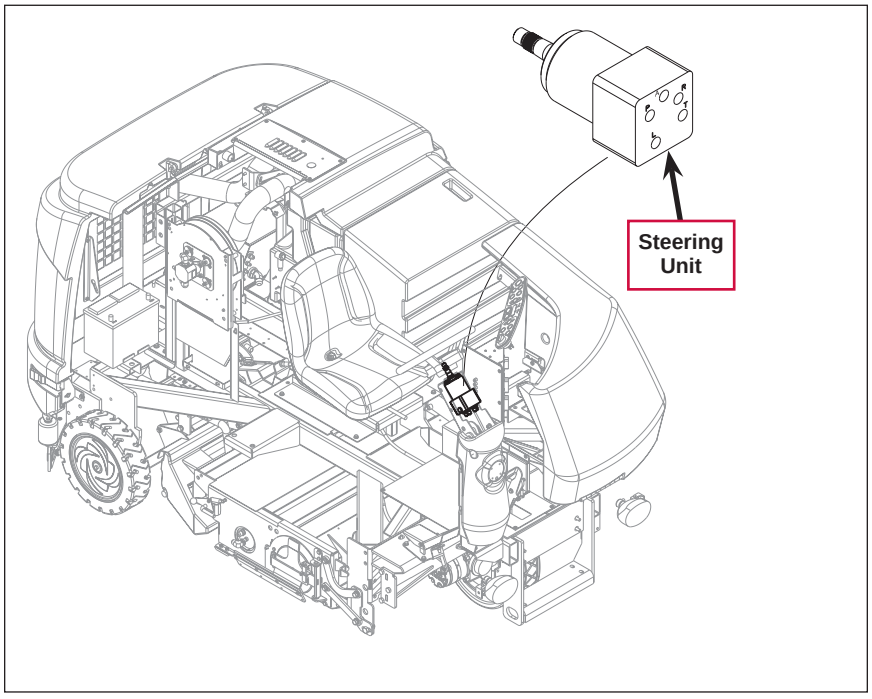

## Steer Cylinder

The **Steer Cylinder** is mounted horizontally and drives the rack and spur gear connected to the drive wheel assembly

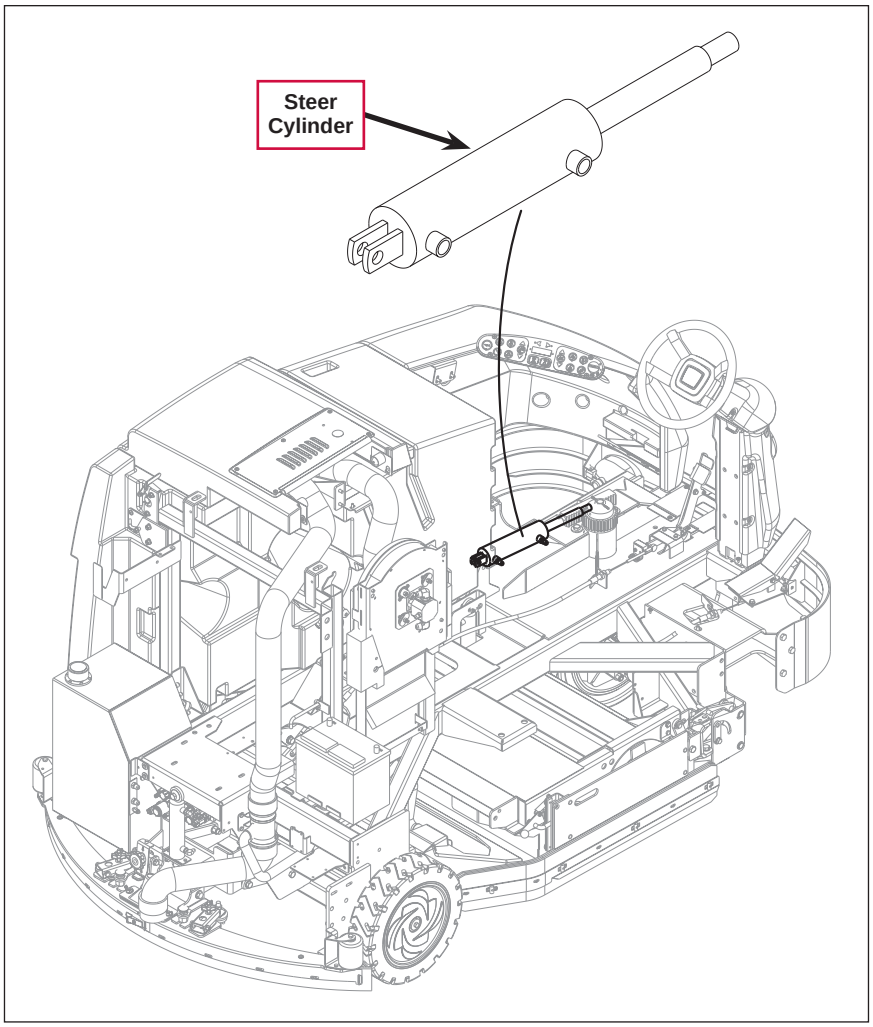


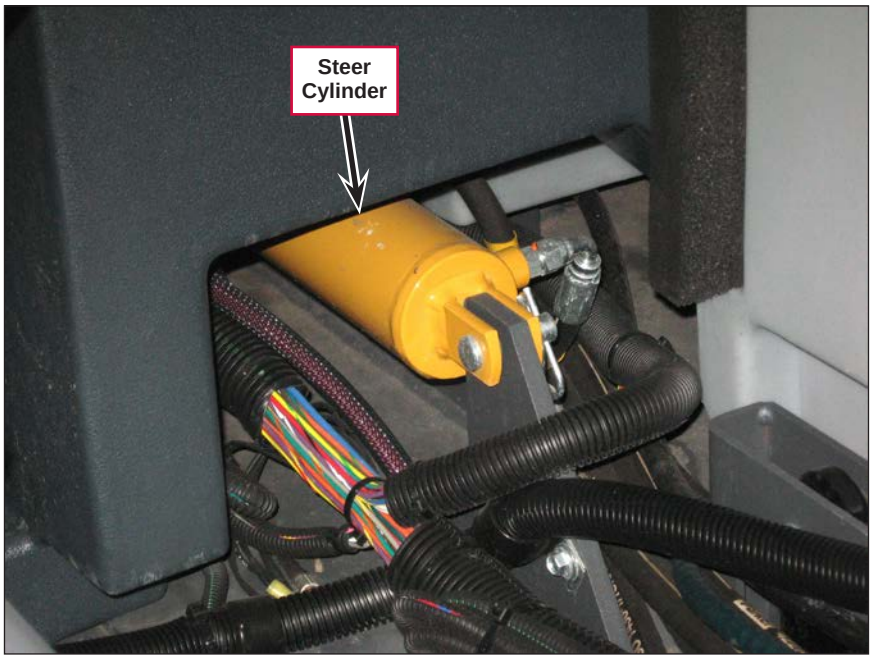

## Troubleshooting

| Problem | Cause | Correction |
|---|---|---|
| The steering “wanders”. | Backlash in the spur gear and rack | Adjust the rack so it’s closer to the spur gear. |
| The steering is hard or “jerky”. | Not enough oil to the steering system | Clean or replace the priority flow divider cartridge on the accessory/auxiliary pump. |

## Removal and Installation

***Warning!*** ***Before removing or reinstalling any machine components, make sure the key switch is off, the key is removed from the machine and the parking brake is engaged.***

***Note:*** *If the steer cylinder is removed, mark the teeth where the rack engages the spur gear so the rack and spur gear engage at the same location when the steer cylinder is reinstalled.*

## Specifications

| Component | Specifications |
|---|---|
| Steering | Front wheel, hydraulic cylinder and rotary valve controlled |
| Steering Unit | Maximum System Pressure – 2030 psi |
| | Maximum Back Pressure – 300 psi |
| | Maximum Flow – 5 GPM |
| | Displacement – 4.5 CIR |
| | Check Valve for Manual Steering – Yes |

# Sweep System, Side Broom

## Functional Description

### Overview

The side broom sweep system is available with either with a single left-hand side broom (with right side scrub brush), or with dual side brooms. Both configurations use DustGuard™ nozzles to spray solution in front of the broom(s) to minimize dust.

The side broom hydraulic motors are powered by the oil from the discharge side of the two main scrub brush motors. The side sweep/scrub solenoid valve S8 controls the oil flow to the side broom hydraulic motor(s).

The side broom(s) use an electric lift actuator to raise and lower the broom(s).

### Side Broom Sweep System Wiring Diagram

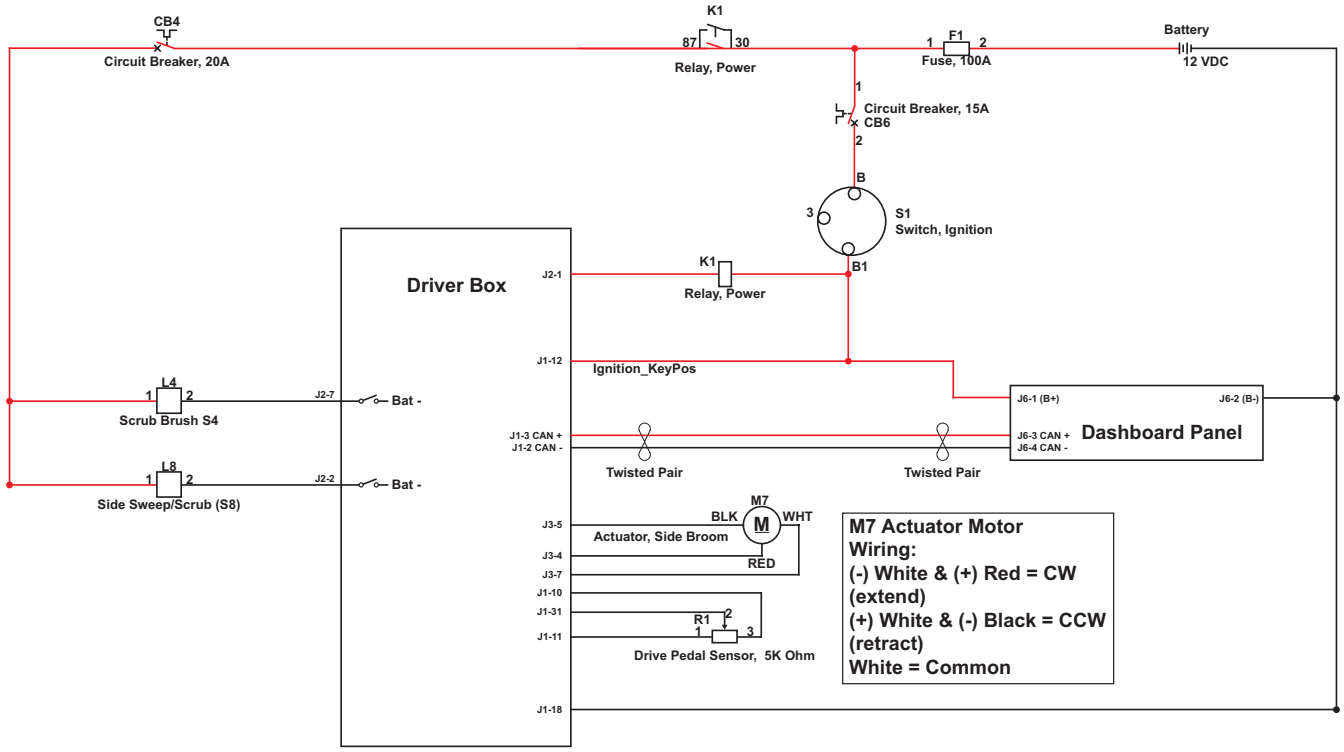


## Circuit Description

For the side broom system to work, the key switch must be on, the engine must be running and the **Driver Box** must receive a signal from the **Dashboard Panel** via the CAN Bus that the Operator has actuated the main scrub system, and has not disabled the side broom system.

### *Side Broom Motor(s)*

For the side broom motor(s) to run:

- The **Driver Box** must receive a signal from the **Drive Pedal Sensor R1** that the drive pedal has been moved from the neutral position.
- The main scrub brush motors must be running to supply oil to side broom motor(s).
- The **Driver Box** must provide a ground from pin **J2-2** to the **Side Sweep/Scrub** solenoid valve **S8** to open the valve and allow oil to flow to the side broom motor(s).

### *Side Broom Actuator*

For the side broom actuator to raise or lower the side broom(s), the **Driver Box** must provide voltage at the appropriate polarity from **J3-4** (**RED** extend) or **J3-5** (**BLK** retract). Pin **J3-7** (**WHT**) is the common.

## *Side Broom Sweep System Hydraulic Diagrams*

### *Side Broom Motor(s) Off*

When the two **Side Broom Motors**, or the **Right Side Scrub Motor** and left **Side Broom Motor** are off, the **Side Sweep/Scrub Valve L8** is closed (de-energized). The **Side Sweep/Scrub Valve L8** directs the oil from the **Cylindrical Scrub Brush Motors** to the oil **Cooler** and filter, bypassing the **Side Scrub/Broom Motors**.

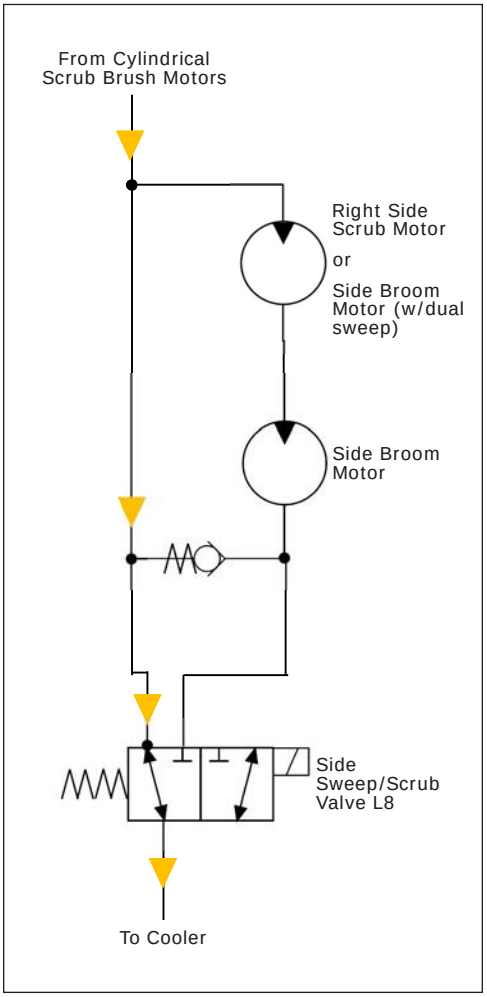

### *Side Broom Motor(s) On*

When the two **Side Broom Motors**, or the **Right Side Scrub Motor** and left **Side Broom Motor** are on, the **Side Sweep/Scrub Valve L8** is energized to direct the oil from the discharge side of the **Cylindrical Scrub Brush Motors** to the **Side Scrub/Broom Motors**. The oil then travels from the discharge side of the **Side Scrub/Broom Motors** to the oil **Cooler** and filter.

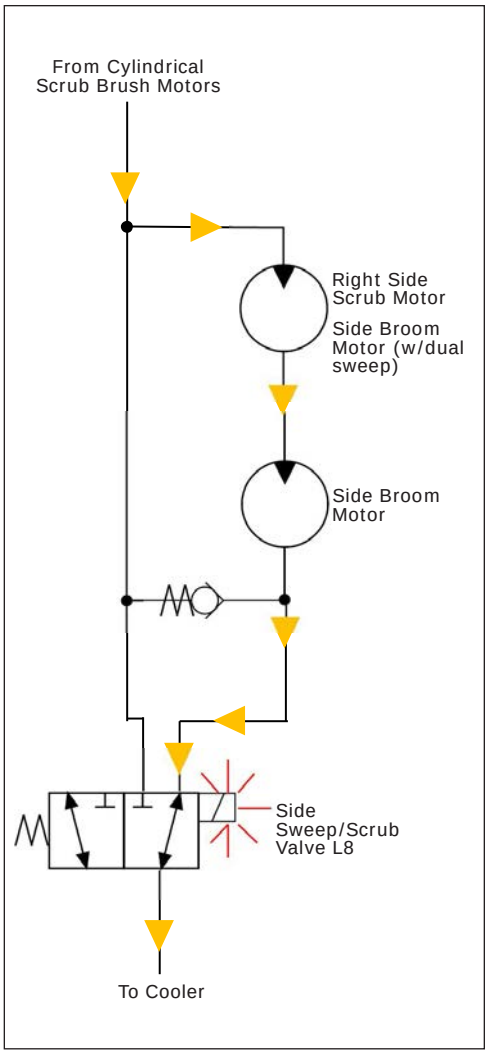

# Component Locations

## Single (left-hand) Sweep

The single (left-hand) sweep system is installed on the front of the machine in conjunction with a right-hand scrub system.

The **Side Broom Assembly** is mounted on the **Side Broom Lift Weldment**. The **Actuator Motor** extends and retracts the pivot arm on the **Side Broom Lift Weldment** to raise and lower the **Side Broom Assembly**.

The DustGuard™ **Mist Pump M5** supplies solution to the **Nozzle Assembly** to reduce the dust generated during sweeping.

The **Side Sweep/Scrub Valve L8** controls the hydraulic oil to the **Hydraulic Motor** on the **Side Broom Assembly** to switch the **Hydraulic Motor** on and off.

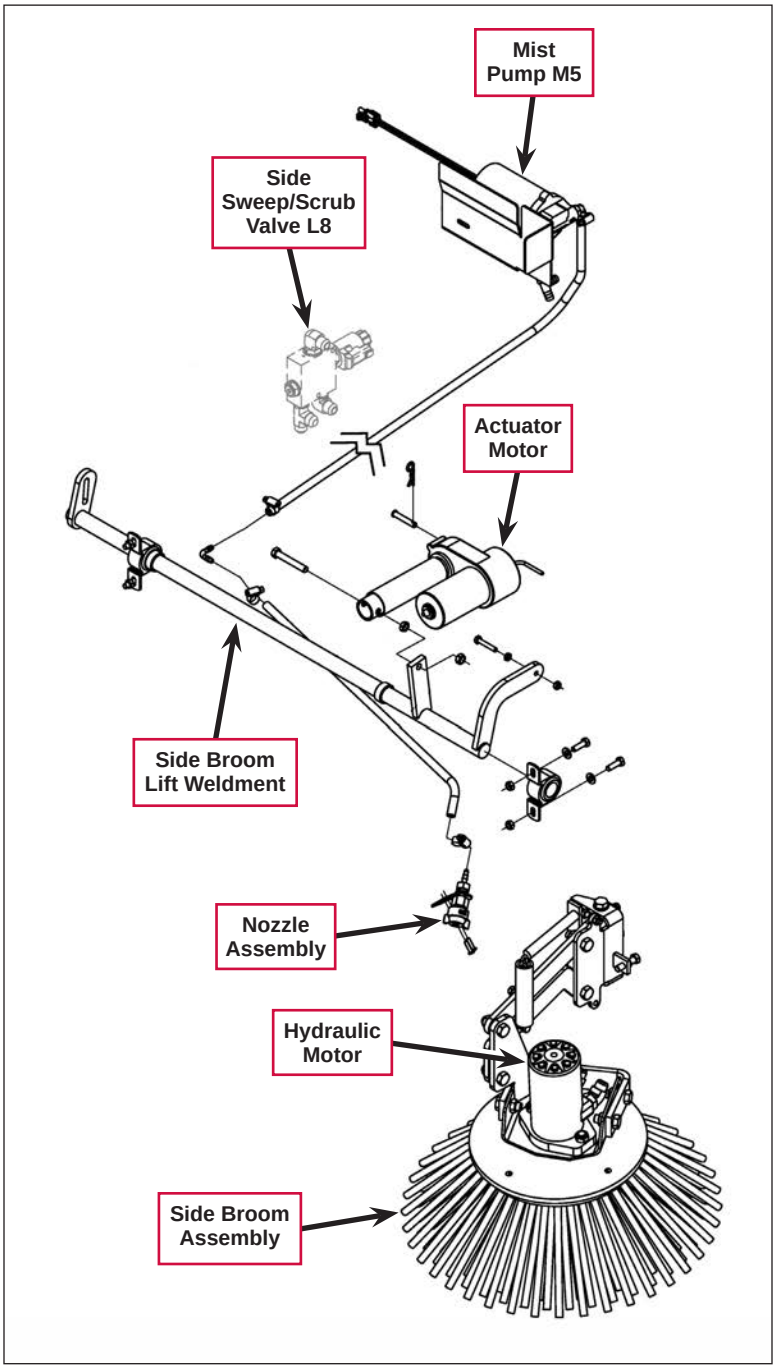

## *Dual Sweep*

The dual sweep system is installed on the front of the machine and uses two **Side Broom Assemblies** with no right side scrub motor.

The **Side Broom Assemblies** are mounted on the **Side Broom Lift Weldment**. The **Actuator Motor** extends and retracts the pivot arm on the **Side Broom Lift Weldment** to raise and lower the **Side Broom Assemblies**.

The DustGuard™ **Mist Pump M5** supplies solution to the two **Nozzle Assemblies**.

The **Side Sweep/Scrub Valve L8** controls the hydraulic oil to the **Hydraulic Motors** on the **Side Broom Assemblies** to switch the **Hydraulic Motors** on and off.

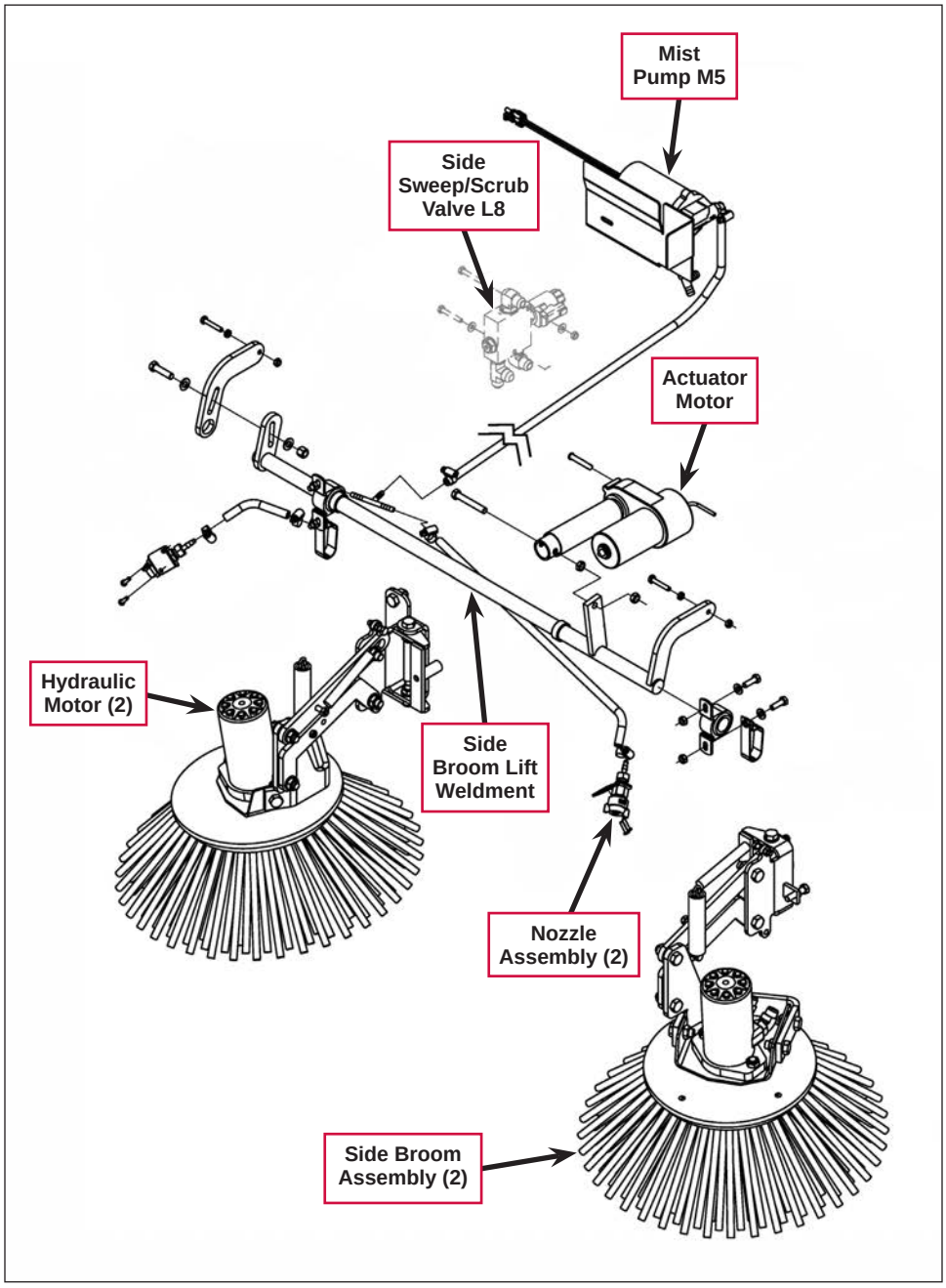

The **Right Side Scrub/Sweep Solenoid Valve S8/L8** controls the side sweep motor(s). **S8/L8** is located above the front end of the **Scrub Deck**.

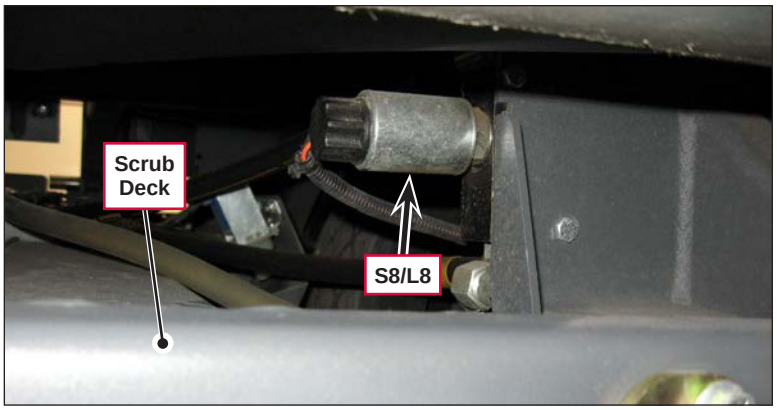


## Maintenance and Adjustments

***Warning! Before performing any machine maintenance or adjustments, make sure the key switch is off, the key is removed from the machine and the parking brake is engaged.***

### To Adjust the Side Broom Lift Actuator Motor

1. Assemble the jumper wire that you'll need to connect machine battery to the three-wire connector on the actuator. Refer to the adjacent **Jumper Wire Assembly Schematic** and **Bill of Material**.

***Important Service Note:***
*The power cord adapter (p/n 56407502), normally used on all other two-wire actuator motors, should not be used on the side broom lift actuator motor.*

The **Jumper Wire Assembly Schematic** illustrates the correct battery polarity (+ and -) power inputs to operate the actuator motor for both extending and retracting the drive nut.

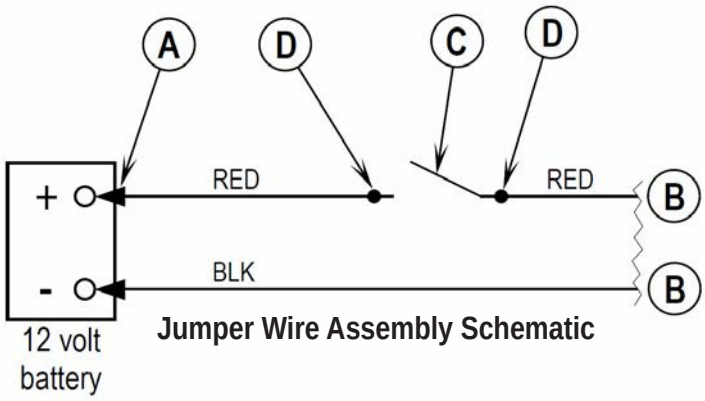


**Jumper Wire Assembly Schematic**

**Jumper Wire Assembly**
Bill of Material

| Item | Qty | Description |
|---|---|---|
| | 1 | Wire 16 gauge (red) 60" length |
| | 1 | Wire 16 gauge (black) 60" length |
| A | 2 | Medium size insulated alligator clips (60 series) |
| B | 2 | Small size insulated alligator clips (30 series) |
| C | 1 | Normally Open snap switch part # 56385615 |
| D | 2 | .250 (1/4) insulated female connectors part # 56244138 |

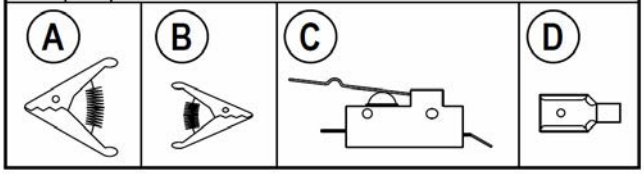

2. Connect the jumper wiring as shown to run the actuator motor in the **Retract (IN)** mode.
3. Hold the steel **Drive Nut Tube** and press the switch to run the **Drive Nut Tube** toward the motor housing (its **IN** limit).
4. Measure the position of the **Drive Nut Tube** on the actuator shaft, then compare it to the retracted (**IN**) dimension specification as shown.
5. Manually turn the steel **Drive Nut Tube** to match the **IN** dimension shown.
6. Connect the jumper wiring to run the actuator motor in the **Extend (OUT)** mode.
7. Hold the **Drive Nut Tube** and press the switch to run the **Drive Nut Tube** to the **OUT** position. Wait for the motor to stop once it reaches its **OUT** limit.
8. Measure the position of the **Drive Nut Tube** on the actuator shaft and compare the measurement with the **OUT** dimension shown.
9. If the **OUT** measurement doesn't match the dimension shown, it will be necessary to remove the rubber **Adjuster Cover** and rotate the outside hex adjuster underneath the **Adjuster Cover**.

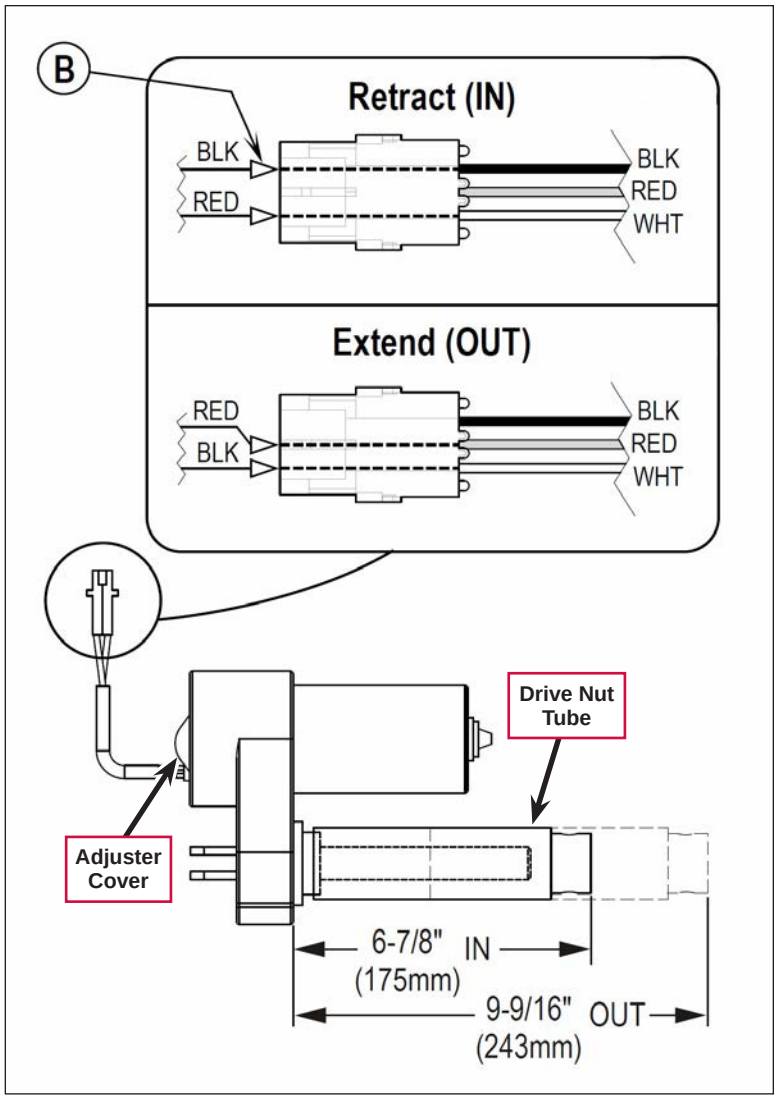


***Note:*** *Use a 1/2" (13mm) socket to turn the outside hex adjuster. Each click of the adjuster (cam) will change the* ***Drive Nut Tube*** *travel 1/16" (1.6mm).*

- To increase the **Drive Nut Tube OUT** dimension, turn the adjuster clockwise.
- To decrease the **Drive Nut Tube OUT** dimension, turn the adjuster counterclockwise.

10. Hold the **Drive Nut Tube**, run the actuator to the **IN** and **OUT** positions and check both dimensions after each adjustment.

***Note:*** *When checking the directional travel dimensions, remember to change the connections (battery polarity) of the jumper wires.*

11. Once the **Drive Nut Tube** travel limits are set correctly, reinstall the **Adjuster Cover**.

***Service Tip:*** *Leave the correctly-adjusted actuator motor in the out (extended) position when you reinstall the motor.*

# Troubleshooting

## General Troubleshooting

| Problem | Cause | Correction |
|---|---|---|
| Side Sweep System not working | Right side scrub/sweep motor solenoid valve over current (fault code 16 displayed) | • Check L8 solenoid coil wiring for problems (+ ORN and - BLK/WHT).<br>• Check coil resistance. If less than 6 ohms, replace. Also see the ***Main Scrub and Side Sweep/Scrub On*** electrical ladder detail. |
| | Side sweep lift actuator over current (fault code 30 displayed) | • Three wires supply power to the M7 side broom lift actuator motor; check wiring for problems. Wire colors J3-4 BLU/RED (+) DN otherwise open, J3-5 WHT/RED (-) UP otherwise open, J3-7 GRA/VIO common wire + UP and - DN.<br>• Test current draw full load 20A ±2A max.<br>• Check for frozen or binding lift linkage. Repair/ replace as needed. |

## *Main Scrub and Side Sweep/Scrub On*

The following conditions must be met for the Side Sweep Broom motor(s) to run:

- The **Key Switch** must be on.
- The engine must be running.
- The scrub on mode and side broom/scrub must be selected on the **Dashboard Panel**.
- The drive pedal must be activated (moved from the neutral position).

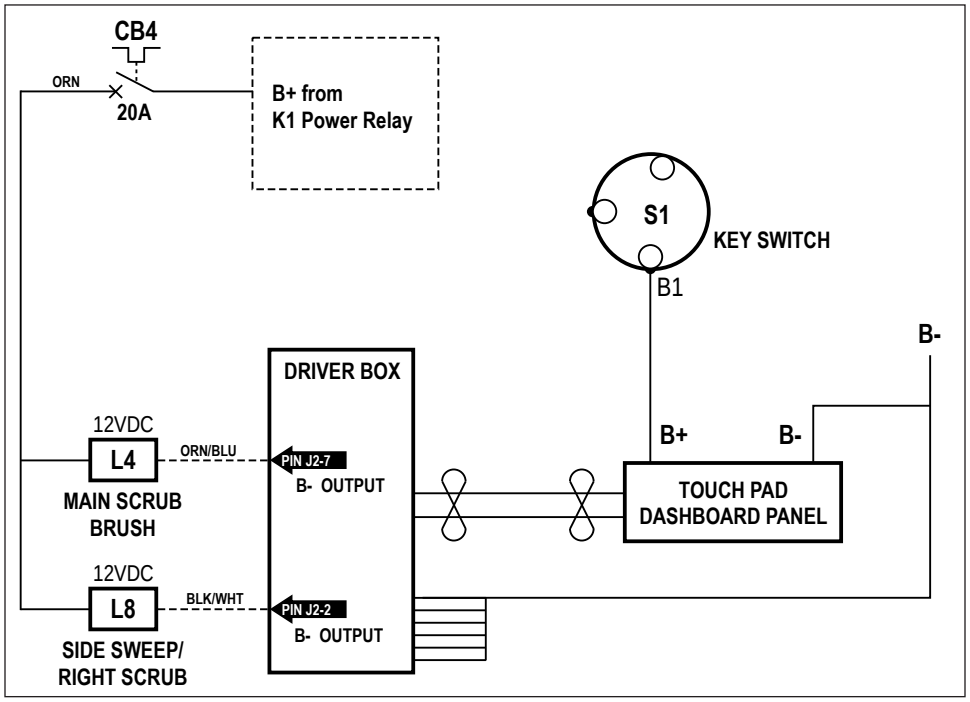


| Component | Current - Amps | Coil Resistance - Ohms |
|---|---|---|
| L4 | 1.5 Amps | 8 ohms |
| L8 | 1.5 Amps | 8 ohms |

## *Specifications*

| Component | Specifications |
|---|---|
| Scrub Brush Solenoid Valve L4 | Current – 1.5 amps |
| | Nominal Coil Resistance – 8 ohms |
| Side Sweep/Scrub Solenoid Valve L8 | Current – 1.5 amps |
| | Nominal Coil Resistance – 8 ohms |
| Side Broom Motor | Displacement – 17.9 Cu. In. Per Revolution |
| | Rotation - Clockwise (as viewed from shaft end) |
| | Pressure Port - A |

# Wheel System, Non-traction

## Functional Description

The non-traction wheel system supports the rear of the machine and includes the braking system.

The **Rear Wheel Assemblies** are fastened to the **Finished Spindles** with a single **3/8”-16 x .75” Hex Screw** and flat washer.

The **Brake Assemblies** are fastened to the **Finished Spindles** with four **3/8”-16 x .75” Hex Screws**.

The **Finished Spindles** are fastened to the machine frame with four **1/2”-13 x 1.25” Hex Screws**.

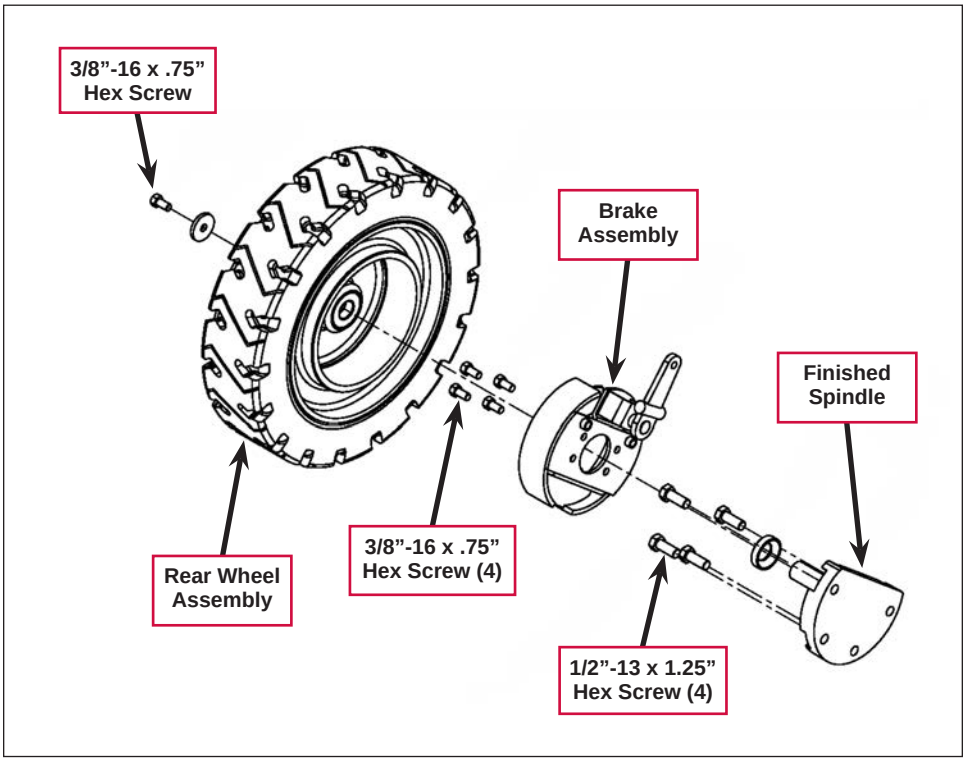


The **Brake Cable Assembly** connects the **Brake Pedal Assembly** to the **Brake Bar Weldment**. The **Brake Bar Weldment** actuates the brake levers on the **Brake Assemblies**.

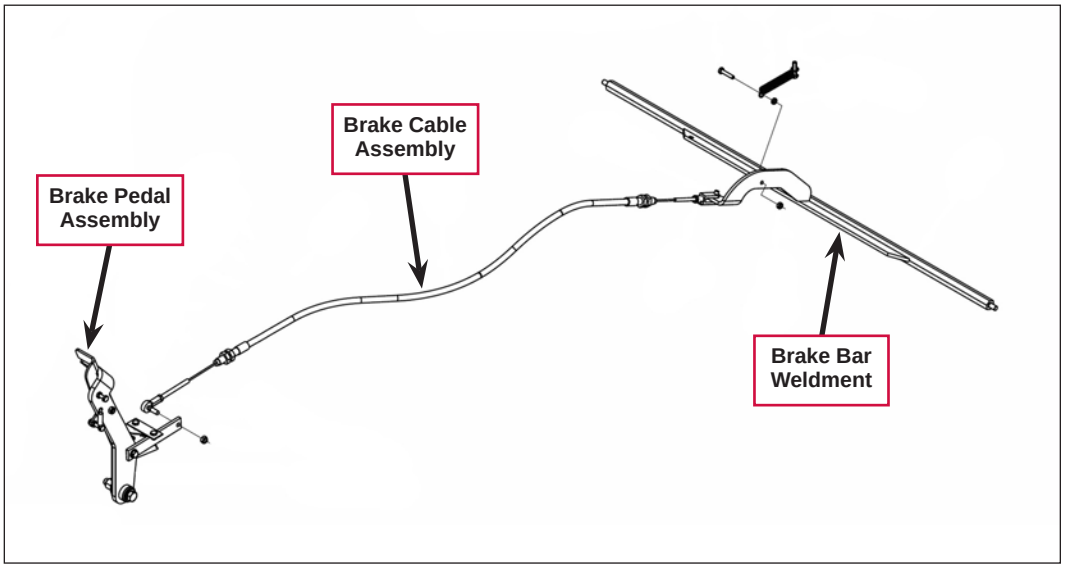

# Maintenance and Adjustments

***Warning!*** ***Before performing any machine maintenance or adjustments, make sure the key switch is off and the key is removed from the machine.***

## Brake Tension Adjustment

1. Remove the floor weldment, located in the Operator's compartment, to access the **Rod End**.
2. Remove the **Nyloc® Nut** and remove the **Rod End** from the brake pedal assembly.
3. Loosen the **Jam Nut** and rotate the **Rod End** in the appropriate direction to adjust the brake tension.
4. When the brake tension has been adjusted, tighten the **Jam Nut**.
5. Reinstall the **Rod End** into the brake pedal assembly, then reinstall and tighten the **Nyloc® Nut**.
6. Check the brake tension as follows:
   a. Jack up the rear of the machine to get the rear wheels off of the ground.

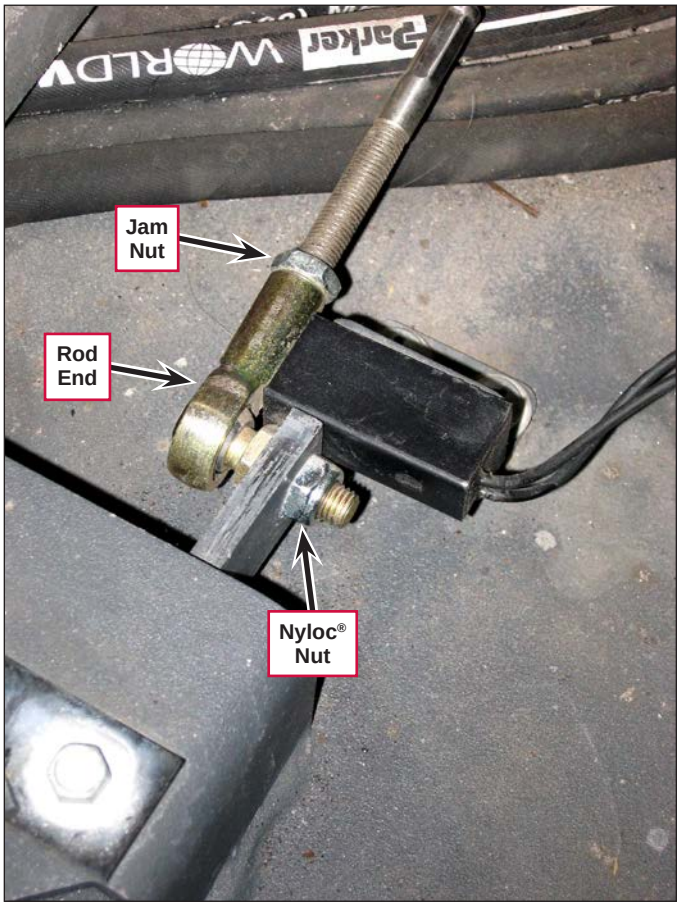


***Caution!*** ***Make sure to follow the instructions in the General Information/Jacking The Machine section. Jack the machine at the designated locations only.***

   b. Manually rotate the rear wheels to check the brake tension. The tension is set correctly when the wheels cannot be rotated with the parking brake applied to three "clicks", but will rotate freely when the parking brake is off.
   c. Readjust the brake tension as necessary following steps 2 through 5 above.
7. When the brake tension is adjusted correctly, lower the machine and reinstall the floor weldment.

## *Troubleshooting*

| Problem | Cause | Correction |
|---|---|---|
| The wheels are making excess noise. | The wheel bearings are worn. | Check the wheel assembly, wheel bearings and spindle and replace as required. |
| | The wheel and/or spindle is damaged. | |
| The brakes are not working correctly. | The brakes are out of adjustment. | Adjust the brake tension. |
| | The brake linings are worn out. | Replace the brake linings. |

## *Specifications*

| Component | Specifications |
|---|---|
| Brakes (service) | Mechanical drum brakes, one on each rear wheel, cable actuated |
| Tire (rear 2) load bearing | Size 16 in x 4 in [406 mm x 101 mm] solid |

# Wheel System, Traction

## Functional Description

### Overview

The traction wheel system includes the hydraulic traction drive motor and drive wheel, and the foot pedal/ hydroback system.

The traction drive motor is driven by the variable-displacement **Piston Pump** which allows speed and directional control. The **Piston Pump** and traction drive motor hydraulic system is a closed system, but allows for programmed oil leakage through the **Piston Pump** for lubrication and cooling purposes. This leaked oil returns to the reservoir and requires make-up oil that is supplied to the **Piston Pump** through the charge circuit.

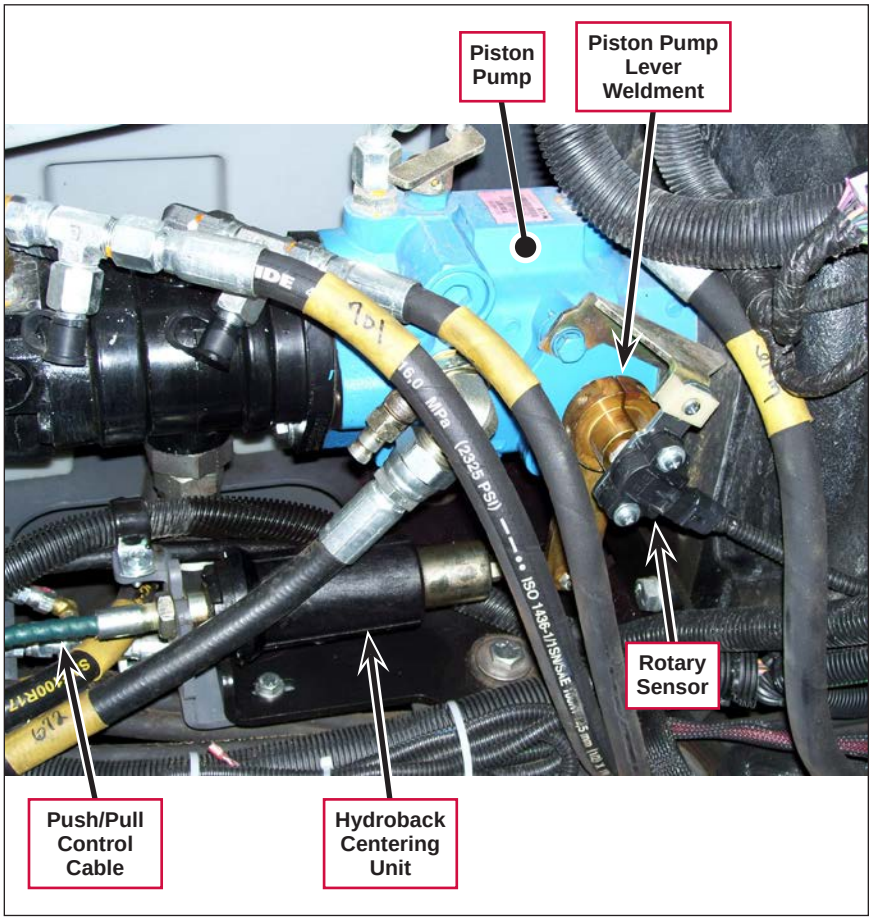


### Piston Pump

The **Piston Pump** is driven by the engine and powers the hydraulic traction drive motor.

### Foot Pedal, Hydroback and Rotary Sensor

The foot pedal actuates the **Push/Pull Control Cable** which is connected to the **Hydroback Centering Unit**.

The **Hydroback Centering Unit** transfers the **Push/Pull Control Cable** motion to the **Piston Pump Lever Weldment** attached to the **Piston Pump** to control machine direction and speed. The **Hydroback Centering Unit** also returns the foot pedal and **Piston Pump Lever Weldment** to the neutral position when the foot pedal is released.

The **Rotary** (Drive Pedal) **Sensor** is a 0 to 5K ohm potentiometer that rotates with the **Piston Pump Lever Weldment**. The resistance through the **Rotary Sensor** will vary with the position of the **Piston Pump Lever Weldment**. The Driver Box monitors the voltage through **Rotary Sensor** to ensure that the foot pedal is in neutral before the engine can be started, and to actuate the scrub/sweep functions when the foot pedal is moved from the neutral position.

## Traction Drive Motor

The **Traction Drive Motor** is an 18.3 CIR hydraulic motor and drives the **Front Wheel**.

A tow valve, when actuated, bypasses the hydraulic circuit from the piston pump to the **Traction Drive Motor** to allow the **Front Wheel** to rotate freely when towing or pushing the machine.

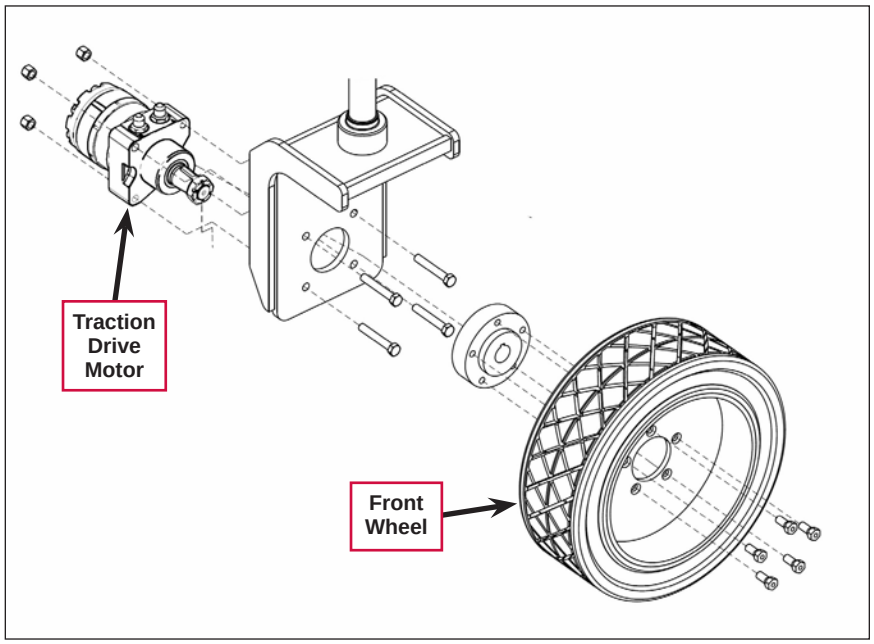


## Electrical Schematic

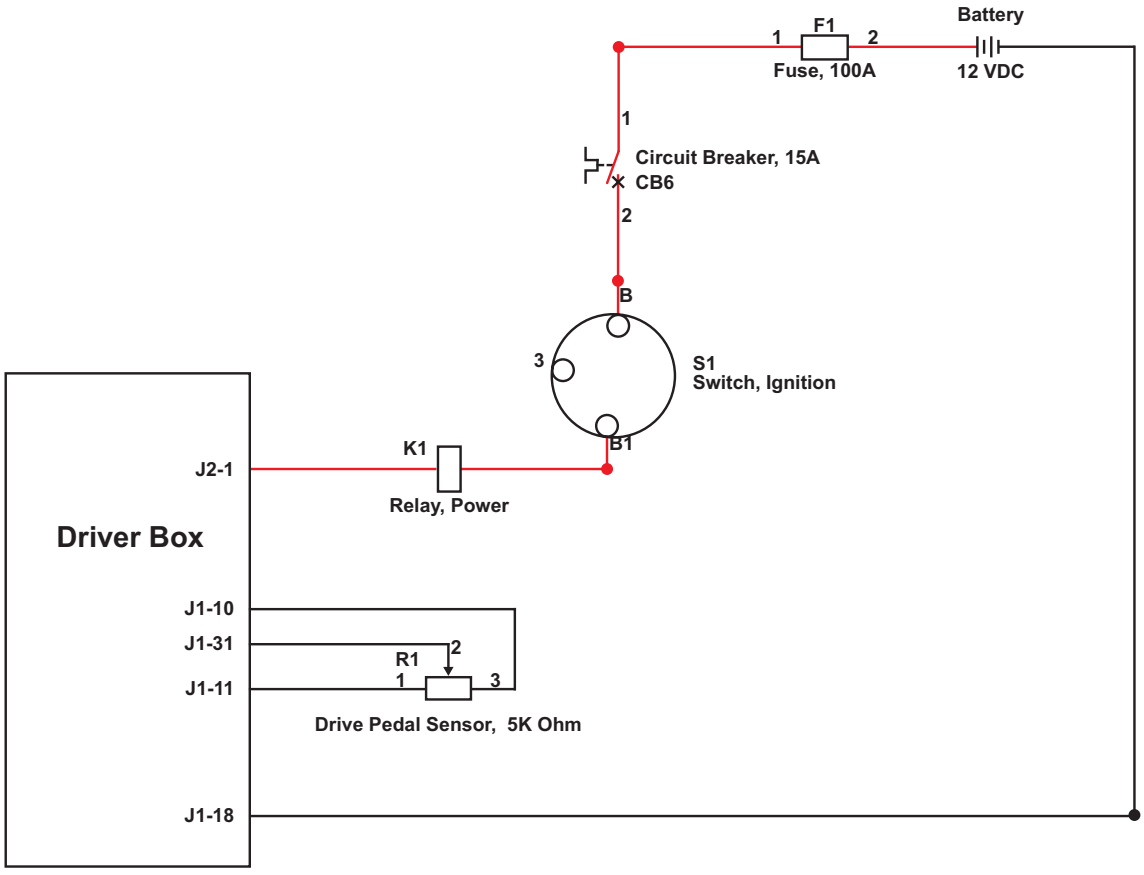

## Electrical Circuit Description

For the engine to start, the **Driver Box** must read a voltage through (rotary) **Drive Pedal Sensor** that's within the deadband range, indicating that the foot pedal is in the neutral position.

Once the engine is running, the **Driver Box** must read a voltage through **Drive Pedal Sensor** indicating that the foot pedal has moved from the neutral position in order to actuate the scrub/sweep functions.

## Hydraulic Diagrams

### Traction Drive Motor in Neutral

When the foot pedal is in the neutral position with the engine running, the **Piston Pump** is not sending any oil to the **Traction Drive Motor**.

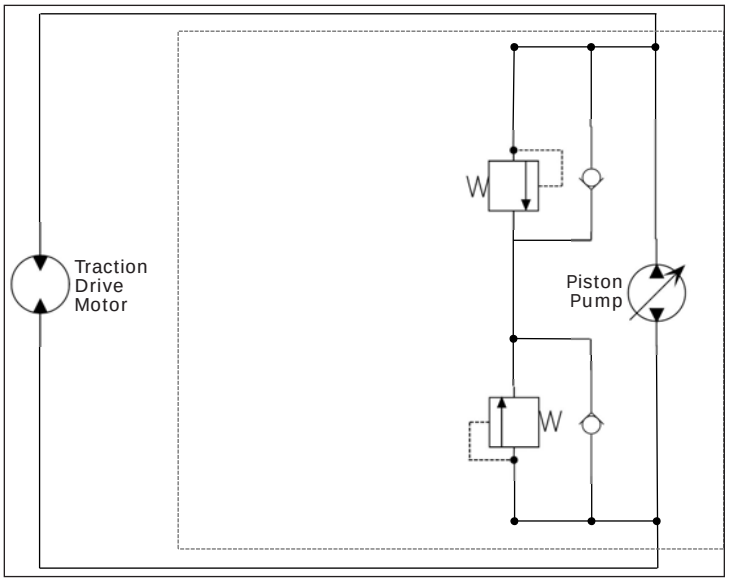


### Tow Valve Engaged

When the engine is off, the **Traction Drive Motor** acts like a hydraulic pump and makes it difficult to rotate the front wheel. The machine is equipped with a **Tow Valve** to eliminate this problem when towing or pushing the machine. When the **Tow Valve** is engaged, the oil is free to flow to and from the **Traction Drive Motor** through the **Tow Valve** when the front wheel is rotated, bypassing the **Piston Pump**.

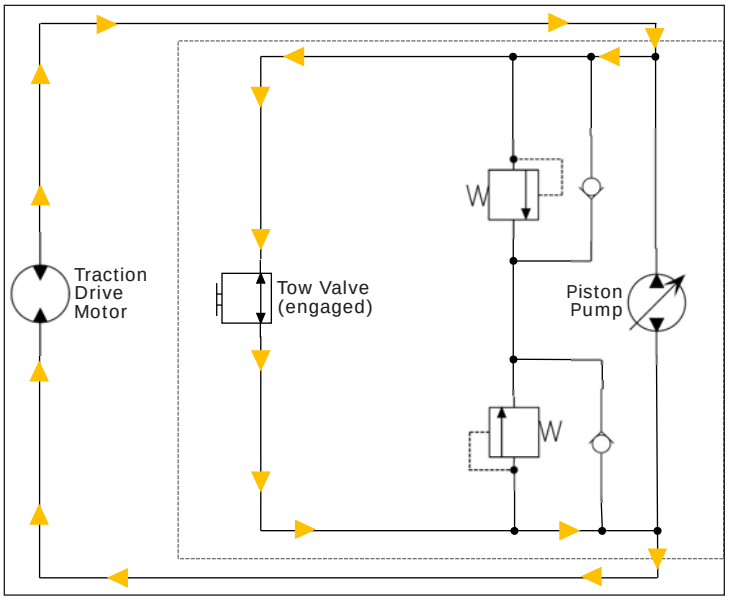

### *Traction Drive Motor in Forward or Reverse*

When the engine is running and the machine is moving either forward or in reverse, the **Piston Pump** is sending oil to the **Traction Drive Motor** to drive the front wheel in the appropriate direction.

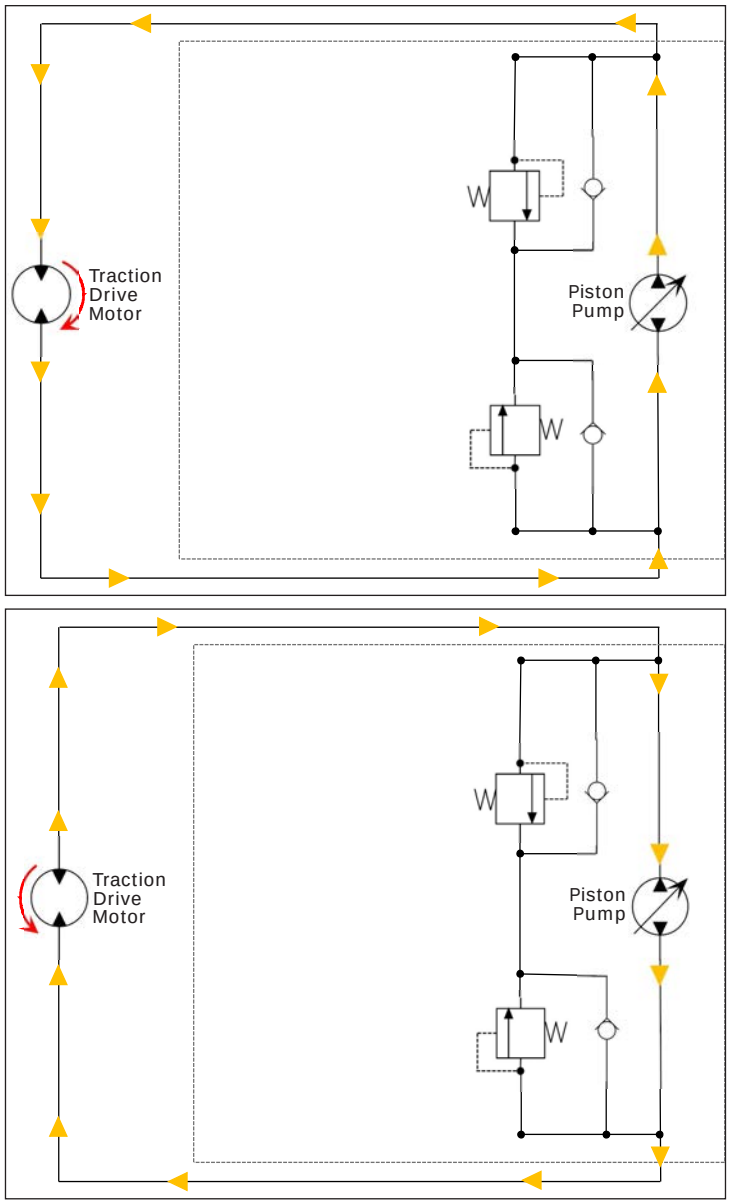


### *Traction Motor Stalling Out*

If the **Traction Drive Motor** is unable to run in the forward direction for any reason (front wheel stalled, etc.), the **Forward Relief Valve** will open to allow oil to flow from and to the **Piston Pump**, bypassing the **Traction Drive Motor** to prevent damage to the hydraulic components.

If the **Traction Drive Motor** is unable to run in reverse, the **Reverse Relief Valve** will open to bypass the **Traction Drive Motor**.

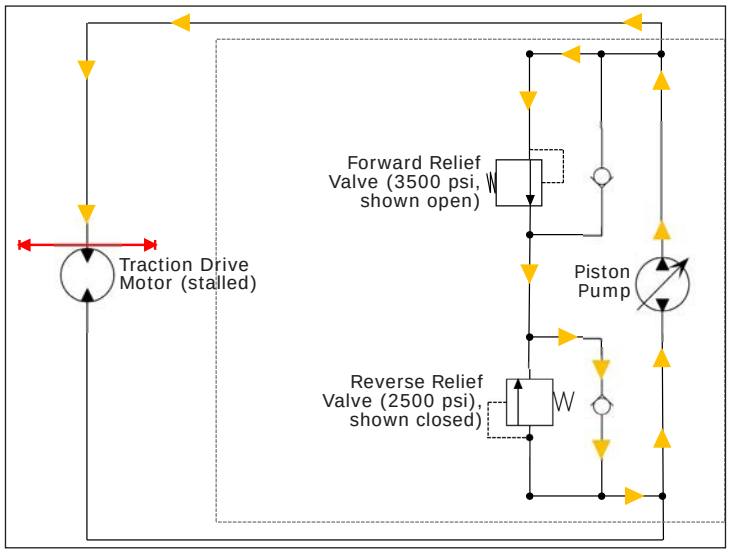

# Component Locations

## Piston Pump, Hydroback and Rotary Sensor

The **Piston Pump** is the blue pump mounted directly in front of the engine.

The **Hydroback Centering Unit** is mounted on the left side of the **Piston Pump**.

The **Rotary Sensor** (called the **Drive Pedal Sensor** on the electrical ladder diagram) is fastened to the piston pump lever weldment.

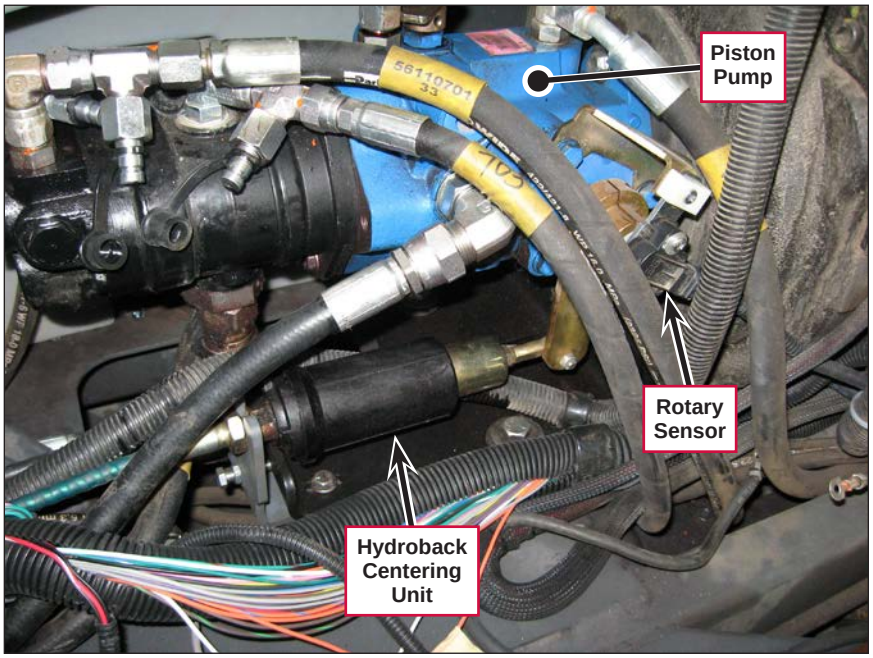


## Traction Drive Motor

The **Traction Drive Motor** is mounted to the drive wheel weldment underneath the front of the machine.

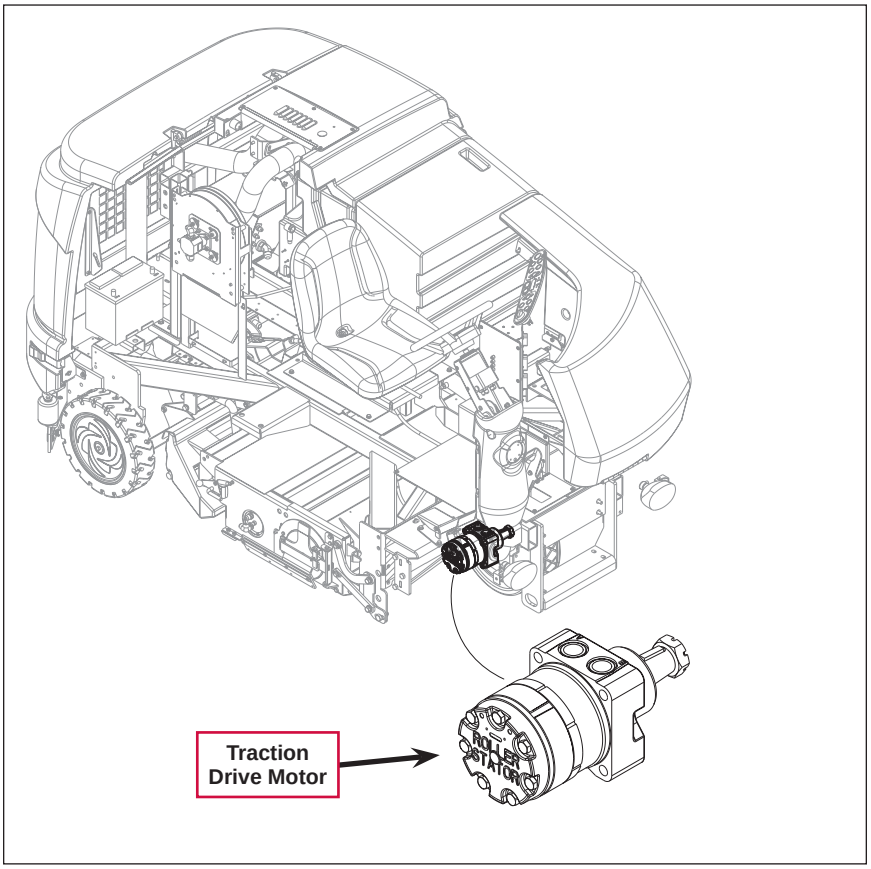

# Maintenance and Adjustments

***Warning!*** ***Before performing any machine maintenance or adjustments, make sure the key switch is off, the key is removed from the machine and the parking brake is engaged.***

## Foot Pedal/Hydroback Neutral Adjustment

***Note:*** *When servicing the hydrostatic drive system, always check for any machine creeping (movement) when the machine is in neutral with the engine running. The machine must not move either forward or reverse after the foot pedal is released. If machine creeps in neutral, or if you replace the* ***Hydroback Centering Unit****, pedal cable or* ***Rotary Sensor****, you will need to set the hydrostatic drive neutral position, then recalibrate the neutral deadband setting.*

1. Empty and remove the recovery tank to access the **Hydroback Adjuster Plate**.

***Caution!*** ***Make sure to follow the instructions in the General Information/Jacking the Machine section. Jack the machine at the designated locations only.***

2. Block the rear wheels.
3. Jack up the front of the machine until the front drive wheel is off the floor.
4. Place supports at the front corners of the machine.
5. Start the engine and observe the direction of the drive wheel rotation.
6. Loosen the two **5/16”-18 Hex Head Screws** holding the **Hydroback Adjuster Plate** to the chassis.

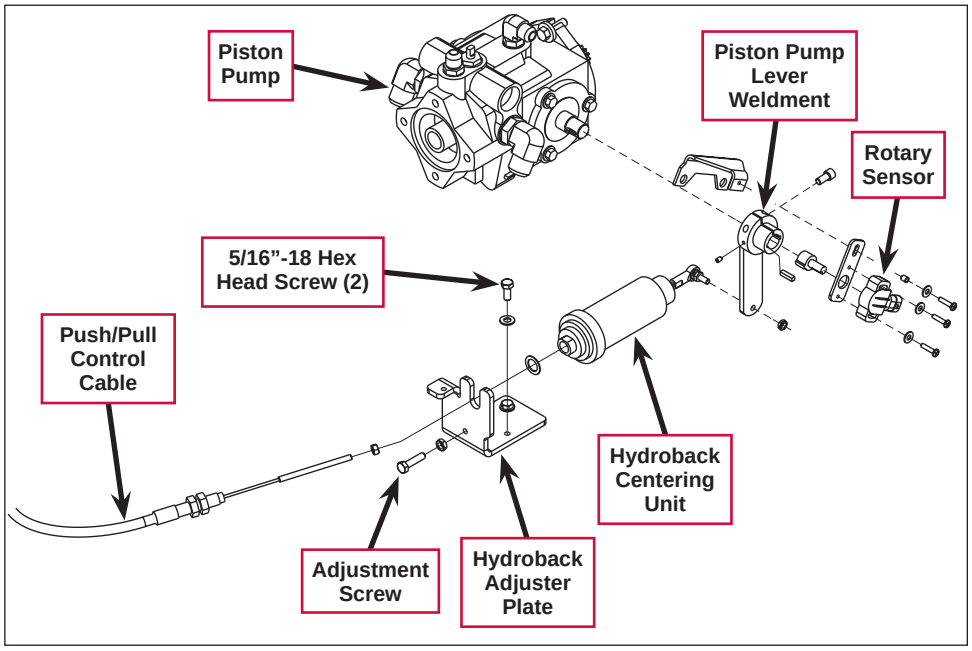


7. Loosen the jam nut and turn the **Adjustment Screw** clockwise or counterclockwise to move the **Hydroback Adjuster Plate** and **Hydroback Centering Unit** as required to stop any wheel movement. The **Piston Pump Lever Weldment** on the **Piston Pump** is now in the neutral position.
8. Tighten the two **5/16”-18 Hex Head Screws** to secure the **Hydroback Adjuster Plate** to the chassis.
9. Tighten the jam nut on the **Adjustment Screw**.
10. Test the neutral adjustment by activating the foot pedal in both forward and reverse, then letting the foot pedal return to the neutral position.
11. Readjust the **Hydroback Adjuster Plate** neutral position if the neutral setting is not repeatable. If you can’t get a repeatable neutral position, replace the **Hydroback Centering Unit** and/or **Push/Pull Control Cable** as necessary.

12. Check the maximum forward and reverse wheel speeds and adjust the pedal stops as necessary. Refer to the ***Specifications/Propulsion Pump Circuits*** table in the ***Hydraulic System*** section for nominal wheel speeds.

13. Turn the engine off, then see if it will restart. If engine will not start, the **Rotary Sensor** is probably out of its neutral (deadband) range and needs to be recalibrated. See the ***Foot Pedal Neutral/Deadband Adjustment*** section for programming instructions.

14. Lower the machine and reinstall the recovery tank.

## *Foot Pedal Neutral Deadband Adjustment*

The resistance through the Rotary Sensor (rotary potentiometer) attached to the hydrostatic Piston Pump linkage will vary with the position of the linkage. The Driver Box must see the resistance through the Rotary Sensor within a particular range, called the neutral "deadband", to confirm the Piston Pump is in neutral before the Driver Box will allow the engine to start.

Once the engine is started, depressing the foot pedal moves the Rotary Sensor out of the deadband range. When the Driver Box sees the resistance from the Rotary Sensor out of the deadband range, it activates the various scrub/sweep functions.

Whenever you change or repair the foot pedal linkage components or the hydrostatic unit, or if you replace the Rotary Sensor or Control Board (Driver Box), you will have to recalibrate the neutral deadband position and set the sensitivity as follows:

1. Depress the foot pedal to the full reverse position, then allow the pedal to slowly return to its neutral position. Do not move the pedal during the remainder of this procedure.

2. Press and hold the Engine Speed switch, then turn the ignition Key Switch to the run (on) position. Continue to hold the Engine Speed switch until all the display panel lights turn off (approximately three seconds), then release the switch.



   - The first line of the LCD will read **PEDAL CALIBRATION**.
   - The second line of the display will read **Place Pedal in Neutral** with an arrow to the left of the line.
   - The third line of the display will read **Neutral Deadband**.

3. Press the green Scrub On switch.



   - The first line of the LCD will read **Neutral Set**.
   - The second line of the display will show the resistance value, in ohms, that the control board is reading through the rotary sensor. Note that it's normal for this value to drift a little.

4. Press the green Scrub On switch to set the nominal deadband resistance value. The display will return to the previous menu.

5. Press the Side Broom Down (**-**) switch to move the arrow to the left of the **Neutral Deadband** line.



6. Press the green Scrub On switch to display the **Neutral Deadband** range menu. The percentages shown are the limits the resistance from the rotary sensor can vary from the **Neutral Set** (nominal) resistance and still be in the deadband range and allow the engine to start.

7. Press the Side Broom Up (**+**) and Down (**-**) switches to scroll through the available percentages.



***Note:*** *The ideal neutral deadband percentage range is one that allows reliable starting, yet still actuates the scrub functions with minimal pedal travel.*

- *Increasing the percentage range will decrease the pedal neutral position sensitivity, but will increase the pedal travel required to start the scrub functions.*
- *Decreasing the percentage range will increase the pedal neutral position sensitivity, but will decrease the pedal travel required to start the scrub functions.*

*The factory default value is 3%.*

8. When the arrow is to the left of the desired percentage value:
   - Press the green Scrub On switch to save the new percentage value. The display will return to the previous menu.



   - Press the red Scrub Off switch to return to the previous menu without changing the percentage value.



9. Turn the Key Switch to the off position. The new settings will be saved and remain in effect until they are changed again.

## Troubleshooting

| Problem | Cause | Correction |
|---|---|---|
| The machine “creeps” forward or backward when the foot pedal is in the neutral position. | The Hydroback neutral position is out of adjustment. | Reset the Hydroback neutral position. Refer to the ***Foot Pedal/Hydroback Neutral Adjustment*** section. |
| The starter will not crank the engine. | The Driver Box is failing to see the Rotary Sensor resistance in the deadband and has sent a “start-inhibit” signal to the relay PCB. | Note that in this condition, moving the drive pedal out of the neutral position should allow the starter to crank the engine.<br><br>Recalibrate the neutral deadband position and set the sensitivity. Refer to the ***Foot Pedal Neutral Deadband Adjustment*** section. |

# Removal and Installation

***Warning!*** ***Before removing or reinstalling any machine components, make sure the key switch is off, the key is removed from the machine and the parking brake is engaged.***

## Push/Pull Control Cable Replacement

1. Lower the side broom(s).
2. Empty and remove the recovery tank.

***Caution!*** ***Make sure to follow the instructions in the General Information/Jacking the Machine section. Jack the machine at the designated locations only.***

3. Block the rear wheels.
4. Jack up the front of the machine. This will make it easier to access the **Push/Pull Control Cable** and mounting hardware by the foot pedal assembly.
5. From underneath the machine, note the position and spacing of the two jam nuts and star washer holding the old **Push/Pull Control Cable** in the mounting fork by the foot pedal. Loosen the jam nuts and remove the **Push/Pull Control Cable** from the mounting fork.

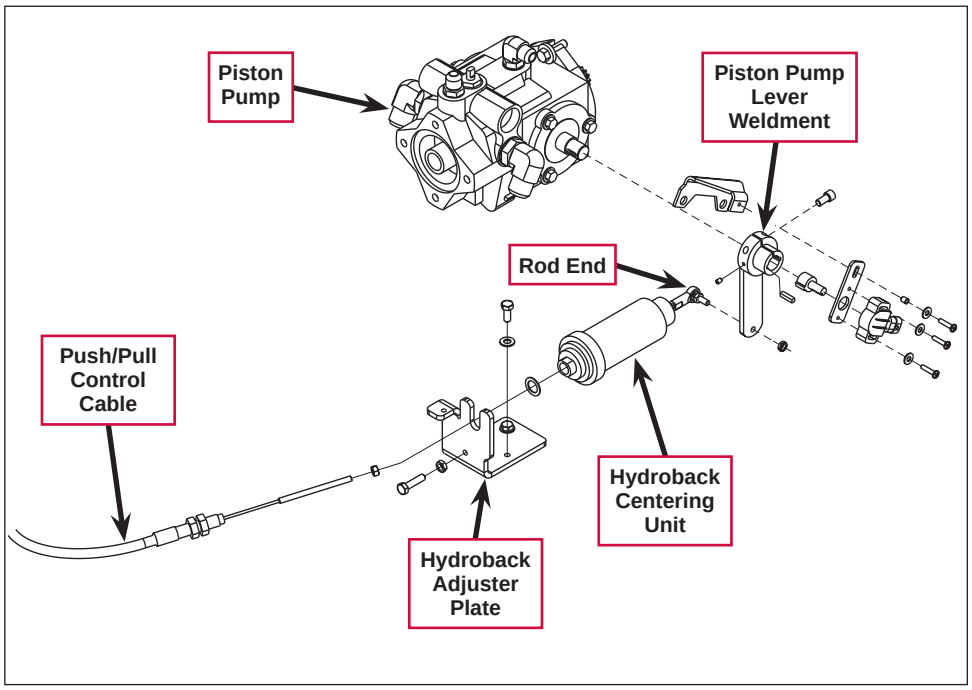


6. Disconnect the rod end on the old **Push/Pull Control Cable** from the foot pedal assembly.
7. Loosen the locknut, then remove the rod end and locknut from the **Push/Pull Control Cable**.
8. Remove the two jam nuts and star washer from the old **Push/Pull Control Cable**. (This will make it easier to remove the old **Cable** from the machine.)
9. Loosen the jam nut holding the old **Push/Pull Control Cable** and **Hydroback Centering Unit** in the mounting fork by the **Piston Pump**.
10. Disconnect the **Rod End** from the **Piston Pump Lever Weldment**.
11. Loosen the locknut, then remove the **Rod End** and locknut from the old **Push/Pull Control Cable**.
12. Remove the four jam nuts and two star washers from the new **Push/Pull Control Cable**. (This will make it easier to pull the new **Cable** through the machine.)



***Service Note:*** *To thread the new* ***Push/Pull Control Cable*** *from the foot pedal assembly to the Hydroback, we recommend that you SECURELY attach the new* ***Cable*** *to the old* ***Cable****, then carefully pull the new* ***Cable*** *through the old* ***Cable*** *routing path in the machine. This will eliminate a lot of disassembly and reassembly work.*

13. Once the new **Push/Pull Control Cable** has been threaded through the machine, disconnect it from the old **Cable**.

14. Reinstall the two jam nuts and star washer onto the pedal end of the **Push/Pull Control Cable**. Position the jam nuts and star washer in the same location as noted in step 5 above.

15. Remove the red plastic thread protector sleeve from the new **Push/Pull Control Cable**, then install the locknut and rod end onto the new **Cable**.

16. Reinstall the rod end into the foot pedal assembly.

17. Position the new **Push/Pull Control Cable** into the mounting fork by the foot pedal. Make sure the star washer is located on the rear side of the mounting fork, then tighten the two jam nuts.

18. Reinstall one jam nut and a star washer onto the Hydroback end of the new **Push/Pull Control Cable**. (Only one jam nut is needed to fasten the **Cable** and **Hydroback Centering Unit** to the **Hydroback Adjuster Plate**.)

19. Remove the red plastic thread protector sleeve from the new **Push/Pull Control Cable**, then install the **Cable** into the **Hydroback Centering Unit**. Note that the smaller end of the **Cable** will thread through the rear of the **Hydroback Centering Unit**, and the larger threads on the outside of the **Cable** will thread directly into the front of the **Hydroback Centering Unit**.

20. Install the locknut and **Rod End** onto the new **Push/Pull Control Cable**.

21. Reinstall the **Rod End** into the **Piston Pump Lever Weldment**.

22. Position the **Push/Pull Control Cable** and attached **Hydroback Centering Unit** into the **Hydroback Adjuster Plate** by the **Piston Pump**. Make sure the star washer is located on the rear side of the **Hydroback Adjuster Plate** and contacts the front of the **Hydroback Centering Unit**, then tighten the jam nut.

23. After installing a new **Push/Pull Control Cable**, set the foot pedal/Hydroback neutral position according to the instructions in the ***Foot Pedal/ Hydroback Neutral Adjustment*** section.

## *Hydroback Replacement*

1. Empty and remove the recovery tank.

2. Loosen the jam nut holding the **Push/ Pull Control Cable** and **Hydroback Centering Unit** in the **Hydroback Adjuster Plate** by the **Piston Pump**.

3. Disconnect the **Rod End** from the **Piston Pump Lever Weldment**.

4. Loosen the locknut and remove the **Rod End** and locknut from the **Push/Pull Control Cable**.

5. Remove (unscrew) the old **Hydroback Centering Unit** from the **Push/Pull Control Cable**.

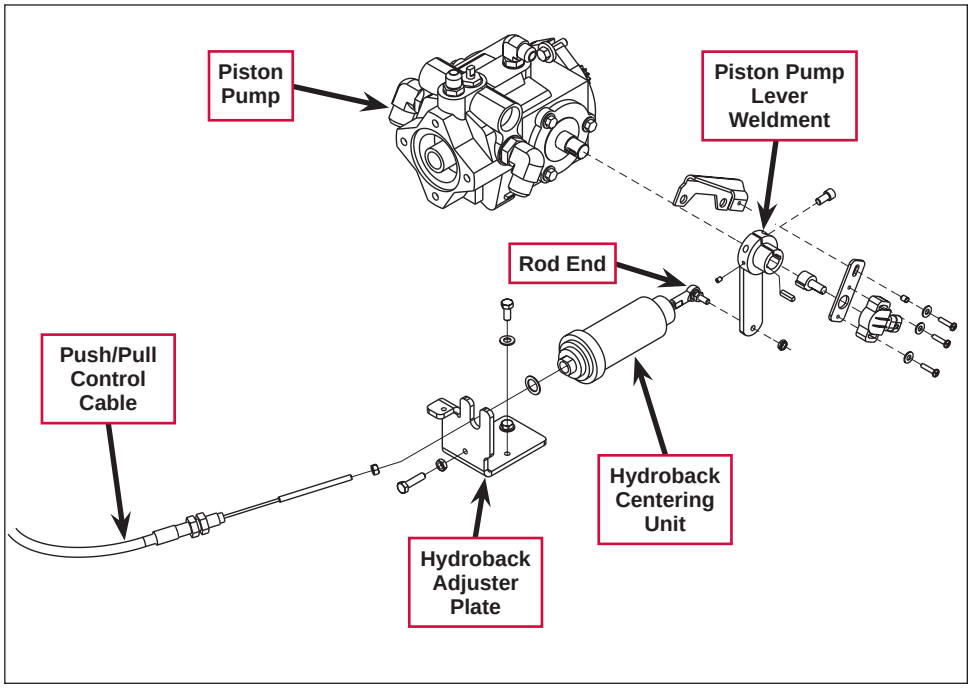


6. Install the new **Hydroback Centering Unit** unit onto the **Push/Pull Control Cable**. Note that the smaller end of the **Cable** will thread through the rear of the **Hydroback Centering Unit** and the larger threads on the outside of the **Cable** will thread directly into the front of the **Hydroback Centering Unit** .

7. Reinstall the locknut and **Rod End** onto the **Push/Pull Control Cable**.

8. Reinstall the **Rod End** into the **Piston Pump Lever Weldment**.

9. Position the **Push/Pull Control Cable** and attached **Hydroback Centering Unit** into the **Hydroback Adjuster Plate** by the **Piston Pump**. Make sure the star washer is located on the rear side of the **Hydroback Adjuster Plate** and contacts the front of the **Hydroback Centering Unit**, then tighten the jam nut.

10. After installing a new **Hydroback Centering Unit** unit, set the foot pedal/Hydroback neutral position according to the instructions in the ***Foot Pedal/ Hydroback Neutral Adjustment*** section.

## *Traction Drive Motor Hose Routing*

If the traction drive motor or the **Hydraulic Hoses** to the motor are replaced or repaired, it's important to route the **Hydraulic Hoses** correctly when reinstalled to prevent wear or damage to the **Hydraulic Hoses** and surrounding components.

When reinstalling the traction drive motor **Hydraulic Hoses**:

1. Install the **Hydraulic Hoses** but leave the fittings loose on both ends so the **Hydraulic Hoses** can pivot.
2. Turn the steering wheel all the way toward the left. The fittings should be on the front side of the motor.
3. Make sure the **Hydraulic Hoses** are routed up and inside the channel in the **Drive Wheel Weldment** as shown on the right, and lie flat against the **Bottom of the Frame** as shown below.
4. Make sure the **Hydraulic Hoses** are not twisted, then tighten the fittings on both ends to 45 ft-lbs. Note that the fittings must be tight to prevent loosening while steering.
5. Turn the steering wheel all the way toward the left and right several times to make sure the **Hydraulic Hoses** don't catch and are not rubbing against the surrounding components.

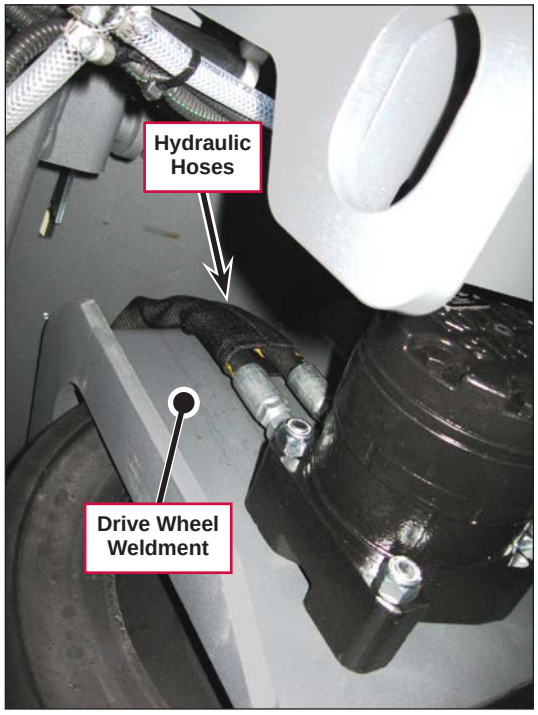


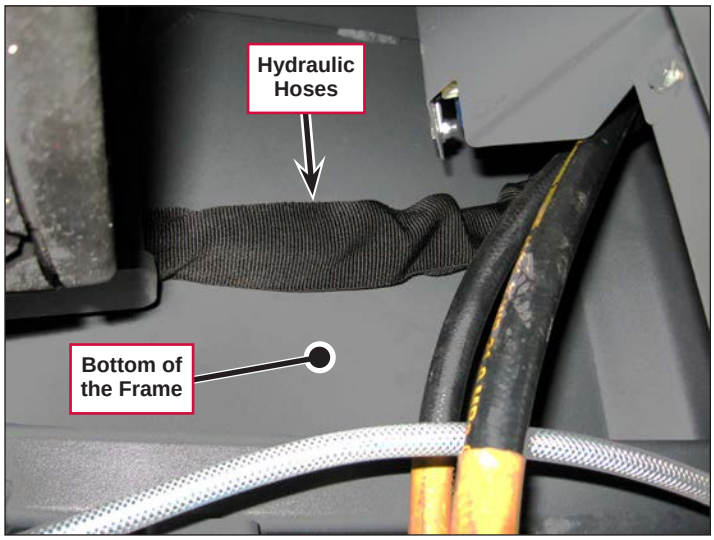

# Specifications

## Component Specifications

| Component | Specifications |
|---|---|
| Tire (front 1) drive/steer | Size 18 in x 6 in [457 mm x 152 mm] P7 solid |
| Traction Drive Motor | Displacement – 18.3 CIR |
| | Shaft Rotation – Clockwise (as viewed from slot end) |
| Wheel Drive Piston Pump | Displacement – 1.44 CIR |
| | Speed – 3600 RPM Max. |
| | Continuous Pressure – 3000 psi |
| | Maximum Case Pressure – 25 psi |
| | Relief Setting – 2500 psi/3500 psi |
| | Charge Relief – 200-250 psi, high flow |

## *Wheel Drive System Torque Specifications*

| Description | Torque Specification |
|---|---|
| Steering Castle (Spindle) Nut | Torque to 40 ft.-lb.,then loosen to align cotter pin. |
| ¾”-16 Hex Jam Nut | Torque to 150 ft.-lb. |
| ½”-20 x 1.25 Hex Screw | Use Loctite® 242, torque to 90 ft.-lb. |
| ½”-13 Nyloc™ Hex Nut | Torque to 100 ft.-lb. |
| Drive Wheel Motor Spindle Nut | Torque to 375 ft.-lb. (lubed) or 475 ft.-lb. (dry), then tighten to align cross hole. |
| Wheel Studs | Torque to 100 ft.-lb. |

