Instruction Sheet

DWRSR-ZL

Zero Clearance Latch

US Patent 7,188,570 B2

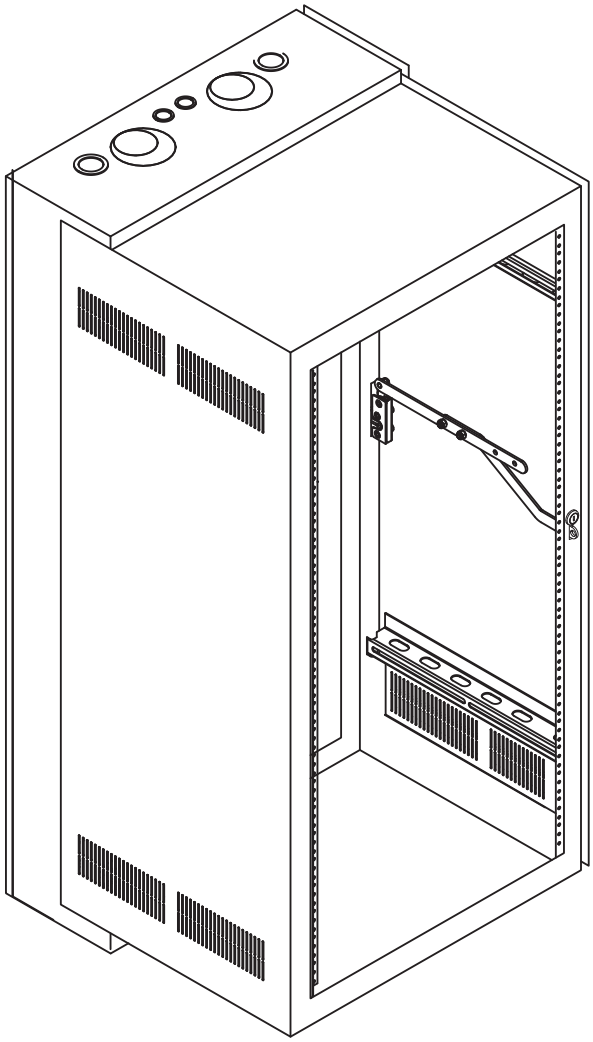

THANK YOU

Thank you for purchasing the DWRSR-ZL Zero Clearance Latch. Please read these instructions thoroughly before installing this product.

PRODUCT FEATURES

- Allows for side-by-side and corner mounting of DWR and SR Series Racks
- Unique design saves valuable wall space
- Easy-to-use release latch can be locked from the front for added security

Middle Atlantic Products

ASSEMBLY

TOOLS REQUIRED:

- #2 Phillips Screwdriver
- 7/16" Wrench
- 11/32 Nut Driver or Socket
- Star-Post Wrench (Provided)

1) On the backpan, remove the existing key lock and lock clip. Save for later use. **(FIGURE A)**

2) Remove the two nuts on the inside of backpan and remove the latch. Discard parts indicated. **(FIGURE A)**

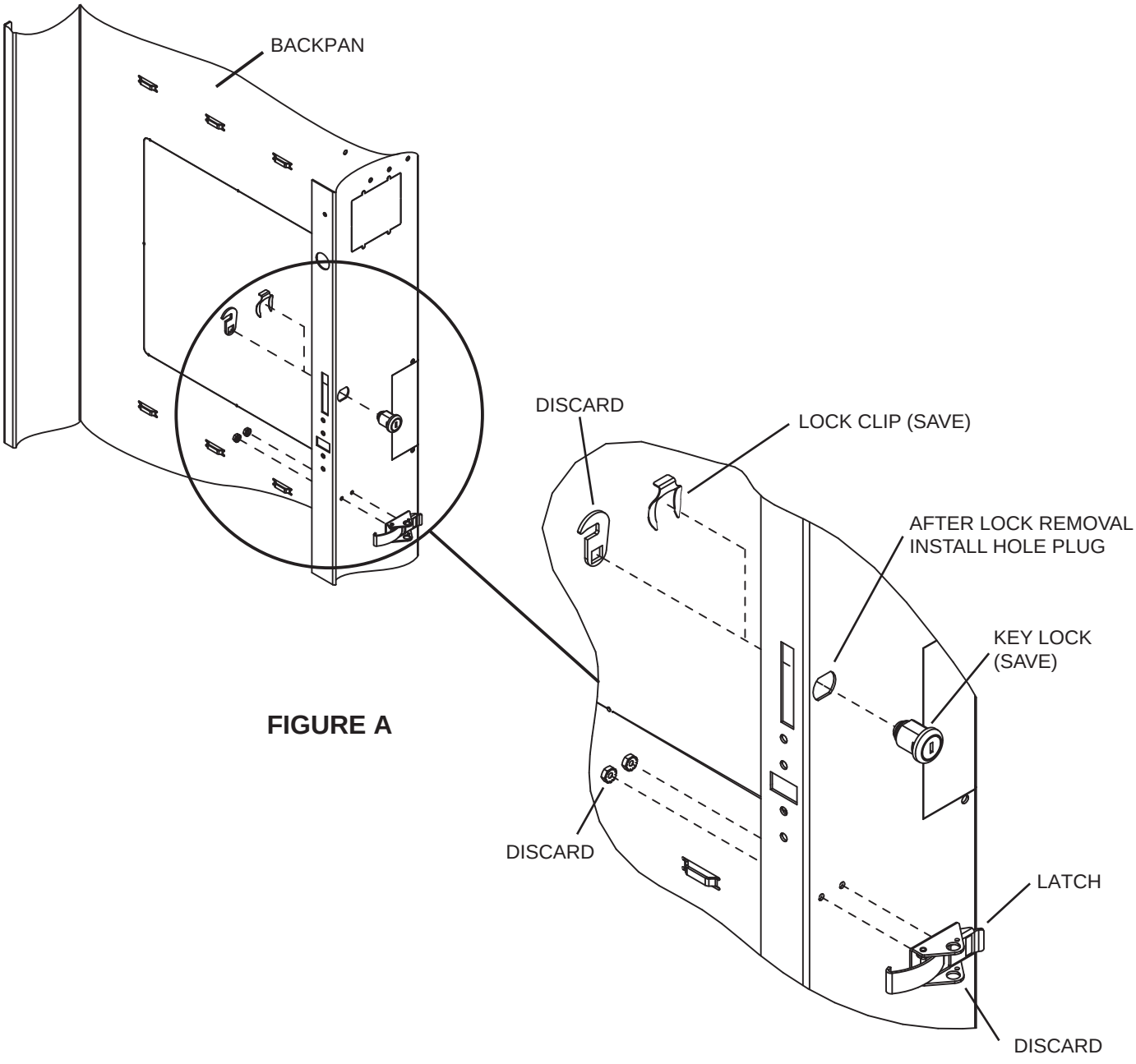

FIGURE A

3) On the backpan, install L-bracket using two 3/8" long screws provided. **(FIGURE B)**

4) Determine the depth of the center section and using the hardware provided, configure index rods to the appropriate depth. (**FIGURE C** for depths and orientation)

NOTE: Index rod / extension (if needed) should pivot freely on rotary latch. Tighten nut, then back off approximately 1/2 turn to allow free movement.

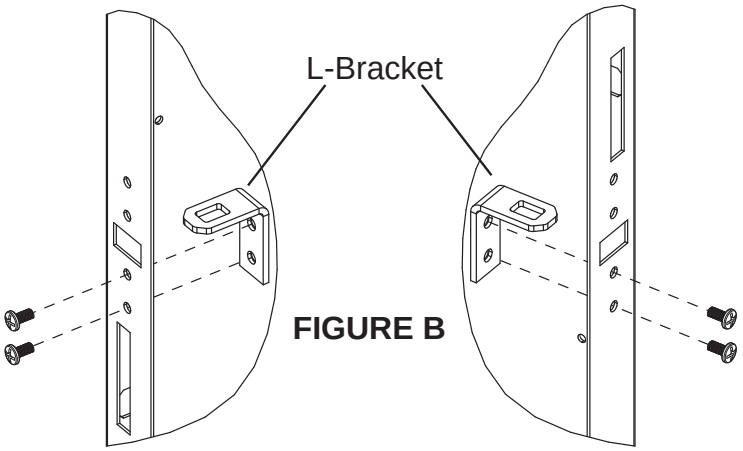

FIGURE B

FIGURE C

17" Depth (11.5" deep center section)

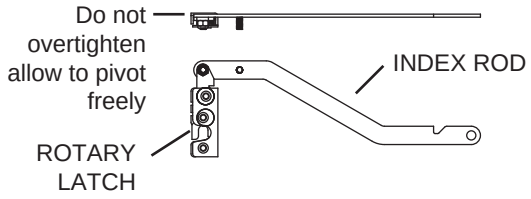

28" Depth (22.5" deep center section)

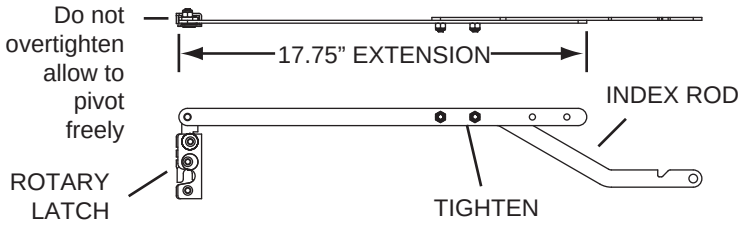

22" Depth (16.5" deep center section)

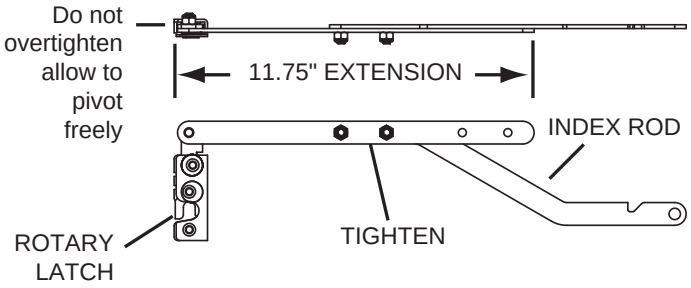

32" Depth (26.5" deep center section)

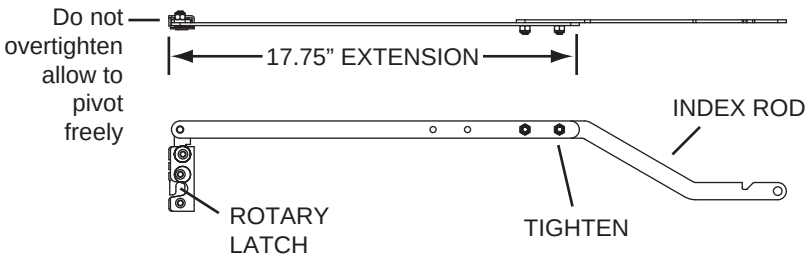

26" Depth (20.5" deep center section)

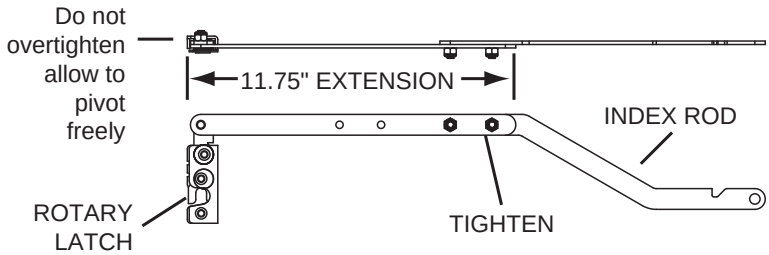

5) On the center section, determine the pivot side and remove the hole plug from the opposite side.

6) Install the key lock and lock clip removed in step 1. **(FIGURE D)**

NOTE: Loosen and slide the front rackrail back to ease the installation of the lock and cam.

7) Install the new cam provided in the hardware kit. The cam should face toward the index rod hole when in the locked position, and toward the inside of the rack when in the unlocked position.

NOTE: Left hand pivot shown. Invert for right hand pivot.

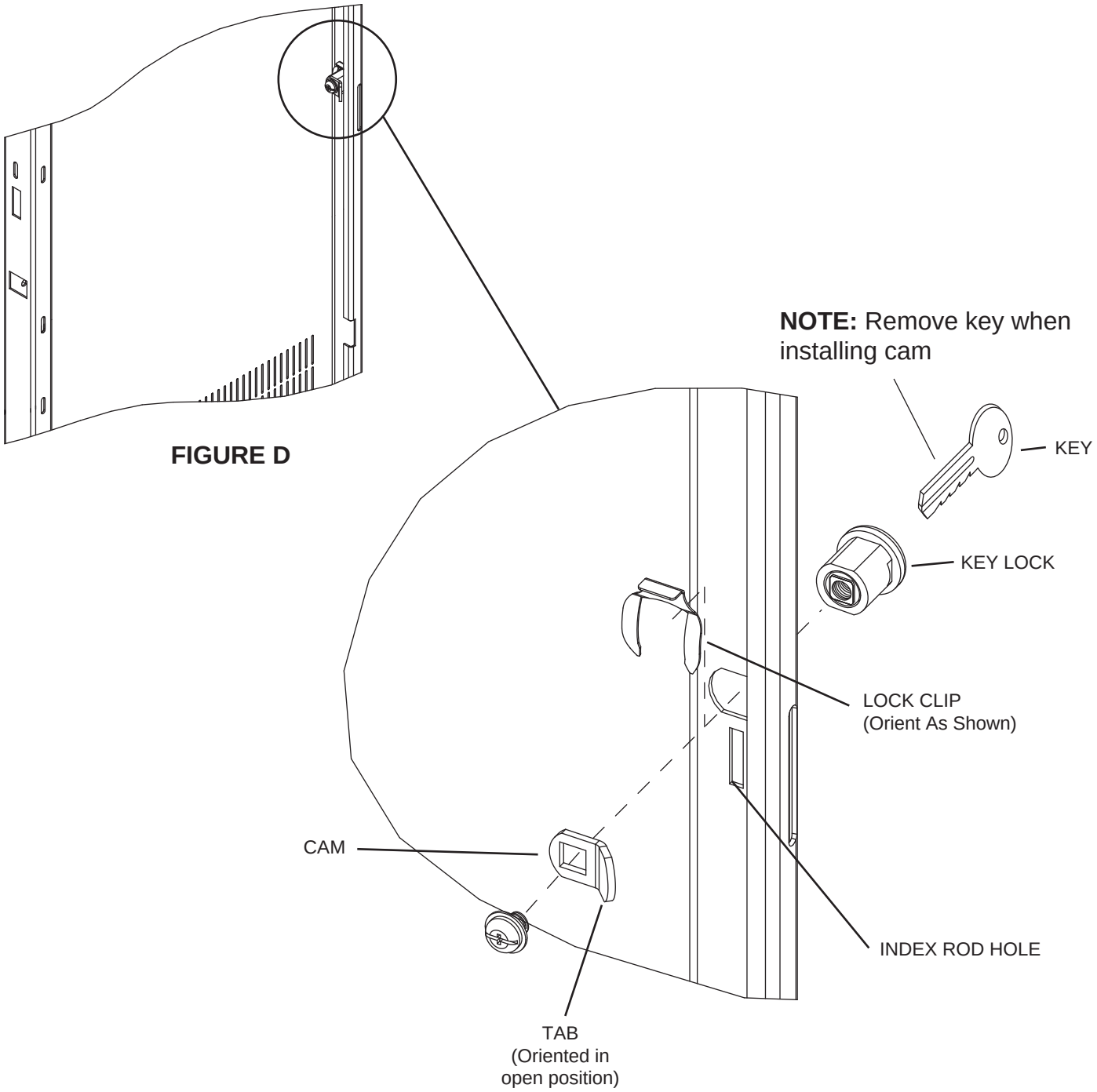

FIGURE D

8) Install the index rod into the index rod hole. **(FIGURE E)**

9) Secure the rotary latch to the center section using the standoffs and security screws provided. **(FIGURE E)**

NOTE: Left hand pivot installation shown. For the right hand pivot invert the latch assembly.

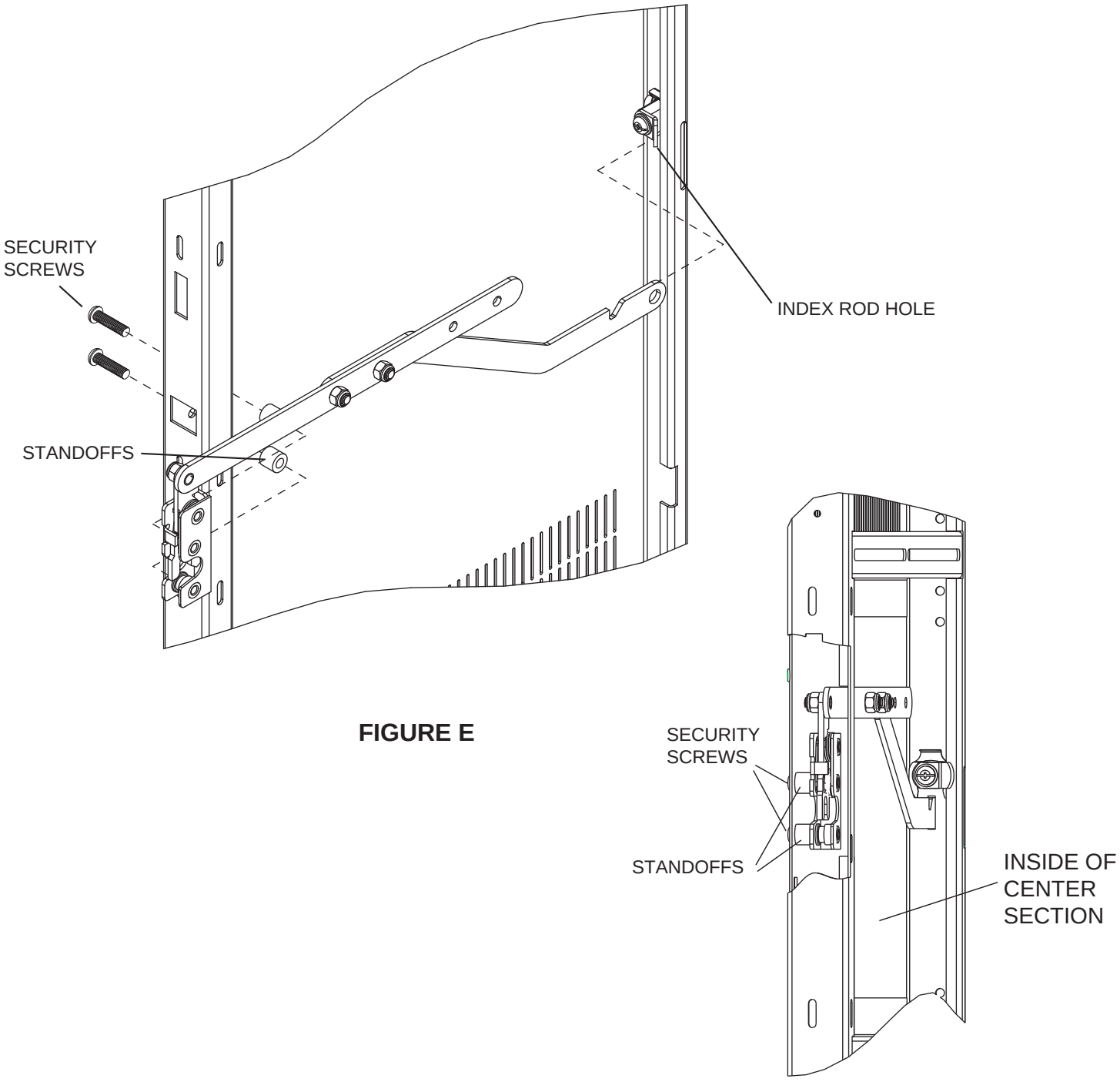

FIGURE E

OPERATING INSTRUCTIONS

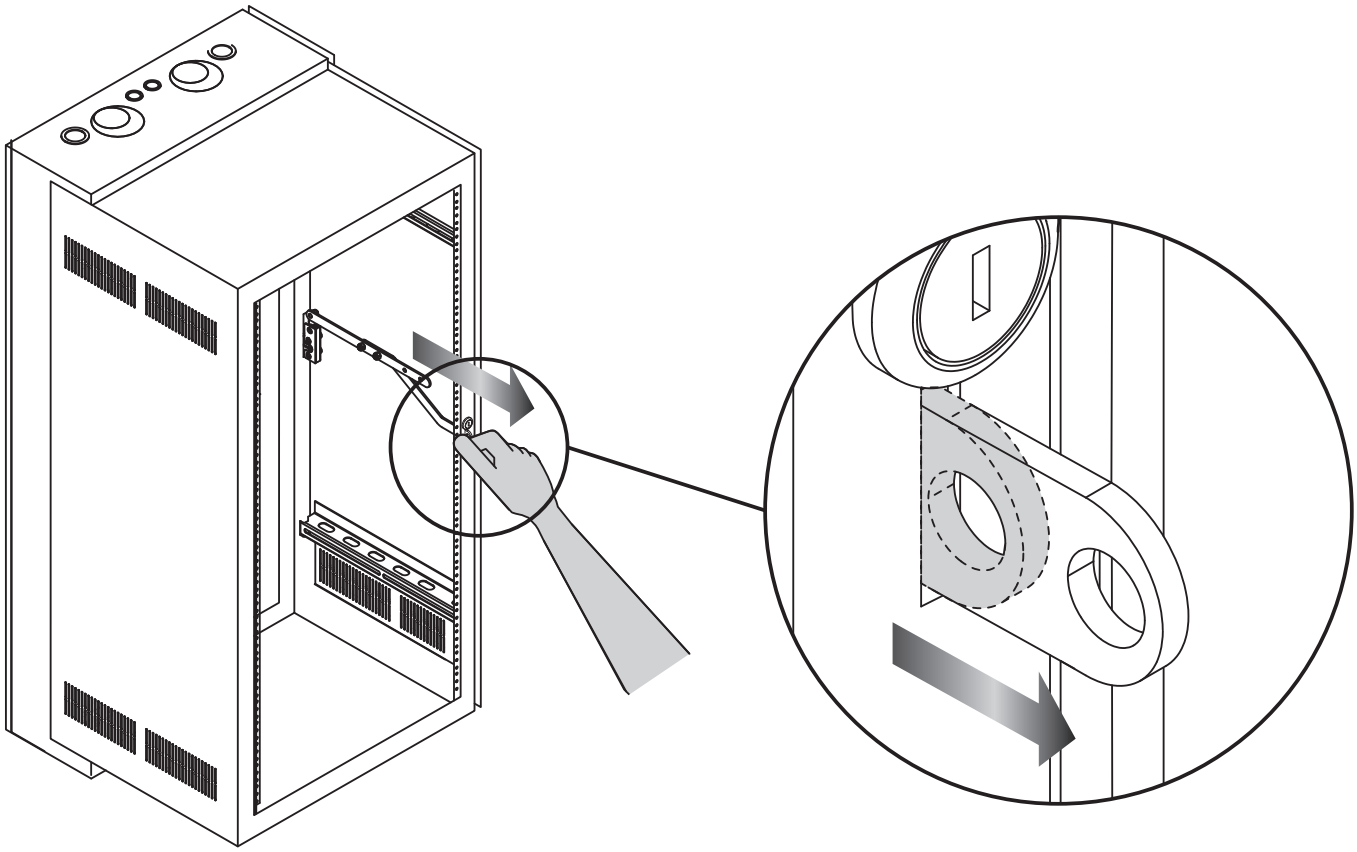

1) Pull the latch and rotate the center section out.

2) To close, rotate the center section until it latches onto the backpan.

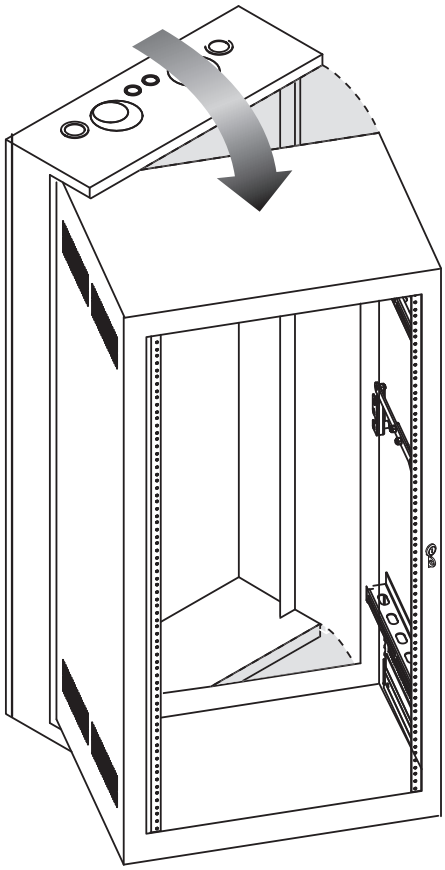

ZERO CLEARANCE LATCH DIMENSIONS

DWR SERIES

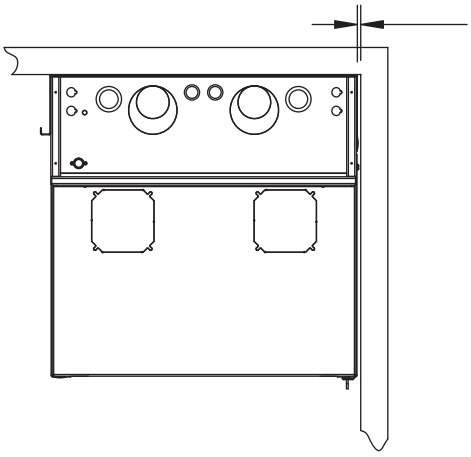

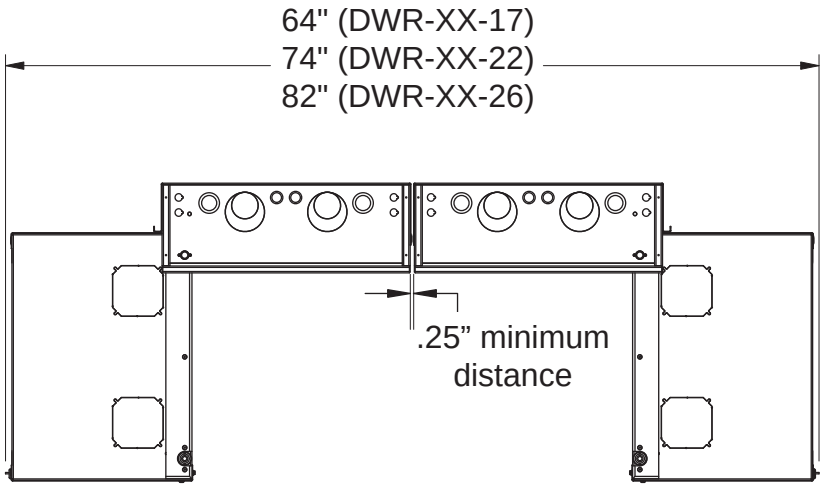

SR SERIES

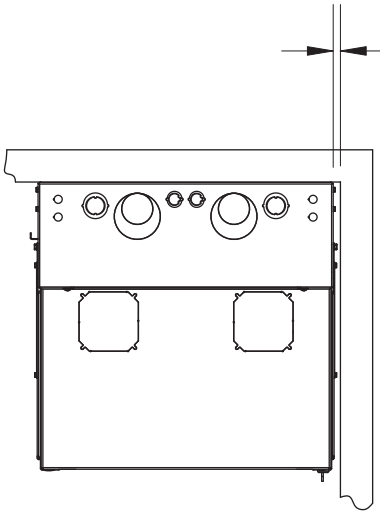

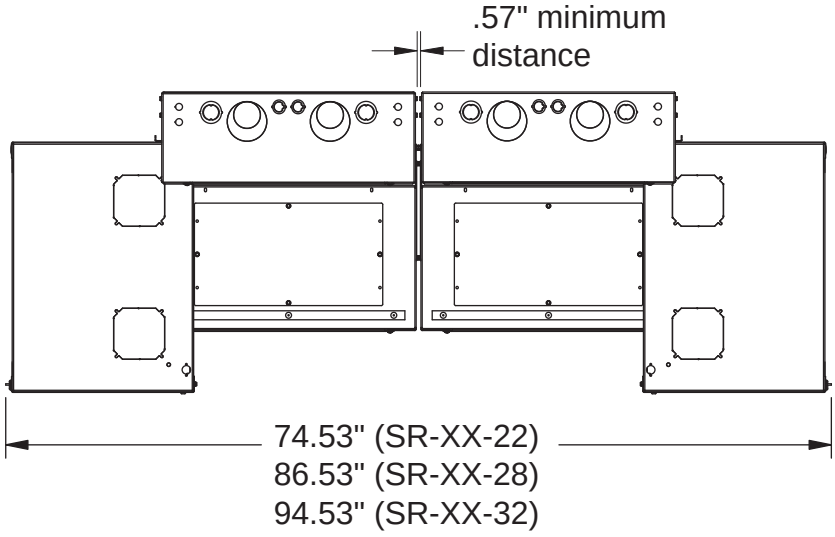

WARRANTY

Middle Atlantic Products (the "Company") warrants the DWRSR-ZL Zero Clearance Latch to be free from defects in material or workmanship under normal use and conditions for a period of (3) years from date of shipment by the Company.

The Company's entire liability to the purchaser, and the purchaser's (or any other party's) sole and exclusive remedy, under this warranty shall be limited, at the Company's option, to either (a) return of and refund of the price paid for, or (b) repair or replacement at the Company's factory of the products purchased, or any part or parts thereof, which the Company has determined to be defective after inspection thereof at the Company's factory.

This warranty does not cover damage due to acts of God, accident, misuse, abuse or negligence by parties other than the Company, or any modification or alteration of the products. In addition, this warranty does not cover damage due to improper handling, assembly, installation or maintenance.

THIS WARRANTY IS IN LIEU OF ALL OTHER WARRANTIES OF ANY KIND, EITHER EXPRESSED OR IMPLIED, INCLUDING, BUT NOT LIMITED TO, IMPLIED WARRANTIES OF MERCHANTABILITY AND FITNESS FOR A PARTICULAR PURPOSE.

TO THE MAXIMUM EXTENT PERMITTED BY APPLICABLE LAW, IN NO EVENT SHALL THE COMPANY BE LIABLE FOR ANY SPECIAL, INCIDENTAL, INDIRECT, OR CONSEQUENTIAL DAMAGES WHATSOEVER (INCLUDING, WITHOUT LIMITATION, DAMAGES FOR LOSS OF BUSINESS PROFITS, BUSINESS INTERRUPTION OR ANY OTHER PECUNIARY LOSS) ARISING OUT OF THE USE OF THE PRODUCTS PURCHASED, EVEN IF THE COMPANY HAS BEEN ADVISED OF THE POSSIBILITY OF SUCH DAMAGES. THE COMPANY'S LIABILITY TO THE PURCHASER (OR ANY OTHER PARTY) HEREUNDER, IF ANY, SHALL IN NO EVENT EXCEED THE PURCHASE PRICE OF THE PRODUCTS PAID TO THE COMPANY.

Corporate Headquarters
Corporate Voice 973-839-1011 - Fax 973-839-1976
International Voice +1 973-839-8821 - Fax +1 973-839-4982
middleatlantic.com - info@middleatlantic.com

Middle Atlantic Canada
Voice 613-836-2501 - Fax 613-836-2690
middleatlantic.ca - customerservicecanada@middleatlantic.ca

Factory Distribution
USA: NJ - CA - IL Canada: ON - BC

At Middle Atlantic Products we are always listening. Your comments are welcome.

Middle Atlantic Products is an ISO 9001 and ISO 14001 Registered Company.

30% Recycled Paper