Maxi-Therm MCU Troubleshooting Guide

Please refer to the typical drawing attached.

Problem	Possible cause	Symptom	Solution
Not achieving temperature setpoint (lack of capacity)	Defective condensate control valve (item B)	Valve opening does not match control signal sent to it	Refer to the control valve manual or contact your local representative for assistance.
	Condensate back pressure too high	Capacity increases when condensate outlet of MCU system is isolated from buidling's return and condensate is dumped temporarily to floor drain using the test valve (see dwg p. 5/5)	Check for condensate backpressure causes (manual valve closed, condensate lift too large, etc.)
	Insufficient steam pressure supplied to HX	Main steam valve (item K) is open but steam pressure inside HX is below design pressure	Check for low steam pressure causes on the steam supply piping upstream of the MCU system
		Main steam valve (item K) is closed but control signal asks for open	Refer to the main steam valve manual or contact your local representative for assistance.
	Plugged strainer (item H)	Capacity increases when strainer blow down valve (item DD) is opened and condensate is dumped temporarily to floor drain but does NOT increase when condensate is dumped using the test valve (see dwg p. 5/5)	Clean or replace strainer screen
	Defective steam trap (item C)	Capacity increases when strainer blow down valve (item DD) is opened and condensate is dumped temporarily to floor drain , does NOT increase when condensate is dumped using the test valve (see dwg p. 5/5) and cleaning the strainer screen did not solve the problem	Replace internal mechanism and/or float of the steam trap
	Defective air vent (item M)	Air vent (item M) is cold, meaing air is trapped inside the HX, preventing proper heat transfer	Replace air vent
	Flow conditions exceeds maximum design conditions	High flow alarm and/or High condensate temperature alarm and/or delta T accross the system is higher than design conditions	Bring back flow conditions within design conditions or contact your local representative to see if capacity can be increased.

System stays in start-up mode	Steam pressure never reaches the operating pressure setpoint	Main steam valve (item K) is closed and start-up valve (item U) is open but steam pressure never reaches pressure setpoint to enable normal operation	Set the steam pressure setpoint at a lower value in the controller.
		Main steam valve (item K) is closed and start-up valve (item U) is open but steam pressure never reaches pressure setpoint to enable normal operation. Pressure increases and reaches the setpoint when condensate manual valve (item BB) is shut.	Check condensate control valve (item B) for tight shutoff sing the test valve (see dwg p. 5/5).
	Defective start-up valve (item U)	Main steam valve (item K) is closed and start-up valve (item U) is closed but control signal asks for open.	Refer to the start-up valve manual or contact your local representative for assistance.
Poor temperature control	Unstable water flow	Flow sensor readings vary drastically and/or minimum flow is not met	Check/correct water flow
	PID Control Loop needs tuning	Liquid outlet temperature is unstable despite fairly stable flow and inlet liquid temperature	Contact your local representative for assistance.
	Condensate control valve (item B) needs tuning	Condensate control valve (item B) is hunting despite fairly stable control signal and/or does not shut tight	Contact your local representative for assistance.

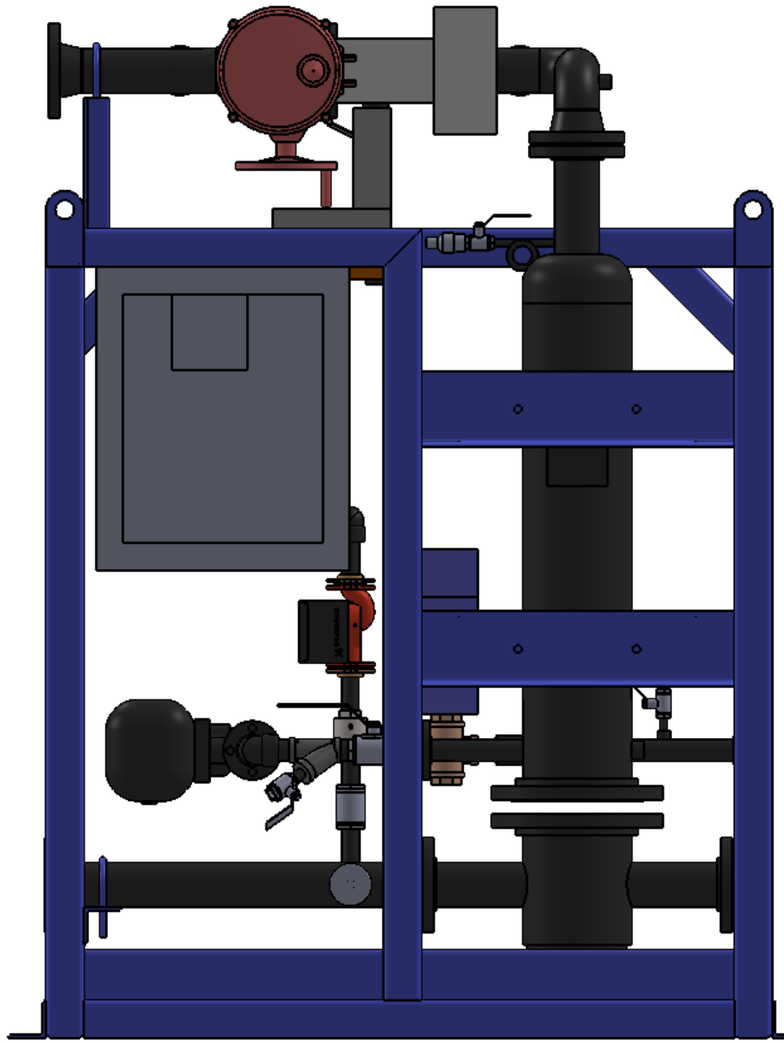

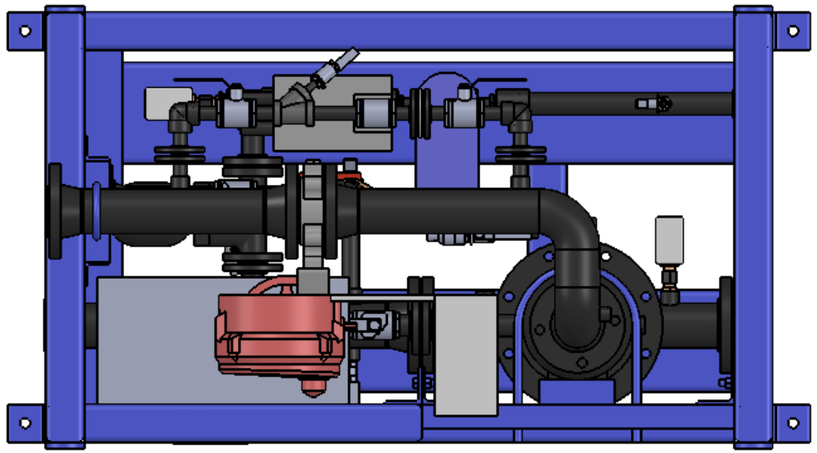

maxi therm beyond steam	CUSTOMER:	PROJECT:			
	TITLE: FLOODED BUILDING HEAT SYSTEM	MODEL:		SCALE: N.T.S	SHEET: 1 / 5
	BY:	REVISED:	DATE:	DWG.NO.	REV.

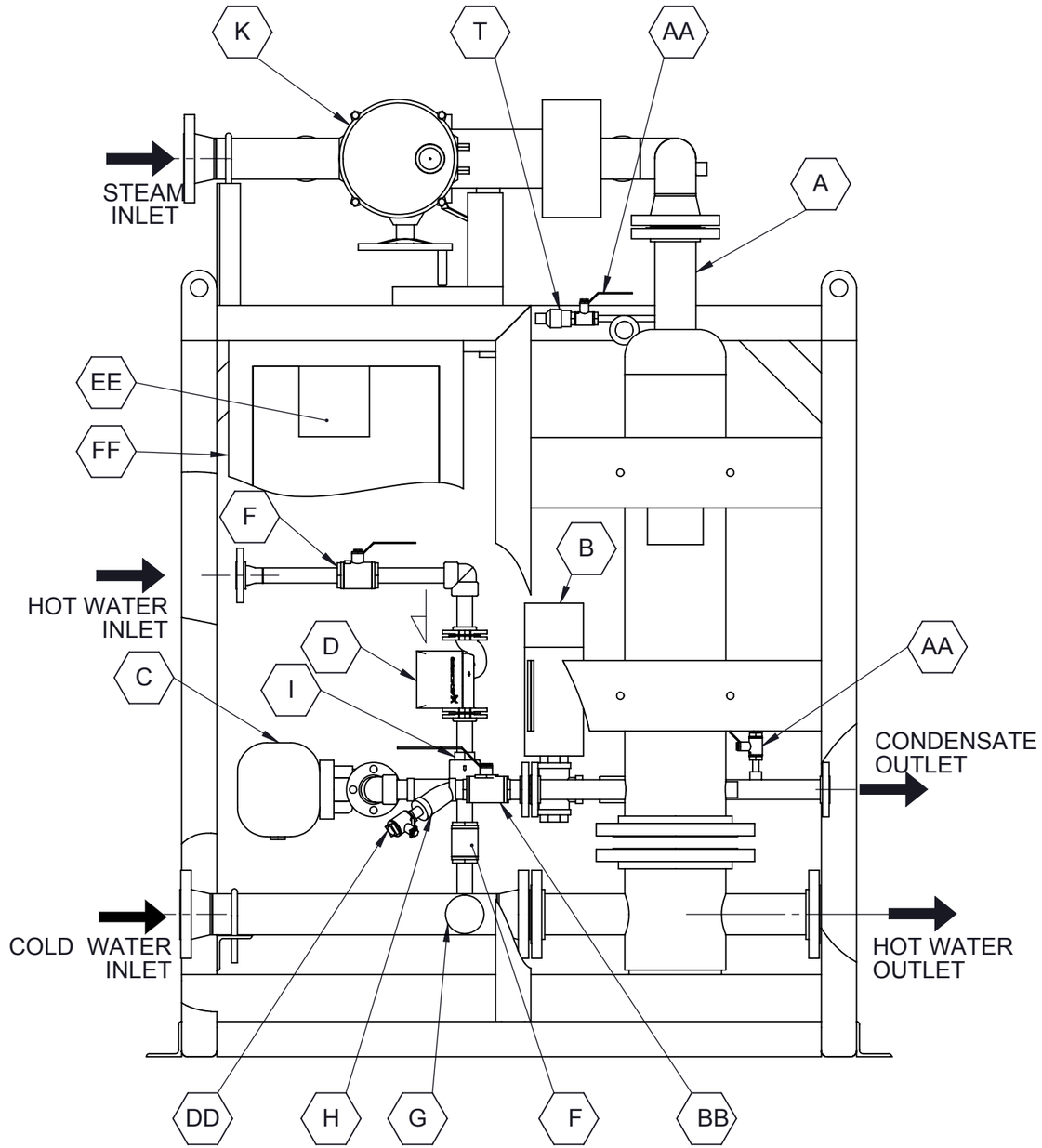

FRONT ELEVATION

maxi therm beyond steam™

CUSTOMER:	PROJECT:			
TITLE: FLOODED BUILDING HEAT SYSTEM	MODEL:		SCALE: N.T.S	SHEET: 2 / 5
BY:	REVISED:	DATE:	DWG.NO.	REV.

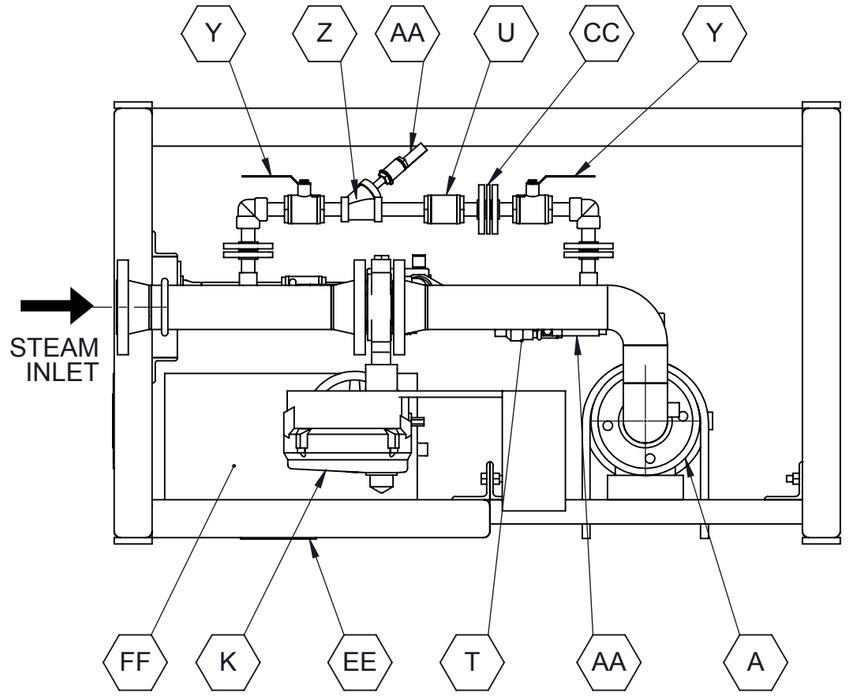

TOP PLAN

No.	EQUIPMENT	QTY
A	VERTICAL HEAT EXCHANGER BY MAXI-THERM	1
B	MODULATING FAIL-SAFE ELECTRONIC CONTROL VALVE BY MAXI-THERM	1
C	MAXI - THERM FLOAT STEAM TRAP MODEL FT11 FLANGED	1
D	STABILIZING PUMP BY MAXI-THERM	1
E	ELECTRONIC TEMPERATURE SENSOR BY MAXI-THERM	2
F	MANUAL VALVE BY MAXI-THERM	2
G	BI-METAL THERMOMETERS WITH THERMOWELL BY MAXI-THERM	2
H	STRAINER BY MAXI-THERM	1
I	Ø1" STAINLESS STEEL CHECK VALVE BY MAXI-THERM	1
J	CONDENSATE MIXER WITH INTEGRATED CHECK VALVE AND UNIONS BY MAXI-THERM	1
K	ELECTRIC OVER TEMPERATURE STEAM SECURITY VALVE BY MAXI-THERM	1
L	STRAINER 20 MESH WITH BLOW DOWN VALVE BY CONTRACTOR	1
M	1/2" AIR VENT BY MAXI-THERM	1
N	STRAINER WITH BLOW DOWN VALVE BY CONTRACTOR	2
O	Ø3/4" DRIP TRAPS BY MAXI-THERM	2
P	PRESSURE SAFETY RELIEF VALVE SUPPLIED BY CONTRACTOR	1
Q	PRESSURE GAUGE WITH PIGTAIL AND SNUBBER BY CONTRACTOR	1
R	CHECK VALVE BY CONTRACTOR	1
S	VACUUM BREAKER BY MAXI-THERM	1
T	PRESSURE TRANSDUCER BY MAXI-THERM	1
U	3/4" AUTOMATIC START UP VALVE BY MAXI-THERM	1
V	FLOW SENSOR BY MAXI-THERM	1
Y	MANUAL VALVE BY MAXI-THERM	2
Z	3/4" STRAINER BY MAXI-THERM	1
AA	MANUAL VALVE BY MAXI-THERM	3
BB	MANUAL VALVE BY MAXI-THERM	1
CC	ORIFICE PLATE	1
DD	MANUAL VALVE BY MAXI-THERM	1
EE	NAME PLATE	1
FF	CONTROL PANEL BY MAXI-THERM	1

maxi therm beyond steam

CUSTOMER:		PROJECT:			
TITLE: FLOODED BUILDING HEAT SYSTEM		MODEL:		SCALE: N.T.S	SHEET: 3 / 5
BY:		REVISED:	DATE:	DWG.NO.	REV.

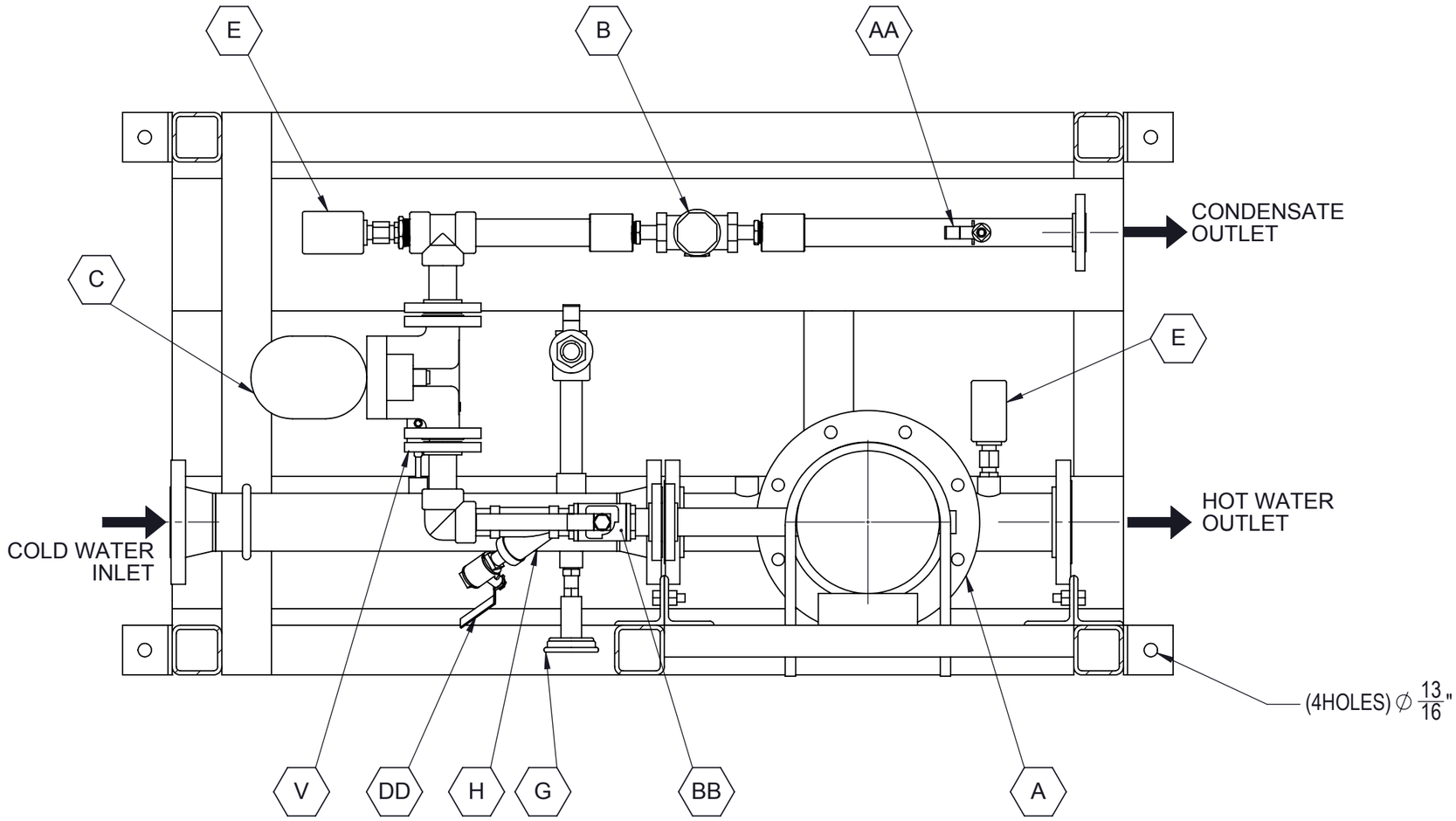

BOTTOM PLAN

maxi therm beyond steam	CUSTOMER:	PROJECT:			
	TITLE: FLOODED BUILDING HEAT SYSTEM	MODEL:		SCALE: N.T.S	SHEET: 4 / 5
	BY:	REVISED:	DATE:	DWG.NO.	REV.

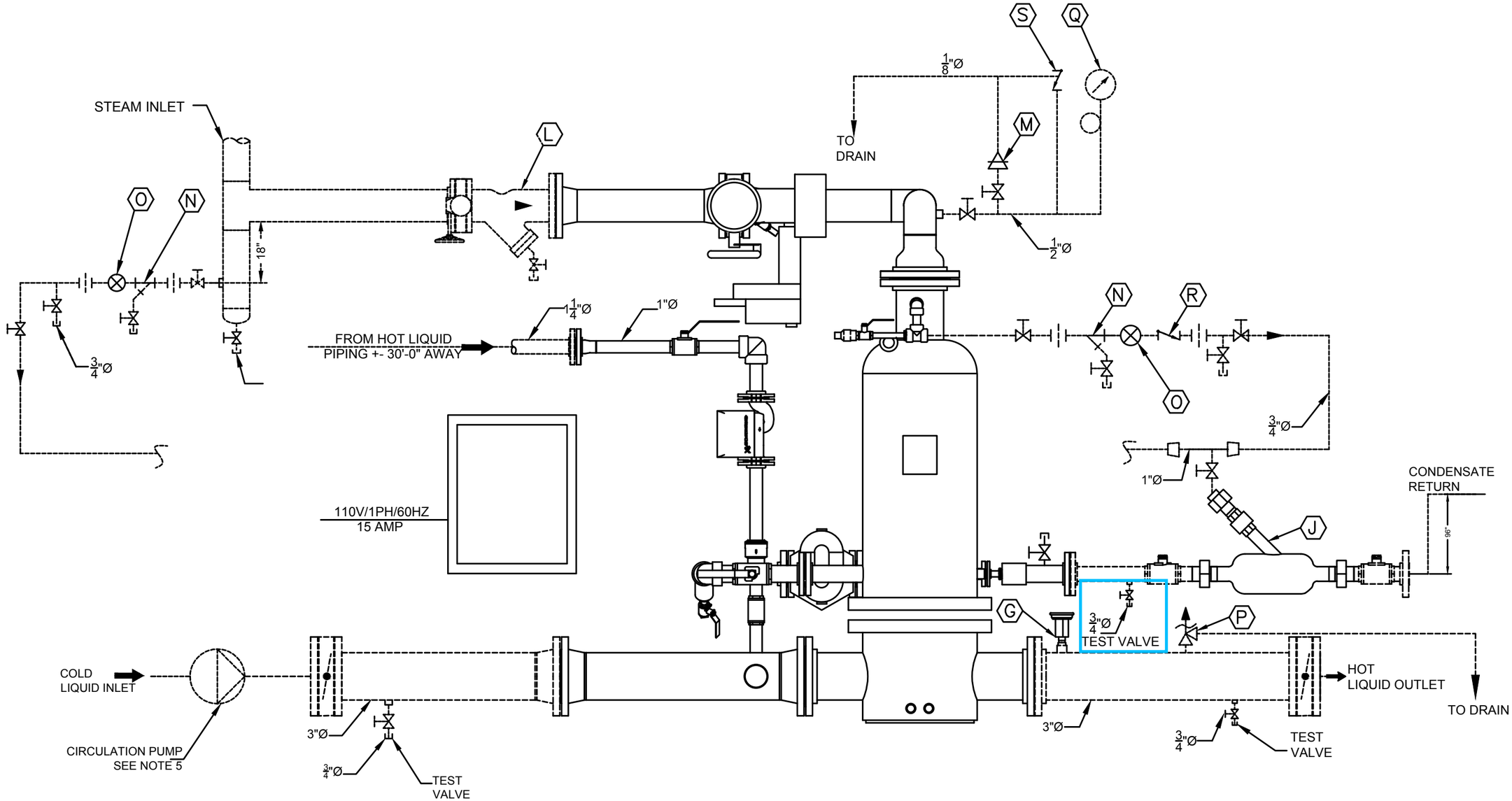

THIS DRAWING, INFORMATION AND SUBJECT MATTER THEREOF ARE THE SOLE AND EXCLUSIVE PROPERTY OF MAXI-THERM INC.

N.B. ALL ITEMS SHOWN IN DOTTED LINES MUST BE SUPPLIED AND INSTALLED BY CONTRACTOR.

maxi therm beyond steam™

CUSTOMER:		PROJECT:		
TITLE: FLOODED BUILDING HEAT SYSTEM		MODEL:	SCALE: N.T.S	SHEET: 5/5
BY:		REVISED:	DWG.NO.	REV.