Susol Super Solution

Metasol Meta Solution

Air Circuit Breakers



LSIS



Susol · Metasol ACB

LSIS Made It!



Susol/Metasol Air Circuit Breakers



Super/Meta Solution

Contents :

Overview 4

External configuration 22

Internal configuration 24

Ordering 26

Ratings 34

Trip relays 42

Accessories 68

Electrical diagram 96

Dimensions 98

Technical information

- Insulation voltage 117
- Temperature derating 119
- Operating conditions 120
- Installation recommendation 121
- Protective coordination 128

Standards & Approval 135

Time chart 136

Ordering sheet 139

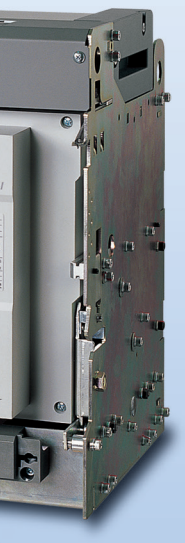

ACB
Susol / Metasol

Premium Susol/Metasol ACB meets your demands for high breaking capacity, fully line-up, and optimized panel size.
Various accessories and connection methods realize user-friendly handling.

Susol/Metasol provides you with total solutions with an advanced trip relay for measurement, diagnosis, analysis, and communication as well as protective functions for absolute protective coordination and electric power monitoring system.

LSIS Super Solution series





Susol series circuit breakers are suitable for

- Protection of power distribution
- Protection of motor & its control device
- Controlling and disconnecting circuits



Susol Manual Motor Starters

Optimum technical support for

(Cascading, Discrimination, Type 2 coordination)

- Selecting economical protection system
- Quarantee safety of the installation
- Reducing the stress on components and damage
- Guarantee service continuity





Susol Air Circuit Breakers



Susol Molded Circuit Breakers

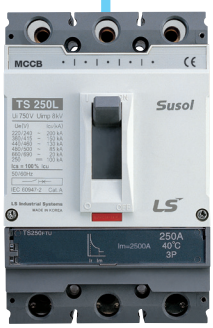

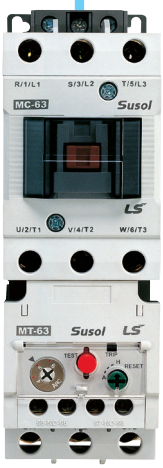

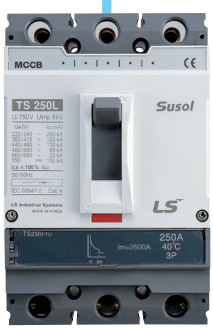



Susol Magnetic Contactors &
Overload Relays

Susol

Super solution





Air circuit breaker is to be installed in low voltage distribution line to break the circuit when over current, short circuit, or ground fault occurs in order to protect user and other subordinate components.

Susol ACB

Air Circuit Breakers

LSIS Technology, 150kA only

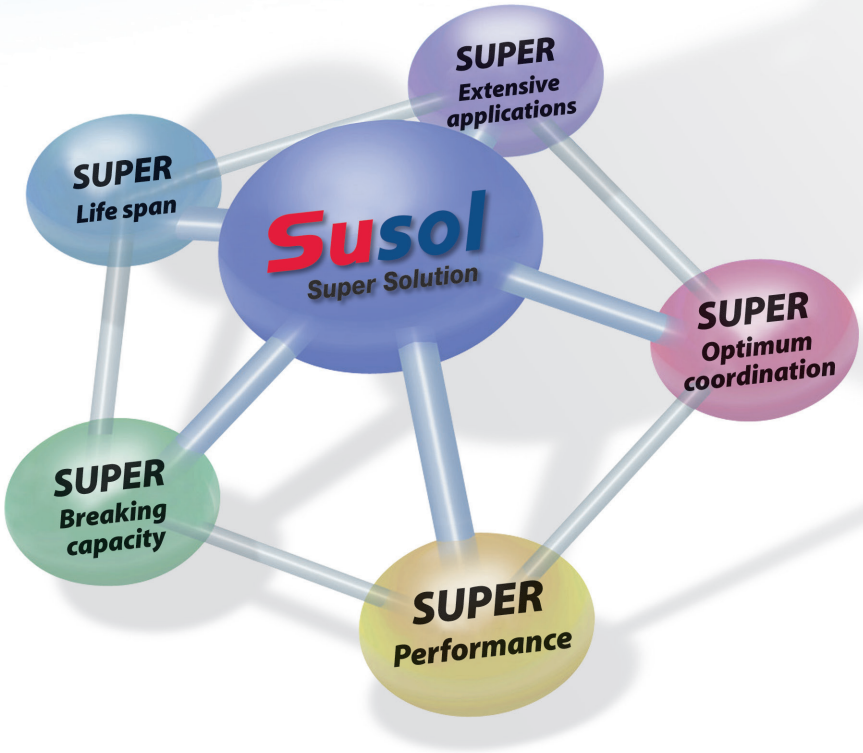

- *KS certified (KS C 4620)*
- *KEPIC(Nuclear rating) and quality (Q-class) certified.*
- *LR, ABS, DNV, KR, BV, GL, RINA, NK certified*
- *Maximum breaking capacity : 150kA (6300AF at 500Vac)*
- *2000/4000/6300AF, 3 Ampere Frame Sizes*
- *N phase current conducting capacity : 100%*
- *Offers variety of accessories including digital trip relay with metering/mearsuring/analysis/ communication functions.*
- *Rated impulse voltage (Uimp) : 12kV*

■ Ratings

- *In : 630~6300AF 3,4 poles, fixed or draw-in/out type*
- *Ics : 85/100/150kA, 500Vac rating*
- *Icw : 65/85/100kA*

LSIS has passed and achieved Korea's highest and toughest KS rating (KS C 8325 KS C 4620) to prove its safety and functionality in ACB market.

Full line-up & Compact

Up to 6300A, Susol ACB provides fully lined-up 3 frame.
For each frame, there is just one size, which is smaller and more compact.
It makes it possible for you to design the optimized volume panel.



85kA

AH-06~20D

06	630AF
08	800AF
10	1000AF
13	1250AF
16	1600AF
20	2000AF

Icu=Ics=85kA/500Vac
W=334(3p), 419(4p)mm

100kA

AH-06~40E

06	630AF
08	800AF
10	1000AF
13	1250AF
16	1600AF

20	2000AF
25	2500AF
32	3200AF
40	4000AF

Icu=Ics=100kA/500Vac
W=412(3p), 527(4p)mm



150kA

- The highest breaking capacity:
  150kA (6300AF at 500Vac)
- 3 ampere frame sizes:
  2000/4000/6300AF
- N phase current conducting capacity: 100%

AH-40~63G

40	4000AF
50	5000AF
63	6300AF

Icu=Ics=150kA/500Vac
W=785(3p), 1015(4p)mm

Trip Relay (OCR)

Trip relays are classified according to function.

Trip relays are classified according to their usages and functions to maximize customers' satisfaction. Classified trip relays and easy installation.

- Protection: overload, short current, ground fault, earth leakage, under voltage, over voltage, under frequency, over frequency, reverse power, unbalance, etc
- Measurement: voltage, ampere, power, energy, frequency, power factor, Harmonics, etc.
- Event & fault recording: Max. 256 events & faults
- Communication: Modbus/RS-485, Profibus-DP





Susol ACB Trip Relay functioning world-best protection can be interlocked with mechanism. It makes the breaking capacity of ACB improved and ACB's life enhanced, and provides advanced functions - measurement, diagnosis, analysis, and communication.

Susol ACB Trip relay

N type



- L/S/I/G/Thermal

- Self Power
- RTC Timer mounted
- Fault information (LED)

A type



- L/S/I/G(or EL)
- Thermal
- ZSI (Protective coordination)
- Remote Reset
- Modbus/RS-485
- Profibus-DP

- Self Power
- AC/DC 100~250V
- DC 15~60V
- RTC Timer mounted
- Fault Recording (10EA)

P/S type



- L/S/ I/G(or EL)
- Thermal (linear hot start)
- UV/OV/OF/UF/rP/Vun/Iun
- Measurement: V/A/W/Wh/F/PF
- Harmonics (63th), Waveform (S Type)
- ZSI (Protective coordination)
- Remote Reset
- Modbus/RS-485
- Profibus-DP

- AC/DC 100~250V
- DC 15~60V
- RTC Timer mounted
- Event Recording (256EA)
- Fault Recording (256EA)
- Fault Wave (S Type)

Trip relays series



N Type (Normal)
- Self-power + Overcurrent protection



A Type (Ammeter)
- Current Meter + Overcurrent protection + DO control + Communication



P Type (Power Meter)
- A type + Power Meter + Voltage / Frequency / Unbalance protection



S Type (Supreme)
- P type + Harmonics analysis (63 th) + Fault wave recording

Metasol

Meta solution





Air circuit breaker is to be installed in low voltage distribution line to break the circuit when over current, short circuit, or ground fault occurs in order to protect user and other subordinate components.

Metasol ACB

Air Circuit Breakers

This technology leads to Susol **Metasol**.

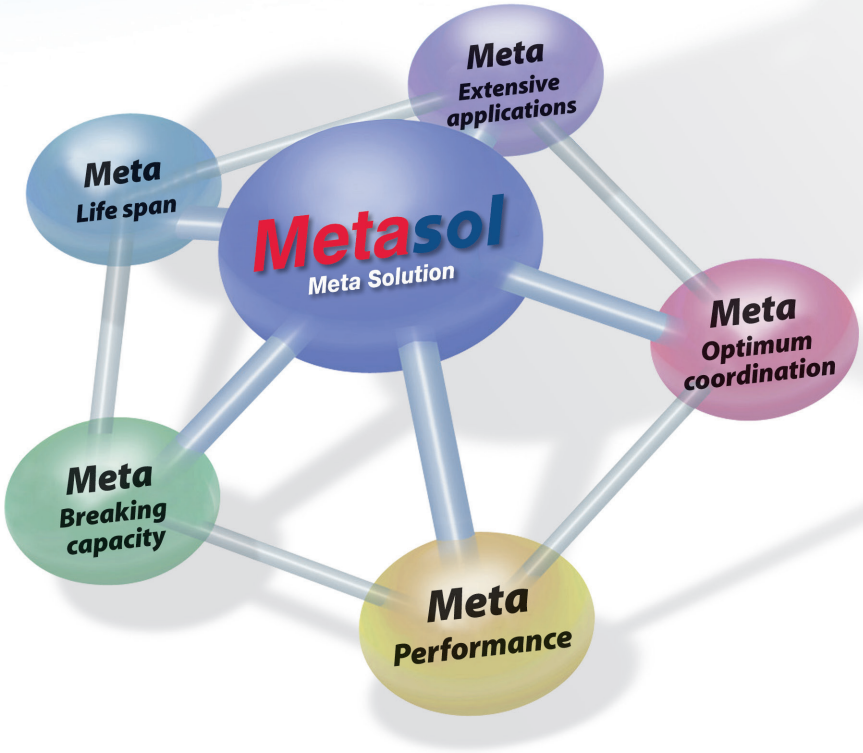

- *KS certified (KS C 4620)*
- *KEPIC(Nuclear rating) and quality (Q-class) certified.*
- *LR, ABS, DNV, KR, BV, GL, RINA, NK certified*
- *Maximum breaking capacity : 120kA (6300AF at 500Vac)*
- *2000/4000/5000/6300AF, 4 Ampere Frame Sizes*
  - 2 different types(AS, AN) for medium and small sizes(below 3200AF)
  - Large size (4000AF and above) Size, variety of line up
- *N phase current conducting capacity : 100%*
- *Offers variety of accessories including digital trip relay with metering/mearsuring/analysis/ communication functions.*
- *Rated impulse voltage (Uimp) : 12kV*

■ Ratings

- *In : 630~1600AF 3 • 4 poles, fixed or draw-in/out type (AN type)*

  630~6300AF 3 • 4 poles, fixed or draw-in/out type (AS type)
- *Ics : 65/70kA, 500Vac (AN type)*

  70/85/100/120kA, 500Vac (AS type)
- *Icw : 50/65kA (AN type)*

  65/85/85/100kA (AS type)

LSIS has passed and achieved Korea's highest and toughest KS rating (KS C 8325 KS C 4620) to prove its safety and functionality in ACB market.

Full line-up & Compact

Up to 6300A, Metasol ACB provides fully lined-up 4 frame.
For each frame, there is just one size, which is smaller and more compact.
It makes it possible for you to design the optimized volume panel.

630~1600 AF (AN)
630~2000 AF (AS)



2000~4000 AF (AS)



4000 /



H = 430mm

W = 334mm

W = 412mm

(65kA)
70kA

(70kA)
85kA

AN-06~16D

06	630AF
08	800AF
10	1000AF
13	1250AF
16	1600AF

Icu=Ics=65kA/500Vac
W=334(3p), 419(4p)mm

AS-06~20D

06	630AF
08	800AF
10	1000AF
13	1250AF
16	1600AF
20	2000AF

Icu=Ics=70kA/500Vac
W=334(3p), 419(4p)mm

AS-20~40E

20	2000AF
25	2500AF
32	3200AF
40	4000AF

Icu=Ics=85kA/500Vac
W=412(3p), 527(4p)mm



100kA 120kA

AS-50F

40	4000AF
50	5000AF

Icu=Ics=100kA/500Vac
W=629(3p), 799(4p)mm

AS-40~63G

40	4000AF
50	5000AF
63	6300AF

Icu=Ics=120kA/500Vac
W=785(3p), 1015(4p)mm

- The highest breaking capacity: 150kA (6300AF at 500Vac)
- 4 ampere frame sizes: 2000/4000/5000/6300AF
- N phase current conducting capacity: 100%

Trip Relay (OCR)

Trip relays are classified according to function.

Trip relays are classified according to their usages and functions to maximize customers' satisfaction. Classified trip relays and easy installation.

- Protection: overload, short current, ground fault, earth leakage, under voltage, over voltage, under frequency, over frequency, reverse power, unbalance, etc
- Measurement: voltage, ampere, power, energy, frequency, power factor, Harmonics, etc.
- Event & fault recording: Max. 256 events & faults
- Communication: Modbus/RS-485, Profibus-DP





Metasol ACB Trip Relay functioning world-best protection can be interlocked with mechanism. It makes the breaking capacity of ACB improved and ACB's life enhanced, and provides advanced functions - measurement, diagnosis, analysis, and communication.

Metasol ACB Trip relay

N type



- L/S/I/G/Thermal

- Self Power
- RTC Timer mounted
- Fault information (LED)

A type



- L/S/I/G(or EL)
- Thermal
- ZSI (Protective coordination)
- Remote Reset
- Modbus/RS-485
- Profibus-DP

- Self Power
- AC/DC 100~250V
- DC 15~60V
- RTC Timer mounted
- Fault Recording (10EA)

P type



- L/S/ I/G(or EL)
- Thermal (linear hot start)
- UV/OV/OF/UF/rP/Vun/Iun
- Measurement: V/A/W/Wh/F/PF
- ZSI (Protective coordination)
- Remote Reset
- Modbus/RS-485
- Profibus-DP

- AC/DC 100~250V
- DC 15~60V
- RTC Timer mounted
- Event Recording (256EA)
- Fault Recording (256EA)

Trip relays series



N Type (Normal)
- Self-power + Overcurrent protection



A Type (Ammeter)
- Current Meter + Overcurrent protection + DO control + Communication



P Type (Power Meter)
- A type + Power Meter + Voltage / Frequency / Unbalance protection

Accessories

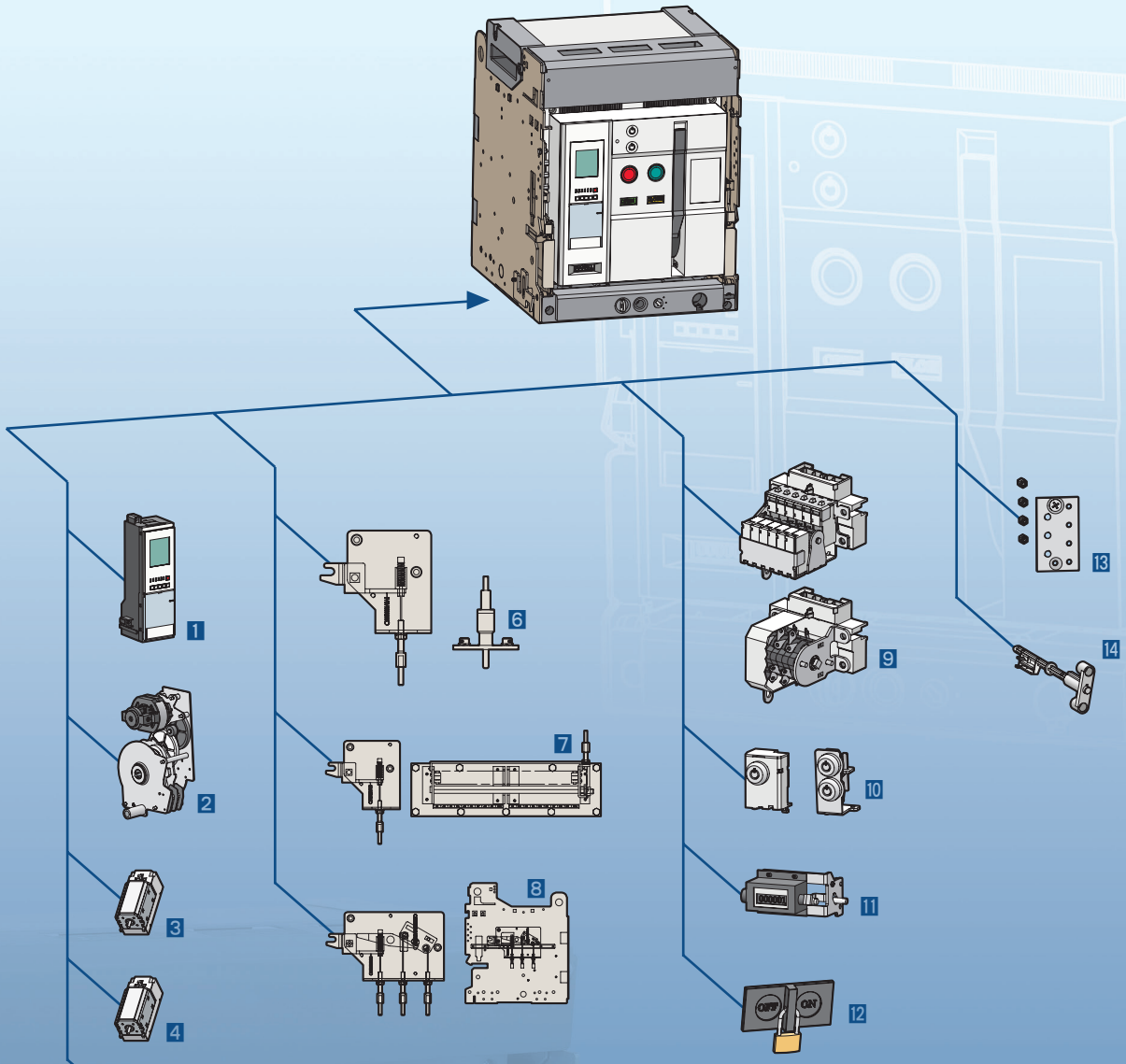

ACB

1 Trip Relay (OCR)
2 Motor (M)
3 Closing Coil (CC)
4 Shunt Coil (SHT)
5 Under Voltage Trip Device (UVT)
6 Door Interlock (DI)
7 MOC (Mechanical Operated Cell Switch)
8 Mechanical Interlock (MI)
9 Auxiliary Switch (AX)
10 Key Lock (K1), Double Key Lock (K3)
11 Counter (C)
12 On/Off Button Lock (B)
13 Miss Insertion Preventing Device (MIP)
14 Manual Reset Button (MRB)

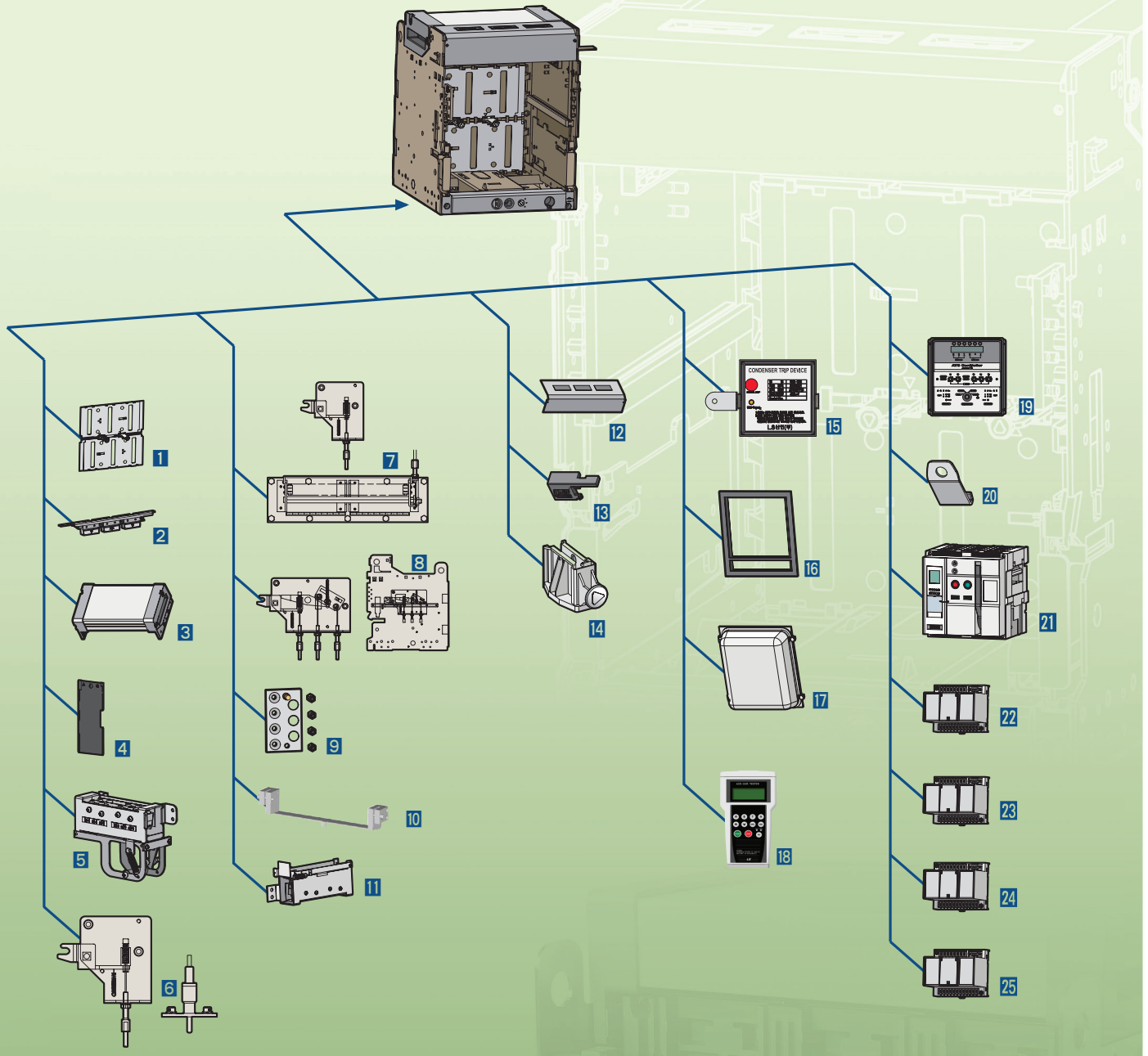

Cradle

1 Safety Shutter (ST)
2 Manual Connector
3 Zero Arc Space (ZAS)
4 Insulation Barrier (IB)
5 Cell Switch (CEL)
6 Door Interlock (DI)
7 MOC (Mechanical Operated Cell switch)
8 Mechanical Interlock (MI)
9 Miss Insertion Prevent Device (MIP)
10 Body Supporter (BSP)
11 Shorting "b" Contact (SBC)
12 Safety Control Cover (SC)
13 Racking Interlock (RI)
14 Safety Shutter Lock (STL)

Other

15 Condenser Trip Device (CTD)
16 Door Frame (DF)
17 Dust Cover (DC)
18 OCR Tester (OT)
19 ATS Controller (ATS)
20 Lifting Hook (LH)
21 Dummy ACB
22 UVT Time Delay Controller (UDC)
23 Profibus-DP Communication module
24 Remote I/O
25 Temperature Alarm

Connection and Installation



Diverisified terminal connection methods of the ACB main circuit for users.

Multiple connections

Various installation methods

Standard connection

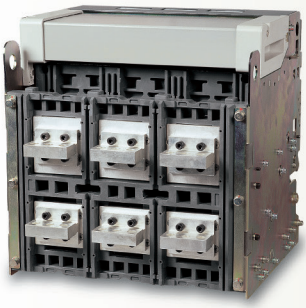

Horizontal type

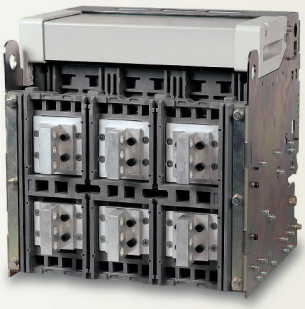

Vertical type



Front type

Mixed connection



Horizontal / Vertical type



Vertical / Horizontal type

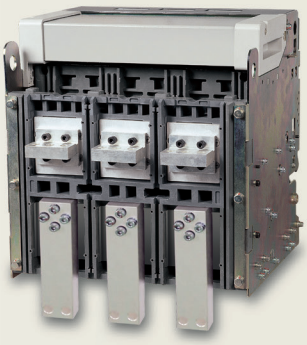

Horizontal / Front type



Vertical / Front type



Front / Horizontal type

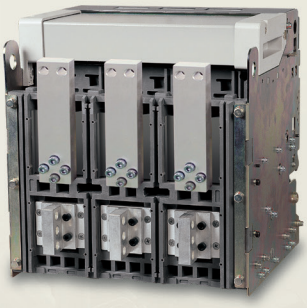

Front / Vertical type

- The Front connection type is suitable for the panel that demands narrow depth for stallation.
- The connection can be modified between vertical type and horizontal type by rotating the terminals through 90 degrees for the breakers such as AN−06~16D, AS−20E~32E, AH−06D~20D, AH−06E~32E.

  Note: AS-20D, AH-20D, AS-40E, AH-40E types are equipped with vertical-only terminals.

- Please refer to the rating lists (Page 34~37) because the installation method is various according to the rated current.

External configuration

Susol · Metasol

Fixed type ACB



Draw-out ACB (Cradle)

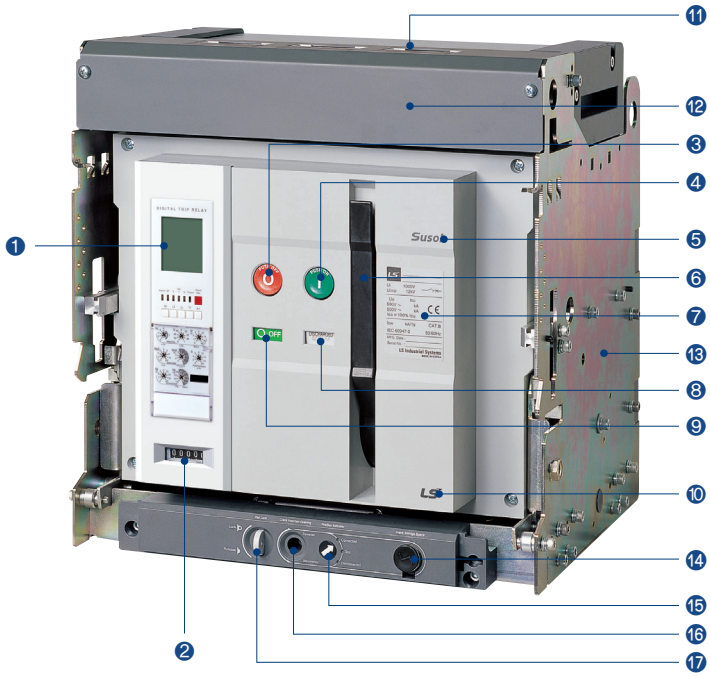

Terms

1. Trip relay
2. Counter
3. OFF button
4. ON button
5. Series name
6. Charge handle
7. Rated name plate
8. Charge/Discharge indicator
9. ON/OFF indicator
10. Corporation logo
11. Arc cover (Zero Arc Space)
12. Safety control cover
13. Cradle
14. Draw-out handle
15. Position indicator
16. Handle inserting hole
17. Pad lock button
18. Arc chute
19. Front cover
20. Fixed type bracket

Cradle (Internal)

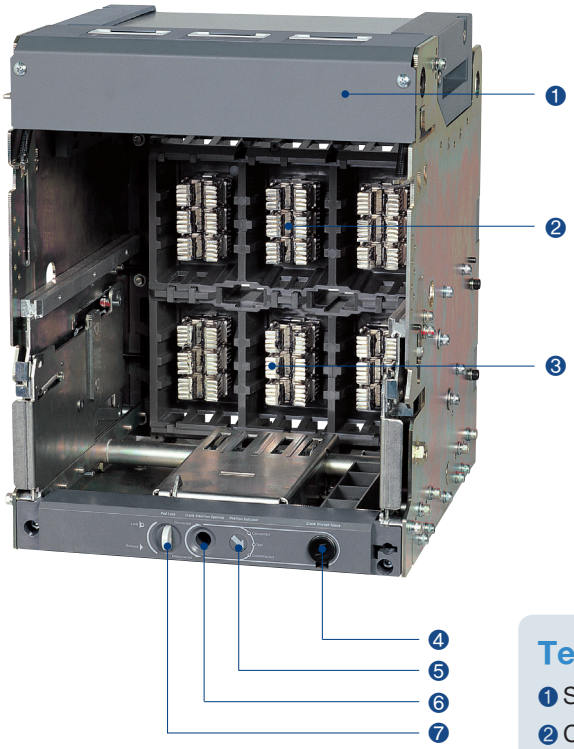

Cradle (Rear)

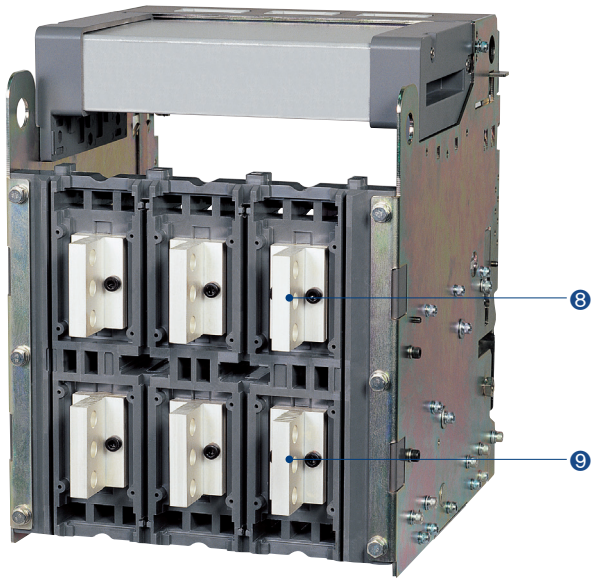

Terms

1. Safety control cover
2. Cradle finger
3. Cradle finger
4. Draw-out handle
5. Position indicator
6. Handle inserting hole
7. Pad lock button
8. Connecting terminal
9. Connecting terminal

Rated name plate

[Acronym explanation]

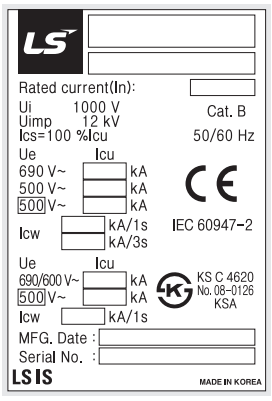

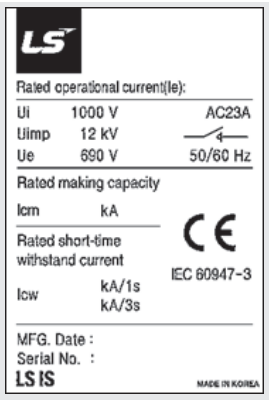

- Ui: Rated insulation voltage
- Uimp: Impulse withstand voltage
- Ue: Rated operational voltage (AC base)
- Icu: Ultimate breaking capacity
- Ics: Service breaking capacity
- Icw: Short time withstand capacity
- MFG. Date: Manufacturing date
- Icm: Rated making capacity

[Secondary nameplate]

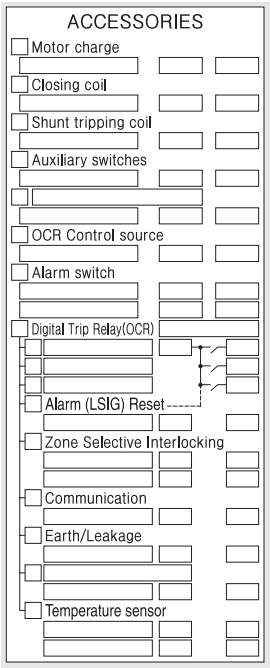

Explanation of terminologies

- Motor charge
- Closing coil
- Shunt tripping coil

Control power and terminal No.

- Auxiliary switches: Contact specification and terminal No.
- Under voltage trip: UVT terminal No.
- OCR control source: Trip relay control power
- Alarm switch: Alarm and terminal No.
- Digital trip relay: Switching diagram
- Z.S.I: Input/Output terminal No.
- Reset: LED/LCD reset
- Communication: Communication and terminal No.
- Voltage module: Phase voltage and symbol
- Earth/Leakage: Ground fault / Earth leakage input terminal No.

Internal configuration

Susol · Metasol

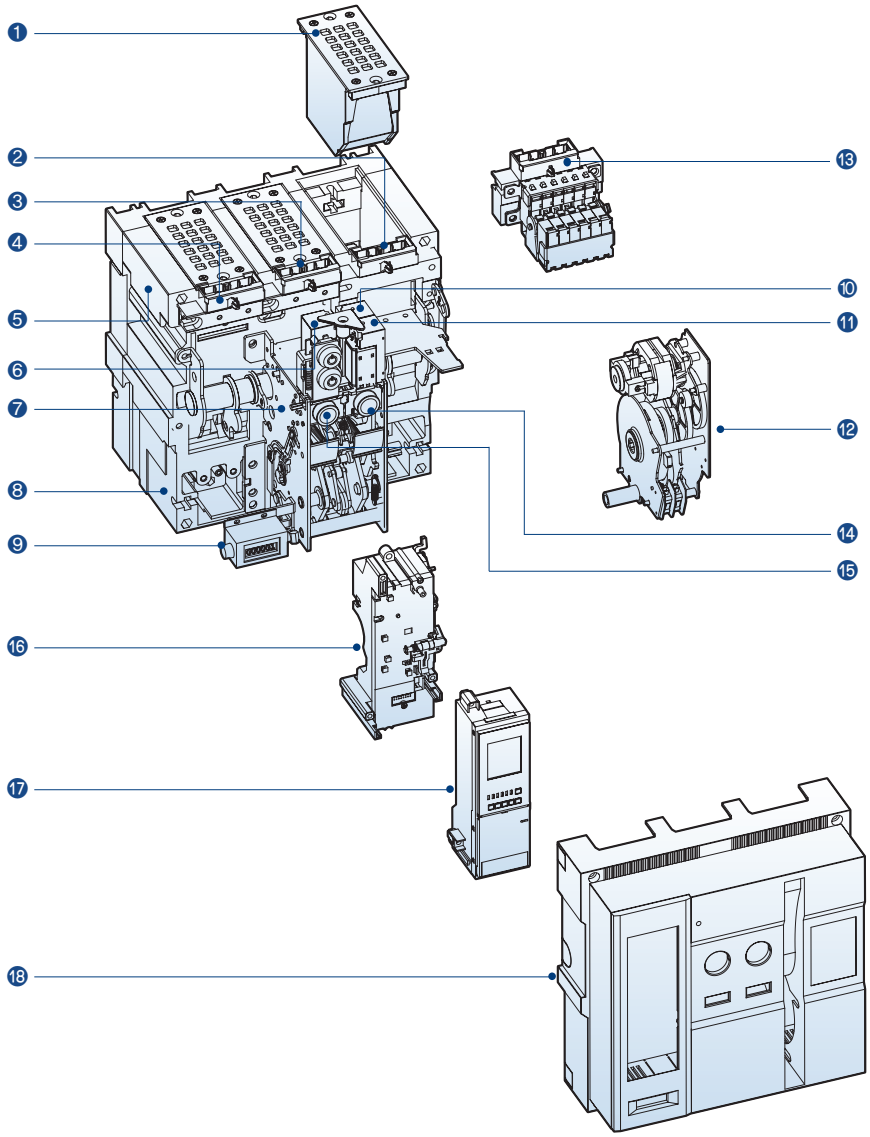

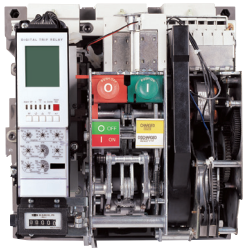

Terms

1. Arc chute
2. Aux. switch control terminal
3. Control power supply terminal
4. Trip relay control terminal
5. Carrying grip
6. Shunt coil
7. Mechanism
8. Main body
9. Counter
10. Shunt coil
11. Closing coil
12. Motor Ass'y
13. Aux. switch
14. ON button
15. OFF button
16. MTD base
17. Trip relay
18. Front cover

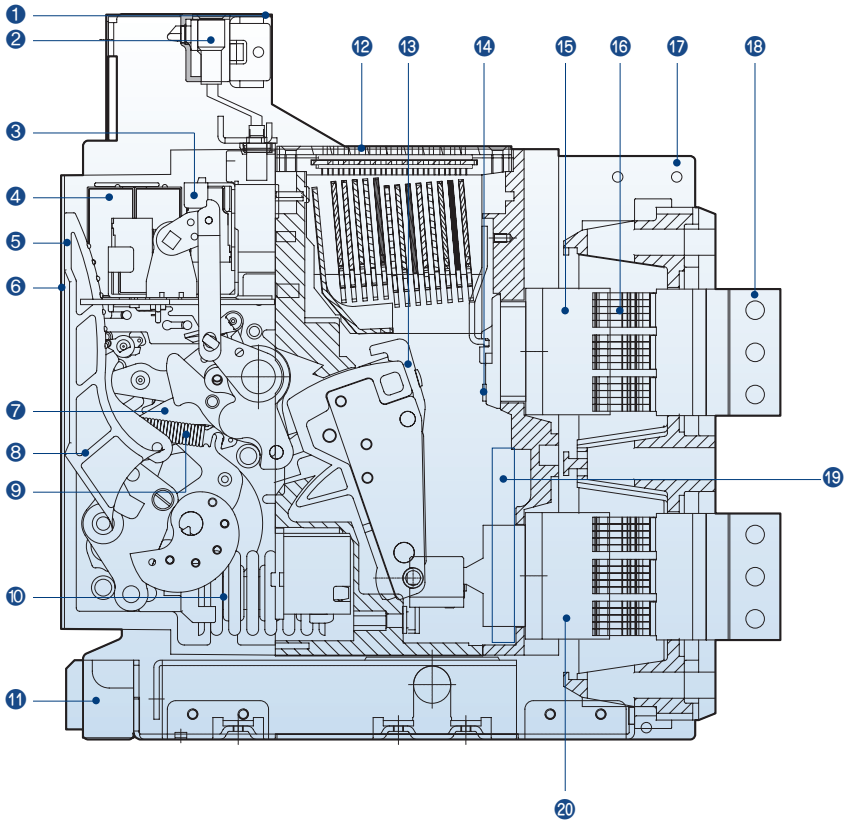

Terms

1. Control circuit terminal block
2. Control terminal
3. Auxiliary switches
4. Closing, Shunt, UVT coil
5. Trip relay
6. Front cover
7. Mechanism
8. Charge handle
9. Trip spring
10. Closing spring
11. Draw-in/out device
12. Arc chute
13. Moving contact
14. Fixed contact
15. Terminal on line side
16. Cradle finger
17. Cradle
18. Connecting terminal
19. Power supply CT
20. Terminal on load side

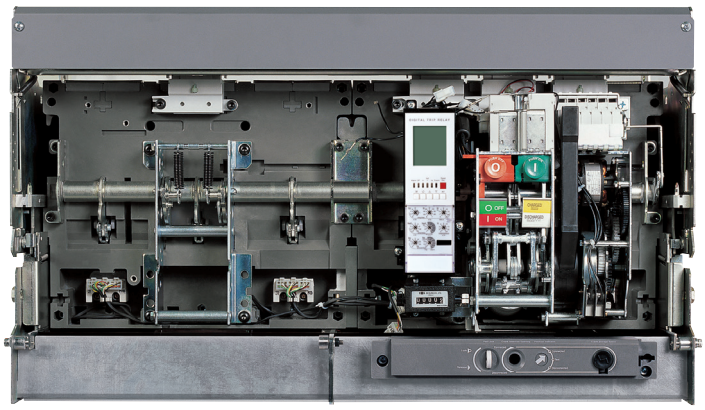

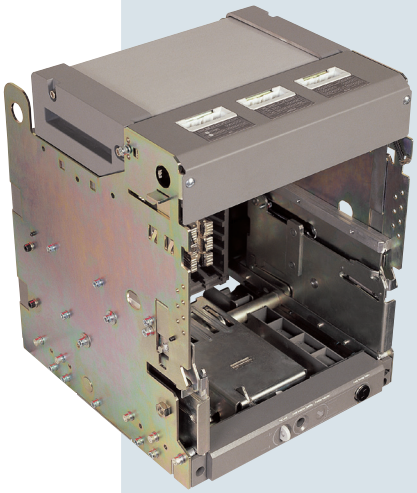

ACB & Accessories

AH — **10** **D** **3** — **10** **A**

Type	
Circuit Breakers	
AH	
Switch Disconnector	
DH	



Ampere * Frame	
06	630AF
08	800AF
10	1000AF
13	1250AF
16	1600AF
20	2000AF

Frame sizes & phase array	
D	630~2000AF 3P/4P Standard RST(N)
W	630~2000AF 4P Reverse phase type (N)RST

No. of pole	
3	3P(D)
4	4P(D, W)

Rated current (CT Spec.)	
00	Without OCR & CT
02	200A
04	400A
06	630A
08	800A
10	1000A
13	1250A
16	1600A
20	2000A

Connections	
Draw-out type	
A	Automatic connection
Fixed type	
H	Horizontal type
V	Vertical type
M	Mixed type Horizontal Vertical
N	Mixed type Vertical Horizontal
P	Front type

* 2000AF only offers with vertical type mounting terminals (Busbar).



06	630AF
08	800AF
10	1000AF
13	1250AF
16	1600AF
20	2000AF
25	2500AF
32	3200AF
40	4000AF

E	630~4000AF 3P/4P Standard RST(N)
X	630~4000AF 4P Reverse phase type (N)RST

3	3P(E)
4	4P(E, X)

06	630A
08	800A
10	1000A
13	1250A
16	1600A
20	2000A
25	2500A
32	3200A
40	4000A

* 4000AF only offers with vertical type mounting terminals (Busbar).



40	4000AF
50	5000AF
63	6300AF

G	4000/5000/6300AF 3P/4P Standard RST(N)
Z	4000/5000/6300AF 4P Reverse phase type (N)RST

3	3P(G)
4	4P(G, Z)

40	4000A
50	5000A
63	6300A

* Please, refer to cradle installation instruction for draw-in/out types. (p.119-124)

Note) 1. AH-20D, AH-40E types are equipped with vertical-only terminals.
In case of F/Y/G/Z Frame size, front type & mixed type connection is not available.
2. In case of DH type Switch Disconnector, the rated current (CT Spec.) will be applied 00 (without OCR & CT)
3. For the busbar installation method of draw-out type, please refer to the connection type of cradle which describes in page 20

AT — **20** **D** **3** — **00** **U**

Earthing product

20	2000AF
40	4000AF

D	RST(N)
W	Reverse NRST
E	RST(N)
X	Reverse NRST

3	3P
4	4P

U	Line earthed system
L	Load earthed system

* Rated short-circuit withstand current of the protective circuit in earthing product : 60kA/1s

* Please contact us to get more detail information of earthing product.

M1 D1 D1 AX NG0 U1 AL

Motor rated voltage

MA	Without Motor
M1	AC/DC 100V~130V
M2	AC/DC 200V~250V
M3	DC 125V
M4	DC 24V~30V
M5	DC 48V~60V
M6	AC 380V~415V
M7	AC 440V~480V
M8	AC 48V

Shunt coil rated voltage

D0	Without Shunt coil
D1	AC/DC 100V~130V
D2	AC/DC 200V~250V
D3	DC 125V
D4	DC 24V~30V
D5	DC 48V~60V
D6	AC 380V~480V
D7	AC 48V

Trip relay

Refer to 42page

Closing coil rated voltage

D0	Without Closing coil
D1	AC/DC 100V~130V
D2	AC/DC 200V~250V
D3	DC 125V
D4	DC 24V~30V
D5	DC 48V~60V
D6	AC 380V~480V
D7	AC 48V

Aux.contact & charging types

AX	Standard OFF-Charge 3a3b
AC	Standard ON-Charge 3a3b
BX	Standard OFF-Charge 5a5b
BC	Standard ON-Charge 5a5b
HX	High capacity OFF-Charge 5a5b
HC	High capacity ON-Charge 5a5b
CC	Standard ON-Charge 6a6b
JC	High capacity ON-Charge 6a6b
GX	High capacity OFF-Charge 3a3b
GC	High capacity ON-Charge 3a3b
TX	TCS OFF-Charge 4a4b Note)
TC	TCS ON-Charge 5a5b Note)

Note) TCS (Trip Circuit Supervision):
The terminal supervising trip circuit and monitoring disconnection or disable of trip.

UVT coil rated voltage

U0	Without UVT coil
U1	AC/DC 100V~130V
U2	AC/DC 200V~250V
U3	DC 125V
U4	DC 24V~30V
U5	DC 48V~60V
U6	AC 380V~480V
U7	AC 48V

* UVT Delay module is available over AC / DC 48V

Option	Type name		Option	Type name		
AL	AL1+MRB		B	B	On/Off Button lock	
A1	AL1+MRB+RES (AC110~130V) *AC private use		M	MI	Mechanical interlock	
A2	AL1+AL2+MRB		D	DI or MOC	Door Interlock or MOC	
A3	AL1+MRB+RES (DC110~125V) *DC private use				(Mechanism operated cell switch)	
A4	AL1+MRB+RES (AC200~250V) *AC private use		K	K1	Key lock	
A5	AL1+MRB+Auto reset		K2	K2	Key Interlock set	
A6	AL1+AL2+MRB+Auto reset		K3	K3	Key lock double	
A7	AL1+MRB+RES (DC110~125V)+Auto reset *DC private use		R	RCS	Ready to close switch	
A8	AL1+MRB+RES (AC200~250V)+Auto reset *AC private use		T	TM	Temperature monitoring	
A9	AL1+MRB+RES (AC110~130V)+Auto reset *AC private use		H1	SHT2	AC/DC 100~130V	Double shunt coil **At using UVT, not applied
Y2	AL1+AL2+MRB (2b contact)		H2		AC/DC 200~250V	
Y6	AL1+AL2+MRB+Auto reset (2b contact)		H3		DC 125V	
Z2	AL1+AL2+MRB (1a1b contact)		H4 1)		DC 24~30V	
Z6	AL1+AL2+MRB+Auto reset (1a1b contact)		H5		DC 48~60V	
C	C	Counter	H6		AC 380~480V	
S	CS2	Charge switch communication	H7		AC 48V	

Note) 1. UVT and SHT2 are alternative.
2. Other accessories should be ordered seperately.

Ordering

Metasol

ACB & Accessories

AS — **10** **D** **3** — **10** **J**

Type
Circuit Breakers
AN
AS
Switch Disconnector
DN
DS



	Ampere * Frame	
AN/AS	06	630AF
	08	800AF
	10	1000AF
	13	1250AF
	16	1600AF
AS	20	2000AF

* 2000AF only offers with vertical type mounting terminals (Busbar).

Frame sizes & phase array	
D	630~2000AF 3P/4P Standard RST(N)
W	630~2000AF 4P Reverse phase type (N)RST

No. of pole	
3	3P(D)
4	4P(D, W)

Rated current ** (CT Spec.)	
00	Without OCR & CT
02	200A
04	400A
06	630A
08	800A
10	1000A
13	1250A
16	1600A
20	2000A

Connections	
Draw-out type ***	
J	Manual connection
A	Automatic connection
Fixed type	
H	Horizontal type
V	Vertical type
M	Mixed type Horizontal Vertical
N	Mixed type Vertical Horizontal
P	Front type



AS	20	2000AF
	25	2500AF
	32	3200AF
	40	4000AF

E	2000~4000AF 3P/4P Standard RST(N)
X	2000~4000AF 4P Reverse phase type (N)RST

3	3P(E)
4	4P(E, X)

06	630A
08	800A
10	1000A
13	1250A
16	1600A
20	2000A
25	2500A
32	3200A
40	4000A

* 4000AF only offers with vertical type mounting terminals (Busbar).



AS	40	4000AF
	50	5000AF

F	4000/5000AF 3P/4P Standard RST(N)
Y	4000/5000AF 4P Reverse phase type (N)RST

3	3P(F)
4	4P(F, Y)

40	4000A
50	5000A



AS	40	4000AF
	50	5000AF
	63	6300AF

G	4000/5000/6300AF 3P/4P Standard RST(N)
Z	4000/5000/6300AF 4P Reverse phase type (N)RST

3	3P(G)
4	4P(G, Z)

40	4000A
50	5000A
63	6300A

* AN type: 630~1600AF
AS type: 630~2000AF, 2000~4000AF, 4000~5000AF, 4000~6300AF
** AN type offers rated current of 1600A when choosing 630~1600AF
*** Please, refer to cradle installation instruction for draw-in/out types. (p.119~124)

Note) 1. AS-20D, AS-40E types are equipped with vertical-only terminals.
In case of F/Y/G/Z Frame size, front type & mixed type connection is not available.
2. In case of DN/DS type Switch Disconnector, the rated current (CT Spec.) will be applied 00 (without OCR & CT)
3. For the busbar installation method of draw-out type, please refer to the connection type of cradle which describes in page 20

AT — **20** **D** **3** — **00** **U**

Earthing product

20	2000AF
40	4000AF

D	RST(N)
W	Reverse NRST
E	RST(N)
X	Reverse NRST

3	3P
4	4P

U	Line earthed system
L	Load earthed system

* Rated short-circuit withstand current of the protective circuit in earthing product : 60kA/1s

* Please contact us to get more detail information of earthing product.

M1 D1 D1 AX NG0 U1 AL

Motor rated voltage

MA	Without Motor
M1	AC/DC 100V~130V
M2	AC/DC 200V~250V
M3	DC 125V
M4	DC 24V~30V
M5	DC 48V~60V
M6	AC 380V~415V
M7	AC 440V~480V
M8	AC 48V

Shunt coil rated voltage

D0	Without Shunt coil
D1	AC/DC 100V~130V
D2	AC/DC 200V~250V
D3	DC 125V
D4	DC 24V~30V
D5	DC 48V~60V
D6	AC 380V~480V
D7	AC 48V

Trip relay

Refer to 42page

Closing coil rated voltage

D0	Without Closing coil
D1	AC/DC 100V~130V
D2	AC/DC 200V~250V
D3	DC 125V
D4	DC 24V~30V
D5	DC 48V~60V
D6	AC 380V~480V
D7	AC 48V

Aux.contact & charging types

AX	Standard OFF-Charge 3a3b
AC	Standard ON-Charge 3a3b
BX	Standard OFF-Charge 5a5b
BC	Standard ON-Charge 5a5b
HX	High capacity OFF-Charge 5a5b
HC	High capacity ON-Charge 5a5b
CC 3)	Standard ON-Charge 6a6b
JC	High capacity ON-Charge 6a6b
GX	High capacity OFF-Charge 3a3b
GC	High capacity ON-Charge 3a3b
TX	TCS OFF-Charge 4a4b Note)
TC	TCS ON-Charge 5a5b Note)

Note) TCS (Trip Circuit Supervision):
The terminal supervising trip circuit and monitoring disconnection or disable of trip.

UVT coil rated voltage

U0	Without UVT coil
U1	AC/DC 100V~130V
U2	AC/DC 200V~250V
U3	DC 125V
U4	DC 24V~30V
U5	DC 48V~60V
U6	AC 380V~480V
U7	AC 48V

* UVT Delay module is available over AC / DC 48V

Option	Type name		Option	Type name		
AL	AL1+MRB		B	B	On/Off Button lock	
A1	AL1+MRB+RES (AC110~130V) *AC private use		M	MI	Mechanical interlock	
A2	AL1+AL2+MRB		D	DI or MOC	Door Interlock or MOC	
A3	AL1+MRB+RES (DC110~125V) *DC private use				(Mechanism operated cell switch)	
A4	AL1+MRB+RES (AC200~250V) *AC private use		K	K1	Key lock	
A5	AL1+MRB+Auto reset		K2	K2	Key Interlock set	
A6	AL1+AL2+MRB+Auto reset		K3	K3	Key lock double	
A7	AL1+MRB+RES (DC110~125V)+Auto reset *DC private use		R 2)	RCS	Ready to close switch	
A8	AL1+MRB+RES (AC200~250V)+Auto reset *AC private use		T 3)	TM	Temperature monitoring	
A9	AL1+MRB+RES (AC110~130V)+Auto reset *AC private use		H1	SHT2	AC/DC 100~130V	Double shunt coil **At using UVT, not applied
Y2	AL1+AL2+MRB (2b contact)		H2		AC/DC 200~250V	
Y6	AL1+AL2+MRB+Auto reset (2b contact)		H3		DC 125V	
Z2	AL1+AL2+MRB (1a1b contact)		H4 1)		DC 24~30V	
Z6	AL1+AL2+MRB+Auto reset (1a1b contact)		H5		DC 48~60V	
C	C	Counter	H6		AC 380~480V	
S 2)	CS2	Charge switch communication	H7		AC 48V	

Note) 1. UVT and SHT2 are alternative.
2. CS2 and RCS are alternative.
3. TM and CC/JC(6a6b) are alternative.
4. Other accessories should be ordered seperately.

Ordering

Susol

Cradle

AL — H16D | 3 — A | H | E | S

Susol ACB cradle

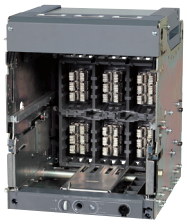

Rated current & frame

H06~16D	AH-06~16D
H20D	AH-20D
H06~32E	AH-06~32E
H40E	AH-40E
H40~50G	AH-40~50G
H63G	AH-63G

No. of pole

3	3P
4	4P

Terminal connections

A	Automatic Connection
J	Manual connection

Connections

H	Horizontal type (20D inapplicable)
V	Vertical type
M	Mixed type Line: Horizontal Load: Vertical (20D inapplicable)
N	Mixed type Line: Vertical Load: Horizontal (20D inapplicable)
P	Front type (20D, 40E, 50FG, 63G inapplicable)

Safety shutter

E	Without safety shutter
F	With safety shutter

Arc cover (Zero Arc Space)

S	With Note) Arc cover

Note) 1. AH Series: S(with Arc cover) only.
2. AH-20D, AH-40E types are equipped with vertical-only terminals.

AL — N16D 3 — J H E N

Metasol ACB cradle

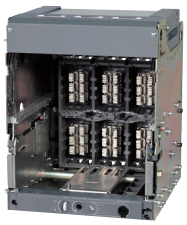

Rated current & frame	
N06~16D	AN-06~16D
S06~16D	AS-06~16D
S20D	AS-20D
S20~25E	AS-20~25E
S32E	AS-32E
S40E	AS-40E
S40~50F	AS-40~50F
S40~50G	AS-40~50G
S63G	AS-63G

No. of pole	
3	3P
4	4P

Terminal connections	
J	Manual connection
A	Automatic Connection

Connections	
H	Horizontal type (20D inapplicable)
V	Vertical type
M	Mixed type Line: Horizontal Load: Vertical (20D inapplicable)
N	Mixed type Line: Vertical Load: Horizontal (20D inapplicable)
P	Front type (20D, 40E, 50FG, 63G inapplicable)

Safety shutter	
E	Without safety shutter
F	With safety shutter

Arc cover (Zero Arc Space)	
N	Without Arc cover
S	With Arc cover

Note) AS-20D, AS-40E types are equipped with vertical-only terminals.

Ordering

Susol

Trip relay



N	G	0
Trip relay type	Communication & protection	Control voltage & frequency

N	
000	Without trip relay
N	Normal

G	
G	Ground fault

* L/S/I/G configuration as standard
  - with LED indicators
  - without output contacts
* Ground fault system by vector sum

0		
0	Self-Power Note1)	60Hz
5	Self-Power Note1)	50Hz



A	
A	Ammeter

G	
G	Ground fault
Z	Earth Leakage(External CT, Earth Leakage below 30A)
E	Earth Leakage(External CT, Earth Leakage over 30A)
C	Ground fault + Comm.
K	Earth Leakage(External CT, Earth Leakage below 30A) + Comm.
X	Earth Leakage(External CT, Earth Leakage over 30A) + Comm.
N **	Ground fault (External NCT) + Comm.

* L/S/I/G(or EL) configuration as standard
  (Only. Unable to select ground fault and earth leakage, simultaneously)
* Ground fault system by vector sum(G,C)
* Earth leakage system
  - Z,K: External CT - LS ZCT applied(fault current 0.5~30A, 1600AF)
  - E,X: External CT - Private ZCT applied(faullt current >30A)
* Comm. And output contacts DO NOT work under self-power condition.
  (Only checking LED available)

0		
0	Self-Power	60Hz
1	AC/DC 100V~250V	60Hz
2	DC 15V~60V	60Hz
5	Self-Power	50Hz
6	AC/DC 100V~250V	50Hz
7	DC 15V~60V	50Hz



P	
P	Power meter

C	
C	Ground fault + Comm.
K	Earth Leakage(External CT, Earth Leakage below 30A) + Comm.
X	Earth Leakage(External CT, Earth Leakage over 30A) + Comm.
A	Pre-Trip Alram + Comm.
N **	Ground fault (External NCT) + Comm.

* L/S/I/G(or EL) configuration as standard
  (Only. Unable to select ground fault and earth leakage, simultaneously)
* Ground fault system by vector sum
* Earth leakage system
  - K: External CT - LS ZCT applied(fault current 0.5~30A, 1600AF)
  - X: External CT - Private ZCT applied(faullt current >30A)
* Applicable to generator protection purpose
* Comm. And output contacts DO NOT work under self-power condition.
  (Only checking LED available)

1		
1	AC/DC 100V~250V	60Hz
2	DC 15V~60V	60Hz
6	AC/DC 100V~250V	50Hz
7	DC 15V~60V	50Hz



S	
S	Supreme meter

C	
C	Ground fault + Comm.
K	Earth Leakag(External CT, Earth Leakage below 30A) + Comm.
X	Earth Leakag(External CT, Earth Leakage over 30A) + Comm.
A	Pre-Trip Alram + Comm.
N	Ground fault (External NCT) + Comm.

* L/S/I/G(or EL) configuration as standard
  (Only. Unable to select ground fault and earth leakage, simultaneously)
* Ground fault system by vector sum
* Earth leakage system
  - K: External CT - LS ZCT applied(fault current 0.5~30A, 1600AF)
  - X: External CT - Private ZCT applied(faullt current >30A)
* Applicable to generator protection purpose
* Comm. And output contacts DO NOT work under self-power condition.
  (Only checking LED available)

1		
1	AC/DC 100V~250V	60Hz
2	DC 15V~60V	60Hz
6	AC/DC 100V~250V	50Hz
7	DC 15V~60V	50Hz

** AN, PN, SN provide the function to detect and protect the ground fault current by applying the NCT (Neutral CT) in the neutral wire when 3pole circuit breaker is used in 3-phase 4-wire system. Please use NCT with the secondary output of 5A rating. (NCT is not provided)

Note) 1. L/S/I/G(or EL) configuration as standard (Only. Unable to select ground fault and earth leakage, simultaneously)
2. Ground fault, earth leakage and pre-trip alarm functions are alternative.
3. The functions like Metering, Communication, ZSI, Remote reset and Digital output are NOT available only under Self-power condition.
4. Voltage module should be required for P and S types purchased separately







N	G	0
Trip relay type	Communication & protection	Control voltage & frequency

N — Trip relay type

000	Without trip relay
N	Normal

G — Communication & protection

G	Ground fault

* L/S/I/G configuration as standard
  - with LED indicators
  - without output contacts
* Ground fault system by vector sum

0 — Control voltage & frequency

0	Self-Power Note1)	60Hz
5	Self-Power Note1)	50Hz

A — Trip relay type

A	Ammeter

G — Communication & protection

G	Ground fault
Z	Earth Leakage(External CT, Earth Leakage below 30A)
E	Earth Leakage(External CT, Earth Leakage over 30A)
C	Ground fault + Comm.
K	Earth Leakage(External CT, Earth Leakage below 30A) + Comm.
X	Earth Leakage(External CT, Earth Leakage over 30A) + Comm.
N**	Ground fault(External NCT) + Comm.

* L/S/I/G(or EL) configuration as standard
  (Only. Unable to select ground fault and earth leakage, simultaneously)
* Ground fault system by vector sum(G,C)
* Earth leakage system
  - Z,K: External CT - LS ZCT applied(fault current 0.5~30A, 1600AF)
  - E,X: External CT - Private ZCT applied(faullt current >30A)
* Comm. And output contacts DO NOT work under self-power condition.
  (Only checking LED available)

0 — Control voltage & frequency

0	Self-Power	60Hz
1	AC/DC 100V~250V	60Hz
2	DC 15V~60V	60Hz
5	Self-Power	50Hz
6	AC/DC 100V~250V	50Hz
7	DC 15V~60V	50Hz

P — Trip relay type

P	Power meter

C — Communication & protection

C	Ground fault + Comm.
K	Earth Leakage(External CT, Earth Leakage below 30A) + Comm.
X	Earth Leakage(External CT, Earth Leakage over 30A) + Comm.
A	Pre-Trip Alram + Comm.
N**	Ground fault(External NCT) + Comm.

* L/S/I/G(or EL) configuration as standard
  (Only. Unable to select ground fault and earth leakage, simultaneously)
* Ground fault system by vector sum
* Earth leakage system
  - K: External CT - LS ZCT applied(fault current 0.5~30A, 1600AF)
  - X: External CT - Private ZCT applied(faullt current >30A)
* Applicable to generator protection purpose
* Comm. And output contacts DO NOT work under self-power condition.
  (Only checking LED available)

0 — Control voltage & frequency

1	AC/DC 100V~250V	60Hz
2	DC 15V~60V	60Hz
6	AC/DC 100V~250V	50Hz
7	DC 15V~60V	50Hz

** AN, PN provide the function to detect and protect the ground fault current by applying the NCT (Neutral CT) in the neutral wire when 3pole circuit breaker is used in 3-phase 4-wire system. Please use NCT with the secondary output of 5A rating. (NCT is not provided)

Note) 1. L/S/I/G(or EL) configuration as standard (Only. Unable to select ground fault and earth leakage, simultaneously)
2. Ground fault, earth leakage and pre-trip alarm functions are alternative.
3. The functions like Metering, Communication, ZSI, Remote reset and Digital output are NOT available only under Self-power condition.
4. Voltage module should be required for P types purchased separately

Ratings

Susol

Circuit Breaker



				Susol					
Type				AH-06D	AH-08D	AH-10D	AH-13D	AH-16D	AH-20D
Ampere frame	(AF)			630	800	1000	1250	1600	2000
Rated current(A)	(In max)		at 40℃	200 400 630	400 630 800	1000	1250	1600	2000
Setting current (A) *	Control trip relay (... × In max)			0.4 ~ 1.0					
Rated current of neutral pole (A)				400 630	400 630 800	1000	1250	1600	2000
Rated insulation voltage(V)	(Ui)			1,000					
Rated operational voltage(V)	(Ue)			690					
Rated impulse withstand voltage (kV)	(Uimp)			12					
Frequency(Hz)				50/60					
Number of poles (P)				3/4					
Rated breaking capacity (kA sym) AC 50/60Hz	(Icu)	IEC 60947-2 KS C 4620	220V/230V/380V/415V	85					
			460V/480V/500V	85					
			550V/600V/690V	65					
Rated service breaking capacity (kA)	(Ics)		... %×Icu	100%					
Rated making capacity (kA peak) AC 50/60Hz	(Icm)	IEC 60947-2 KS C 4620	220V/230V/380V/415V	187					
			460V/480V/500V	187					
			550V/600V/690V	143					
Rated short-time withstand current (kA)	(Icw)		1 sec	65					
			2 sec	60					
			3 sec	50					
Operating time (ms)			Maximum total breaking time	40					
			Maximum closing time	80					
Life cycle (time)		Mechanical		20,000					
		Electrical		5,000					
Connections **	Draw-out / Fixed		Horizontal connection	●					-
			Vertical connection	○					●
			Front connection	○					-
			Mixed connection	○					-
Weight (kg) (3P/4P)	Draw-out type	Main body (With cradle)	Motor charging type	63/74					70/85
			Manual charging type	61/72					68/83
		Cradle only		29/32					33/40
	Fixed type		Motor charging type	34/44					38/47
			Manual charging type	32/42					36/45
External dimensions (mm) (H×W×D) 		Draw-out type	3P	430×334×375					
			4P	430×419×375					
		Fixed type	3P	300×300×295					
			4P	300×385×295					
Trip relay				N, A, P, S type					
Certificate & Approval				KS / KEMA / KERI / GOST / CCC					
Marine clasiflcation				LR, ABS, DNV, KR, BV, GL, RINA, NK					

* Refer to trip relay specification. ** ●: Standard, ○: Option

Note) 1. Life time means not guarantee, but limitation.
Quality guarantee: On/Off frequency on the basis of IEC60947-2 within the term of guarantee
2. In case of Marine ACB, please contact us.
3. The use of AN-D, AS-D, AH-D and AS-F in IT systems is limited to 500 V network voltage.
4. AH-20D, AH-40E types are equipped with vertical-only terminals.





Susol								
AH-06E	AH-08E	AH-10E	AH-13E	AH-16E	AH-20E	AH-25E	AH-32E	AH-40E
630	800	1000	1250	1600	2000	2500	3200	4000
630	800	1000	1250	1600	2000	2500	3200	4000
0.4 ~ 1.0								
630	800	1000	1250	1600	2000	2500	3200	4000
1,000								
690								
12								
50/60								
3/4								
100								
100								
85								
100%								
220								
220								
187								
85								
75								
65								
40								
80								
15,000								
5,000								
●								-
○								●
○								-
○								-
87/103								107/139
85/101								102/145
44/55								65/85
44/55								61/81
42/53								60/80
430×412×375								
430×527×375								
300×378×295								
300×493×295								
N, A, P, S type								
KS / KEMA / KERI / GOST / CCC								
LR, ABS, DNV, KR, BV, GL, RINA, NK								

Susol		
AH-40G	AH-50G	AH-63G
4000	5000	6300
4000	5000	6300
0.4 ~ 1.0		
4000	5000	6300
1,000		
690		
12		
50/60		
3/4		
150		
150		
100		
100%		
330		
330		
220		
100		
85		
75		
40		
80		
10,000		
2,000		
○		
●		
-		
-		
181/223		186/230
179/221		184/228
97/117		102/124
98/123		103/130
96/121		101/128
460×785×375		
460×1015×375		
300×751×295		
300×981×295		
N, A, P, S type		
KS / KEMA / KERI / GOST / CCC		
LR, ABS, DNV, KR, BV, GL, RINA, NK		

※ Derating of the rated current is required according to the ambient temperature around the breaker in a panel if it is higher than the reference value. (See pages 123 to 126)
※ It is possible to connect power and load side reversely, but please use it for normal connection for maintenance and safety.

Ratings

Susol

Switch-Disconnector



Type				Susol					
				DH-06D	DH-08D	DH-10D	DH-13D	DH-16D	DH-20D
Ampere frame	(AF)			630	800	1000	1250	1600	2000
Rated current(A)	(In max)		at 40℃	200 400 630	400 630 800	1000	1250	1600	2000
Setting current (A) *	Control trip relay (... × In max)			0.4 ~ 1.0					
Rated current of neutral pole (A)				400 630	400 630 800	1000	1250	1600	2000
Rated insulation voltage(V)	(Ui)			1,000					
Rated operational voltage(V)	(Ue)			690					
Rated impulse withstand voltage (kV)	(Uimp)			12					
Frequency(Hz)				50/60					
Number of poles (P)				3/4					
Rated service breaking capacity (kA)	(Ics)		... %×Icu	100%					
Rated making capacity (kA peak)	(Icm)	IEC 60947-3 AC	~ 690 V	143					
Rated short-time withstand current (kA)	(Icw)		1 sec	65					
			2 sec	60					
			3 sec	50					
Operating time (ms)			Maximum total breaking time	40					
			Maximum closing time	80					
Life cycle (time)		Mechanical		20,000					
		Electrical		5,000					
Connections **	Draw-out / Fixed		Horizontal connection	●					-
			Vertical connection	○					●
			Front connection	○					-
			Mixed connection	○					-
Weight (kg) (3P/4P)	Draw-out type	Main body (With cradle)	Motor charging type	63/74					70/85
			Manual charging type	61/72					68/83
		Cradle only		29/32					33/40
	Fixed type		Motor charging type	34/44					38/47
			Manual charging type	32/42					36/45
External dimensions (mm) (H×W×D) 		Draw-out type	3P	430×334×375					
			4P	430×419×375					
		Fixed type	3P	300×300×295					
			4P	300×385×295					

* Refer to trip relay specification. ** ●: Standard, ○: Option

Note) 1. Life time means not guarantee, but limitation.
Quality guarantee: On/Off frequency on the basis of IEC60947-3 within the term of guarantee
2. In case of Marine ACB, please contact us.
3. DH-20D, DH-40E types are equipped with vertical-only terminals.



Susol								
DH-06E	DH-08E	DH-10E	DH-13E	DH-16E	DH-20E	DH-25E	DH-32E	DH-40E
630	800	1000	1250	1600	2000	2500	3200	4000
630	800	1000	1250	1600	2000	2500	3200	4000
0.4 ~ 1.0								
630	800	1000	1250	1600	2000	2500	3200	4000
1,000								
690								
12								
50/60								
3/4								
100%								
187								
85								
78								
65								
40								
80								
15,000								
5,000								
●								-
○								●
○								-
○								-
87/103								107/139
85/101								102/145
44/55								65/85
44/55								61/81
42/53								60/80
430×412×375								
430×527×375								
300×378×295								
300×493×295								

※ Derating of the rated current is required according to the ambient temperature around the breaker in a panel if it is higher than the reference value. (See pages 123 to 126)

Ratings

Metasol

Circuit Breaker



				Metasol				
Type				AN-06D	AN-08D	AN-10D	AN-13D	AN-16D
Ampere frame	(AF)			630	800	1000	1250	1600
Rated current (A)	(In max)		at 40℃	200 400 630	400 630 800	1000	1250	1600
Setting current (A)*	Control trip relay (... × In max)			0.4 ~ 1.0				
Rated current of neutral pole (A)				400 630	400 630 800	1000	1250	1600
Rated insulation voltage (V)	(Ui)			1,000				
Rated operational voltage (V)	(Ue)			690				
Rated impulse withstand voltage (kV)	(Uimp)			12				
Frequency (Hz)				50/60				
Number of poles (P)				3/4				
Rated breaking capacity (kA sym) AC 50/60Hz	(Icu)	IEC 60947-2 KS C 4620	220V/230V/380V/415V	65				
			460V/480V/500V	65				
			550V/600V/690V	50				
Rated service breaking capacity (kA)	(Ics)		... %×Icu	100%				
Rated making capacity (kA peak) AC 50/60Hz	(Icm)	IEC 60947-2 KS C 4620	220V/230V/380V/415V	143				
			460V/480V/500V	143				
			550V/600V/690V	105				
Rated short-time withstand current (kA)	(Icw)		1 sec	50				
			2 sec	42				
			3 sec	36				
Operating time (ms)			Maximum total breaking time	40				
			Maximum closing time	80				
Life cycle (time)		Mechanical		20,000				
		Electrical		5,000				
Connections**	Draw-out / Fixed		Horizontal connection	●				
			Vertical connection	○				
			Front connection	○				
			Mixed connection	○				
Weight (kg) (3P/4P)	Draw-out type	Main body (With cradle)	Motor charging type	63/74				
			Manual charging type	61/72				
		Cradle only		29/32				
	Fixed type		Motor charging type	34/44				
			Manual charging type	32/42				
External dimensions (mm) (H×W×D) 		Draw-out type	3P	430×334×375				
			4P	430×419×375				
		Fixed type	3P	300×300×295				
			4P	300×385×295				
Trip relay				N, A, P type				
Certificate & Approval				KS / KEMA / KERI / GOST				
Marine clasiflcation				-				

* Refer to trip relay specification. ** ●: Standard, ○: Option

Note) 1. Life time means not guarantee, but limitation.
Quality guarantee: On/Off frequency on the basis of IEC60947-2 within the term of guarantee
2. The use of AN-D, AS-D and AS-F in IT systems is limited to 500 V network voltage.
3. AS-20D, AS-40E types are equipped with vertical-only terminals.

Metasol






Metasol						Metasol				Metasol		Metasol		
AS-06D	AS-08D	AS-10D	AS-13D	AS-16D	AS-20D	AS-20E	AS-25E	AS-32E	AS-40E	AS-40F	AS-50F	AS-40G	AS-50G	AS-63G
630	800	1000	1250	1600	2000	2000	2500	3200	4000	4000	5000	4000	5000	6300
200 400 630	400 630 800	1000	1250	1600	2000	630, 800 1000, 1250 1600, 2000	2500	3200	4000	4000	5000	4000	5000	6300
0.4 ~ 1.0						0.4 ~ 1.0				0.4 ~ 1.0		0.4 ~ 1.0		
630	800	1000	1250	1600	2000	630, 800 1000, 1250 1600, 2000	2500	3200	4000	4000	5000	4000	5000	6300
1,000						1,000				1,000		1,000		
690						690				690		690		
12						12				12		12		
50/60						50/60				50/60		50/60		
3/4						3/4				3/4		3/4		
70						85				100		120		
70						85				100		120		
65						85				85		100		
100%						100%				100%		100%		
154						187				220		264		
154						187				220		264		
143						187				187		220		
65						85				85		100		
50						75				75		85		
42						65				65		75		
40						40				40		40		
80						80				80		80		
20,000						15,000				10,000		10,000		
5,000						5,000				2,000		2,000		
●					-	●			-	○		○		
○					●	○			●	●		●		
○					-	○			-	-		-		
○					-	○			-	-		-		
63/74					70/85	87/103			104/147	107/139		181/223		186/230
61/72					63/83	85/101			102/145	102/145		179/221		184/228
29/32					33/40	44/50			58/70	65/85		97/117		102/124
34/44					38/47	44/55			63/100	61/81		98/123		103/130
32/42					36/45	42/53			61/98	60/80		96/121		101/128
430×334×375						430×412×375				460×629×375		460×785×375		
430×419×375						430×527×375				460×799×375		460×1015×375		
300×300×295						300×378×295				300×597×295		300×751×295		
300×385×295						300×493×295				300×767×295		300×981×295		
N, A, P type						N, A, P type				N, A, P type		N, A, P type		
KS / KEMA / KERI / GOST						KS / KEMA / KERI / GOST				KS / KEMA / KERI / GOST				
LR, ABS, DNV, KR, BV, GL, RINA, NK						LR, ABS, DNV, KR, BV, GL, RINA, NK				LR, ABS, DNV, KR, BV, GL, RINA, NK				

※ Derating of the rated current is required according to the ambient temperature around the breaker in a panel if it is higher than the reference value. (See pages 123 to 126)
※ It is possible to connect power and load side reversely, but please use it for normal connection for maintenance and safety.

Ratings

Metasol

Switch-Disconnector



				Metasol				
Type				DN-06D	DN-08D	DN-10D	DN-13D	DN-16D
Ampere frame	(AF)			630	800	1000	1250	1600
Rated current (A)	(In max)		at 40℃	200 400 630	400 630 800	1000	1250	1600
Setting current *	(A)	Control trip relay (... × In max)		0.4~1.0				
Rated current of neutral pole	(A)			630	800	1000	1250	1600
Rated insulation voltage (V)	(Ui)			1000				
Rated operational voltage (V)	(Ue)			690				
Rated impulse withstand voltage (kV)	(Uimp)			12				
Frequency	(Hz)			50/60				
Number of poles	(P)			3/4				
Rated service breaking capacity (kA)	(Ics)		... %×Icu	100%				
Rated making capacity (kA peak)	(Icm)	IEC 60947-3 AC	690V / 600V / 550V	105				
Rated short-time withstand current (kA)	(Icw)		1 sec	50				
			2 sec	42				
			3 sec	36				
Operating time (t)	(ms)		Total breaking time	40				
			Closing time	80				
Life cycle	(time)		Mechanical	20000				
			Electrical	5000				
Connections **	Draw-out type/ Fixed type		Horizontal connection	●	●	●	●	●
			Vertical connection	○	○	○	○	○
			Front connection	○	○	○	○	○
			Mixed connection	○	○	○	○	○
Weight (kg) (3P/4P)	Draw-out type	Main body (With cradle)	Motor charging type	63/74				
			Manual charging type	61/72				
		Cradle only		29/32				
	Fixed type		Motor charging type	34/44				
			Manual charging type	32/42				
External dimensions (mm) (H×W×D)		Draw-out type	3P	430×334×375				
			4P	430×419×375				
		Fixed type	3P	300×300×295				
			4P	300×385×295				

* Refer to trip relay specification. ** ●: Standard, ○: Option

Note) 1. Life time means not guarantee, but limitation.
Quality guarantee: On/Off frequency on the basis of IEC60947-3 within the term of guarantee
2. DS-20D, DS-40E types are equipped with vertical-only terminals.





Metasol					
DS-06D	DS-08D	DS-10D	DS-13D	DS-16D	DS-20D
630	800	1000	1250	1600	2000
200 400 630	400 630 800	1000	1250	1600	2000
0.4~1.0					
630	800	1000	1250	1600	2000
1000					
690					
12					
50/60					
3/4					
100%					
143					
65					
50					
42					
40					
80					
20000					
5000					
●	●	●	●	●	-
○	○	○	○	○	●
○	○	○	○	○	-
○	○	○	○	○	-
63/74					70/85
61/72					68/83
29/32					33/40
34/44					38/47
32/42					36/45
430×334×375					
430×419×375					
300×300×295					
300×385×295					

Metasol			
DS-20E	DS-25E	DS-32E	DS-40E
2000	2500	3200	4000
630, 800, 1000, 1250, 1600, 2000	2500	1000	1250
0.4~1.0			
630, 800, 1000, 1250, 1600, 2000	2500	3200	4000
1000			
690			
12			
50/60			
3/4			
100%			
187			
85			
75			
65			
40			
80			
15000			
5000			
●	●	●	-
○	○	○	●
○	○	○	-
○	○	○	-
87/103			107/139
85/101			102/145
44/50			65/85
44/55			61/81
42/53			60/80
430×412×375			
430×527×375			
300×378×295			
300×493×295			

※ Derating of the rated current is required according to the ambient temperature around the breaker in a panel if it is higher than the reference value. (See pages 123 to 126)

Trip relay(OCR)



The trip relay of Susol ACB provides the additional protection functions for voltage, frequency, unbalance, and others in addition to main protection functions for over current, short-circuit, ground fault. It supports the advanced measurement functions for voltage, current, power, electric energy, harmonics, communication function, and others.
Analog trip function interlocked with mechanism enhanced a durability of devices as well as the breaking capacity of ACB.
Zone selective interlocking function makes the protective coordination more simple and thermal memory can be applied to various loads.

Contents

Trip relay types	43
N type: 「Normal」 type	44
A type: 「Ammeter」 type	46
P type: 「Power meter」 type	48
S type: 「Supreme meter」 type	50
Operation characteristic	52
Measurement function	54
Man machine interface	55
Protection element setting	56
Measurement element display	57
Characteristic curves	58
ZSI - Zone Selective Interlocking	63
Remote reset and digital I/O	64
Communication	65
Event & fault recording	66
System information	66
System block diagram	67

Trip relay types

Classification	N type	A type	P type	S type
Externals				
Current protection	• L / S / I / G / Thermal	• L / S / I / G(or EL) • Thermal • ZSI (Protective coordination)	• L / S / I / G(or EL) • Thermal (linear hot start) • ZSI (Protective coordination)	• L / S / I / G(or EL) • Thermal (linear hot start) • ZSI (Protective coordination)
Other protection	-	-	• Over/Under voltage • Over/Under frequency • Unbalance(Voltage/Current) • Reverse power	• Over/Under voltage • Over/Under frequency • Unbalance(Voltage/Current) • Reverse power
Measurement function	-	• Current (R / S / T / N)	• 3 Phase Voltage/Current RMS/Vector • Power(P, Q, S), PF(3-Phase) • Energy(Positive/Negative) • Frequency, Demand	• 3 Phase Voltage/Current RMS/Vector • Power(P, Q, S), PF(3-Phase) • Energy(Positive/Negative) • Frequency, Demand • Voltage/Current harmonics (1st~63th) • 3 Phase Waveforms • THD, TDD, K-Factor
Fine adjustment	-	-	• Fine adjustment for long/short time delay/instantaneous/ ground	• Fine adjustment for long/short time delay/instantaneous/ ground
Pre Trip Alarm	-	-	• Overload protection relays : DO (Alarm) (Ground fault is not available when using Pre trip alarm)	• Overload protection relays : DO (Alarm) (Ground fault is not available when using Pre trip alarm)
Digital Output	-	• 3DO (Fixed) • L, S/I, G Alarm	• 3DO (Programmable) • Trip, Alarm, General	• 3DO (Programmable) • Trip, Alarm, General
IDMTL setting	-	-	• Compliance with IEC60255-3 SIT, VIT, EIT, DT	• Compliance with IEC60255-3 SIT, VIT, EIT, DT
Communication	-	• Modbus/RS–485 • Profibus–DP	• Modbus / RS-485 • Profibus-DP	• Modbus / RS-485 • Profibus-DP
Power supply	• Self Power - Power source works over 20% of load current.	• Self Power - Power source works over 20% of load current - External power source are required for comm. • AC/DC 100~250V • DC 15~60V	• AC/DC 100~250V • DC 15~60V Basic protection function(L / S / I / G) is still under normal operation without control power.	• AC/DC 100~250V • DC 15~60V
RTC timer	-	• Available	• Available	• Available
LED for trip info.	• Long time delay • Short time delay/Instantaneous • Ground fault	• Long time delay • Short time delay/Instantaneous • Ground fault	• Long time delay • Short time delay/Instantaneous • Ground fault	• Long time delay • Short time delay/Instantaneous • Ground fault
Fault recording	-	• 10 records (Fault/Current/Date and Time)	• 256 records (Fault/Current/Date and Time)	• 256 records • Last fault wave form recording (Voltage, current are recorded in 3-phase, and can be read only by communication
Event recording	-	-	• 256 records(Content, Status, Date)	• 256 records(Content, Status, Date)
Operating button	• Reset button	• Reset, Menu Up/Down, Tap, Enter	• Reset, Menu Up/Down, Tap, Enter	• Reset, Menu Up/Down, Tap, Enter

Each OCR type has Battery in itself.

1. Battery lifespan
   1) When turned off: 14~28years
   2) When using 1 LED consecutively or turned off: 7~14days

2. The display minimum range of OCR current
   1) A type: When more 15% than rated current (In)
   2) P/S type: When more 12% than rated current (In)

* L/S/I/G(or EL)configuration as standard (Only. Unable to select ground fault and earth leakage, simultaneously)

N type: 「Normal」 type

- Optimized protection function
- OCR, OCGR function according IEC60947-2
- Overload protection
  - Long-time delay
  - Thermal
- Short-circuit protection
  - Short-time delay / Instantaneous
  - I^2t On/Off optional (for short-time delay)
- Ground fault protection
  - I^2t On/Off optional
- Self-Power

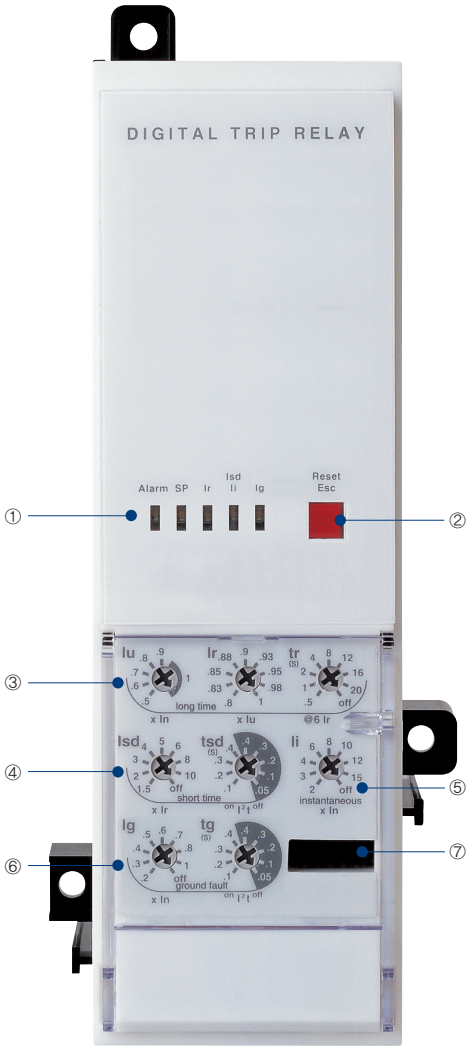

① LED: Indication of trip info. and overload state

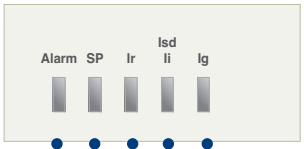

Ig: LED indicating ground-fault
Isd/Ii: LED indicating short-time or instantaneous tripping
Ir: LED indicating long-time delay
SP: Self-protection and battery test LED
Alarm: LED indicating an overload
(Turn on above 90%, Blink above 105%)

② Reset Key: Fault reset or battery check

③ Iu, Ir: Long-time current setting, tr: Long-time tripping delay setting

④ Isd: Short-time current setting, tsd: Short-time tripping delay setting

⑤ Ii: Instantaneous current setting

⑥ Ig: Ground fault current setting, tg: Ground fault tripping delay setting

⑦ Test terminal: OCR test terminal (Connected with OCR tester)

Protection

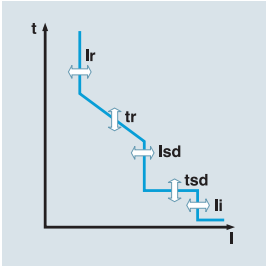

Long time											
Current setting (A)	Iu = In×...		0.5	0.6	0.7	0.8	0.9	1.0			
	Ir = Iu×...		0.8	0.83	0.85	0.88	0.9	0.93	0.95	0.98	1.0
Time delay (s)	tr@(1.5×Ir)		12.5	25	50	100	200	300	400	500	Off
Accuracy: ±15% or	tr@(6.0×Ir)		0.5	1	2	4	8	12	16	20	Off
below 100ms	tr@(7.2×Ir)		0.34	0.69	1.38	2.7	5.5	8.3	11	13.8	Off
Short time											
Current setting (A)	Isd = Ir×...		1.5	2	3	4	5	6	8	10	Off
Time delay (s)	tsd	I^2t Off	0.05	0.1	0.2	0.3	0.4				
Accuracy : ±10% or		I^2t On @(10×Ir)		0.1	0.2	0.3	0.4				
below 50ms	(I^2t Off)	Min. Trip Time(ms)	20	80	160	260	360				
		Max. Trip Time(ms)	80	140	240	340	440				
Instantaneous											
Current setting (A)	Ii = In×...		2	3	4	6	8	10	12	15	Off
Tripping time			below 50ms								
Ground fault											
Pick-up (A)	Ig = In×...		0.2	0.3	0.4	0.5	0.6	0.7	0.8	1.0	Off
Time delay (s)	tg	I^2t Off	0.05	0.1	0.2	0.3	0.4				
Accuracy : ±10%(Ig≥0.4In)		I^2t On @(1×In)		0.1	0.2	0.3	0.4				
±20%(Ig<0.4In)	(I^2t Off)	Min. Trip Time(ms)	20	80	160	260	360				
or below 50ms		Max. Trip Time(ms)	80	140	240	340	440				

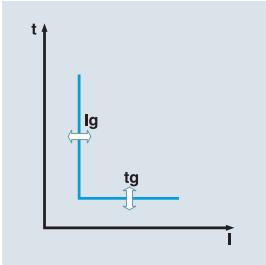

A type: 「Ammeter」 type

- ■ Overload protection
  - Long-time delay
  - Thermal
- ■ Short-circuit protection
  - Short-time delay / Instantaneous
  - I^2t On/Off optional (for short-time delay)
- ■ Ground Fault(or Earth Leakage) Protection
  - Ground Fault : Available to select I^2t ON/OFF
  - Earth Leakage : Applied to use External CT or Private ZCT
    Available to select Alarm/Trip
- ■ Realization of protective coordination by ZSI
  (Zone Selective Interlocking)
- ■ High-performance and high-speed MCU built-in
  - Accurate measurement with tolerance of 1.0%
- ■ Fault recording
  - Records Max. up to 10 fault information about fault type, fault phase, fault data, occurrence time of fault
- ■ SBO (Select Before Operation)
  - High reliability for control and setting change method
- ■ 3 DO(Digital Output)
  - Fixed
- ■ Communication
  - Modbus/RS485
  - Profibus-DP

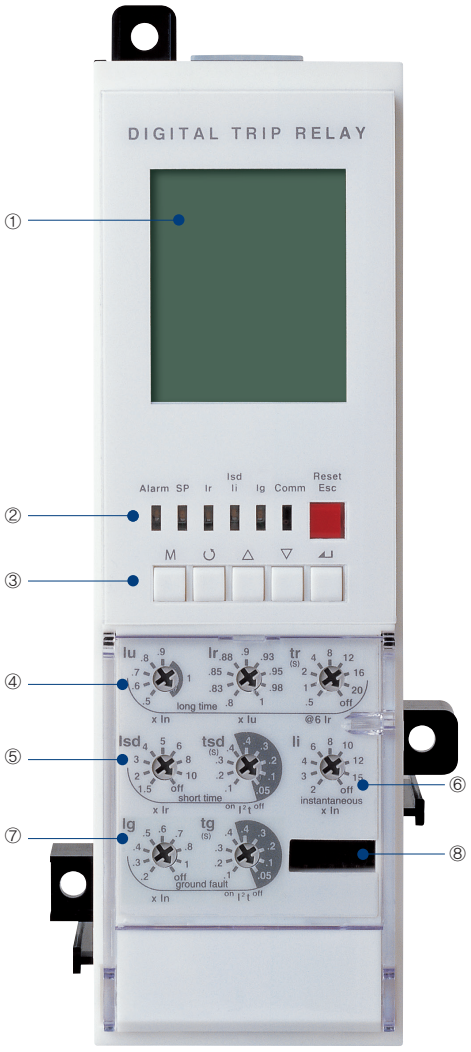

① **LCD: Indication of measurement and information**

② **LED: Indication of trip info. and overload state**

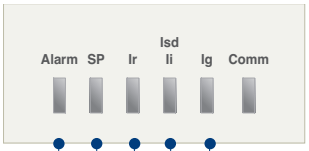

Ig: LED indicating ground-fault
Isd/Ii: LED indicating short-time or instantaneous tripping
Ir: LED indicating long-time delay
SP: Self-protection and battery test LED
Alarm: LED indicating an overload
(Turn on above 90%, Blink above 105%)

③ **Key: Move to menu or reset**

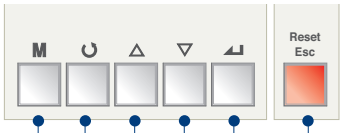

Reset/ESC: Fault reset or ESC from menu
Enter: Enter into secondary menu or setting input
Up/Down: Move the cursor up/down on screen or
increase/decrease a setting value
Right/Left: Move the cursor or setting right/left on screen
(Rotation)
Menu: Menu display ↔ Measurement display

④ **Iu, Ir: Long-time current setting, tr: Long-time tripping delay setting**

⑤ **Isd: Short-time current setting, tsd: Short-time tripping delay setting**

⑥ **Ii: Instantaneous current setting**

⑦ **Ig: Ground fault current setting, tg: Ground fault tripping delay setting**

⑧ **Test terminal: OCR test terminal (Connected with OCR tester)**

Protection

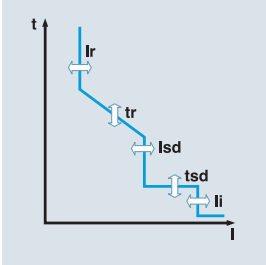

Long time											
Current setting (A)	Iu = In×...		0.5	0.6	0.7	0.8	0.9	1.0			
	Ir = Iu×...		0.8	0.83	0.85	0.88	0.9	0.93	0.95	0.98	1.0
Time delay (s)	tr@(1.5×Ir)		12.5	25	50	100	200	300	400	500	Off
Accuracy: ±15% or	tr@(6.0×Ir)		0.5	1	2	4	8	12	16	20	Off
below 100ms	tr@(7.2×Ir)		0.34	0.69	1.38	2.7	5.5	8.3	11	13.8	Off
Short time											
Current setting (A)	Isd = Ir×...		1.5	2	3	4	5	6	8	10	Off
Time delay (s)	tsd	I²t Off	0.05	0.1	0.2	0.3	0.4				
Accuracy : ±10% or		I²t On @(10×Ir)		0.1	0.2	0.3	0.4				
below 50ms	(I²t Off)	Min. Trip Time(ms)	20	80	160	260	360				
		Max. Trip Time(ms)	80	140	240	340	440				
Instantaneous											
Current setting (A)	Ii = In×...		2	3	4	6	8	10	12	15	Off
Tripping time			below 50ms								
Ground fault											
Pick–up (A)	Ig = In×...		0.2	0.3	0.4	0.5	0.6	0.7	0.8	1.0	Off
Time delay (s)	tg	I²t Off	0.05	0.1	0.2	0.3	0.4				
Accuracy : ±10%(Ig≥0.4In)		I²t On @(1×In)		0.1	0.2	0.3	0.4				
±20%(Ig<0.4In)	(I²t Off)	Min. Trip Time(ms)	20	80	160	260	360				
or below 50ms		Max. Trip Time(ms)	80	140	240	340	440				

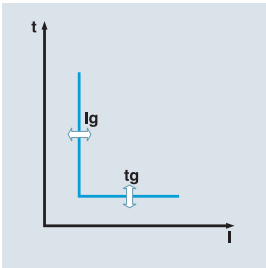

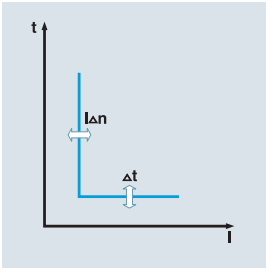

Earth leakage (Option)										
Current setting (A)	IΔn		0.5	1	2	3	5	10	20	30	Off
Time delay (ms)	Δt	Alarm Time(ms)	140	230	350	800	950				
Accuracy: ±15%		Trip Time(ms)	140	230	350	800					

Note) Unable to select ground fault and earth leakage, simultaneously

P type: 「Power meter」 type

- ■ Overload protection
  - Long-time delay
  - Thermal
- ■ Short-circuit protection
  - Short-time delay / Instantaneous
  - I^2t On/Off optional (for short-time delay)
- ■ Ground Fault(or Earth Leakage) Protection
  - Ground Fault : Available to select I^2t ON/OFF
  - Earth Leakage : Applied to use External CT or Private ZCT
    Available to select Alarm/Trip
- ■ Protection for Over voltage/Under voltage/Over frequency/Under frequency/Unbalance/Reverse power
- ■ Realization of protective coordination by ZSI (Zone Selective Interlocking)
- ■ The fine-adjustable setting by knob and Key
- ■ IDMTL setting (SIT, VIT, EIT, DT curve)
  - Basic setting : “None”. Thermal curve.
- ■ Measurement and Display Function
  - High detailed measurement for 3 phase current/Voltage/Power/Energy/Phase angle/Frequency/PF/Demand
  - 128 x 128 Graphic LCD
  - Indicates current/voltage Vector Diagram and Waveform
- ■ Fault recording
  - Records Max. up to 256 fault information about fault type, fault phase, fault value, occurrence time of fault
- ■ Event recording
  - Records events of device related to setting change, operation and state change. (Max. up to 256)
- ■ SBO (Select Before Operation)
  - High reliability for control and setting change method
- ■ 3 DO(Digital output)
  - Programmable for alarm, trip and general DO
- ■ Communication
  - Modbus/RS485
  - Profibus-DP

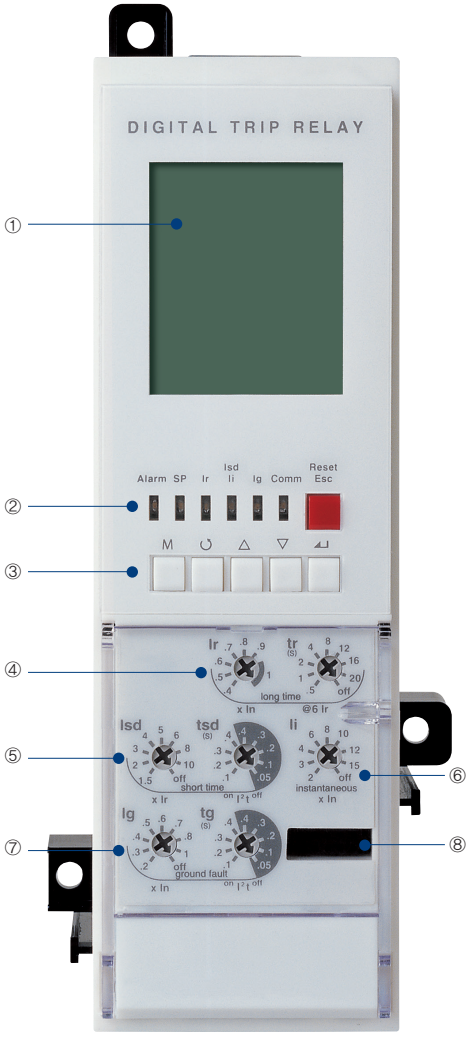

① Graphic LCD: Indication of measurement and information

② LED: Indication of trip info. and overload state

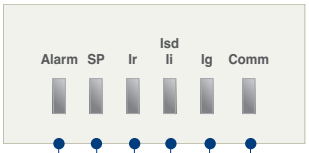

Comm: LED indicating comm. state (Blink when running)
Ig: LED indicating ground-fault
Isd/Ii: LED indicating short-time or instantaneous tripping
Ir: LED indicating long-time delay
SP: Self-protection and battery test LED
Alarm: LED indicating an overload
(Turn on above 90%, Blink above 105%)

③ Key: Move to menu or reset

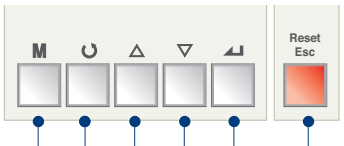

Reset/ESC: Fault reset or ESC from menu
Enter: Enter into secondary menu or setting input
Up/Down: Move the cursor up/down on screen or increase/decrease a setting value
Right/Left: Move the cursor or setting right/left on screen (Rotation)
Menu: Menu display ↔ Measurement display

④ Ir: Long-time current setting, tr: Long-time tripping delay setting

⑤ Isd: Short-time current setting, tsd: Short-time tripping delay setting

⑥ Ii: Instantaneous current setting

⑦ Ig: Ground fault current setting, tg: Ground fault tripping delay setting

⑧ Test terminal: OCR test terminal (Connected with OCR tester)

Protection

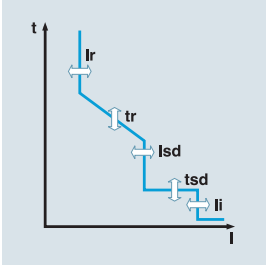

Long time										
Current setting (A)	Ir = In×...		0.4	0.5	0.6	0.7	0.8	0.9	1.0	
Time delay (s)	tr@(1.5×Ir)		12.5	25	50	100	200	300	400	500	Off
Accuracy: ±15% or	tr@(6.0×Ir)		0.5	1	2	4	8	12	16	20	Off
below 100ms	tr@(7.2×Ir)		0.34	0.69	1.38	2.7	5.5	8.3	11	13.8	Off
Short time										
Current setting (A)	Isd = Ir×...		1.5	2	3	4	5	6	8	10	Off
Time delay (s)	tsd	I^2t Off	0.05	0.1	0.2	0.3	0.4				
Accuracy : ±10% or		I^2t On @(10×Ir)		0.1	0.2	0.3	0.4				
below 50ms	(I^2t Off)	Min. Trip Time(ms)	20	80	160	260	360				
		Max. Trip Time(ms)	80	140	240	340	440				
Instantaneous										
Current setting (A)	Ii = In×...		2	3	4	6	8	10	12	15	Off
Tripping time			below 50ms								
Ground fault										
Pick–up (A)		Ig = In×...	0.2	0.3	0.4	0.5	0.6	0.7	0.8	1.0	Off
Time delay (s)	tg	I^2t Off	0.05	0.1	0.2	0.3	0.4				
Accuracy: ±10%(Ig≥0.4In)		I^2t On @(1×In)		0.1	0.2	0.3	0.4				
±20%(Ig<0.4In)	(I^2t Off)	Min. Trip Time(ms)	20	80	160	260	360				
or below 50ms		Max. Trip Time(ms)	80	140	240	340	440				

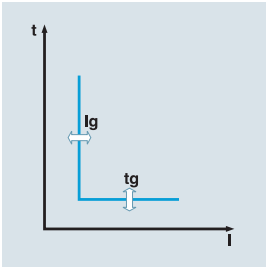

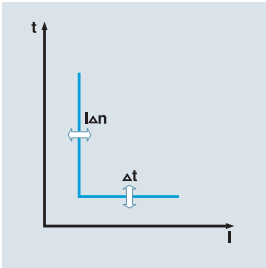

Earth leakage (Option)										
Current setting (A)	$I_{\Delta}n$		0.5	1	2	3	5	10	20	30	Off
Time delay (ms)	$_{\Delta}t$	Alarm Time(ms)	140	230	350	800	950				
Accuracy: ±15%		Trip Time(ms)	140	230	350	800					

Note) Unable to select ground fault and earth leakage, simultaneously

PTA(Pre Trip Alarm)										
Current setting (A)	Ip = Ir x ···	0.6	0.65	0.7	0.75	0.8	0.85	0.9	0.95	1
Time delay (s)	tp@(1.2×Ip)	1	5	10	15	20	25	30	35	Off
Accuracy: ±15%										

Other protection		Pick-up			Time delay(s)		
		Setting range	Step	Accuracy	Setting range	Step	Accuracy
Under voltage		80V ~ 0V_Pick-up	1V	±5%	1.2~40sec	0.1sec	±0.1sec
Over voltage		UV_Pick-up ~ 980V	1V	±5%			
Voltage unbalance		6% ~ 99%	1%	±2.5% or (±10%)			
Reverse power		10~500 kW	1kW	±10%	0.2~40sec		
Over power		500~5000 kW	1kW	±10%			
Current unbalance		6% ~ 99%	1%	±2.5% or (±10%)	1.2~40sec		
Over frequency	60Hz	UF_Pick-up ~ 65	1Hz	±0.1Hz			
	50Hz	UF_Pick-up ~ 55	1Hz	±0.1Hz			
Under frequency	60Hz	55Hz ~ OF_Pick-up	1Hz	±0.1Hz			
	50Hz	45Hz ~ OF_Pick-up	1Hz	±0.1Hz			

S type: 「Supreme meter」 type

- ■ Overload protection
  - Long-time delay
  - Thermal
- ■ Short-circuit protection
  - Short-time delay / Instantaneous
  - I^2t On/Off optional (for short-time delay)
- ■ Ground Fault(or Earth Leakage) Protection
  - Ground Fault : Available to select I^2t ON/OFF
  - Earth Leakage : Applied to use External CT or Private ZCT Available to select Alarm/Trip
- ■ Protection for Over voltage/Under voltage/Over frequency/Under frequency/Unbalance/Reverse power
- ■ Realization of protective coordination by ZSI (Zone Selective Interlocking)
- ■ The fine-adjustable setting by knob and Key
- ■ IDMTL setting (SIT, VIT, EIT, DT curve)
  - Basic setting : “None”. Thermal curve.
- ■ Measurement and Display Function
  - High detailed measurement for 3 phase current/Voltage/Power/Energy/ Phase angle/Frequency/PF/Demand
  - 128 x 128 Graphic LCD
  - Indicates current/voltage Vector Diagram and Waveform
- ■ Fault recording
  - Records Max. up to 256 fault information about fault type, fault phase, fault value, occurrence time of fault
  - Fault wave recording: records the latest fault wave
- ■ Event recording
  - Records events of device related to setting change, operation and state change. (Max. up to 256)
- ■ SBO (Select Before Operation)
  - High reliability for control and setting change method
- ■ Power quality analysis
  - Measurement for 1st~63th harmonics
  - THD, TDD, k-Factor
  - Voltage/current waveform capture
- ■ 3 DO(Digital output)
  - Programmable for alarm, trip and general DO
- ■ Communication
  - Modbus/RS485
  - Profibus-DP

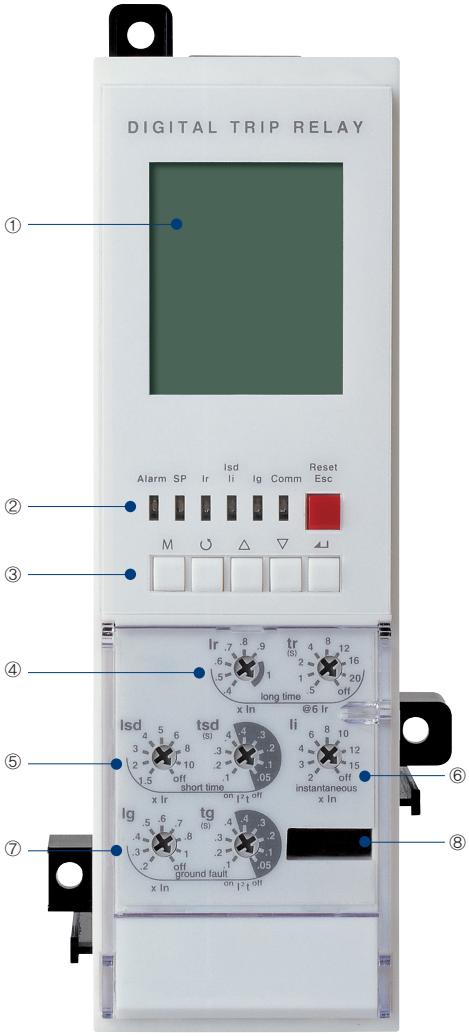

① Graphic LCD: Indication of measurement and information

② LED: Indication of trip info. and overload state

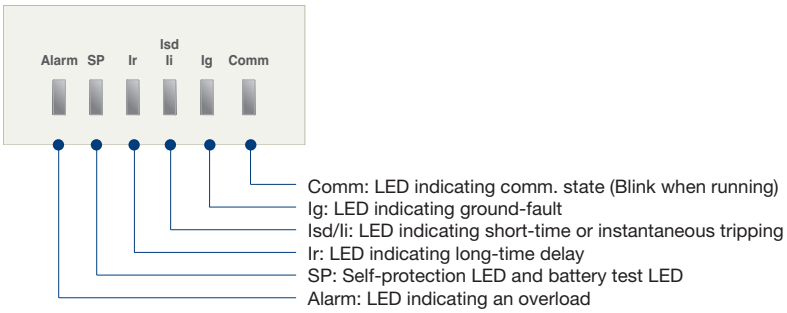

③ Key: Move to menu or reset

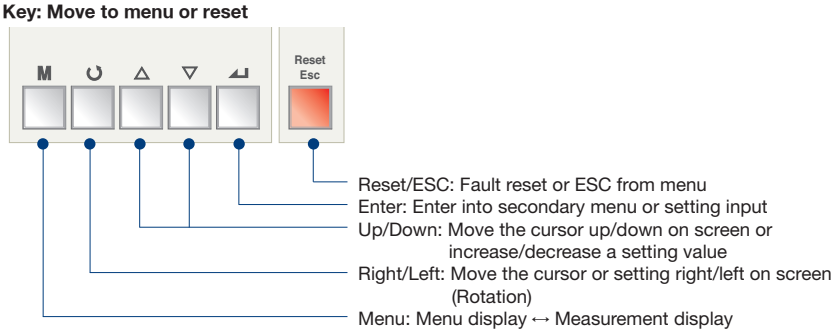

④ Ir: Long-time current setting, tr: Long-time tripping delay setting

⑤ Isd: Short-time current setting, tsd: Short-time tripping delay setting

⑥ Ii: Instantaneous current setting

⑦ Ig: Ground fault current setting, tg: Ground fault tripping delay setting

⑧ Test terminal: OCR test terminal (Connected with OCR tester)

Protection

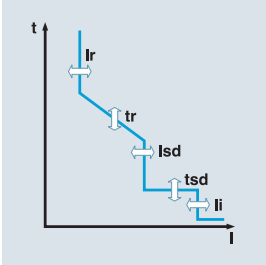

Long time										
Current setting (A)	Ir = In×...		0.4	0.5	0.6	0.7	0.8	0.9	1.0	
Time delay (s)	tr@(1.5×Ir)		12.5	25	50	100	200	300	400	500	Off
Accuracy: ±15% or	tr@(6.0×Ir)		0.5	1	2	4	8	12	16	20	Off
below 100ms	tr@(7.2×Ir)		0.34	0.69	1.38	2.7	5.5	8.3	11	13.8	Off
Short time										
Current setting (A)	Isd = Ir×...		1.5	2	3	4	5	6	8	10	Off
Time delay (s)	tsd	I^2t Off	0.05	0.1	0.2	0.3	0.4				
Accuracy : ±10% or		I^2t On @(10×Ir)		0.1	0.2	0.3	0.4				
below 50ms	(I^2t Off)	Min. Trip Time(ms)	20	80	160	260	360				
		Max. Trip Time(ms)	80	140	240	340	440				
Instantaneous										
Current setting (A)	Ii = In×...		2	3	4	6	8	10	12	15	Off
Tripping time			below 50ms								
Ground fault										
Pick–up (A)		Ig = In×...	0.2	0.3	0.4	0.5	0.6	0.7	0.8	1.0	Off
Time delay (s)	tg	I^2t Off	0.05	0.1	0.2	0.3	0.4				
Accuracy: ±10%(Ig≥0.4In)		I^2t On @(1×In)		0.1	0.2	0.3	0.4				
±20%(Ig<0.4In)	(I^2t Off)	Min. Trip Time(ms)	20	80	160	260	360				
or below 50ms		Max. Trip Time(ms)	80	140	240	340	440				

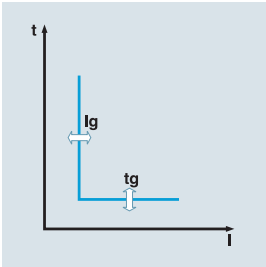

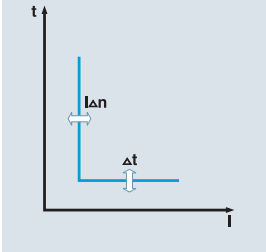

Earth leakage (Option)										
Current setting (A)	$I_{\Delta}n$		0.5	1	2	3	5	10	20	30	Off
Time delay (ms)	$_{\Delta}t$	Alarm Time(ms)	140	230	350	800	950				
Accuracy: ±15%		Trip Time(ms)	140	230	350	800					

Note) Unable to select ground fault and earth leakage, simultaneously

PTA(Pre Trip Alarm)										
Current setting (A)	Ip = Ir x ···	0.6	0.65	0.7	0.75	0.8	0.85	0.9	0.95	1
Time delay (s)	tp@(1.2×Ip)	1	5	10	15	20	25	30	35	Off
Accuracy: ±15%										

Other protection		Pick-up			Time delay(s)		
		Setting range	Step	Accuracy	Setting range	Step	Accuracy
Under voltage		80V ~ 0V_Pick-up	1V	±5%	1.2~40sec	0.1sec	±0.1sec
Over voltage		UV_Pick-up ~ 980V	1V	±5%			
Voltage unbalance		6% ~ 99%	1%	±2.5% or (±10%)			
Reverse power		10~500 kW	1kW	±10%	0.2~40sec		
Over power		500~5000 kW	1kW	±10%			
Current unbalance		6% ~ 99%	1%	±2.5% or (±10%)	1.2~40sec		
Over frequency	60Hz	UF_Pick-up ~ 65	1Hz	±0.1Hz			
	50Hz	UF_Pick-up ~ 55	1Hz	±0.1Hz			
Under frequency	60Hz	55Hz ~ OF_Pick-up	1Hz	±0.1Hz			
	50Hz	45Hz ~ OF_Pick-up	1Hz	±0.1Hz			

Operation characteristics

Long-time delay (L)

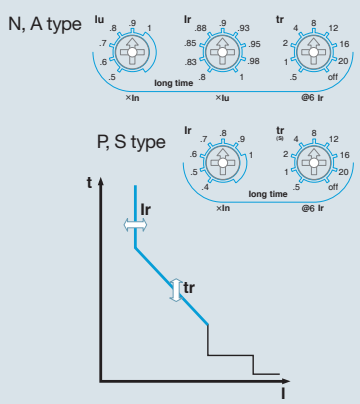

The function for overload protection which has time delayed characteristic in inverse ratio to fault current.

1. Standard current setting knob: Ir
   1) Setting range in P type and S type: (0.4-0.5-0.6-0.7-0.8-0.9-1.0)×In
   2) Setting range in N type and A type: (0.4 ~1.0)×In
      - Iu: (0.5-0.6-0.7-0.8-0.9-1.0)×In
      - Ir: (0.8-0.83-0.85-0.88-0.9-0.93-0.95-0.98-1.0)×Iu
2. Time delay setting knob: tr
   - Standard operating time is based on the time of 6×Ir
   - Setting range: 0.5-1-2-4-8-12-16-20-Off sec
3. Relay pick-up current
   - When current over (1.15)×Ir flows in, relay is picked up.
4. Relay operates basing on the largest load current among R/S/T/N phase.

Short-time delay (S)

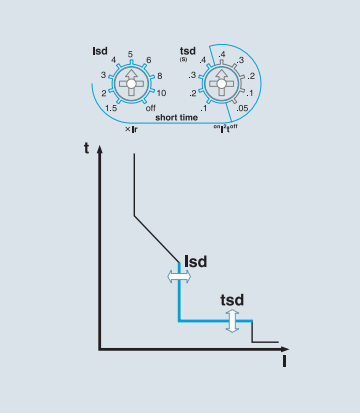

The function for fault current (over current) protection which has definite time characteristic and time delayed in inverse ratio to fault current.

1. Standard current setting knob: Isd
   - Setting range: (1.5-2-3-4-5-6-8-10-Off)×Ir
2. Time delay setting knob: tsd
   - Standard operating time is based on the time of 10×Ir.
   - Inverse time (I^2t On): 0.1-0.2-0.3-0.4 sec
   - Definite time (I^2t Off): 0.05-0.1-0.2-0.3-0.4 sec
3. Relay operates basing on the largest load current among R/S/T/N phase.
4. When ZSI function was set, the protection operation will take place instantaneously with input absence by downstream devices. It is advised to disable its ZSI function on the last downstream device.

Instantaneous (I)

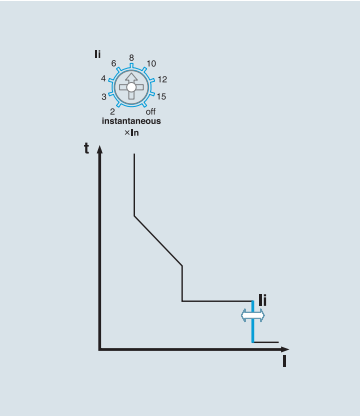

The function for breaking fault current above the setting value within the shortest time to protect the circuit from short-circuit.

1. Standard current setting knob: Ii
   - Setting range: (2-3-4-6-8-10-12-15-Off)×In
2. Relay operates basing on the largest load current among R/S/T/N phase.
3. Total breaking time is below 50ms.

Ground Fault (G)

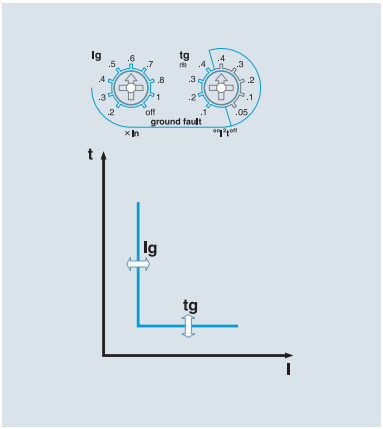

The function for breaking ground fault current above setting value after time-delay to protect the circuit from ground fault.

1. Standard setting current knob: Ig
   - Setting range: (0.2-0.3-0.4-0.5-0.6-0.7-0.8-1.0-Off)×In
2. Time delay setting knob: tg
   - Inverse time (I^2t On): 0.1-0.2-0.3-0.4 sec
   - Definite time (I^2t Off): 0.05-0.1-0.2-0.3-0.4 sec
3. Ground fault current is vector sum of each phase current. Therefore, 3Pole products may operate under its phase-unbalance including ground fault situations.(R+S+T+(N) Phase)
4. When ZSI function was set, the protection operation will take place instantaneously with input absence by downstream devices. It is advised to disable its ZSI function on the last downstream device.
5. Ground-fault functions are basically provided with products equipped with a trip relay through its internal CT that is embedded in each phase.(But, it can't be used with earth-leakage protection function at the same time)

Earth Leakage (G) - Option

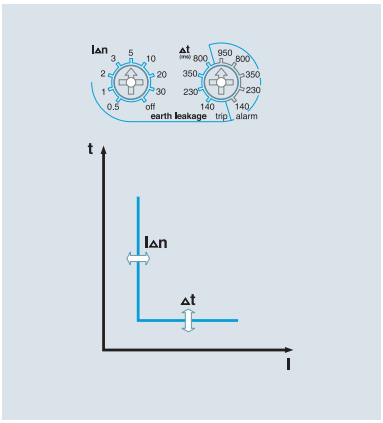

The function for breaking earth leakage current above setting value after time delay to protect the circuit from earth leakage. (A, P, S type)

1. Standard setting current knob: I△n
   - Setting range: 0.5-1-2-3-5-10-20-30-Off (A)
2. Time delay setting knob: △t
   - Trip time: 140-230-350-800 ms
   - Alarm time: 140-230-350-800-950 ms
3. Settings within its alarm range will prevent its breaker from tripping but activating its alarm.
4. This function is enabled and can be used only with standard ZCT provided by LS or private external CT(secondary output 5A) selected by customers.
5. When ZSI function was set, the protection operation will take place instantaneously with input absence by downstream devices. It is advised to disable its ZSI function on the last downstream device.

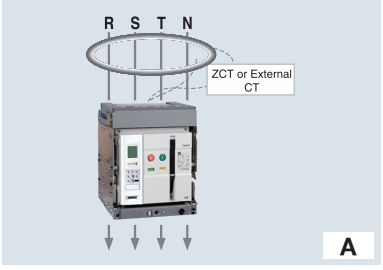

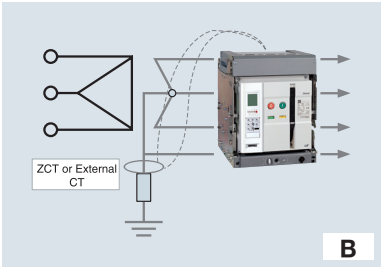

※Use cautions with earth-leakage current settings

- When using a standard ZCT provided by LS, the setting range is from 0.5 to 30A which is based on its primary current. But ACB installed like A type (displayed on the left side) should only be cable-connected and its rated current should be less than 1600A.
- When using other CT selected by customers, the setting range is from 0.5 to 5A based on its secondary current.(Secondary output rating : 5A)
  Hence, under 100:5A CT, if trip relay is set to 0.5A, earth-leakage exceeding 10A will activate its operation (0.5A×20 = 10A)

※Guideline for the external CT usage

- Earth-leakage protection characteristics using the standard CT which is installed inside of ACB can protect currents from 20 to 100% range on its rated current.
- As rated currents on ACB increases, current that is covered by its standard CT increase as well. This can not protect against small leakage currents.
  ex) 400A ACB Min. Earth-leakage current 400A×20% =80A
  4000A ACB Min. Earth-leakage current 4000A×20% =800A
- Therefore, customers are advised to install an external CT in accordance with its rated currents within its systems. And choose trip relay(E, X type) which is required with external CT usage in order to provide earth-leakage functions.

Measurement function

A type

P type

S type

Class.	Measurement element	Detailed element	Unit	Display range
Current	Line current	Ia,Ib,Ic	A	A type: 0.15In~17In P/S type: 0.12In~1.6In
	Normal current	I_1		
	Reverse current	I_2		
Voltage	Line voltage	Vab,Vbc,Vca	V	60~690V
	Phase voltage	Va,Vb,Vc		
	Normal voltage	V_1		
	Reverse voltage	V_2		
Angle	Line-to-line Line-to-current	∠VabIa, ∠VabIb, ∠VabIc, ∠VabVbc, ∠VabVca	°	0~360°
	Phase-to-phase	∠VaVb,∠VaVc		
	Phase-to-current	∠VaIa, ∠VbIb, ∠VcIc		
Power	Active power	Pa(ab), Pb(bc), Pc(ca), P	kW	1kW~99,999kW
	Reactive power	Qa(ab), Qb(bc), Qc(ca), Q	kVar	1kVar~99,999kVar
	Apparent power	Sa(ab), Sb(bc), Sc(ca), S	kVA	1kVA~99,999kVA
Energy	Active energy	WHa(ab), WHb(bc), WHc(ca), WH	kWh MWh	1kWh~9999.99MWh
	Reactive energy	VARHa(ab), VARHb(bc), VARHc(ca), VARH	kVarh Mvarh	1kVarh~9999.99MVarh
	Reverse active energy	rWHa(ab), rWHb(bc), rWHc(ca), rWH	kWh MWh	1kWh ~9999.99MWh
Freq.	Frequency	F	Hz	45~65Hz
Power factor	Power factor(PF)	PFa(ab), PFb(bc), PFc(ca), PF		+: Lead, -: Lag
Unbalance	Unbalance rate	Iunbalance, Vunbalance	%	0.0~100.0
Demand	Active power demand	Peak demand	kW	1kW~99,999kW
	Current demand	Peak demand	A	80A~65,535A
Harmonics	Voltage harmonics	1st~63th harmonics of Va(ab),Vb(bc),Vc(ca)	V	60~690V
	Current harmonics	1st~63th harmonics of Ia,Ib,Ic	A	80A~65,535A
	THD, TDD		%	0.0~100.0
	K-Factor		-	0.0~100.0



Voltage module

For P and S type Trip relay, separate voltage module is necessary
to measure other element besides current (Seperate purchase is needed)
- Voltage input range: AC 60~690V
- Input/Output Ratio → 220V: 200mV

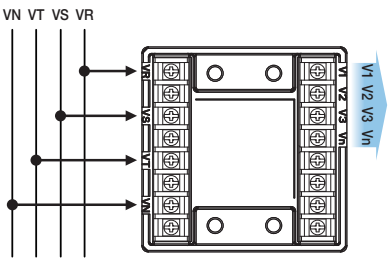

3P4W wiring

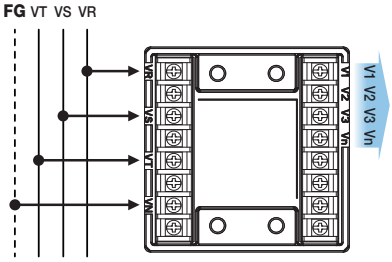

3P3W wiring

Man machine interface

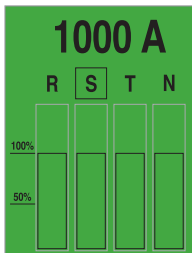

Initial display

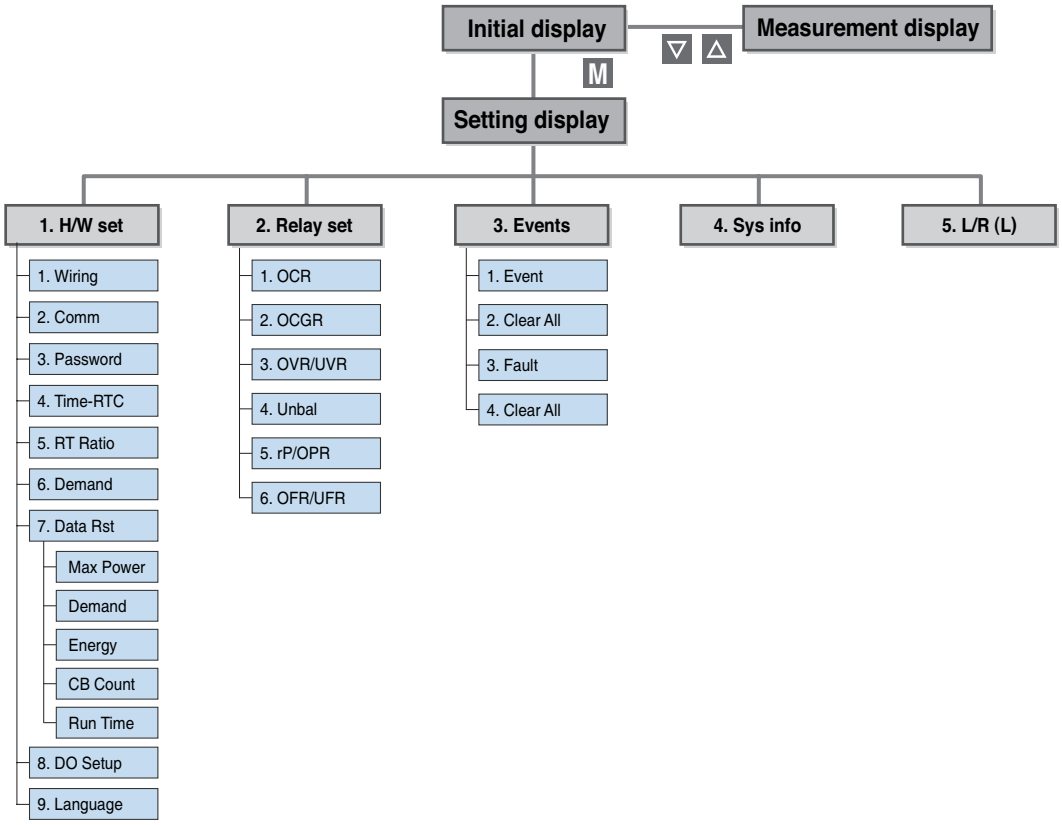

An example of graphic LCD display

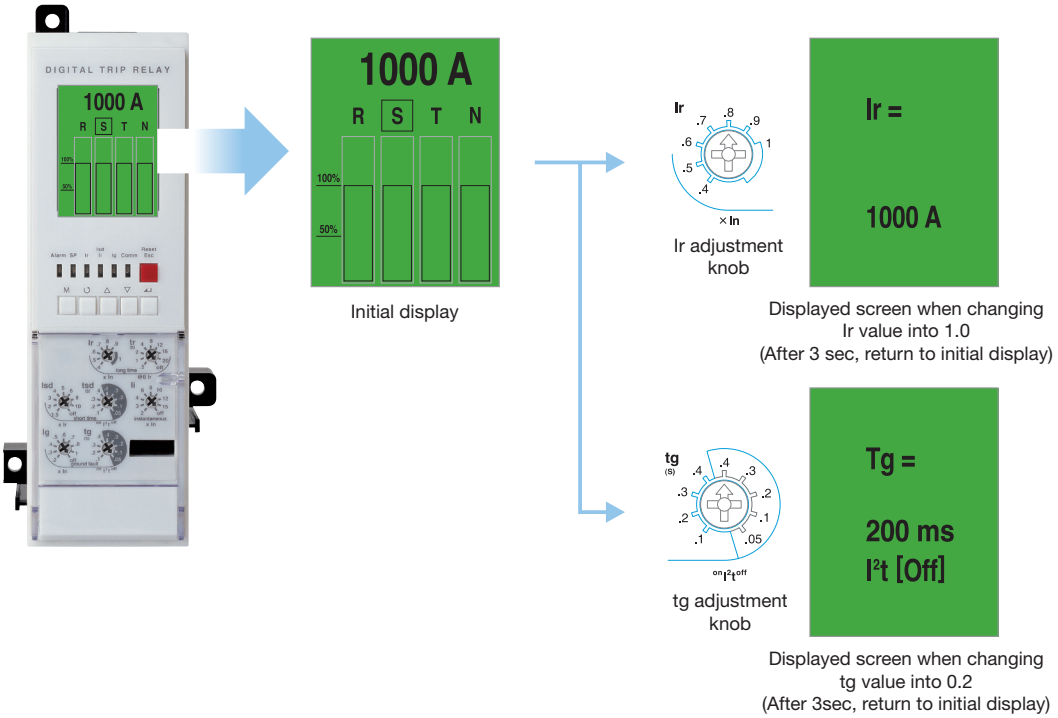

Protection element setting

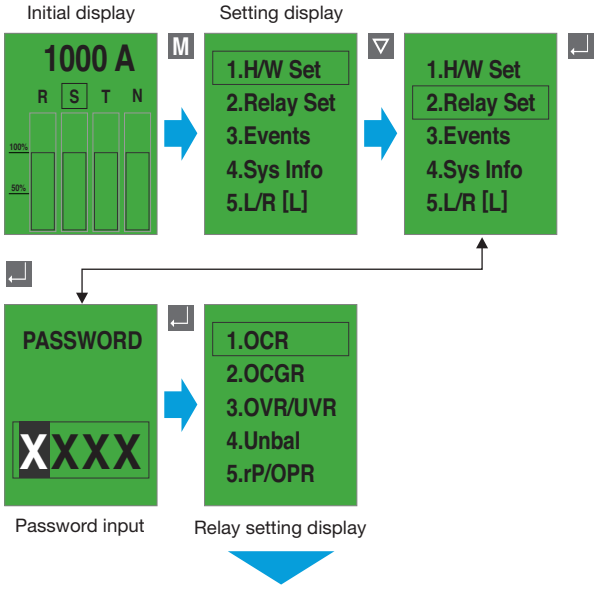

Find adjustment of protection setting current

- OCR and OCGR's current setting is basically controlled by knob's setting values.
- The fine current that cannot be controlled by knob is adjustable by using ▽ , △ key.
- Fine adjustment is only adjustable in the present knob and next knob's setting range, when moving knob, the adjusted data becomes reset state.

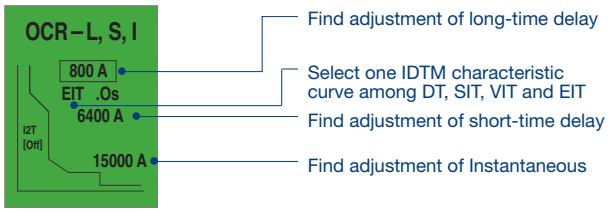

- The setting method of OCGR is same with OCR's, fine adjustment is available.

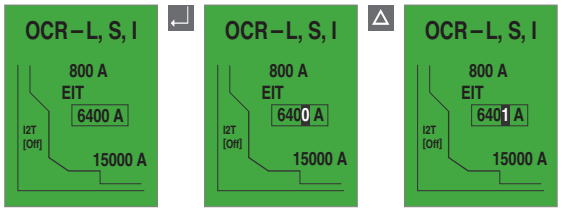

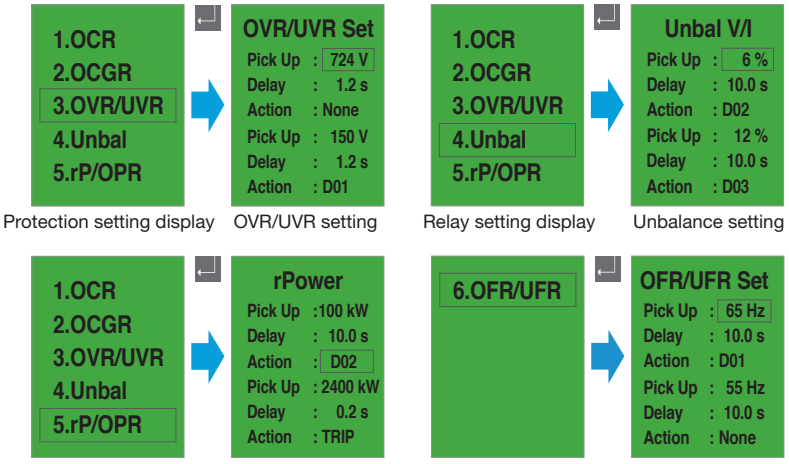

Measurement element display

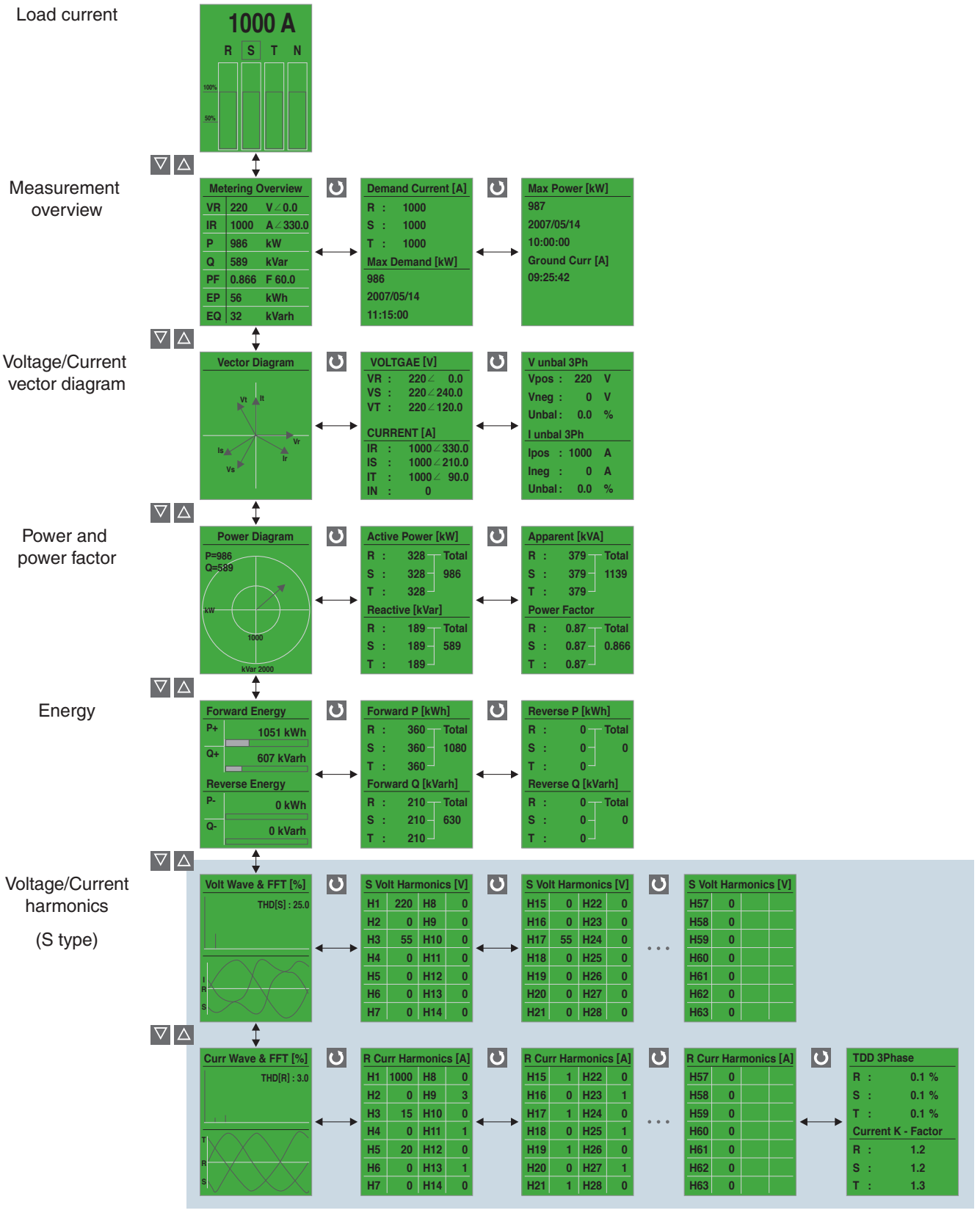

Characteristics curves

Long-time delay (L)

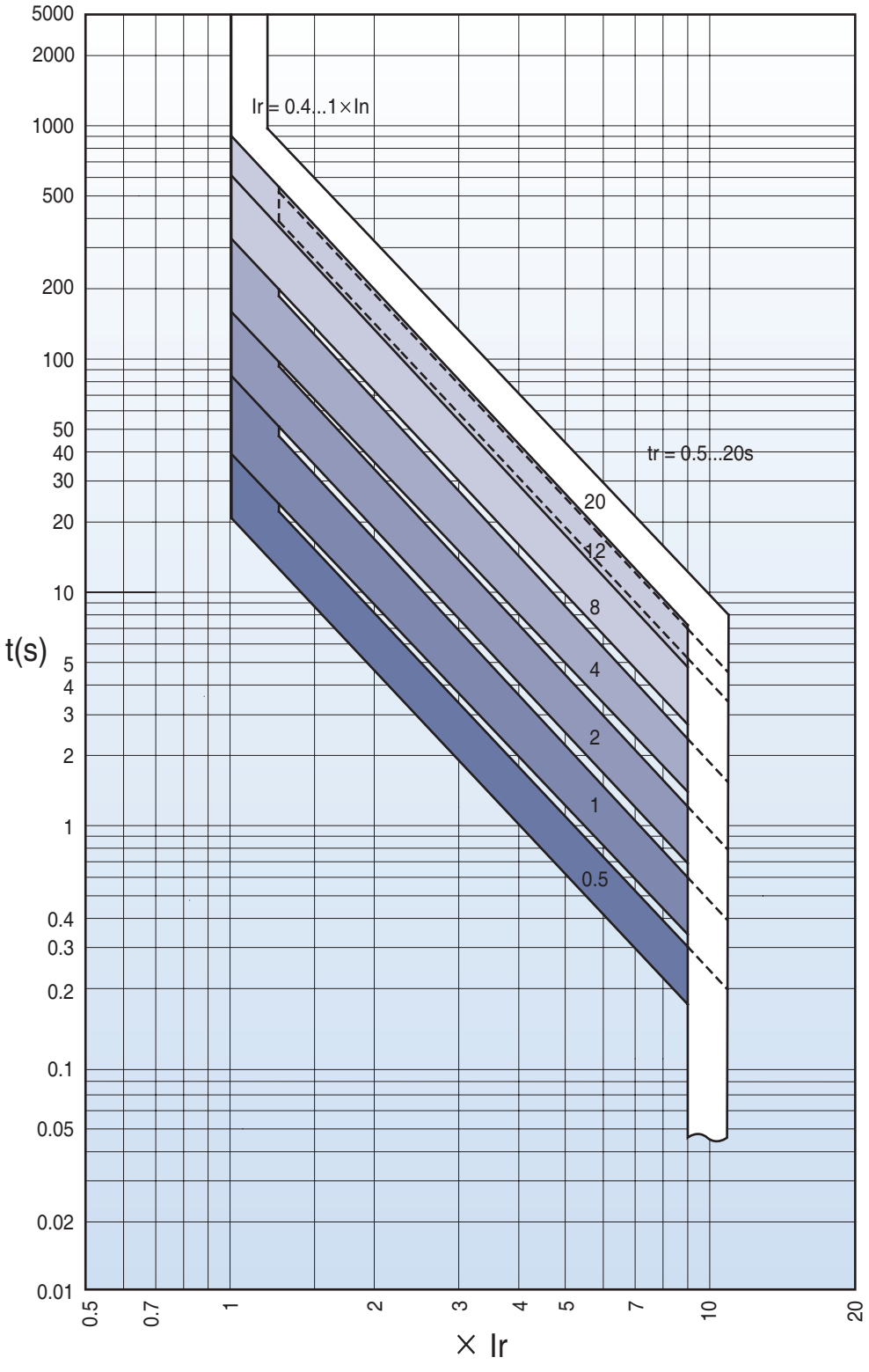

Short-time delay (S)

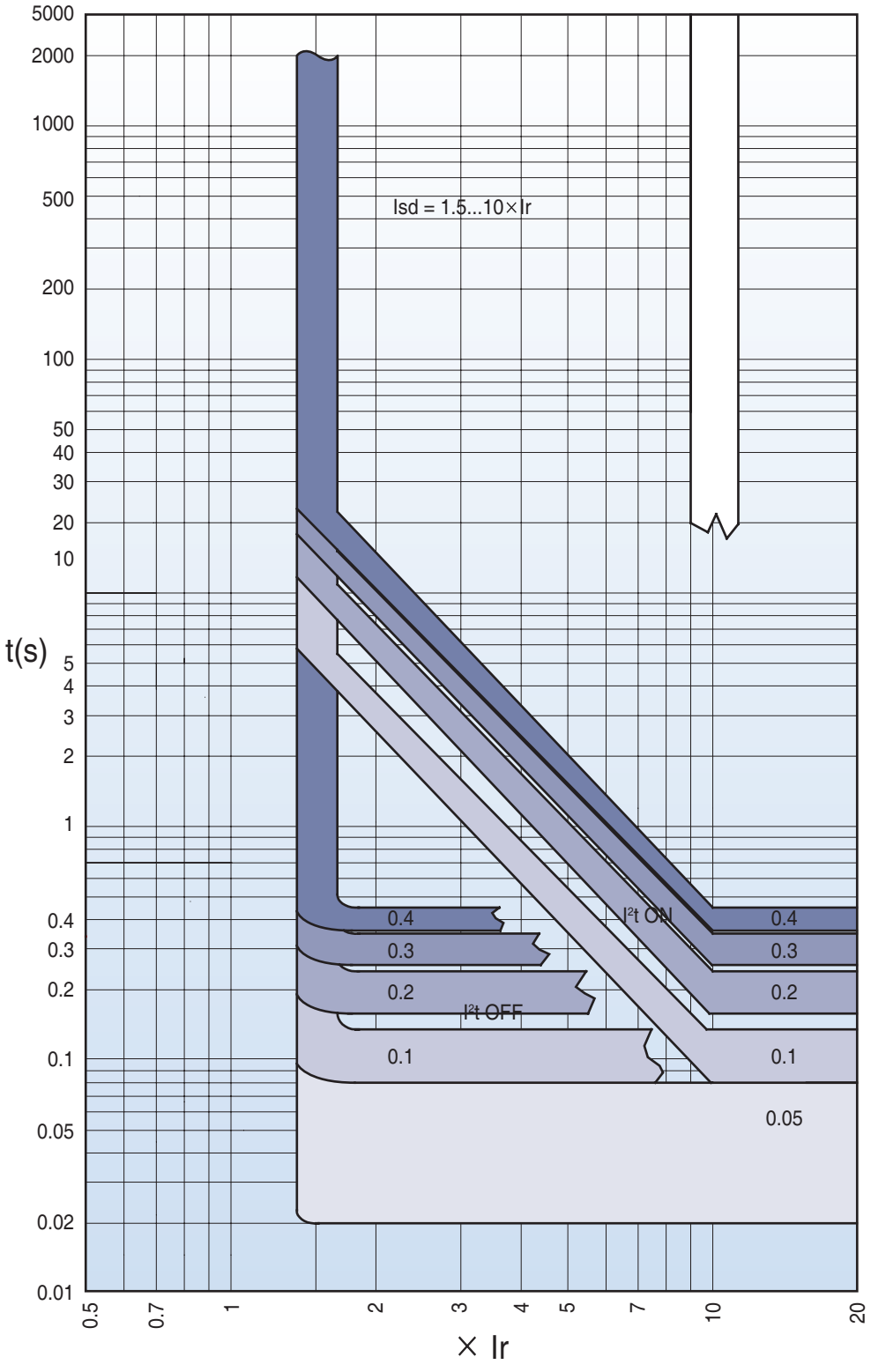

Characteristics curves

Instantaneous (I)
Ground fault (G)

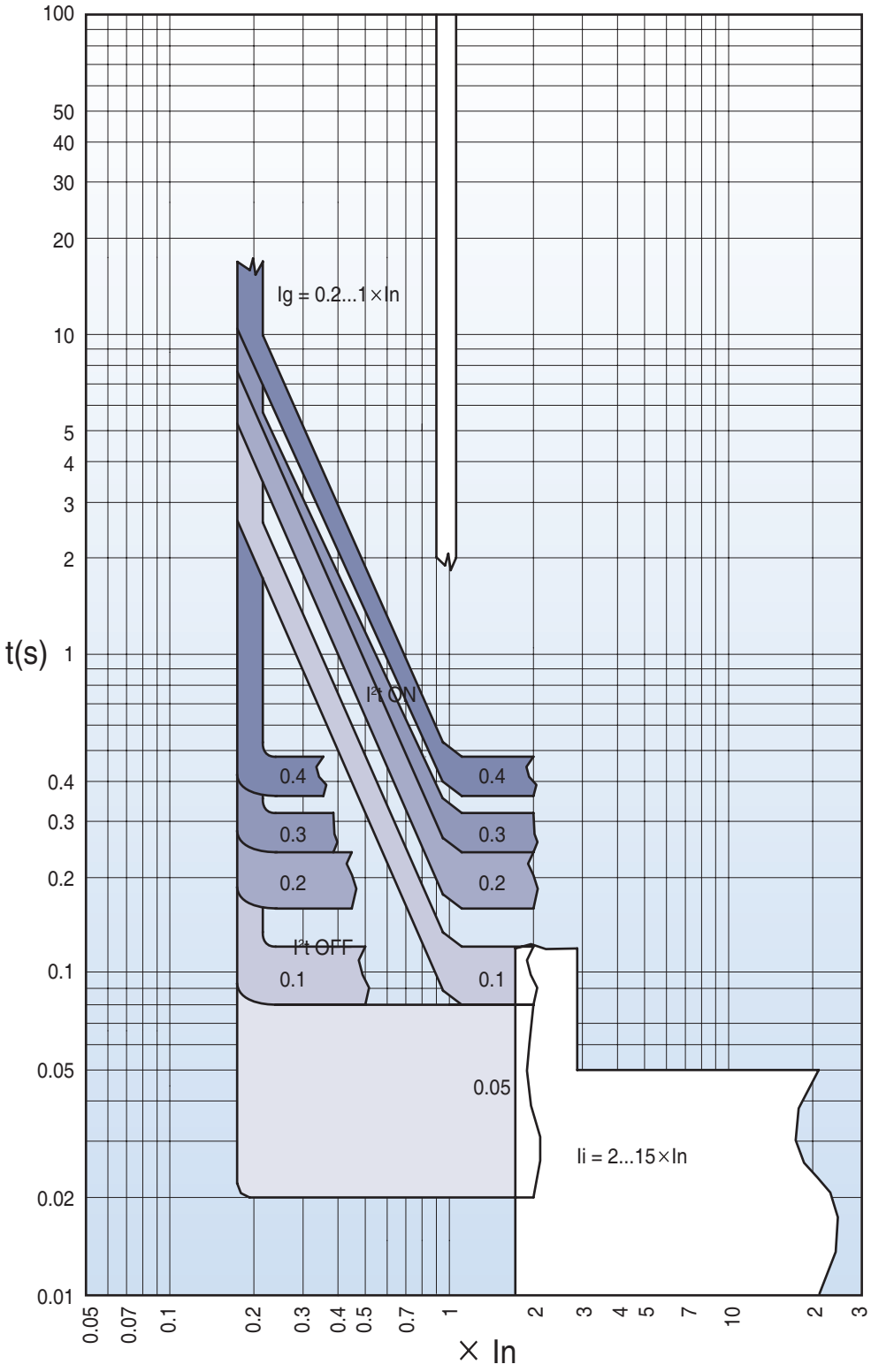

IDMTL

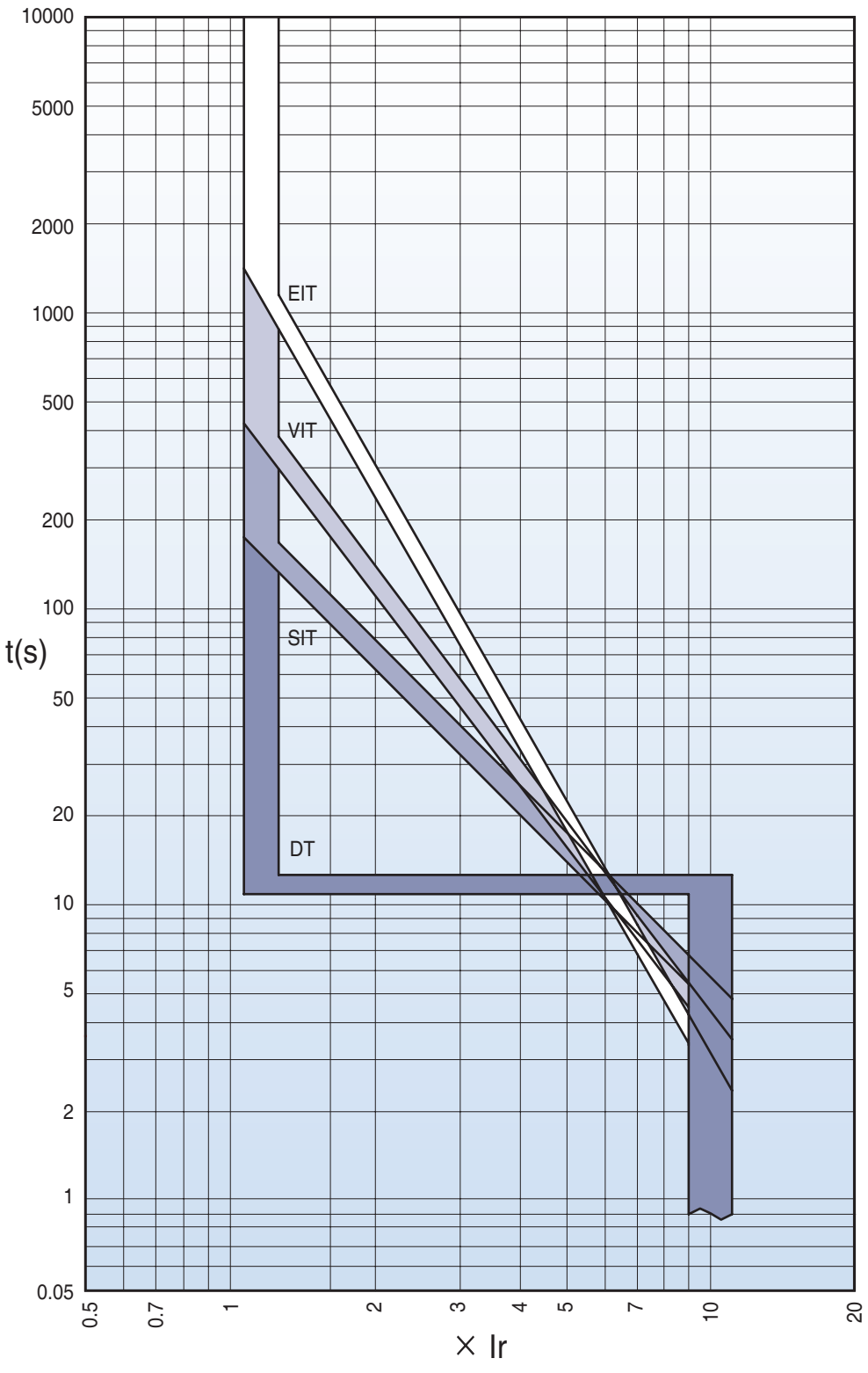
10000
5000
2000
1000
500
200
100
50
20
10
5
2
1
0.05
t(s)
EIT
VIT
SIT
DT
0.5
0.7
1
2
3
4
5
7
10
20
× Ir

Characteristics curves

Pre Trip Alarm

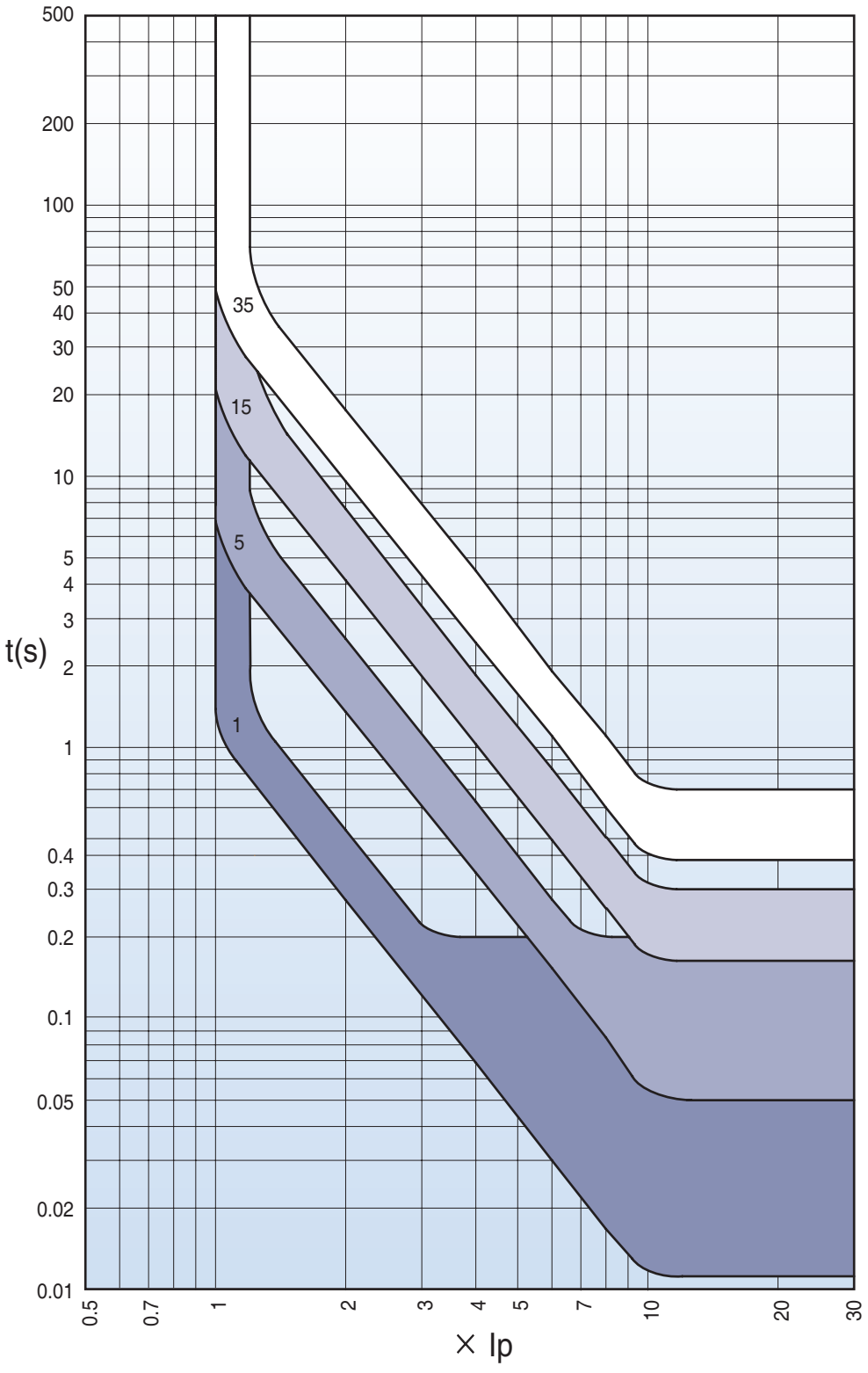

ZSI - Zone Selective Interlocking (A, P, S type)

Zone-selective interlocking drops delay time that eliminates faults for breakers. It minimizes the shock that all kinds of electric machineries get under fault conditions.

1. In case of that short time-delay or ground fault accident occurs at ZSI built in system, the breaker at accident site sends ZSI signal to halt upstream breaker's operation.
2. To eliminate a breakdown, trip relay of ACB at accident site activates trip operation without time delay.
3. The upstream breaker that received ZSI signal adhere to pre-set short time-delay or ground fault time-delay for protective coordination in the system. However upstream breaker that did not receive its signal will trip instantaneously.
4. For ordinary ZSI operation, it should arrange operation time accordingly so that downstream circuit breakers will react before upstream ones under overcurrent/short time delay/ ground fault situations.
5. ZSI connecting line needs to be Max. 3m.

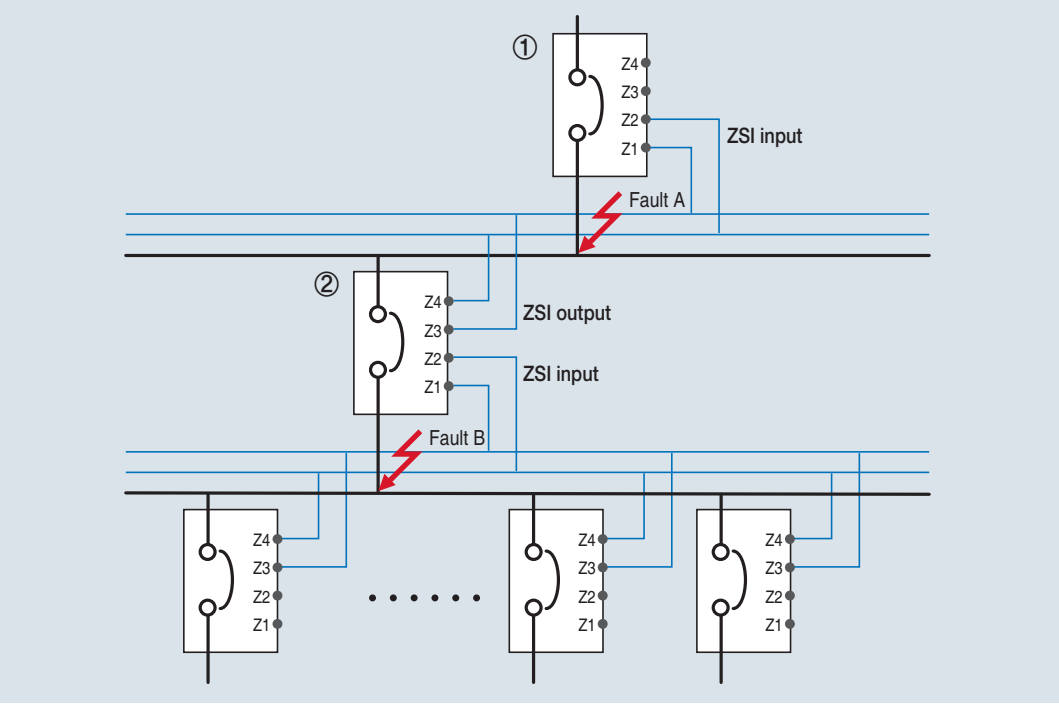

1) Occurrence of fault A
   - Only breaker ① performs instantaneous trip operation.
2) Occurrence of fault B
   - Breaker ② performs instantaneous trip operation, breaker ① performs trip operation after prearranged delay time
   - But if breaker ② did not break the fault normally, breaker ① performs instantaneous trip operation to protect system.

Remote reset and digital I/O (A, P, S type)

**In case of that ACB operates due to accidents or over current,
Trip relay indicates the information of the accident through the LED and LCD.
Trip relay A, P and S type is possible to perform the remote reset by digital input,
and have 3 DO(Digital output).**

1. Methods to reset Trip relay is to push the Reset button on the frontal side and to use the remote reset.

2. Digital input
   - [R11-R22] input: Remote reset
   - [Z1-Z2] Input: ZSI input
   - [E1-E2] Input: ZCT for earth leakage detection or external CT input

※All DI are dry contact that has 3.3V of recognition voltage. When inputting close by SSR(Solid State Relay) or open-collector, connect collector(Drain) to R11.

3. Digital output 3a(524, 534, 544-513)
   - Fault output: Long/Short time delay, Instantaneous, Ground fault, UVR, OVR, UFR, OFR, rPower, Vunbal, Iunbal
     (Maintains state as Latch form until user pushes reset.)
   - General DO: when setting L/R as remote, it is available to control close/open remotely by using communication.

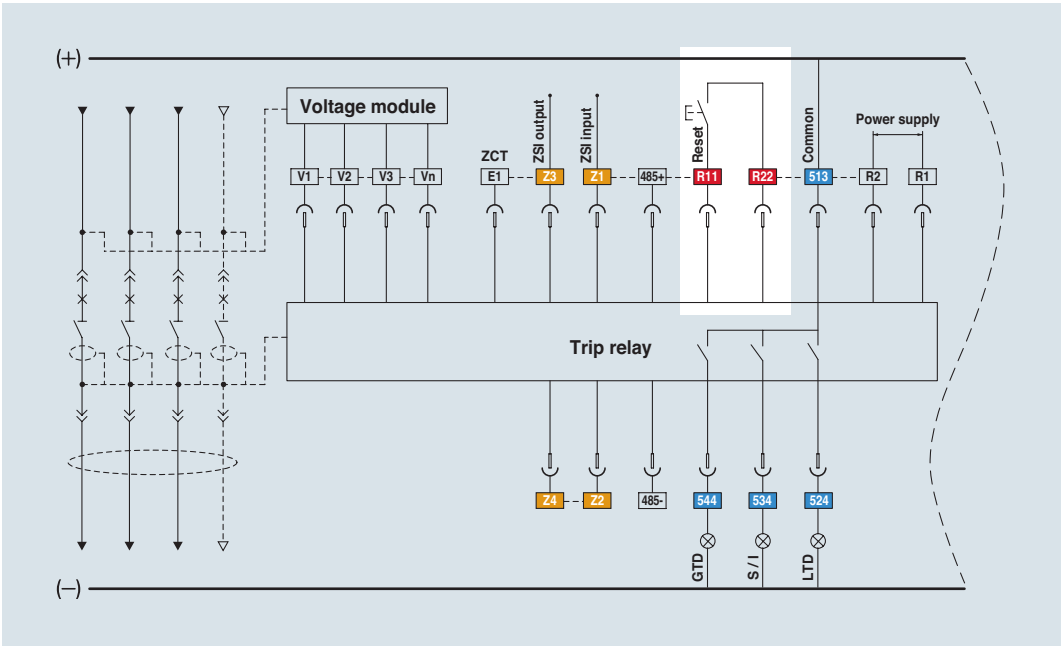

Trip Relay	Digital Output	Long time	Short time	Instantaneous	Ground	Overload Alarm	OVR	UVR	rPower	Vunbal	Iunbal	OFR	UFR	OPR	Note
P, S type	DO1(524)	●	○	○	○	○	○	○	○	○	○	○	○	○	Programmable
	DO2(534)	○	●	●	○	○	○	○	○	○	○	○	○	○	
	DO3(544)	○	○	○	●	○	○	○	○	○	○	○	○	○	
A type	DO1(524)	●	×	×	×	Not available									Fixed
	DO2(534)	×	●	●	×										
	DO3(544)	×	×	×	●										

Communication

Modbus/RS-485

- Operation mode: Differential
- Distance: Max. 1.2km
- Cable :
  General RS-485 shielded twist 2-pair cable
- Baud rate :
  9600bps, 19200bps, 38400bps
- Transmission method: Half-Duplex
- Termination: 100Ω

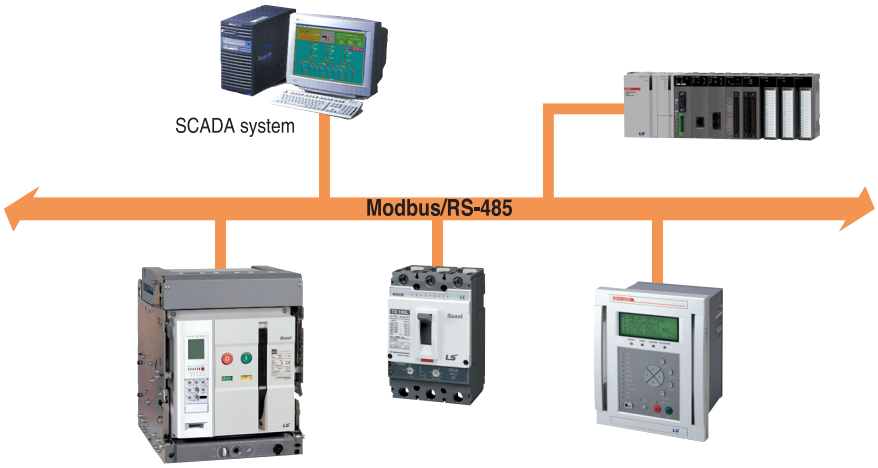

Profibus-DP

- Profibus-DP module is installed separately (Option)
- Operation mode: Differential
- Distance: Max. 1.2km
- Cable :
  Profibus-DP shielded twist 2-pair cable
- Baud rate: 9600bps~12Mbps
- Transmission method: Half-Duplex
- Termination: 100Ω
- Standard: EN 50170 / DIN 19245



Profibus-DP communication module (Option)

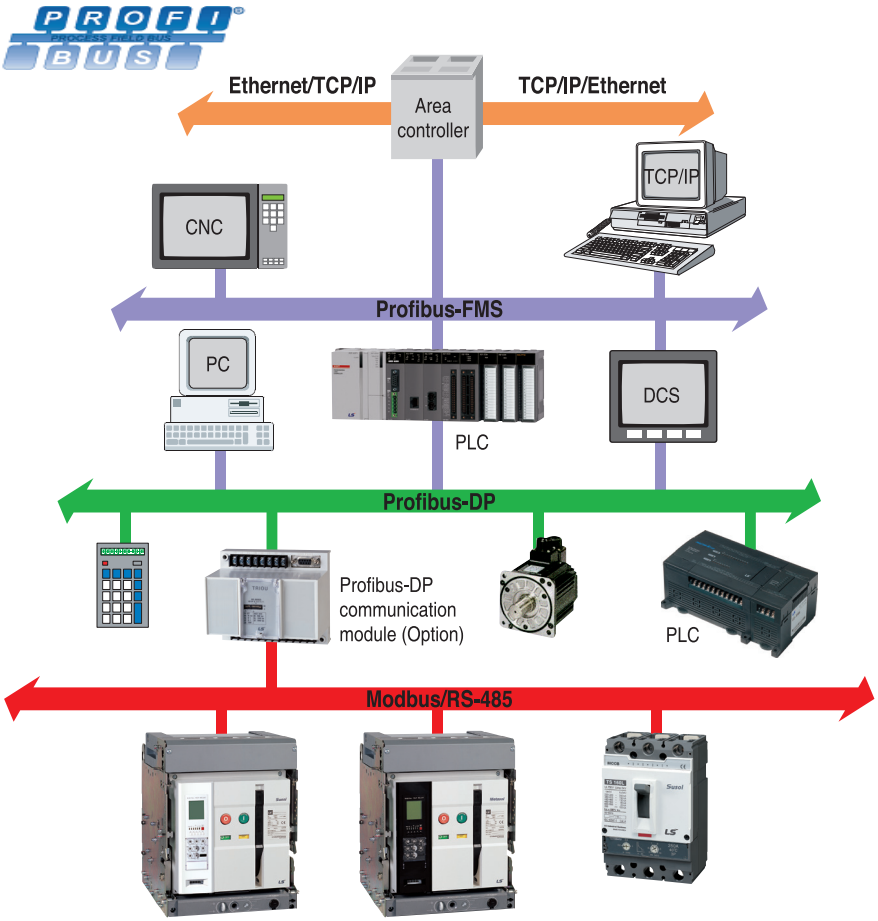

Event & fault recording (P, S type)

When there are events such as setting change, Info. change, error of self-diagnose, state change, P and S type record Max. up to 256 information of the events in accordance with time(ms). In addition, they can record Max. up to 256(up to 10 for A type) information of the faults such as fault cause, fault phase, fault value and so on in accordance with time(ms).

Event information display

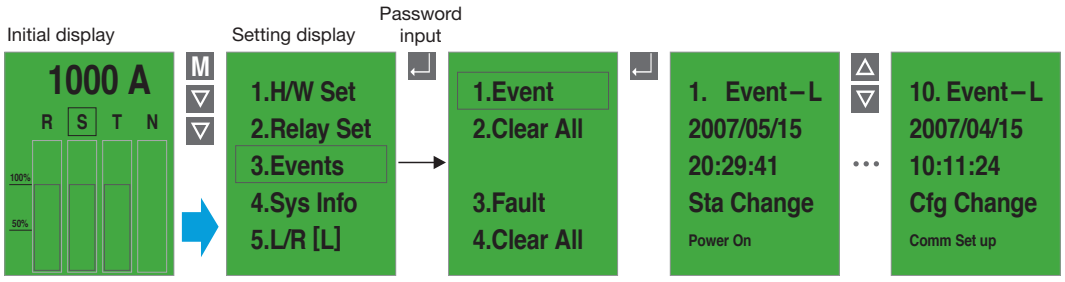

Fault information display

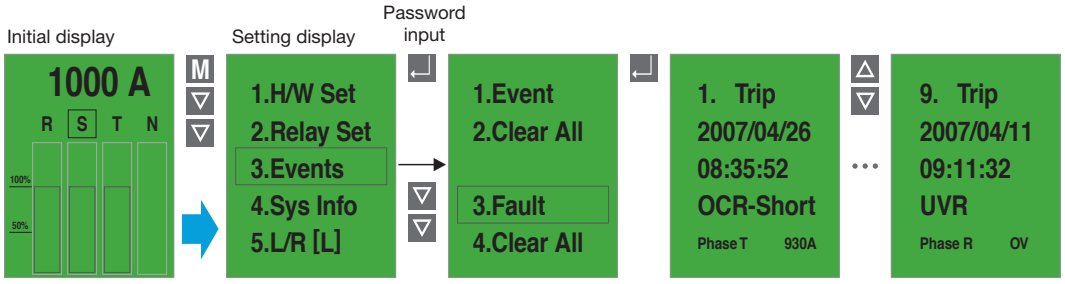

* Fault information is recorded only when there is external control power

System information

P and S type can indicate information as followings with the information of the ACB.
- Present time: year/month/date/hour/minute/ms
- ACB current ratings
- N-phase current ratings: 100%
- Frequency information: 60Hz/50Hz
- Closing numbers of breaker: CB ON numbers
- Trip relay operating time: OCR ON time
- ON time of breaker: CB ON time
- F/W ver. information

System information display

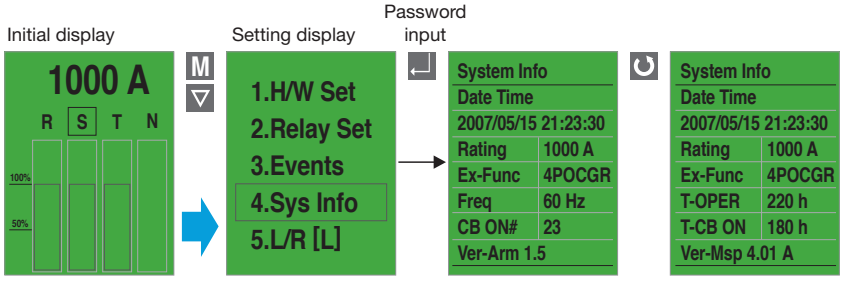

System block diagram

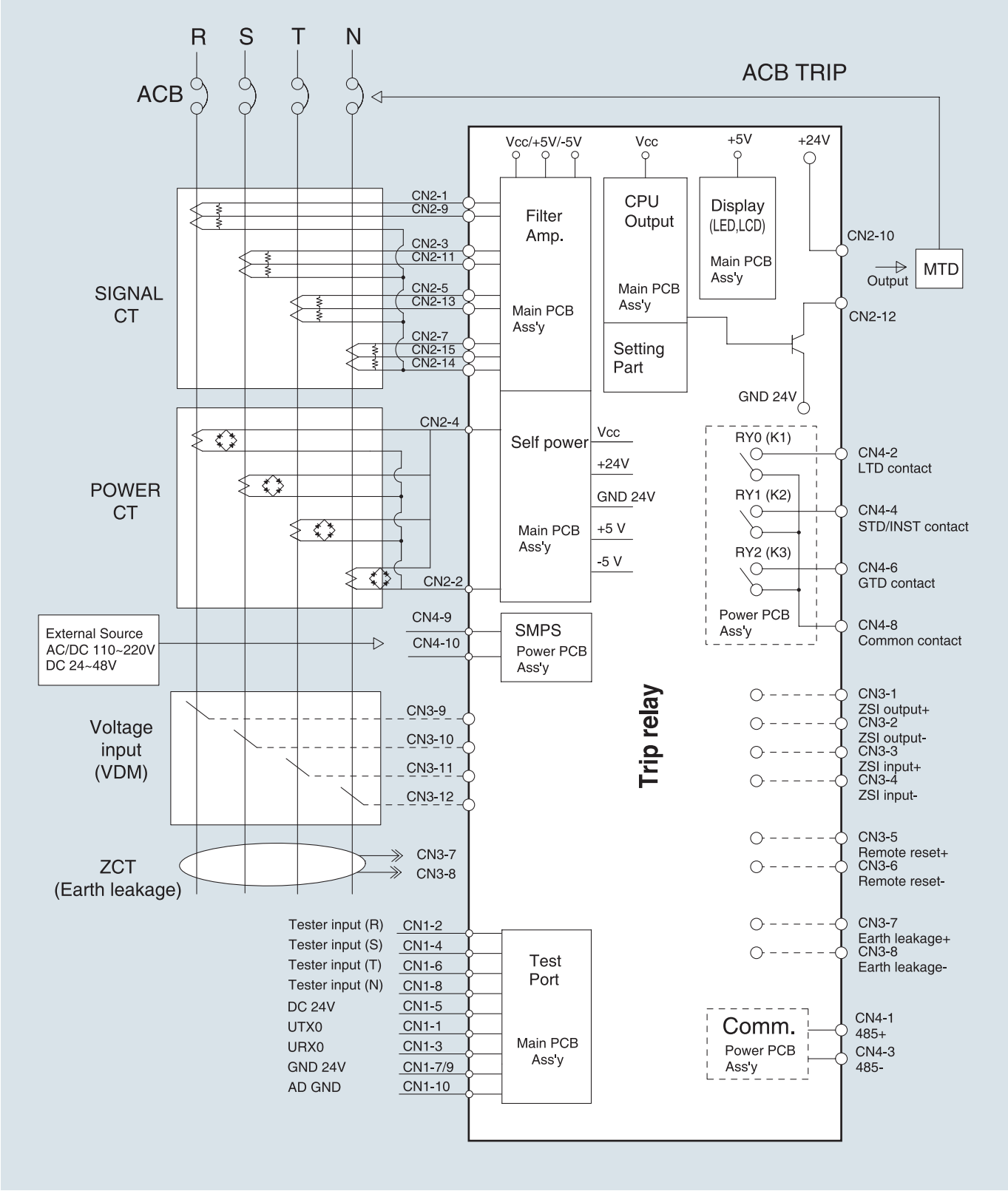

Accessories

Susol · Metasol

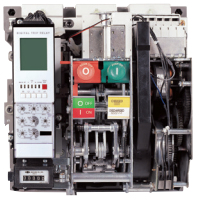



Mounting	Accessories		AH		AS		AN		Remark	Page
			Standard	Option	Standard	Option	Standard	Option		
Internal	SHT1	Shunt Coil	●	○	●	○	●	○	*	70
	SHT2	Double Shunt Coil		○		○			*	71
	CC	Closing Coil	●	○	●	○	●	○	*	72
	M	Motor	●	○	●	○	●	○	*	73
	CS1	Charge Switch	●	○	●	○	●	○	*	73
	CS2	Charge Switch Communication		○		○		○	*	73
	UVT	Under Voltage Trip Device		○		○		○	*	74
	AL	Trip Alarm Contact		○		○		○	*	75
	MRB	Manual Reset Button		○		○		○	*	75
	RES	Remote Reset Switch		○		○		○	*	76
	RCS	Ready to Close Switch		○		○		○	*	76
	C	Counter	●			○		○	*	83
	AX	Auxiliary Switch		○		○		○	*	77
	TM	Temperature Alarm		○		○		○	*	94
External	K1	Key Lock		○		○		○	*	78
	K2	Key Interlock Set		○		○		○	*	78
	K3	Double Key Lock		○		○		○	*	79
	B	On/Off Button lock		○		○		○	*	79
	LH	Lifting Hook		○		○		○		79
	CTD	Condenser Trip Device		○		○		○		79
	ATS	Automatic Transfer Switch Controller		○		○		○		81
	DC	Dust Cover		○		○		○		83
	DF	Door Frame		○		○		○		87
	OT	OCR Tester		○		○		○		82
	J	Manual Connector		○		○	●		*	
	A	Automatic Connector	●		●		○	*		

* Seperate purchasing is not allowed. Each item should be purchased with the main body.



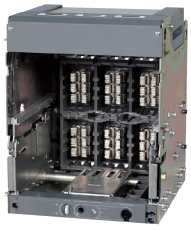

Mounting		Accessories	AH		AS		AN		Remark	Page
			Standard	Option	Standard	Option	Standard	Option		
Trip relay	N	N type		○		○		○	*	44
	A	A type		○		○		○	*	46
	P	P type		○		○		○	*	48
	S	S type		○					*	50
	VM	Voltage Module		○		○		○	**	54
	ZCT	ZCT for the earth leakage		○		○		○		
Cradle	SBC	Shorting "b" Contact		○		○		○		89
	MI	Mechanical Interlock		○		○		○		85
	ST	Safety Shutter		○		○		○	*	86
	STL	Safety Shutter Lock		○		○		○		86
	MIP	Miss Insertion Prevent Device		○		○		○		92
	MOC	Mechanical Operated Cell Switch		○		○		○		84
	CEL	Cell Switch		○		○		○		88
	DI	Door Interlock		○		○		○		85
	ZAS	Zero Arc Space	●			○			*	89
	SC	Safety Control Cover	●		●		●		***	90
	BSP	Body Supporter		○		○		○	*	90
	RI	Racking Interlock		○		○		○		91
	PL	Pad Lock/ Position Lock	●		●		●		*	91
	IB	Interphase Barrier	●			○		○	*	87
	UDC	UVT Time Delay Controller		○		○		○		93
	ADP	Compatible Adapter		○		○		○		
Other	RPH	Reverse Phase ACB		○		○		○		
	DUM	Dummy ACB		○		○		○		
	VAD	Various Connection Type		○		○		○		25
	RCO	Remote I/O		○		○		○		95
	PC	Profibus-DP comm. module		○		○		○		65

* Seperate purchasing is not allowed. Each item should be purchased with the main body.
** Voltage module should be purchased with P/S type trip relay.
*** It is available only when the control block is in the mode of auto-connection.

Option

55223460402

HANDLE ASS'Y, DRAW, LONG

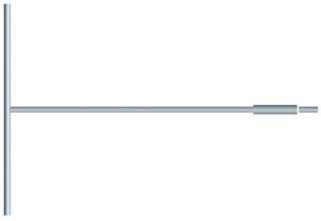

55223460404

HANDLE ASS'Y, DRAW, LONG, AL-D, E, F, G, HYX

Shunt Coil [SHT1]



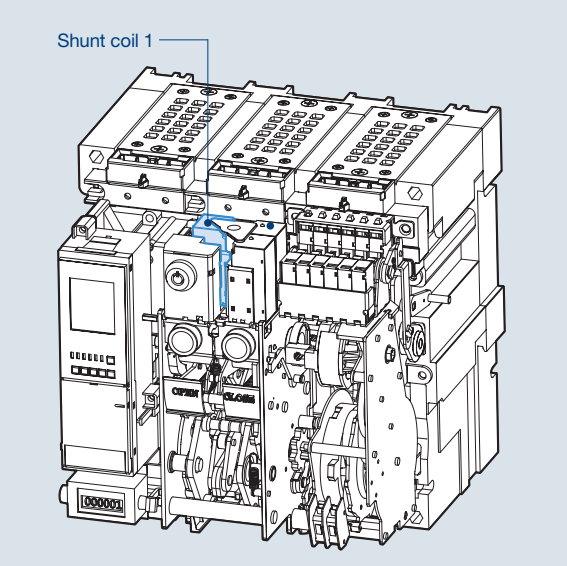

- SHT1 is a control device which trips a circuit breaker from remote place, when applying voltage continuously or instantaneously over 200ms to coil terminals(C1, C2).
- When UVT coil is installed, its location is changed.

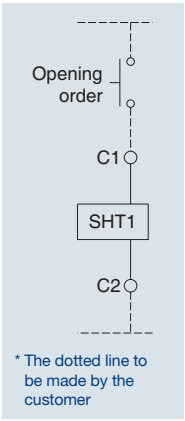

Wiring Diagram

1. Rated voltage and characteristics of trip coil

Rated voltage (Vn)		Operating voltage range (V)	Power consumption (VA or W)		Trip time (ms)
DC (V)	AC (V)		Inrush	Steady-state	
24~30	-	0.7~1.1 Vn	200	5	Less than 40ms
48~60	48	0.7~1.1 Vn			
100~130	100~130	0.7~1.1 Vn			
200~250	200~250	0.7~1.1 Vn			
-	380~480	0.7~1.1 Vn			

Note) Operating voltage range is the min. rated voltage standard for each rated voltage(Vn).

2. Specification of the wire

- Refer to the below table regarding the length and specification of wire when using trip coil with DC 24~30V or DC / AC 48~60V of rated voltage.

The maximum wire length

Wire type		Rated voltage (Vn)			
		DC 24~30V		DC / AC 48V	
		#14 AWG (2.08mm²)	#16 AWG (1.31mm²)	#14 AWG (2.08mm²)	#16 AWG (1.31mm²)
Operating voltage	100%	95.7m	61m	457.8m	287.7m
	85%	62.5m	38.4m	291.7m	183.2m

Double Shunt Coil [SHT2]



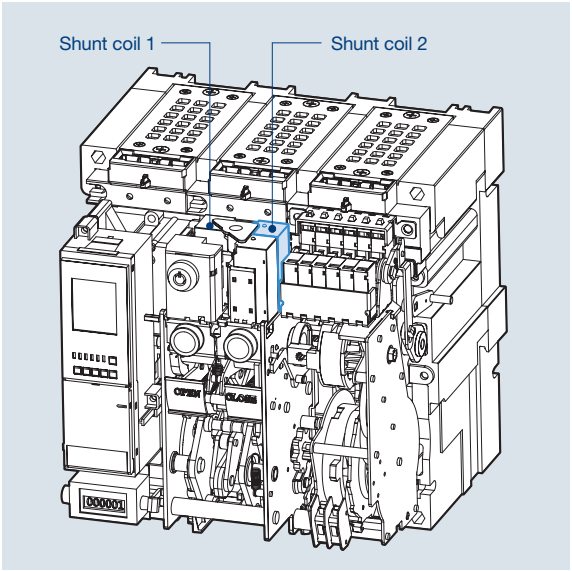

- SHT2 is a control device which trips a circuit breaker doubly from the outside. When SHT1 doesn't operate normally, it can trip a circuit breaker safely.
- Shunt coil 1: Install it at existing location.
- Shunt coil 2: Install it on the right side of the Shunt coil 1
- It is not available with UVT coil when installing double shunt coil.

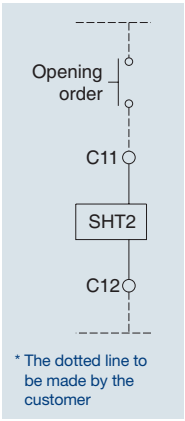

Wiring Diagram

1. Rated voltage and characteristics of trip coil

Rated voltage (Vn)		Operating voltage range (V)	Power consumption (VA or W)		Trip time (ms)
DC (V)	AC (V)		Inrush	Steady-state	
24~30	-	0.7~1.1 Vn	200	5	Less than 40ms
48~60	48	0.7~1.1 Vn			
100~130	100~130	0.7~1.1 Vn			
200~250	200~250	0.7~1.1 Vn			
-	380~480	0.7~1.1 Vn			

Note) Operating voltage range is the min. rated voltage standard for each rated voltage(Vn).

2. Specification of the wire

- Refer to the below table regarding the length and specification of wire when using trip coil with DC 24~30V or DC / AC 48~60V of rated voltage.

The maximum wire length

Wire type		Rated voltage (Vn)			
		DC 24~30V		DC / AC 48V	
		#14 AWG (2.08mm²)	#16 AWG (1.31mm²)	#14 AWG (2.08mm²)	#16 AWG (1.31mm²)
Operating voltage	100%	95.7m	61m	457.8m	287.7m
	85%	62.5m	38.4m	291.7m	183.2m

Closing Coil [CC]



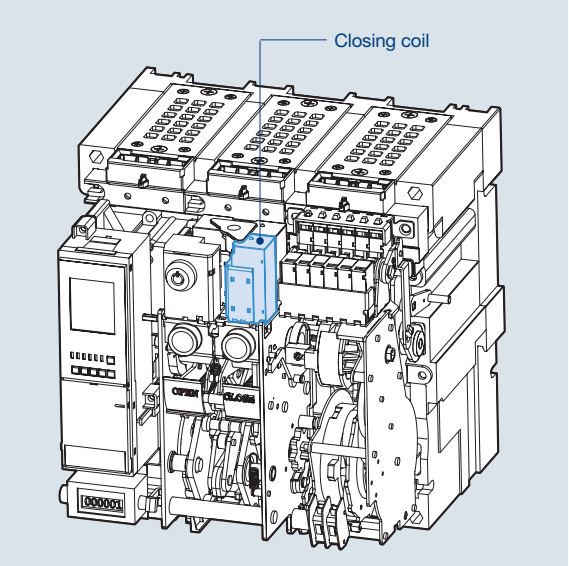

- It is a control device which closes a circuit breaker, when the voltage is applied continuously or instantaneously over 200ms to the coil terminals (A1, A2).

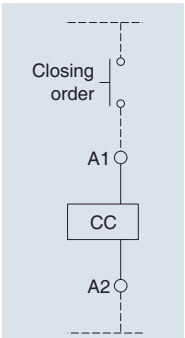

Wiring Diagram

1. Rated voltage and characteristics of Closing coil

Rated voltage (Vn)		Operating voltage range (V)	Power consumption (VA or W)		Shunt time (ms)
DC (V)	AC (V)		Inrush	Steady-state	
24~30	-	0.85~1.1 Vn	200	5	Less than 80ms
48~60	48	0.85~1.1 Vn			
100~130	100~130	0.85~1.1 Vn			
200~250	200~250	0.85~1.1 Vn			
-	380~480	0.85~1.1 Vn			

Note) Operating voltage range is the min. rated standard for each rated voltage (Vn).

2. Specification of the wire

- Refer to the below table regarding the len gth and specification of wire when using trip coil with DC 24~30V or DC / AC 48~60V of rated voltage.

The maximum wire length

Wire type		Rated voltage (Vn)			
		DC 24~30V		DC / AC 48V	
		#14 AWG ($2.08mm^2$)	#16 AWG ($1.31mm^2$)	#14 AWG ($2.08mm^2$)	#16 AWG ($1.31mm^2$)
Operating voltage	100%	95.7m	61m	457.8m	287.7m
	85%	62.5m	38.4m	291.7m	183.2m

Motor [M]

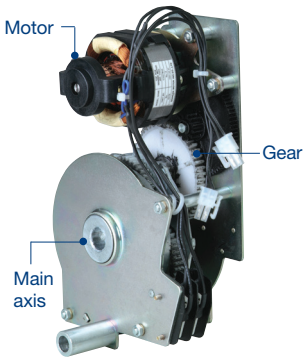

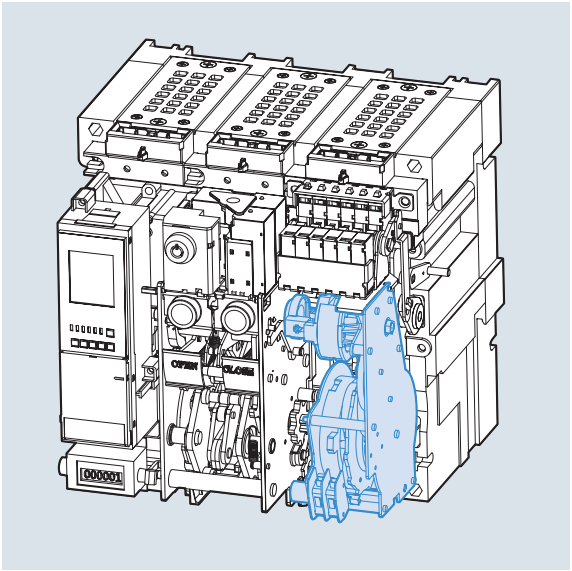

- Charge the closing spring of a circuit breaker by the external power source. Without the external power source, charge manually.
- Operating voltage range (IEC 60947) 85%~110%Vn

Input voltage (V)	DC 24~30V	AC/DC 48~60V	AC/DC 100~130V	AC/DC 200~250V	AC 380V	AC 440~480V
Load current (max.)	5A	3A	1A	0.5A	0.3A	0.3A
Starting current (Max.)	5 times of load current					
Load rpm (Motor)	15000 ~ 19000 rpm					
Charge time	Less than 5sec.					
Dielectric strength	2kV/min					
Using temperature range	-20˚~ 60˚					
Using humidity range	Max. RH 80% (No dew condensation)					
Endurance	15,000 cycle (Load connection, 2 times/min)					
Charge switch	10A at 250VAC					

Charge Switch [CS1]
Charge Switch Communication [CS2]

- It is a built-in contact which sends the signal to the outside, when motor charging is completed. (2a)
- It has a “1a” contact for communication and the other “1a” contact for complete charging.
- When using an extra communication module (Remote I/O), the state of contacts can be displayed through the network.
- 10A at 250VAC

Under Voltage Trip device [UVT]

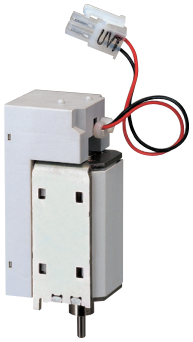

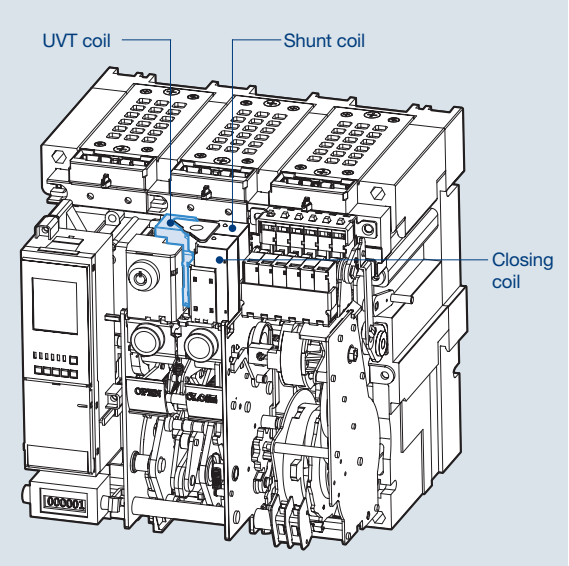

- If the voltage of the main or the control power is under voltage, UVT which is installed inside of the breaker breaks the circuit automatically.
  Please connect with UVT time-delay device in order to present the time-delay function because UVT is technically instantaneous type.
- The closing of a circuit breaker is impossible mechanically or electrically if control power not supplied to UVT.
  To close the circuit breaker, 65~85% of rated voltage should be applied to both terminals of UVT coil (D1, D2).
- When using UVT coil, the double trip coil can not be used, and the location of trip coil is changed.

1. Rated voltage and characteristics of UVT coil

Rated voltage (Vn)		Operating voltage range (V)		Power consumption (VA or W)		Trip time (ms)
DC (V)	AC (V)	Pick up	Drop out	Inrush	Steady-state	
24~30	-	0.65~0.85 Vn	0.4~0.6 Vn	200	5	Less than 50ms
48~60	48					
100~130	100~130					
200~250	200~250					
-	380~480					

Note) Operating voltage range is the min. rated standard for each rated voltage (Vn).

2. Specification of the wire

- Refer to the below table regarding the length and specification of wire when using trip coil with DC 24~30V or DC/AC 48~60V of rated voltage.

The maximum wire length

		Rated voltage (Vn)			
		DC 24~30V		DC / AC 48V	
Wire type		#14 AWG ($2.08mm^2$)	#16 AWG ($1.31mm^2$)	#14 AWG ($2.08mm^2$)	#16 AWG ($1.31mm^2$)
Operating voltage	100%	48.5m	30.5m	233.2m	143.9m
	85%	13.4m	8.8m	62.5m	39.3m

Note) In case of using UVT coil, the location of Shunt coil is changed.

Trip Alarm Contact [AL]

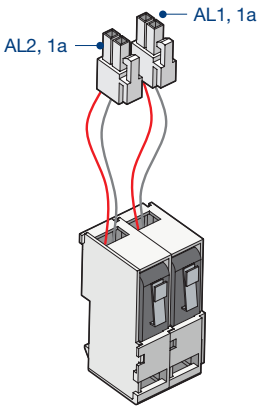

- When a circuit breaker is tripped by OCR which operates against the fault current (Over Current Relay), Trip Alarm switch provides the information regarding the trip of circuit breaker by sending the electrical signal from the mechanical indicator on front cover of main circuit breaker or internal auxiliary switch. (Installed at the inside of circuit breaker)
- When a circuit breaker tripped by fault current, a mechanical trip indicator (MRB, Manual Reset Button) pops out from the front cover and the switch (AL) which sends control signal electrically is conducted to output the information occurred from fault circuit breaker.
- MRB and AL can be operated only when tripping by OCR, but doesn't be operated by Off button and OFF operation of trip coil.
- To re-close a circuit breaker after a trip, press MRB to reset it for closing.
- 2pcs of electrical trip switch (AL1, AL2, 1a) are provided (Option)
- Trip alarm contact and MRB(Manual reset bottom) need to be purchased together.

1. Electrical characteristics of trip alarm contact

Rated voltage (V)	Non-inductive load (A)		Inductive load (A)		Inrush current
	Resistive load	lamp load	Inductive load (A)	Motor load	
8V DC	11	3	6	3	MAX. 24A
30V DC	10	3	6	3	
125V DC	0.6	0.1	0.6	0.1	
250V DC	0.3	0.05	0.3	0.05	
250V AC	11	1.5	6	2	

Manual Reset Button [MRB]

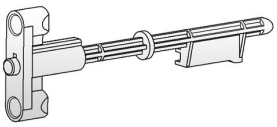

- It is a function which resets a circuit breaker manually when a circuit breaker is tripped by OCR.
- When a circuit breaker tripped by fault current, a mechanical trip indicator (MRB, Manual Reset Button) pops out from the front cover and the switch (AL) which sends control signal electrically is conducted to output the information occurred from fault circuit breaker.
- MRB can be operated only by OCR but not by OFF operation of circuit breaker. To re-close a circuit breaker after a trip, press MRB to reset it for closing.

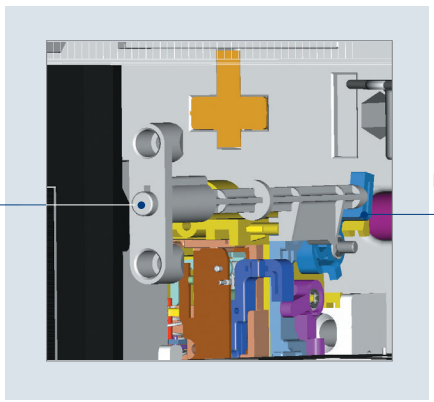

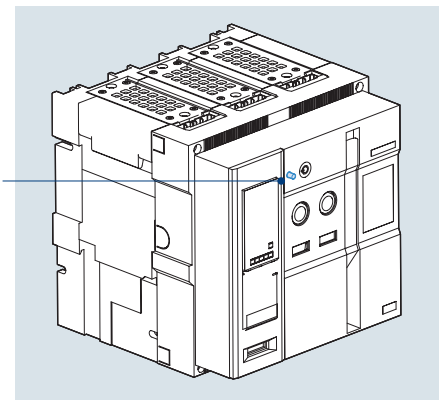

Note) The manual reset button is protruded in the event of trip.

Remote Reset Switch [RES]

- Following tripping, this function resets the "fault trip" alarm contacts (AL) and the mechanical indicator (MRB) and enables circuit breaker closing.
  Push button switch: AC 125V 10A, AC 250V 6A, DC 110V 2.2A, DC 220V 1.1A Resistive load
- In case of auto reset type circuit breaker
  Following tripping, a reset of Manual Reset Button (MRB) or Remote Reset Switch (RES) is no longer required to enable circuit breaker closing.
  The mechanical indicator (MRB) and electrical indicator (AL) remain in fault position until the reset button is pressed.
- AL2 and RES are alternative.

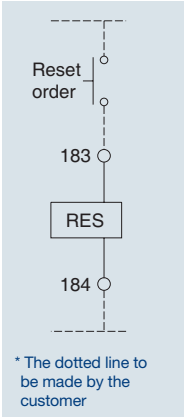

Wiring Diagram

1. Rated voltage and rated current of RES

Rated voltage	Operating current (Max.)		Operating time	Wire spec.
AC/DC 100~130V	AC	6A	Less 40ms	#14 AWG (2.08 mm²)
	DC	5A		
AC/DC 200~250V	AC	3A		#16 AWG (1.31 mm²)
	DC	2.5A		

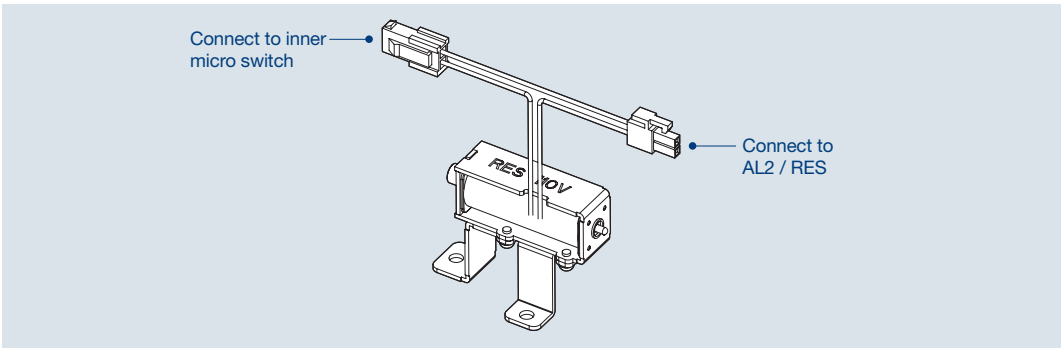

Ready to Close Switch [RCS]

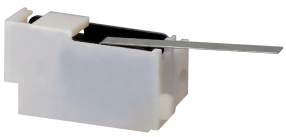

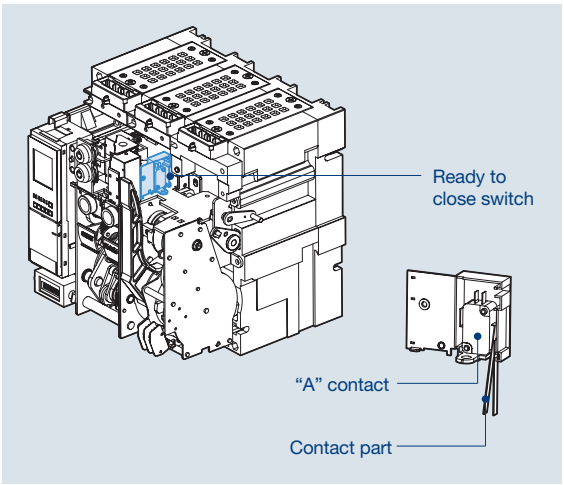

- It interlocks with mechanism of circuit breaker.
- It indicates the status that the circuit breaker is ready to do closing operation.
- When mechanism is in OFF position or in Charge, contact is output with "ON" and it indicates that mechanism can be closed.

Classification	Standard		Remark
Contactor Capacity	250/125 Vac	10 A	
	250 Vdc	0.3 A	
	125 Vdc	0.6 A	
	48 Vdc	3 A	
	24 Vdc	5 A	

Auxiliary switch [AX]

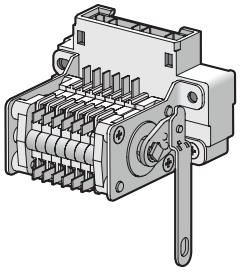

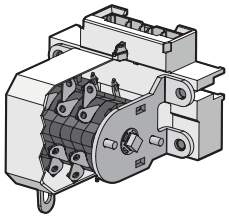

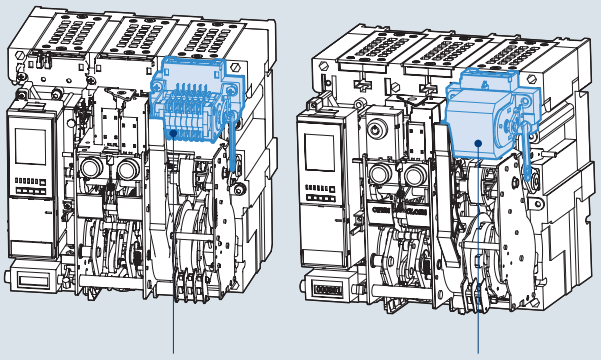

- It is a contact used to monitor ON / OFF position of ACB from remote place.

AUX. contact & charging types	
AX	Standard OFF charge 3a3b
AC	Standard ON charge 3a3b
BX	Standard OFF charge 5a5b
BC	Standard ON charge 5a5b
HX	High capacity OFF charge 5a5b
HC	High capacity ON charge 5a5b
CC	Standard ON charge 6a6b
JC	High capacity ON Charge 6a6b
GX	High capacity OFF charge 3a3b
GC	High capacity ON charge 3a3b

Standard classification

Standard		High capacity	
2000, 5000AF	4000, 6300AF	2000, 5000AF	4000, 6300AF
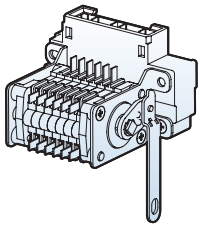		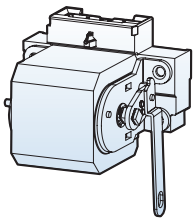	

Classification			Standard		High capacity		Remark
			Resistive load	Inductive load	Resistive load	Inductive load	
Minimum current			DC24V, 5mA		DC5V, 1mA		
Contact capacity	AC	490V	5A	2A	5A	2.5A	
		250V	10A	6A	10A	10A	
		125V	10A	6A	10A	10A	
	DC	250V	0.3A	0.3A	3A	1.5A	
		125V	0.6A	0.6A	10A	6A	
		30V	10A	6A	10A	10A	
No. of Contact that can be used		AX	3a3b	-	-	-	Standard charging type
		BX	5a5b	-	-	-	
		HX	-	-	5a5b	-	
		GX	-	-	3a3b	-	
		AC	3a3b	-	-	-	Rapid auto-reclosing charging type
		BC	5a5b	-	-	-	
		CC	6a6b	-	-	-	
		HC	-	-	5a5b	-	
		JC	-	-	6a6b	-	
		GC	-	-	3a3b	-	

Key Lock [K1]



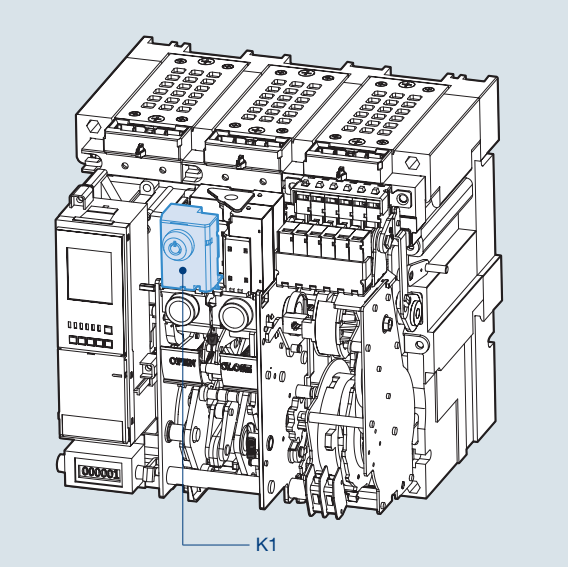

- It is a device for locking which prevents a certain circuit breaker from being operated by user's discretion when two or more circuit breakers are used at the same time.
- K1: Preventing mechanical closing

Key Interlock Set [K2]

Wiring

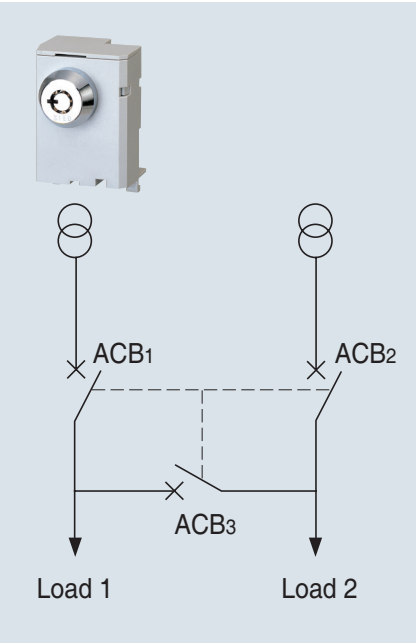

- 3 circuit breakers can be arranged for the continuous power supply to the load side and be interlocked mutually by using Key Lock embedded in each circuit breaker.

ACB-1	ACB-2	ACB-3	Status	
			LOAD1	LOAD2
●	●	●	OFF	OFF
●	○	○	ON	ON
○	●	○	ON	ON
○	○	●	ON	ON
●	●	○	OFF	OFF
●	○	●	OFF	ON
○	●	●	ON	OFF

○: Release ●: Lock

Double Key Lock [K3]



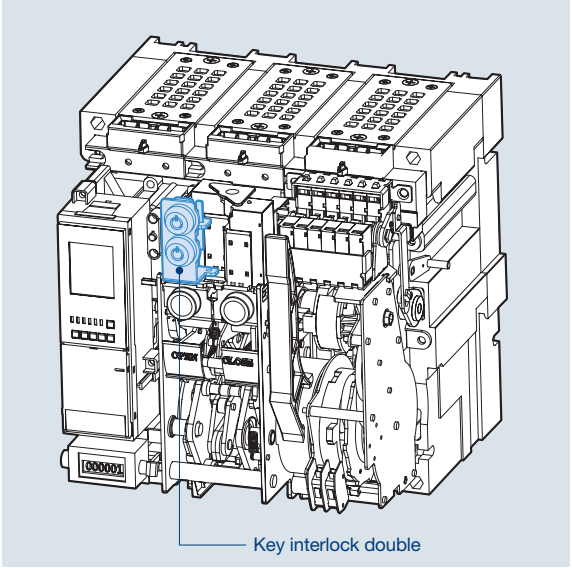

- When only two keys are released at the same time, circuit breakers operate. Handling method is same as K1.

ON/OFF Button Lock [B]



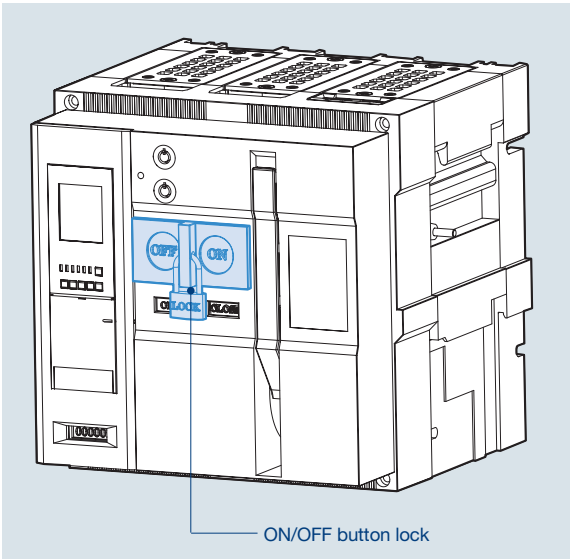

- It is to prevent manual operation of ACB's closing/tripping button due to user's wrong handling.
- It is not possible to handle ON/OFF operation under the "Button lock" status.

Note) Padlocks(Ø5 ~ Ø6) are not supplied.

Lifting Hook [LH]



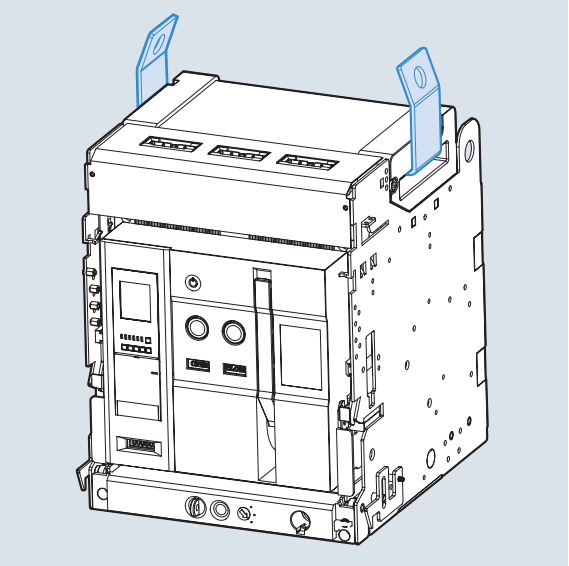

- It is a device to make an ACB easy to shift.
- Please hang it to both handles of the arc cover.

Condenser Trip Device [CTD]



- It gets a circuit breaker tripped electrically within regular time when control power supply is broken down and is used with Shunt coil, SHT. In case there is no DC power, It can be used as the rectifier which supplies DC power to a circuit breaker by rectifying AC power.

Ratings

Ratings	Specification	
Model	CTD-100	CTD-200
Rated input voltage (V)	AC 100/110	AC 200/220
Frequency (㎐)	50/60	50/60
Rated charge voltage (V)	140/155	280/310
Charging time	Within 5s	Within 5s
Trip possible time	Over 3 min	Over 2 min
Range of Input voltage (%)	85~110	85~111
Condenser capacity	400㎌	160㎌

External dimension

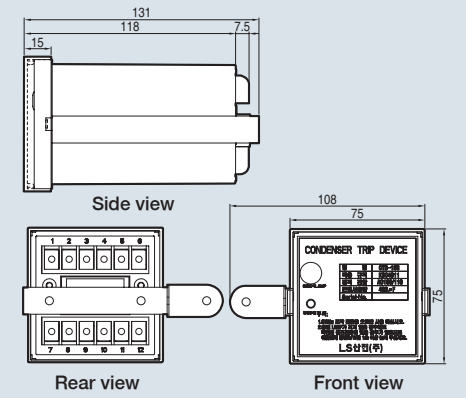

Circuit diagram

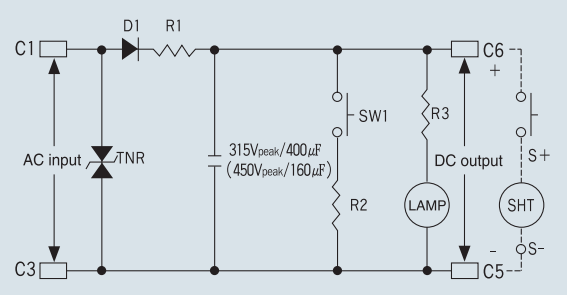

Automatic Transfer Switch Controller [ATS]

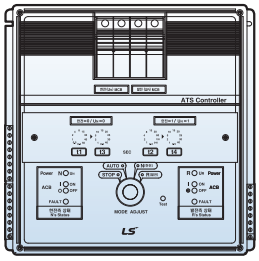

Ratings

Model type	ATSC-110	ATSC-220
Rated voltage	AC 110V	AC 220V
Voltage range	AC 93.5 (±5%) ~126.5V (±5%)	AC 187 (±5%) ~ 253V (±5%)
Frequency	50Hz/60Hz	
Power consumption (apparent power)	15.4W	
4-location switch (stop, N, R, Auto)	■	■
Time setting (t1~t4)	■	■
Fault function (OCR/Circuit breaker trouble)	■	■
Output contact (Auto, Load burden)	■	■

- t1: The delayed time from when UN (power supply of electric company) is tripped to when generator start-up signal contact is closed. (t_1: 0.2, 0.5, 1, 2, 4, 8, 15, 30, 40, 50secs)
- t2: The delayed time from when UN is closed to when ACB_2 is tripped.
  (t_2: 0.2, 1, 2, 4, 8, 15, 30, 60, 120, 240secs)
- t3: The delayed time from when ACB_1 is tripped to when ACB_2 is closed.
  (t_3: 0.5, 1, 2, 5, 10, 15, 20, 25, 30, 40secs)
- t4: The delayed time from when ACB_2 is tripped to when ACB_1 is closed.
  (t_4: 0.5, 1, 2, 5, 10, 15, 20, 25, 30, 40secs)
- Stop-mode: This mode is for compulsory trip of ACB_1(electric power company) or ACB_2 (power station) when UN (power supply of electric power company) or UR (power supply of power station) is available
  *UN or UR should be kept in ON position
- N-mode: This mode is for compulsory closing of ACB_1 when UN is available.
  * it does not matter to be ON or OFF position of UR and if converting to N-mode while using UR, generator start-up signal contact is opened.
- R-mode: This mode is for compulsory closing of ACB_2 during the use of UR regardless of that UN is available or not.
- Auto-mode: This mode is for transferring a circuit breaker automatically to available power supply of UN or UR. In short, it trips the circuit breaker where power supply is not available and it close the circuit breaker where power supply is available.

OCR Tester [OT]



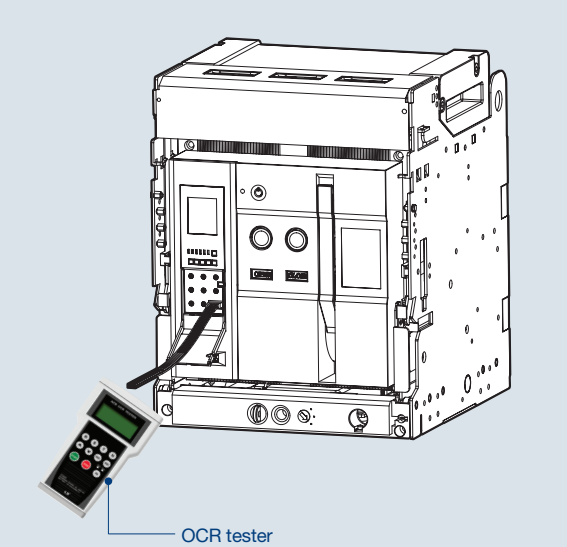

- It is a device which can test for the operation of Trip Relay under no power condition.

1. Maximum 17 times rated current can be inputted.
2. It is possible to enter the current value and phase on each of R/S/T/N
3. Frequency is adjustable.
4. It is available to test for long time delay/short time delay/instantaneous /ground fault.

Configuration



R S T N	R, S, T, N phase signal input
▲ ▼	Increase/Decrease signal input
ENT. ESC	Signal setting/Delete
START STOP	Waveform generation/Stop
50Hz 60Hz Hz	Select frequency

Dust Cover [DC]

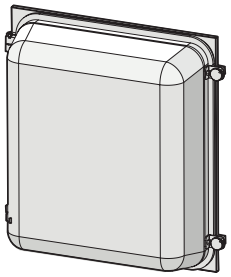

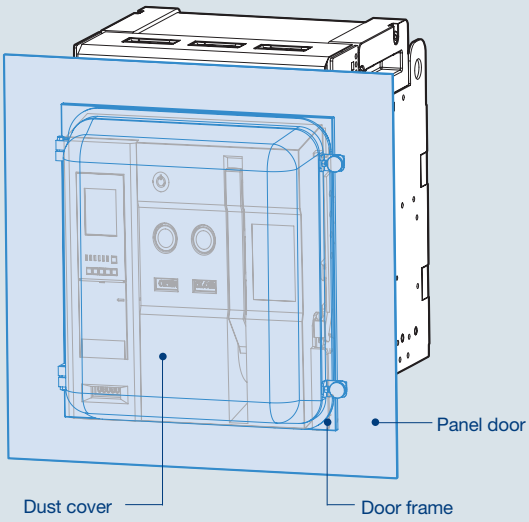

- Attach it to the door frame.
- It protects the product dust and moisture that may affect the operation of the instrument at the same time (IP54) which may cause fault operation and enhances the sealing degree by being mounted to protrude type of panel.
- It is transparent so that the front side of ACB is visible and the Cover can be opened/closed even if ACB is drawn out to until TEST position.

Counter [C]



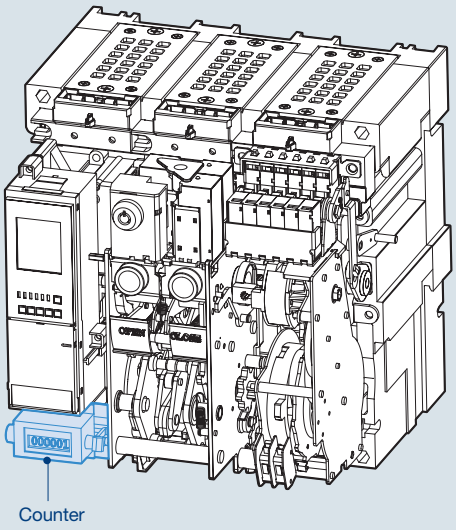

- It displays the total number of ON/OFF operation of ACB.

Mechanical Operated Cell Switch [MOC]

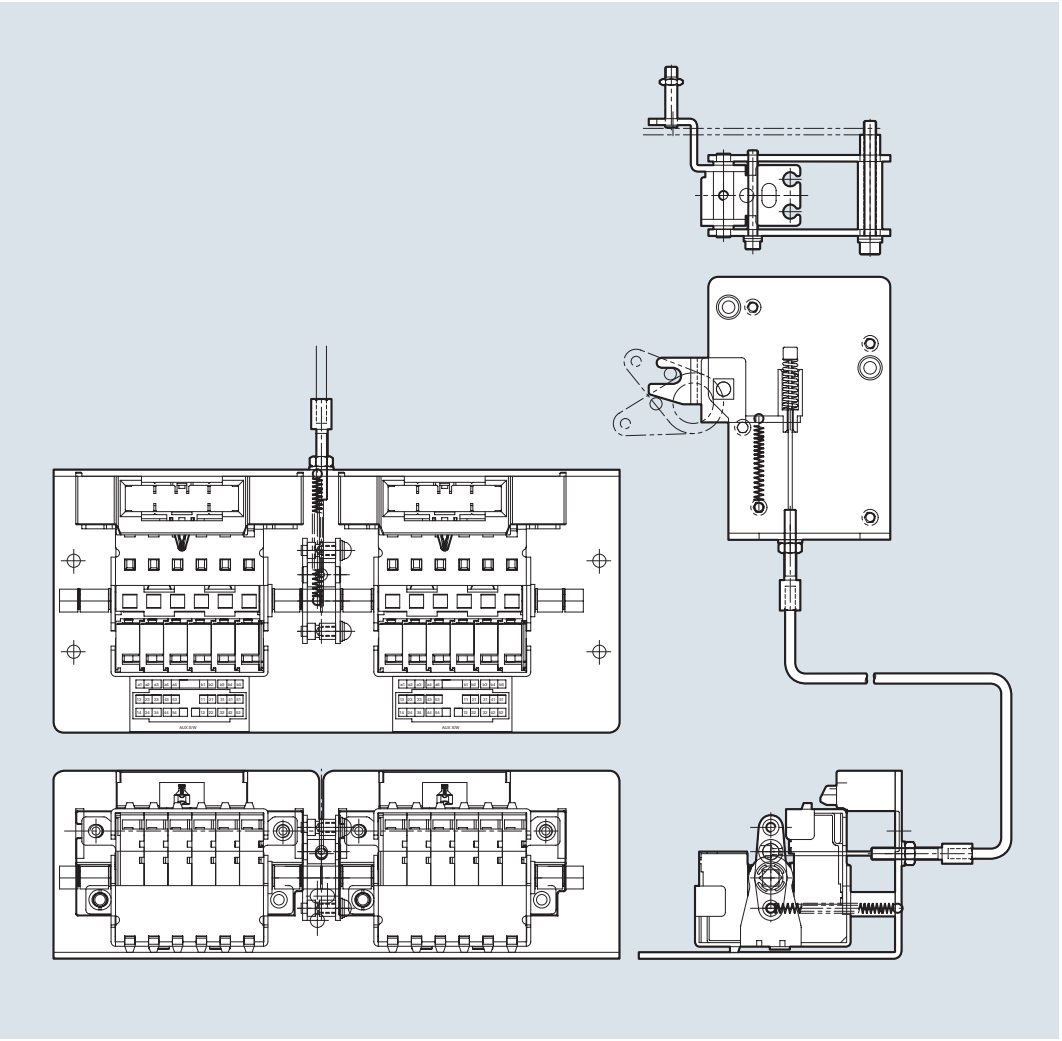

- It is the contact (10a10b) which displays the ON/OFF condition of ACB.
  It mechanically operates only when the breaker is "CONNECTED" position.
  A standard type and a high capacity type is available.
- The contact capacity is as same as the ratings of aux. contacts.
- When MOC link is installed to cradle, MOC can be equipped with the inside of panel.

Mechanical Interlock [MI]

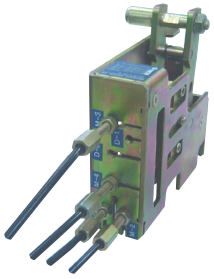

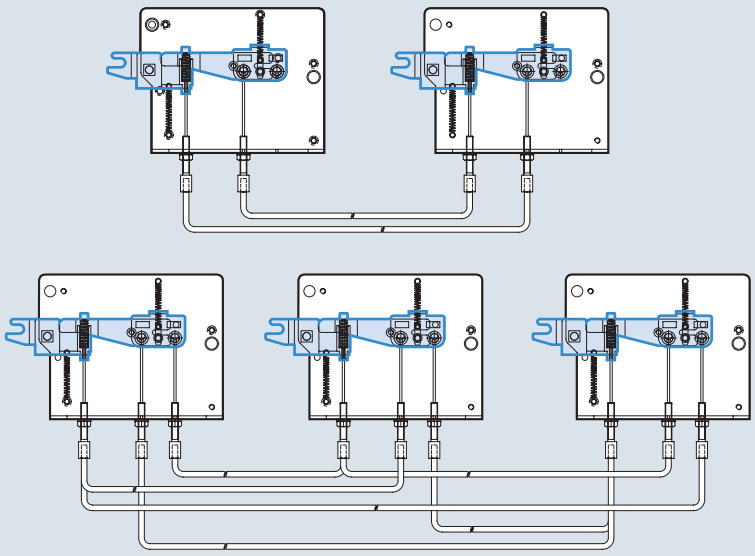

- It is used to interlock closing and trip between two or three breakers mechanically so as to prevent unintended operation at the same time.
- Wire type interlock can be applied upto 3 breakers

Door Interlock [DI]

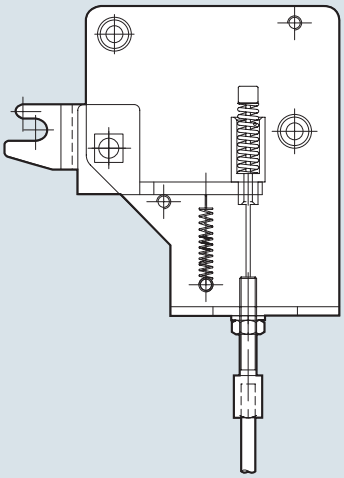

Install on the side plate of ACB cradle

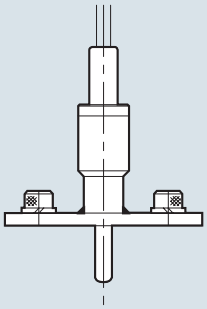

Install on the door of panel

- It is a safety device which does not allow the panel door to open when a circuit breaker is in the “ON” position.

Safety Shutter [ST]



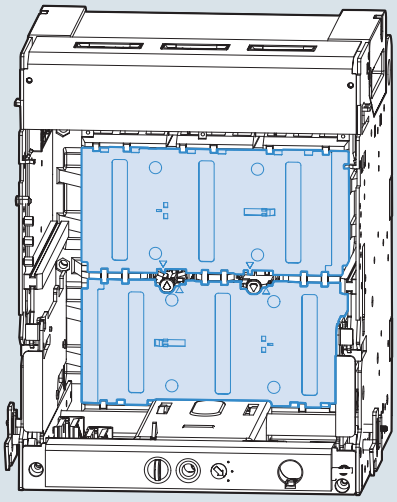

- It is the automatic safety device to protect the connectors of main circuit by cutting off dangerous contact from outside while the breaker is drawn out. When the ACB is drawn in, the shutter is automatically opened.
- There are 4 types of Safety Shutter and they are divided as shown in figure below.

The types of safety shutter plate	
2000/5000AF, 3P	4000/6300AF, 3P
	
2000/5000AF, 4P	4000/6300AF, 4P
	

Safety Shutter Lock [STL]

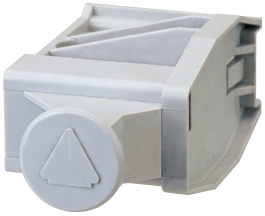

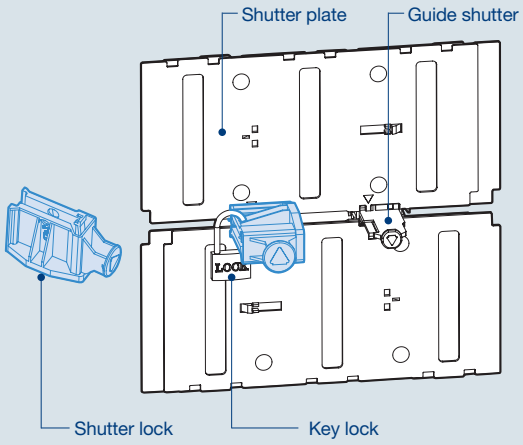

- It is a locking device which prevents safety shutter from being opened when it is closed.
  → If shutter lock is connected with guide shutter, the guide shutter can not be pushed structurally. Thus, it is not available to open the safety shutter.

Note) Padlocks (Ø5 ~ Ø6) are not supplied.

Door Frame [DF]



Fixed type



Draw-out type

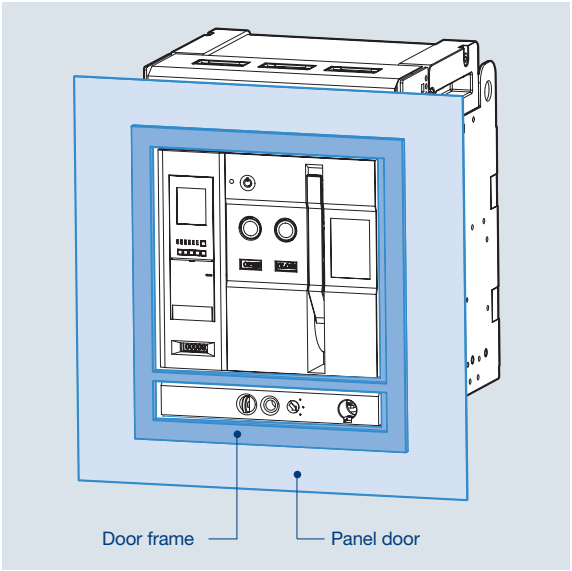

- When structuring the embedded type of ACB panel, it protects the protrude front of ACB and the cutting side of panel door by attaching it to the panel door.

Interphase Barrier [IB]



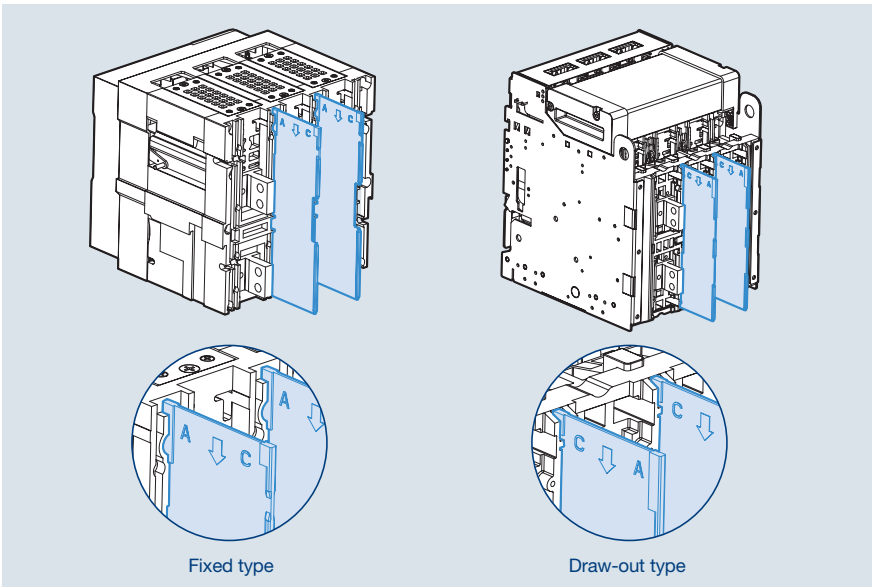

- Interphase barrier prevents the arc which may arise and result in short-circuit between phases in advance
- As “C” stands for “CRADLE”, install the Interphase barrier in the direction of “C” in case of Draw-out type.
- As “A” stands for “ACB main frame”, install the Interphase barrier in the direction of “A” in case of Fixed type.

Cell Switch [CEL]

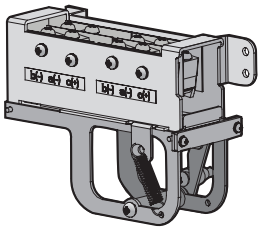

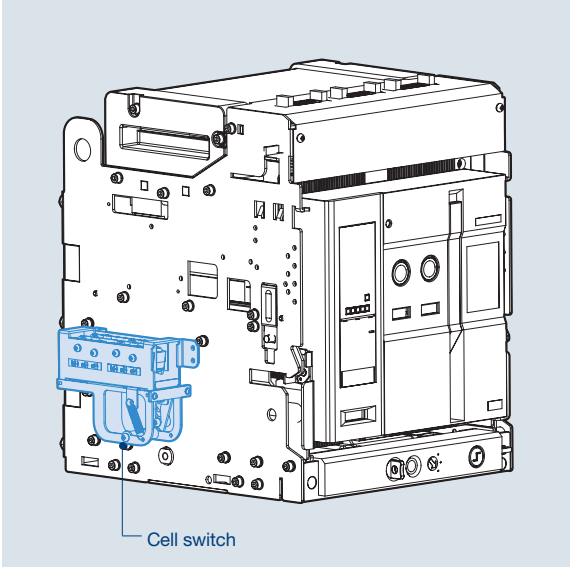

- It is a contact which indicates the present position of ACB. (CONNECTED, TEST, DISCONNECTED)

<Contact configuration>
4C: 1Disconnected +1Test +2Connected
8C: 2Disconnected +2Test +4Connected

※ Contact configuration can be changeable if necessary.

ACB position			DISCONNECTED		CONNECTED
Draw-in and draw-out position			DISCONNECTED	TEST	CONNECTED
Contact operation	CL-C (Connected)		OFF		ON
	CL-T (Test)		OFF	ON	
	CL-D (Disconnected)		ON	OFF	
Contact capacity	Voltage(V)		Resistive load		Inductive load
	AC	460V	5		2.5
		250V	10		10
		125V			
	DC	250V	3		1.5
		125V	10		10
		30V	10		10
Contact number			4C		

Terminal (4C, 8C)

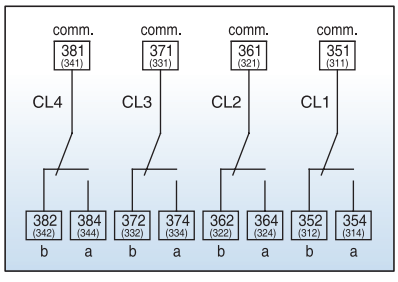

4C attached to the right side of cradle

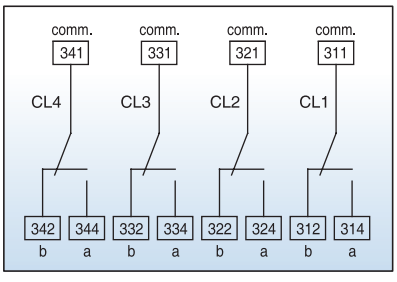

4C attached to the left side of cradle

Shorting “b” Contact [SBC]

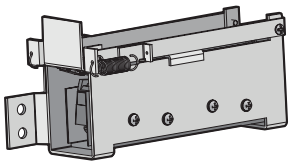

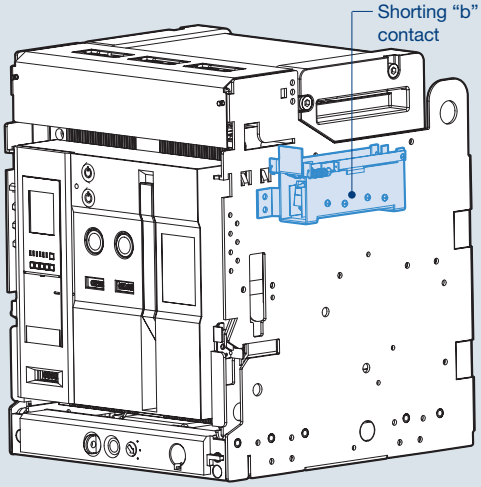

- It is the contact which keeps the external control circuit in normal by Aux. contact which disconnects “Axb” when ACB is moved from CONNECTED position to TEST position. The number of “shorting b-contact” corresponds to the number of “Axb” (4b)

Contact condition (Link between Axb and shorting “b” contact)

ACB position \ ACB condition	Close position [Auxiliary contact(Axb):OFF]	Open position [Auxiliary contact(Axb):ON]
Connected position (Shorting b contact : OFF)	OFF Axb SBC	ON Axb SBC
Test position (Shorting b contact : ON)	OFF Axb SBC	ON Axb SBC

Zero Arc Space [ZAS]



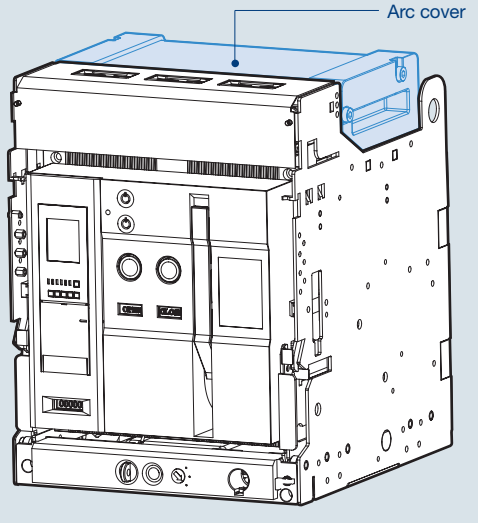

- Arc which may arise while breaking fault current is extinguished first by Arc chute in main body of circuit breaker and then completely extinguished by Arc cover.
  By preventing arc from exposing to the outside, it protects itself from all kinds of accidents.
- It is categorized into 8 types by ratings and poles.

Ampere frame	Cover length (mm)
2000AF 3P	281.4
2000AF 4P	366.4
4000AF 3P	359.4
4000AF 4P	474.4
5000AF 3P	576.4
5000AF 4P	746.4
6300AF 3P	732.4
6300AF 4P	962.4

Safety Control Cover [SC]

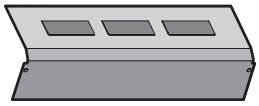

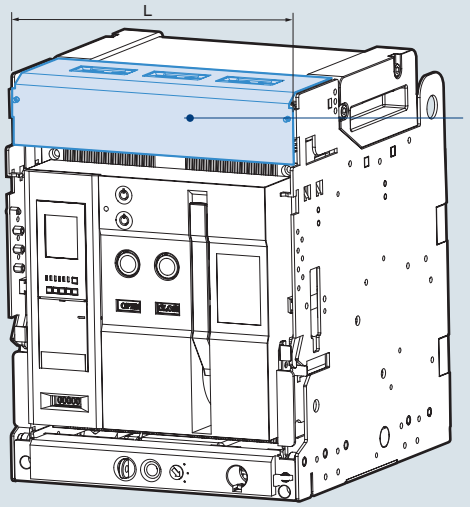

- It protects control terminals which exposes to the outside, and prevents the damages resulted from foreign substances.
- It is categorized into 8 types by ratings and poles.

Ampere frame	Cover length (mm)
2000AF 3P	334
2000AF 4P	419
4000AF 3P	412
4000AF 4P	527
5000AF 3P	629
5000AF 4P	799
6300AF 3P	785
6300AF 4P	1015

- It is available only when the control block is in the mode of auto-connection.

Body Supporter [BSP]



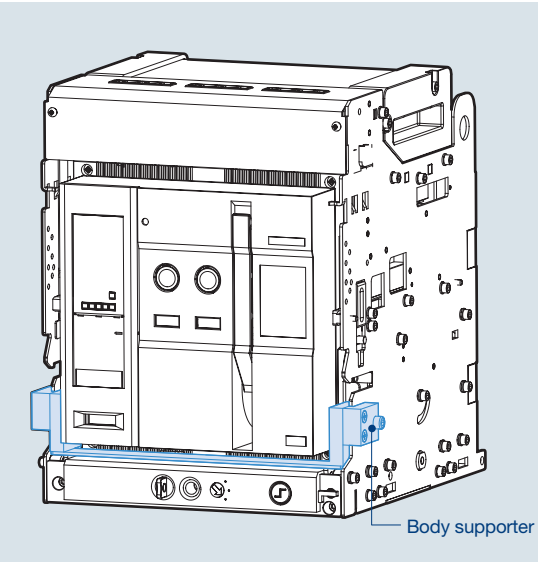

- It interlocks the main body of circuit breaker and cradle mechanically to fix the former in connected position. Therefore, all draw-in/outs are not available.

Racking Interlock [RI]

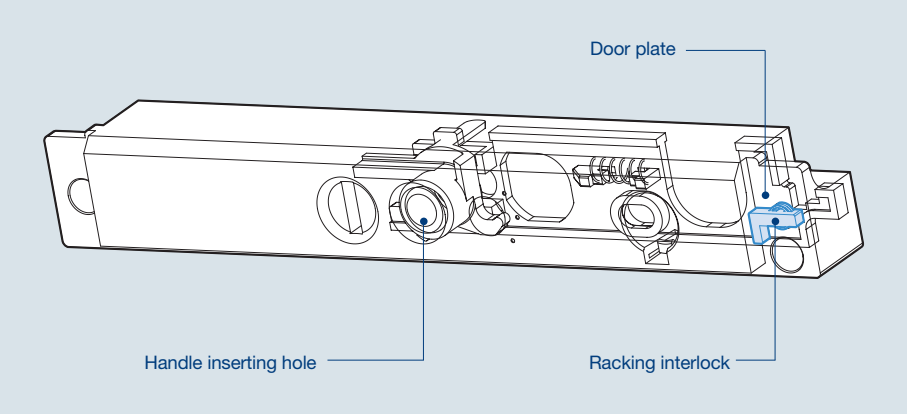

- When panel door is opened, Draw in / out handle doesn't be inserted. Thus, panel handle can be inserted only when panel door is closed.

Pad Lock / Position Lock [PL]



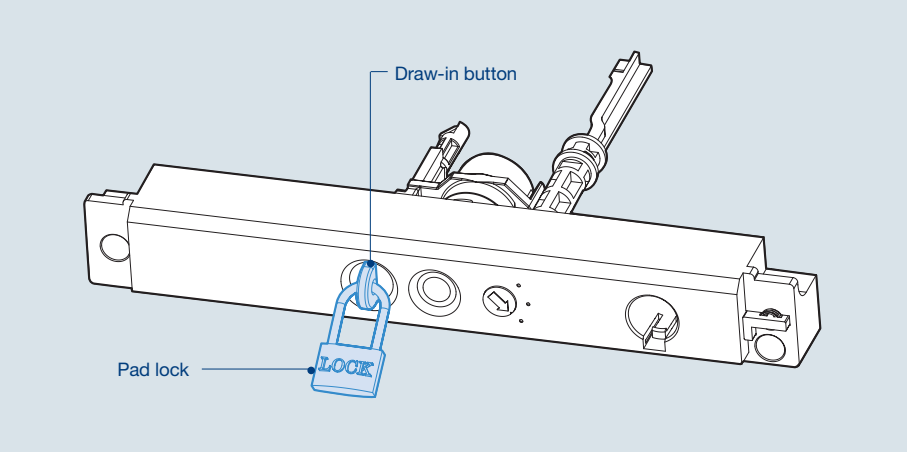

ACB is subject to restriction regarding moving in connected, test, disconnected when drawing in or out. If main body of ACB is placed in 3 positions, it is locked and stopped when drawing in or out.

- As shown in the figure, if draw-in / out button pops out, it means locking is operating.
- To continue Draw-in / out operation, release lock by pushing Draw-in / out button
- In case it is locked as shown in the figure above, main body of ACB can not be drawn in or out into the cradle.
- For the lock device, user has to purchase it. (Ø5 ~ Ø6)

Miss Insertion Prevent Device [MIP]



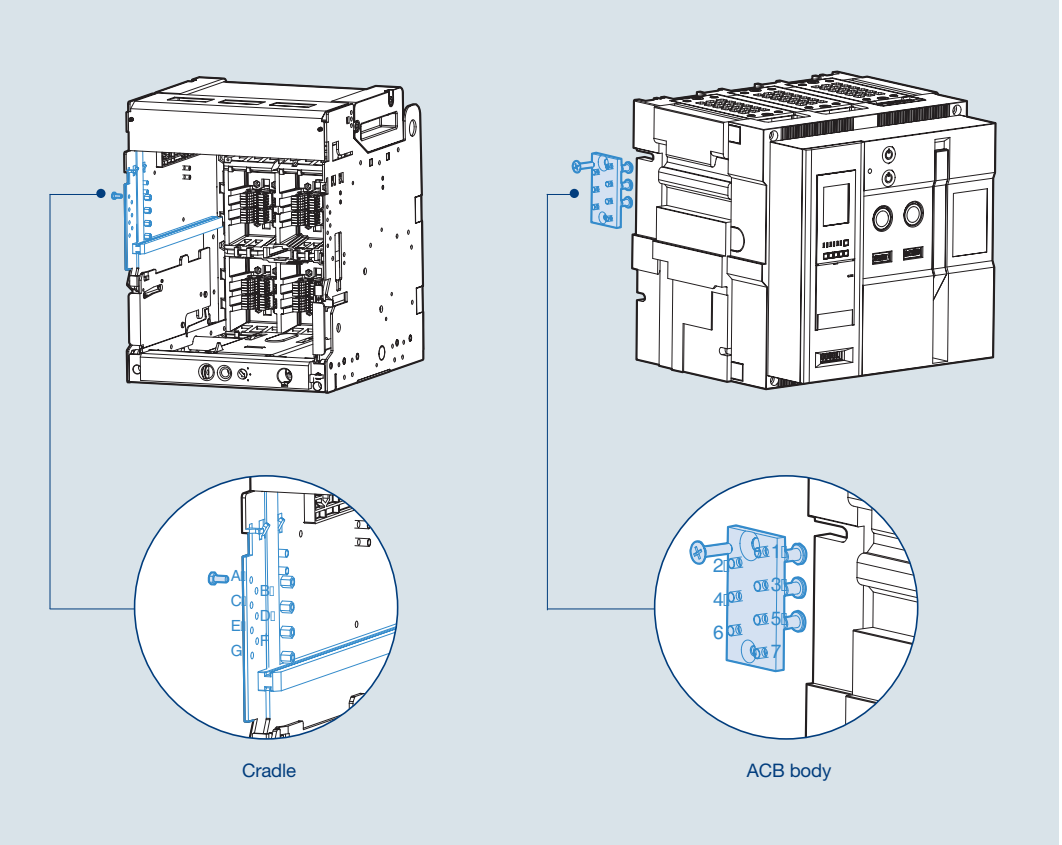

- When the main body of ACB is inserted to the cradle, if the ratings of ACB does not match with cradle, it mechanically prevents ACB from being inserted into cradle of ACB.
- The installation method is variable according to ratings.

Cradle	ACB
ABCD	567
ABCE	467
ABCF	457
ABCG	456
ABDE	367
ABDF	357
ABDG	356
ABEF	347

Cradle	ACB
ADEF	237
ADEG	236
ADFG	235
AEFG	234
BCDE	167
BCDF	157
BCDG	156
BCEF	147

Cradle	ACB
ABEG	346
ABFG	345
ACDE	267
ACDF	257
ACDG	256
ACEF	247
ACEG	246
ACFG	245

Cradle	ACB
BCEG	146
BDEF	137
BDEG	136
BDFG	135
CDEF	127
CDEG	126
CEFG	124
DEFG	123

UVT Time Delay Controller [UDC]



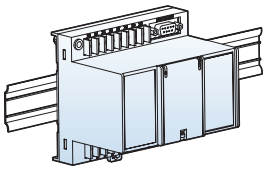

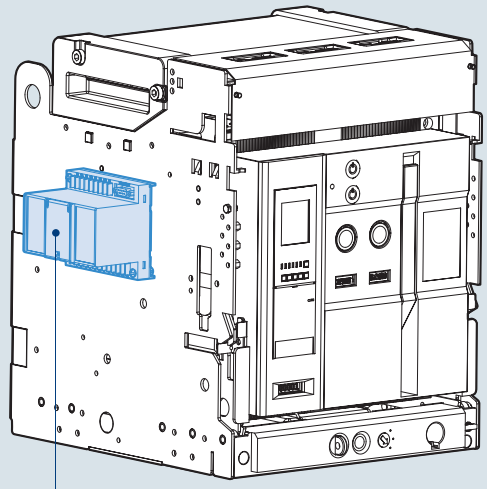

- UVT is a device which makes ACB tripped automatically to prevent the accident on load side due to under voltage or power breakdown. There are two types, Instantaneous type and time delay type.
- It can be installed on the rail or to the cradle.
- Instantaneous type: only available with UVT coil.
- Time delay type: available by connecting UVT coil and UVT time delay controller.
- Common use for the all types.

1. The rated voltage and characteristic of UVT time delay controller

Rated voltage (Vn)		Operating voltage range (V)		Power consumption (VA or W)		Trip time (s)
DC (V)	AC (V)	Pick up	Drop out	Inrush	Steady-state	
48~60	48	0.65~0.85 Vn	0.4~0.6 5Vn	200	5	0.5, 1, 1.5, 3
100~130	100~130					
200~250	200~250					
-	380~480					

Note) Operating voltage range is the min. rated standard for each rated voltage (Vn).

2. Wiring

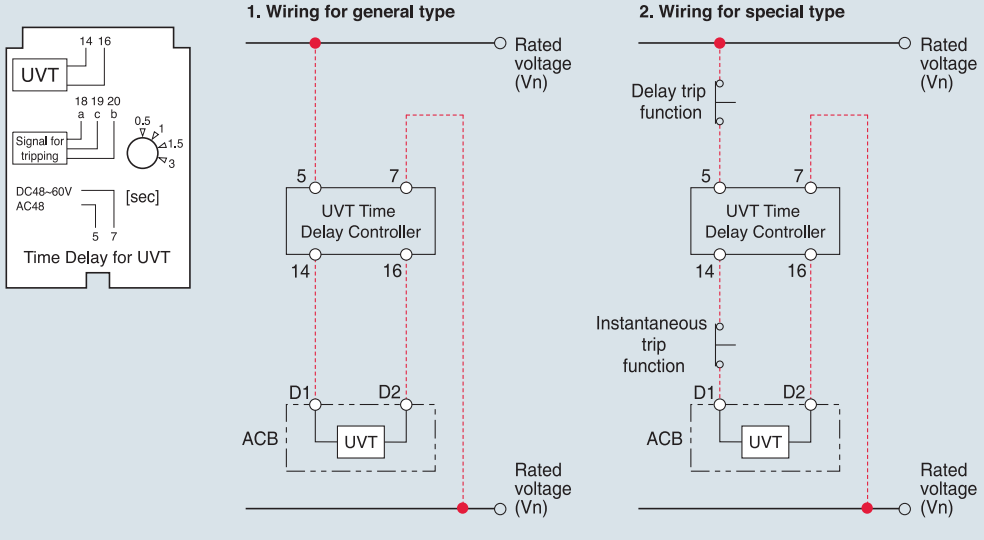

* The wiring presented with red color should be set by uesers.

Temperature Remote I/O Unit [TRIO Unit]

Temperature monitoring function

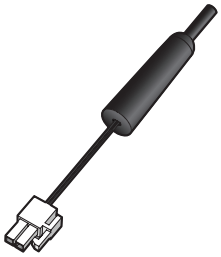

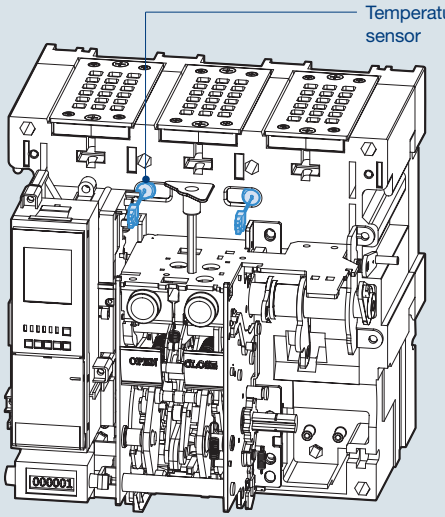

- TRIO unit is a device to show the temperature through a sensor inside of ACB.
- The temperature sensor can be installed up to 2 and the output is connected to control terminal blocks.
- It displays the maximum temperature of them and transmits through a network.
- If the temperature is higher than a standard, an alarm can occur.
- TRIO unit communicates with Modbus / RS-485 basically, Profibus-DP need to be purchased separately.
- TRIO unit is installed on the cradle or the inside of panel.



TRIO UNIT

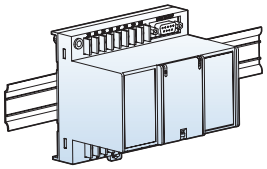

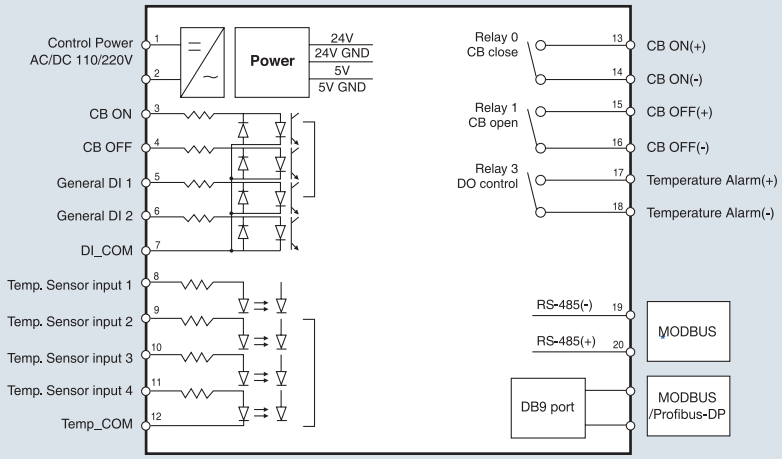

* DB9 Port is connected only when a repeater is used.

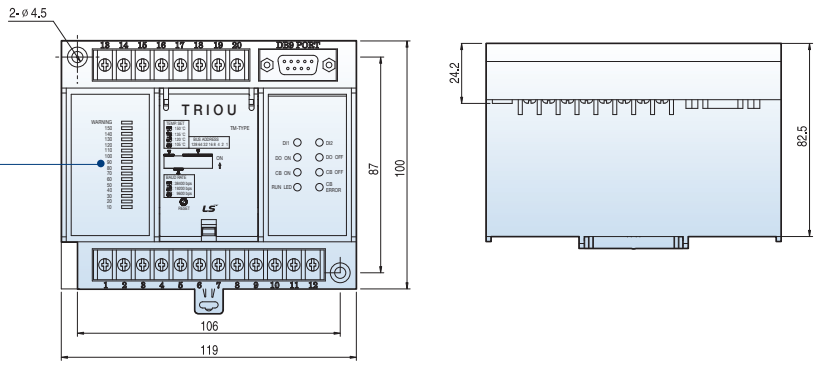

Temperature LED(℃): 10 ~150℃, Warning
(Indicates the maximum value)

Remote control function (CB ON/OFF)

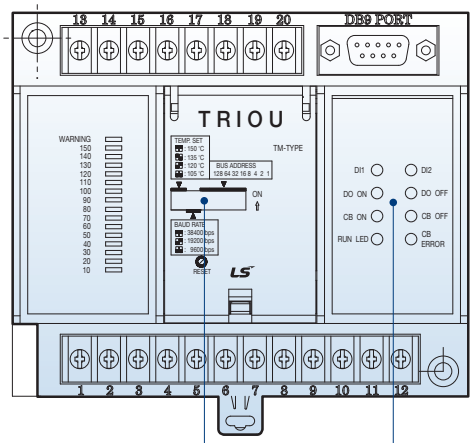

- Baud rate setting
- Comm. address setting
- Temperature setting

- TRIO unit has the I/O contact which can trip or close the ACB from the remote site by communication.
- It supports SBO (Select Before Operation) function

	LED	Status
1	DI1	Indicates digital Input #1condition
2	DI2	Indicates digital Input #2condition
3	DO ON	Indicates temperature alarm output is ON
4	DO OFF	Indicates temperature alarm output is OFF
5	CB ON	Indicates circuit break close condition
6	CB OFF	Indicates circuit break open condition
7	RUN LED	Indicates unit run condition
8	CB ERROR	Indicates circuit break terminal Disconnection / control Err condition

Classification		Applied range	Remarks
CB control	Contact switching capacity	AC230V 16A/DC30V 16A	
	Max. switching capacity	3680VA, 480W	
Alarm	Contact switching capacity	AC230V 6A/DC25V 6A	Induction load (cosØ=0.4, L/R=7ms)
	Max. switching capacity	1880VA, 150W	

Electrical diagram

Susol · Metasol

This diagram is based on “CONNECTED” position of a circuit breaker and Opening, Motor charging, Releasing of locking plate should be normal condition.

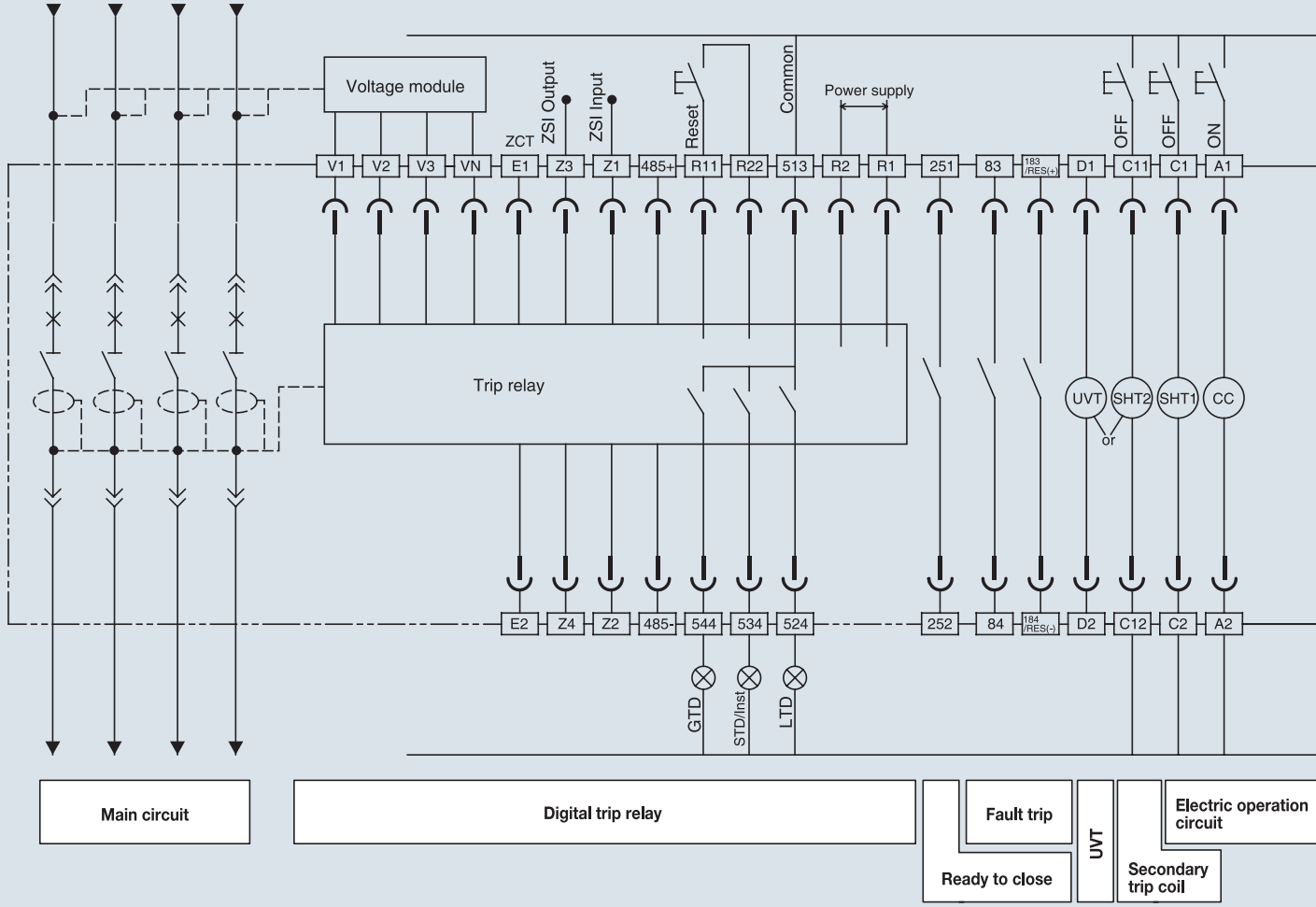

Terminal code description

13 14 ~ 63 64	Auxiliary switch “a”
11 12 ~ 61 62	Auxiliary switch “b”
413 414	Charged signal
423 424	Charged signal communication
U1 U2	Motor charging
A1 A2	Closing coil
C1 C2	Shunt trip
C11 C12	2nd shunt trip

D1 D2	Voltage input terminal of UVT
83 84	Alarm1 “a”
183 184	Alarm2 “a”
251 252	Ready to close switch
R1 R2	Control power
513 ~ 544	Alarm contact
R11 R22	Alarm reset (Trip cause LED, Alarm contact)
485+ 485-	RS-485 communication

Note) 1. The diagram is shown with circuits de-energized, all devices open, connected and charged and relays in normal position
2. Relay is normal condition and charging type is "OFF-Charging"
3. The standard of auxiliary contact is 3a3b. The auxiliary switch in above diagram is composed of 5a5b. See 66 page for more detail on auxiliary switches.
4. Option
- Ready to close contact, Trip alarm contact, UVT coil, Fully charged contact, secondary trip coil
- Cell switch, Temperature module, Voltage module, Remote close-open module, ZCT, ZSI
5. Please consult us for the use of ZSI (Zone selective Interlocking).
6. Refer to the page 47 for the connection of Trip relay and the page 61 for UVT.
7. For connecting RS-485 verify if the polarity is correct

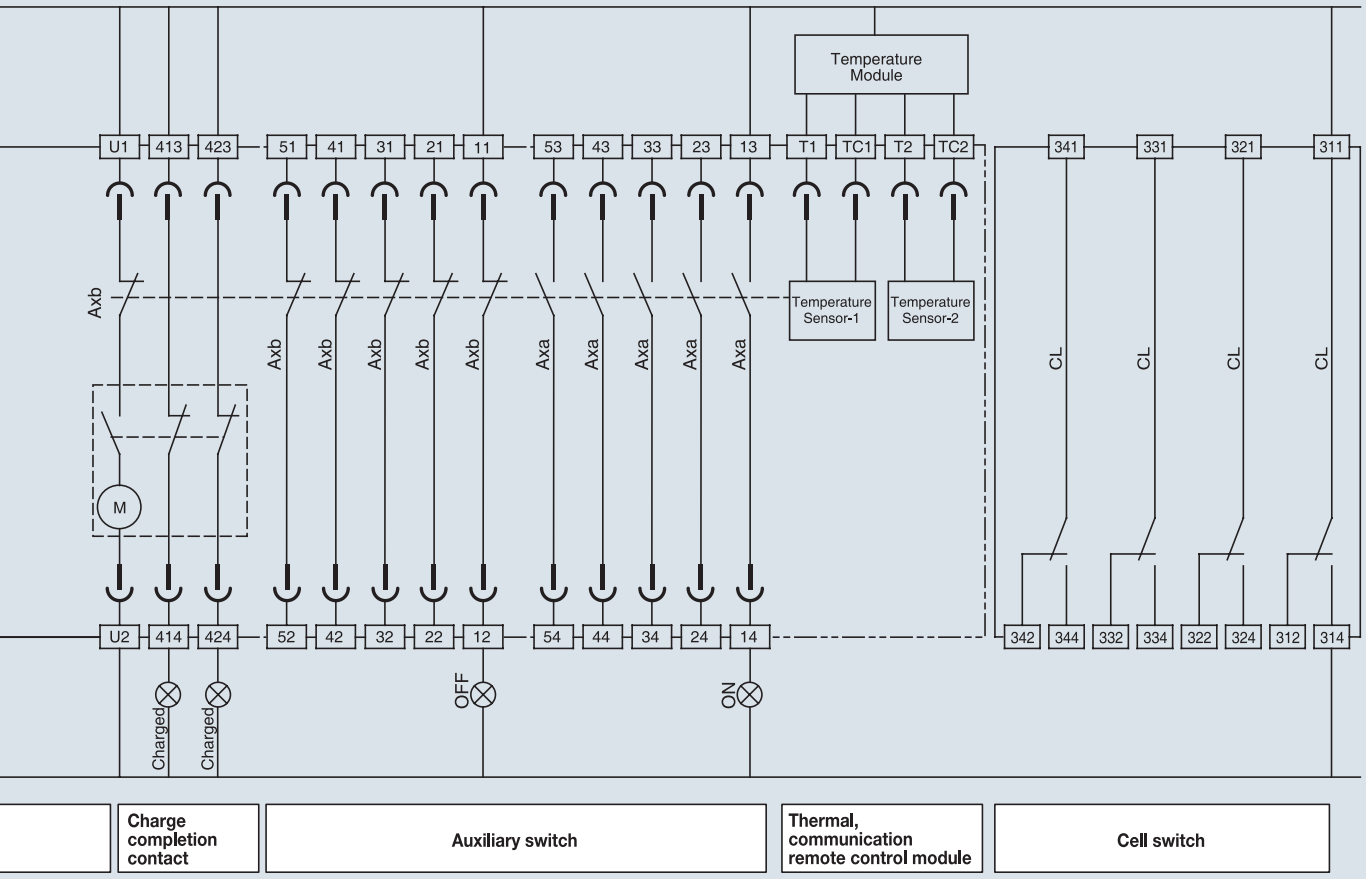

Z1 Z2	ZSI input
Z3 Z4	ZSI output
E1 E2	ZCT
VN ~ V3	Voltage module
TC1 , TC2 ~ T1 , T2	Temperature module
311 ~ 344	Position switch

Accessory code description

Ax	Auxiliary switch
LTD	Long time delay trip indicator
STD/Inst	Short time delay/instantaneous
GTD	Ground fault trip indicator
CL	Cell switch
M	Motor
CC	Closing coil
SHT1	Shunt tripping device 1
SHT2	Shunt tripping device 2
UVT	UVT coil

	Internal wiring
	External wiring (by customer)
	Connector of the control circuit terminal of drawout type

Fixed type 2000AF
(630~1600A: AH/AN/AS-06~16D)

Dimensions: [mm]

Front view

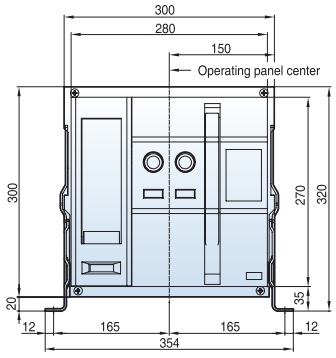

3P

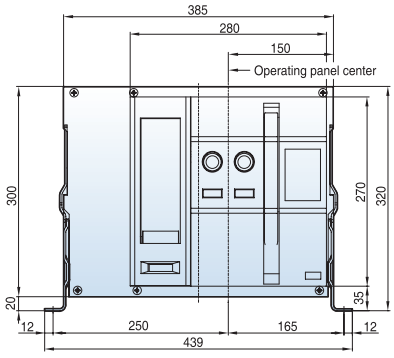

4P

Vertical type

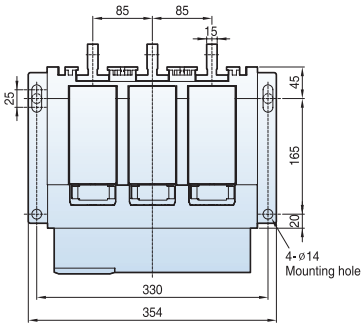

3P

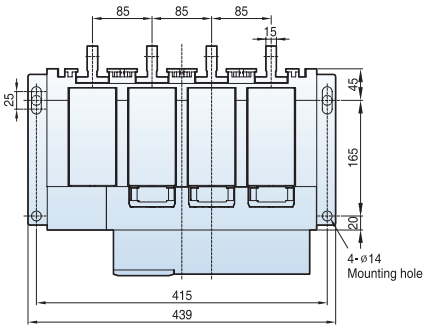

4P

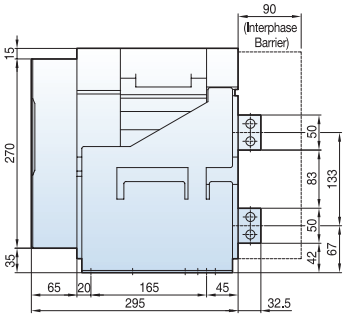

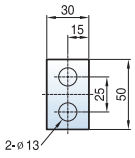

<Conductor>

Door Frame: DF (AH/AN/AS-D/E)

<Mounting hole>

<Side hole>

<Panel cutting >

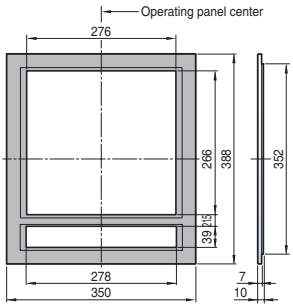

<External size>

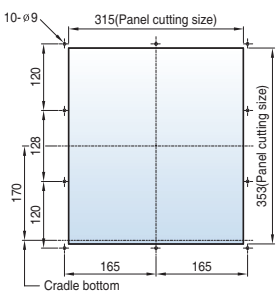

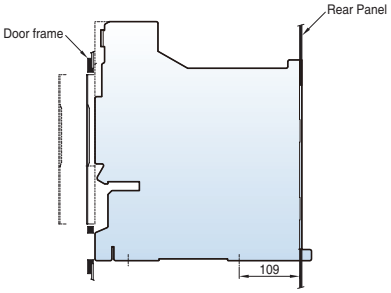

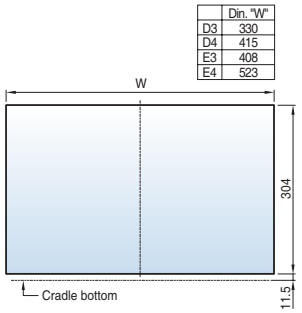

Note) The dimensions are for drawout type.

Dimensions: [mm]

Horizontal type

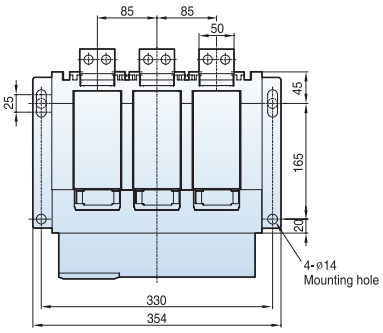

3P

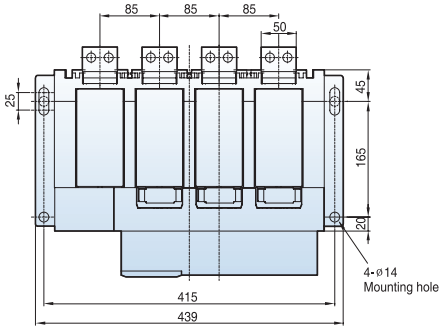

4P

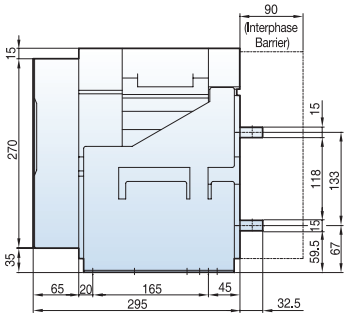

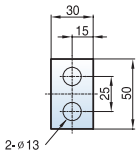

<Conductor>

Front connection type

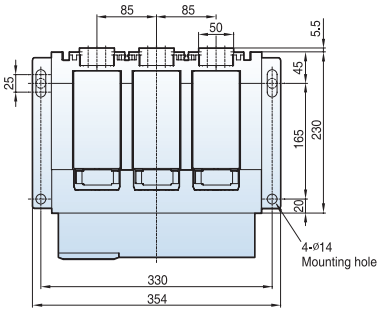

3P

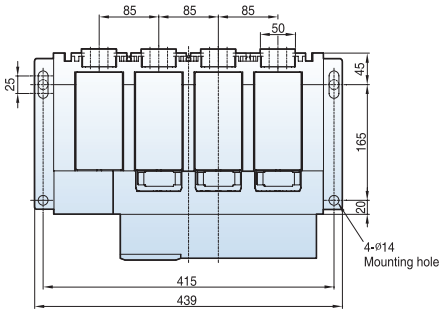

4P

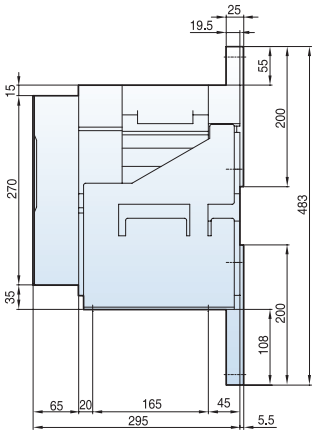

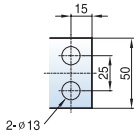

<Conductor>

Draw-out type 2000AF (630~1600A: AH/AN/AS-06~16D)

Dimensions: [mm]

Front view

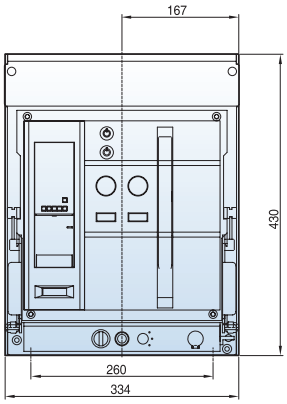

3P

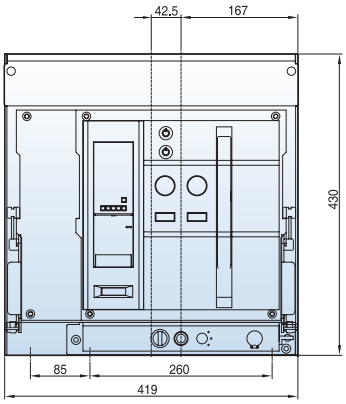

4P

Vertical type

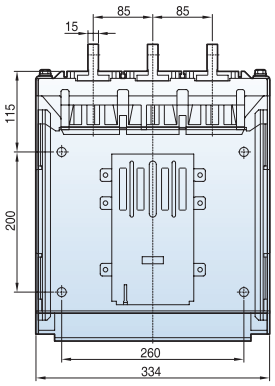

3P

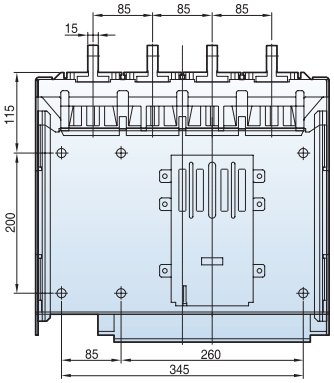

4P

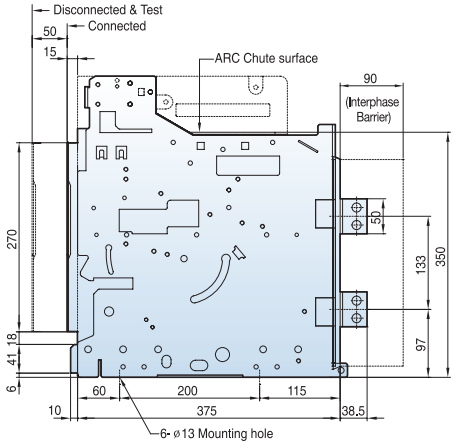

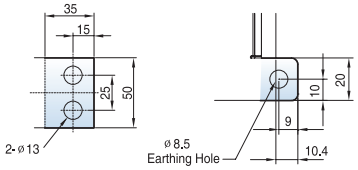

<Conductor>

Dimensions: [mm]

Horizontal type

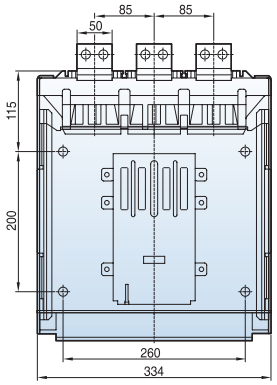

3P

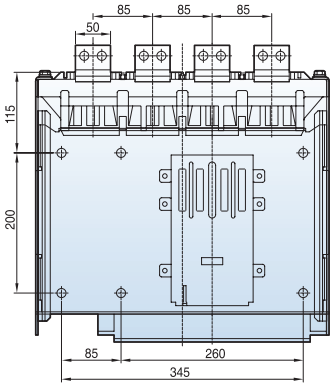

4P

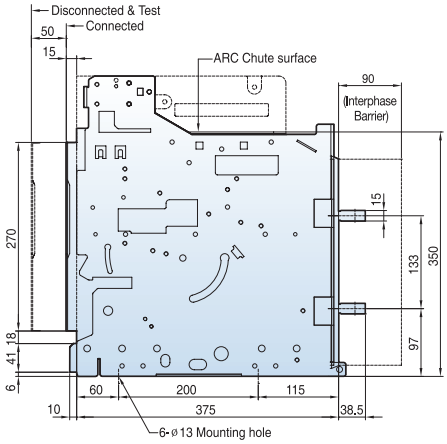

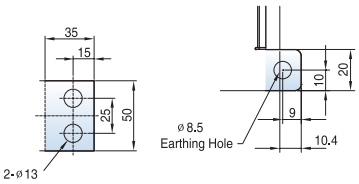

<Conductor>

Front connection type

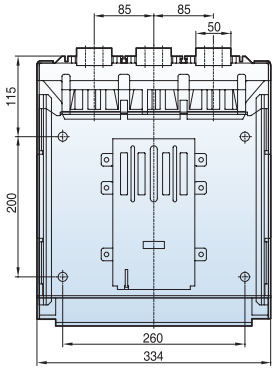

3P

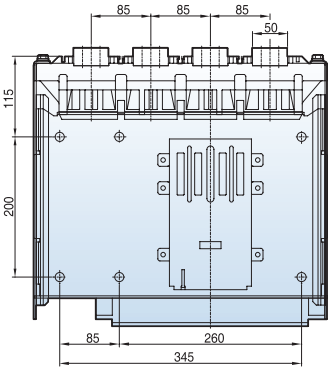

4P

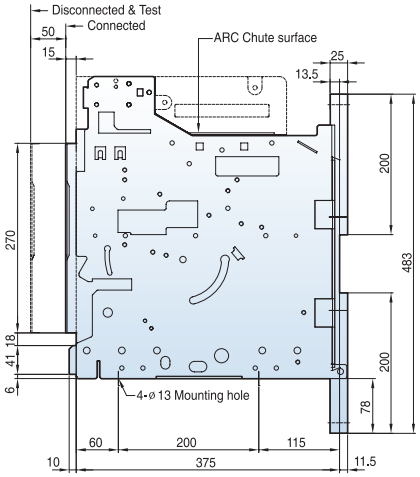

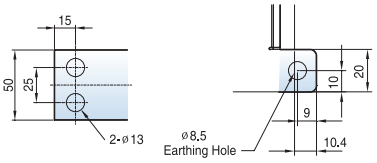

<Conductor>

Fixed type 2000AF (2000A: AH/AS-20D)

Dimensions: [mm]

Front view

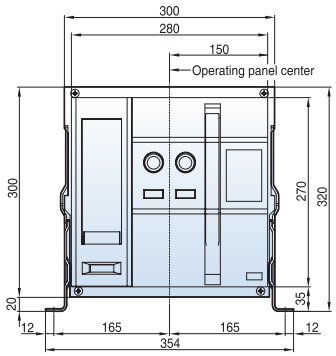

3P

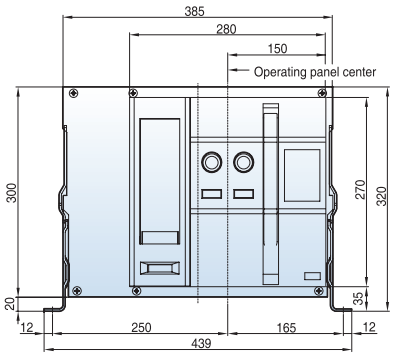

4P

Vertical type

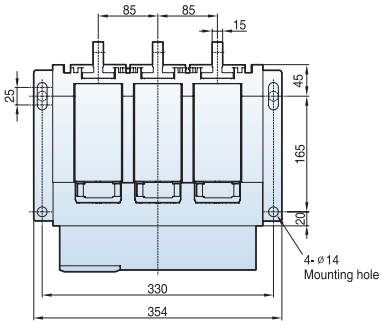

3P

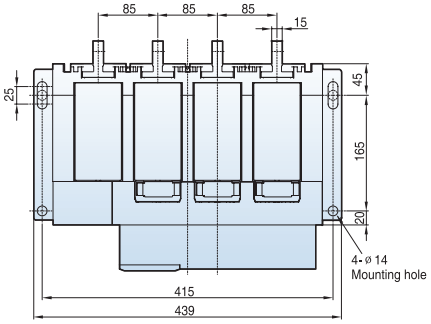

4P

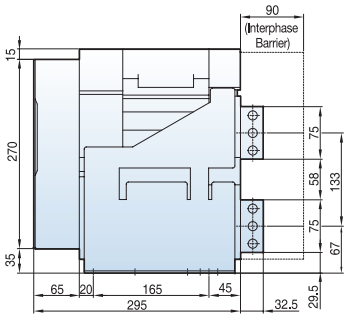

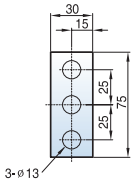

<Conductor>

Draw-out type 2000AF (2000A: AH/AS-20D)

Dimensions: [mm]

Front view

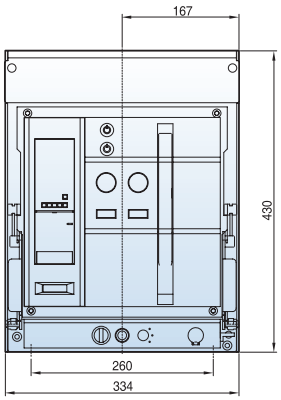

3P

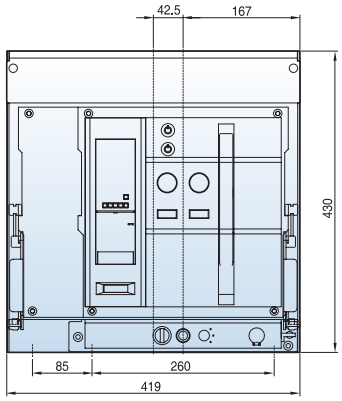

4P

Vertical type

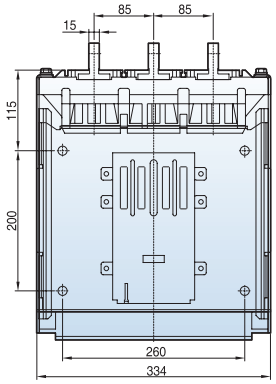

3P

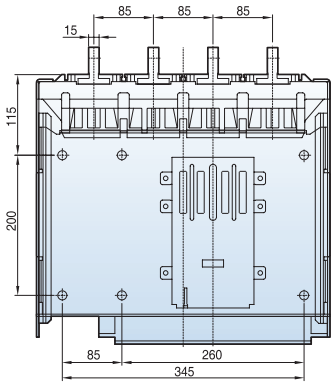

4P

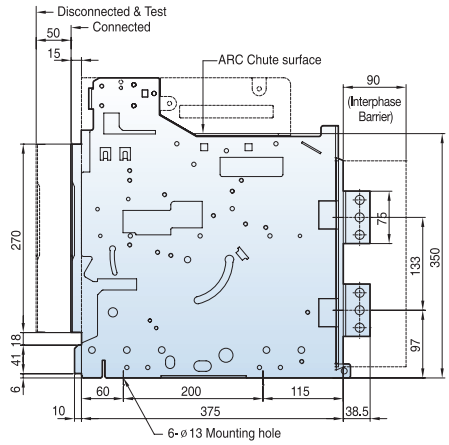

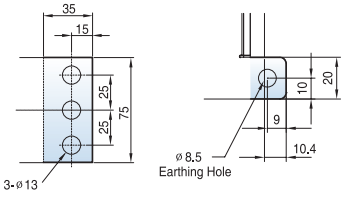

<Conductor>

Fixed type 4000AF
(2000~3200A: AH/AS-20~32E)

Dimensions: [mm]

Front view

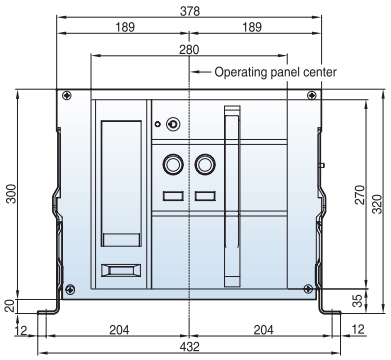

3P

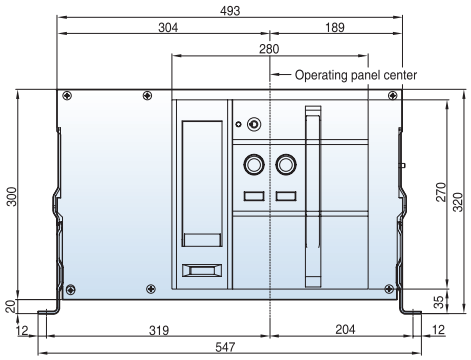

4P

Vertical type

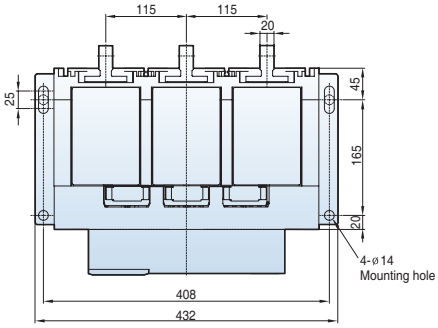

3P

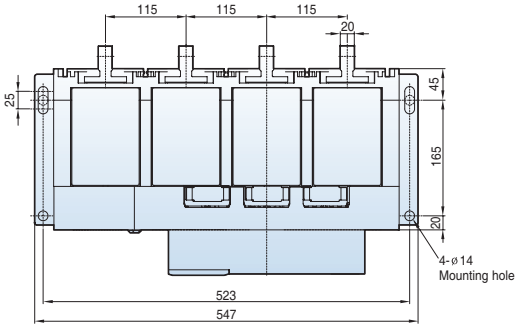

4P

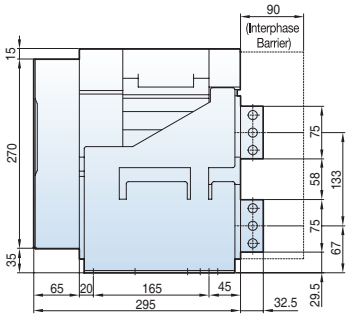

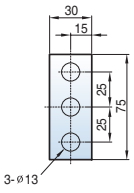

<Conductor>

Dimensions: [mm]

Horizontal type

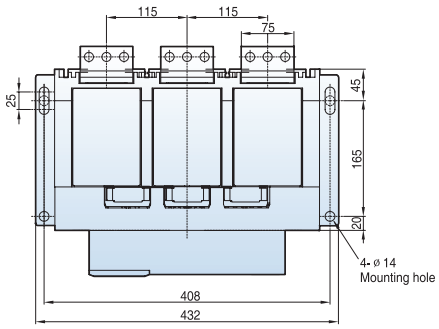

3P

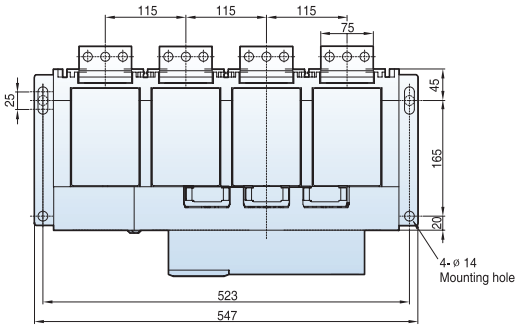

4P

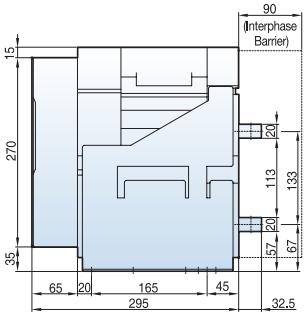

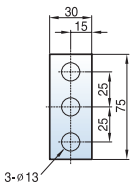

<Conductor>

Front connection type

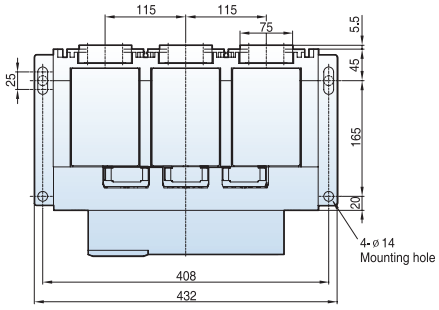

3P

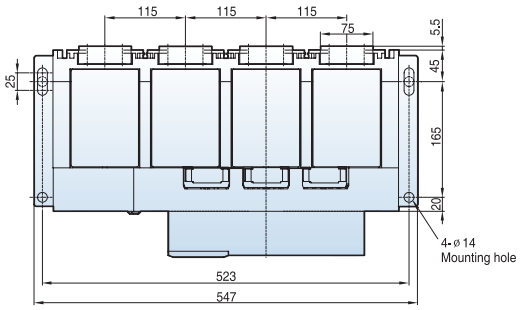

4P

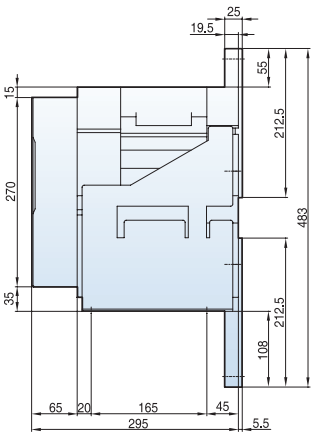

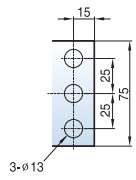

<Conductor>

Draw-out type 4000AF (2000~3200A: AH/AS-20~32E)

Dimensions: [mm]

Front view

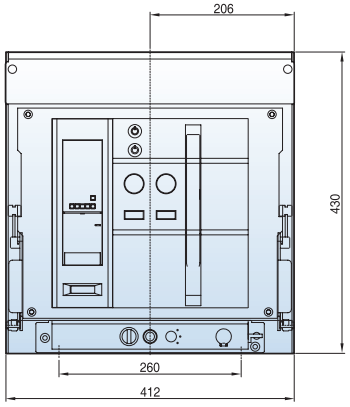

3P

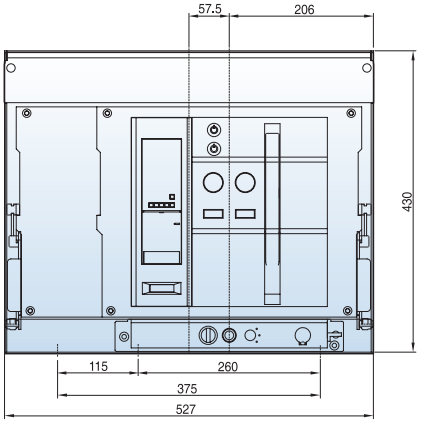

4P

Vertical type

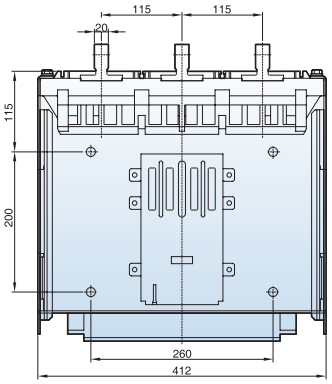

3P

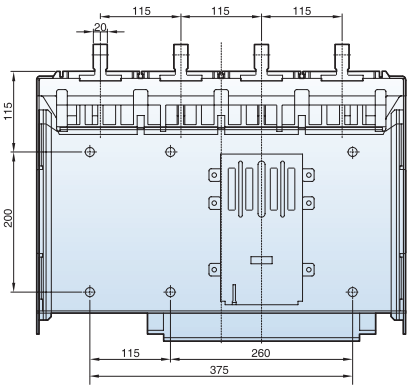

4P

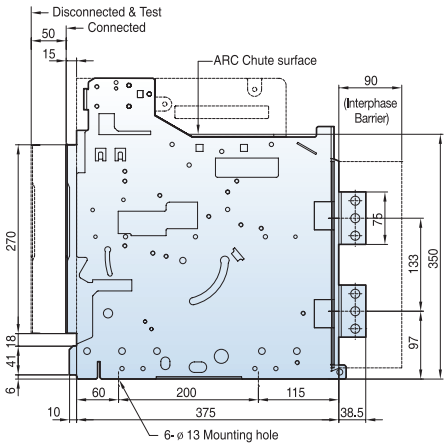

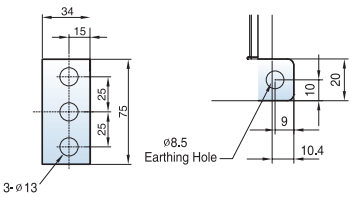

<Conductor>

Dimensions: [mm]

Horizontal type

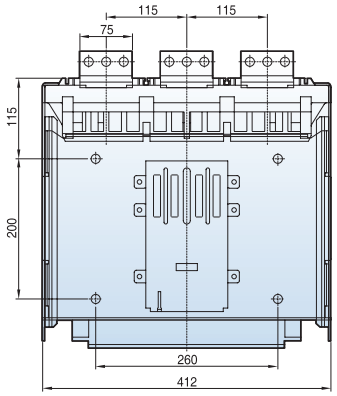

3P

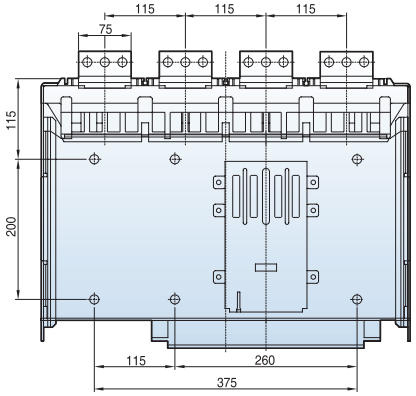

4P

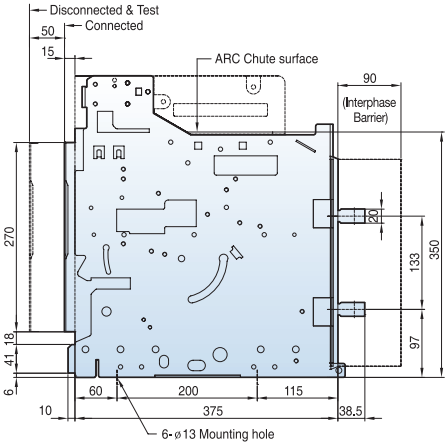

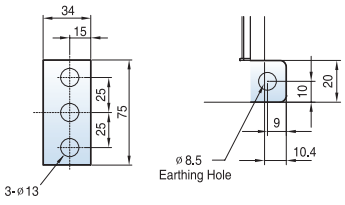

<Conductor>

Front connection type

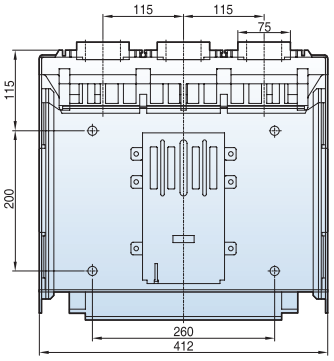

3P

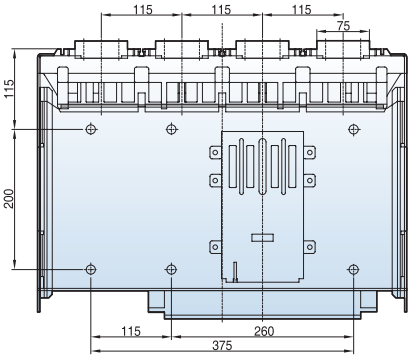

4P

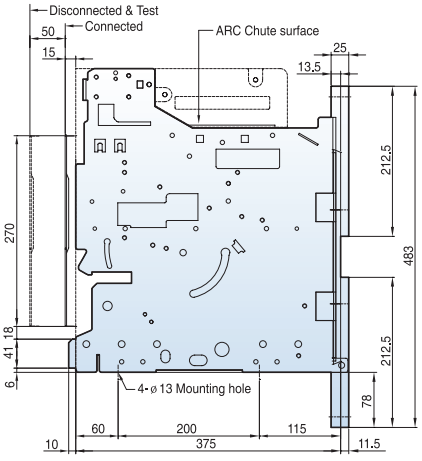

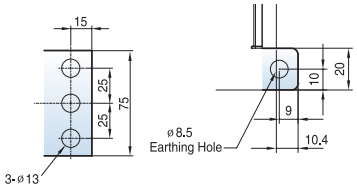

<Conductor>

Fixed type 4000AF (4000A: AH/AS-40E)

Dimensions: [mm]

Front view

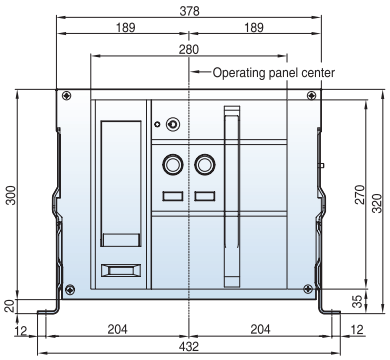

3P

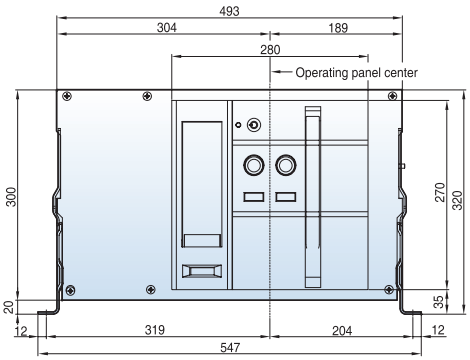

4P

Vertical type

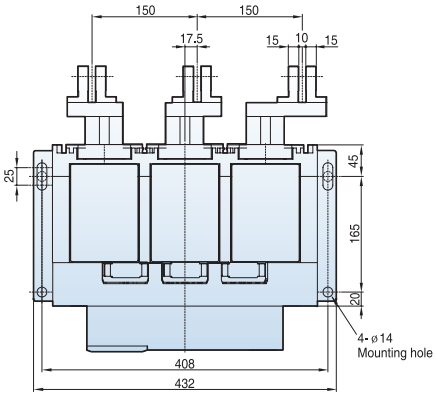

3P

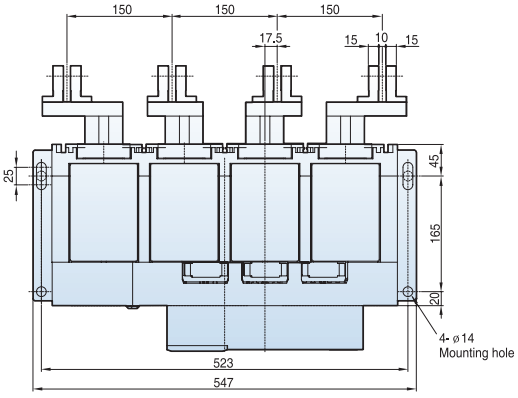

4P

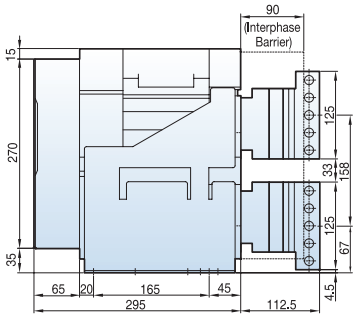

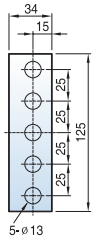

<Conductor>

Draw-out type 4000AF (4000A: AH/AS-40E)

Dimensions: [mm]

Front view

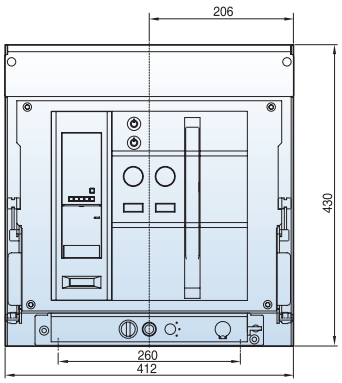

3P

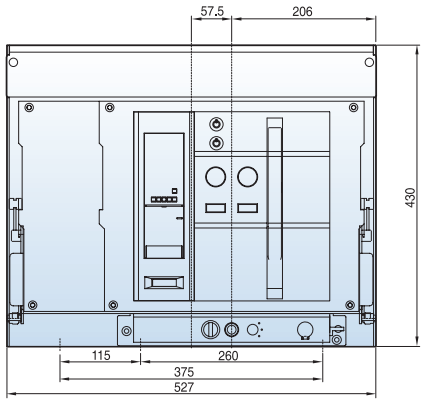

4P

Vertical type

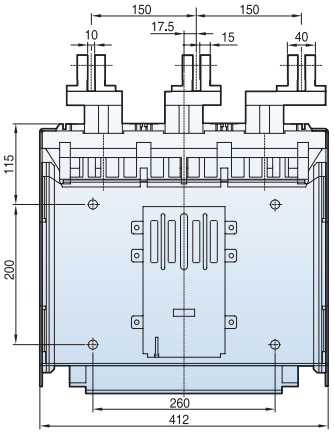

3P

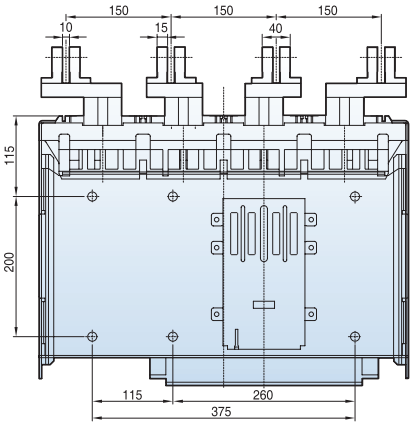

4P

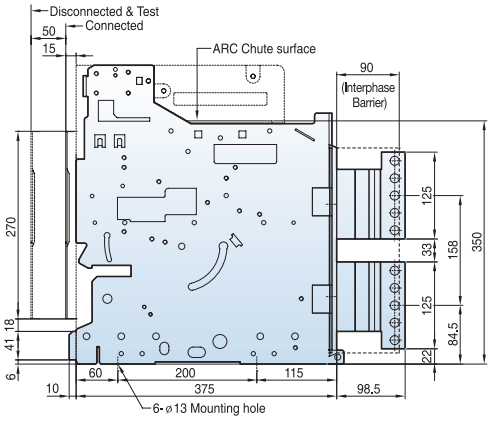

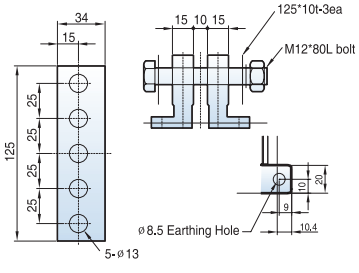

<Conductor>

Dimensions

Metasol

Fixed type 5000AF (4000~5000A: AS-40~50F)

Dimensions: [mm]

Front view

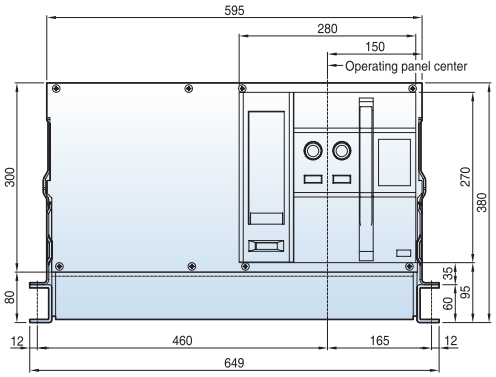

3P

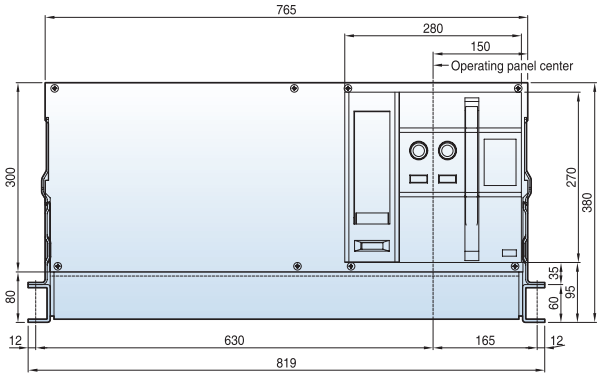

4P

Vertical type

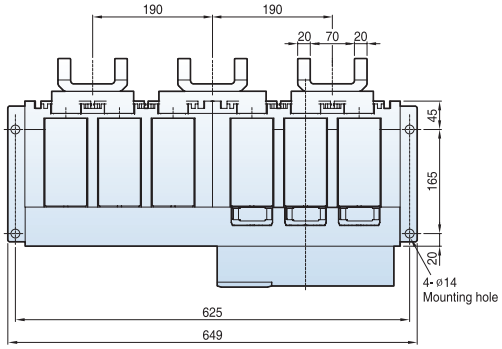

3P

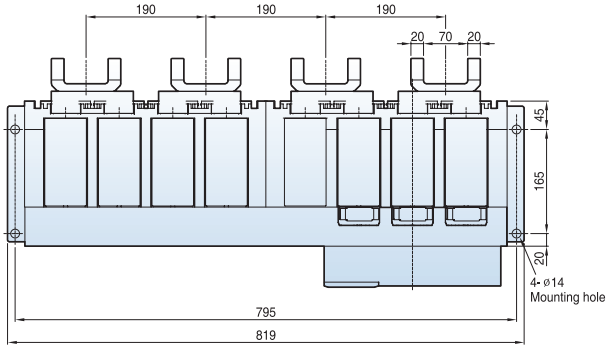

4P

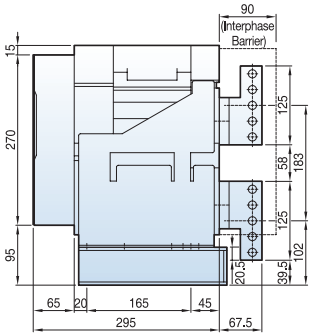

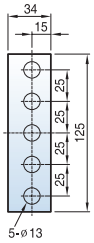

<Conductor>

Dimensions: [mm]

Horizontal type

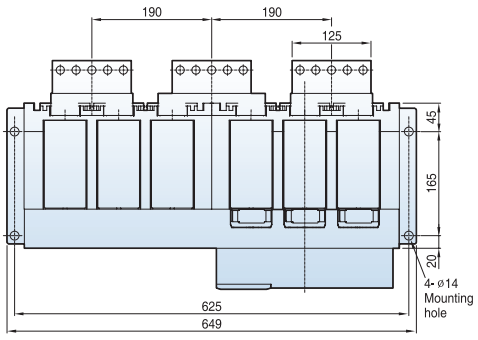

3P

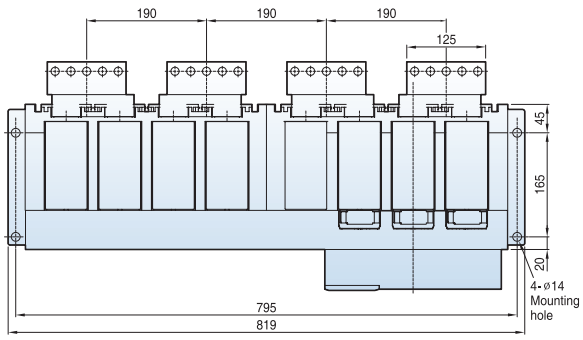

4P

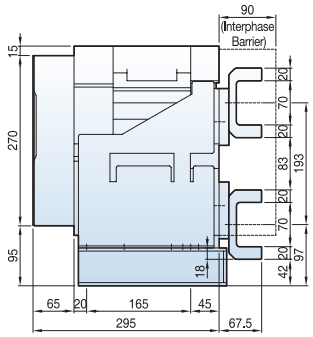

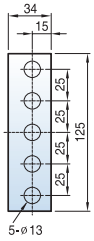

<Conductor>

Door Frame: DF (AH-G, AS-F)

<Mounting hole>

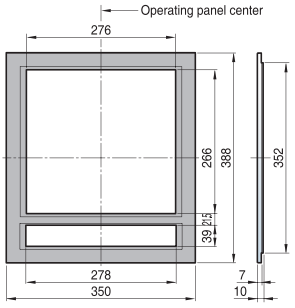

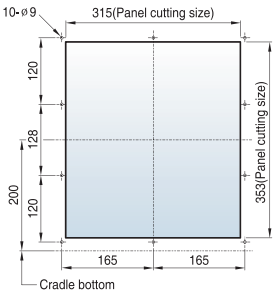

<Side hole>

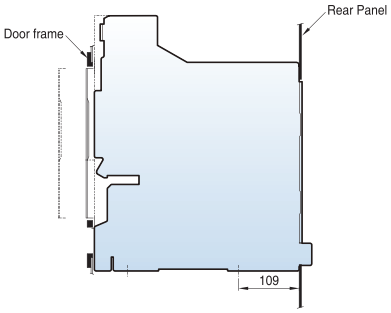

<Panel cutting >

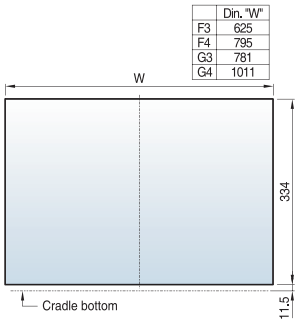

<External size>

Note) The dimensions are for drawout type.

Dimensions

Metasol

Draw-out type 5000AF (4000~5000A: AS-40~50F)

Dimensions: [mm]

Front view

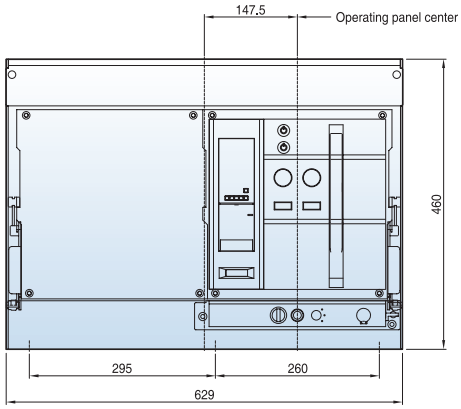

3P

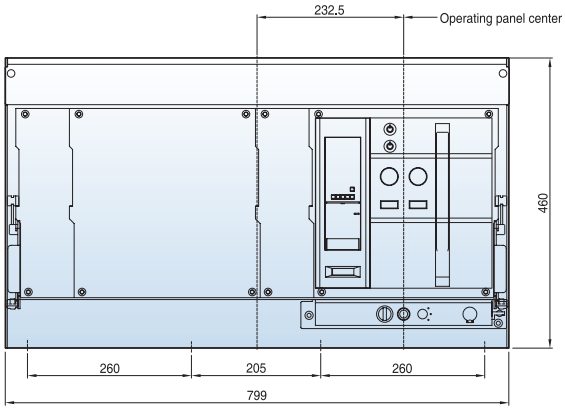

4P

Vertical type

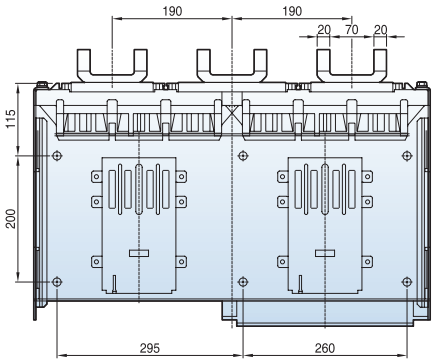

3P

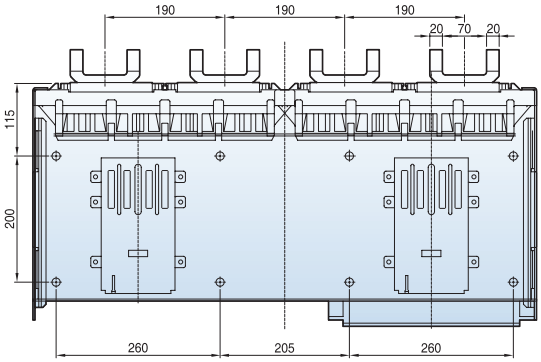

4P

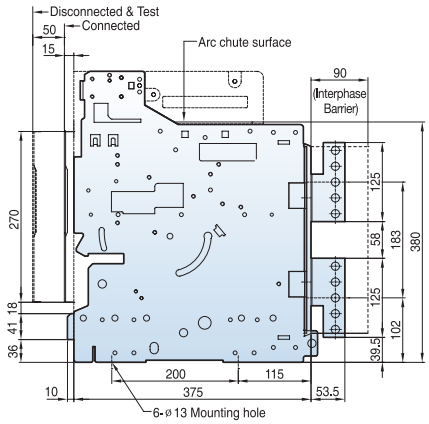

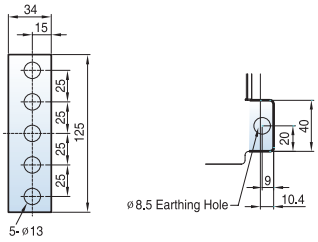

<Conductor>

Dimensions: [mm]

Horizontal type

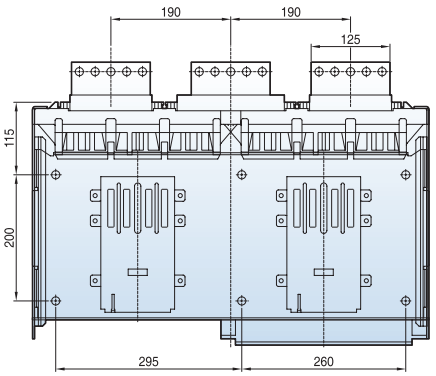

3P

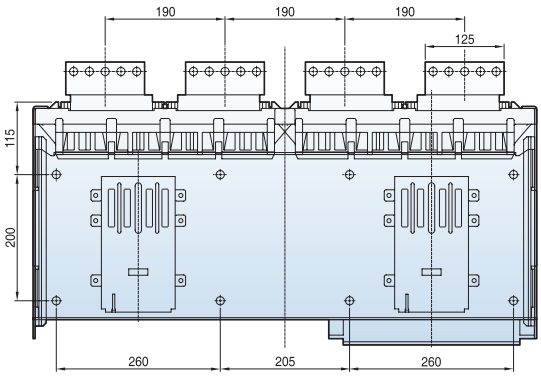

4P

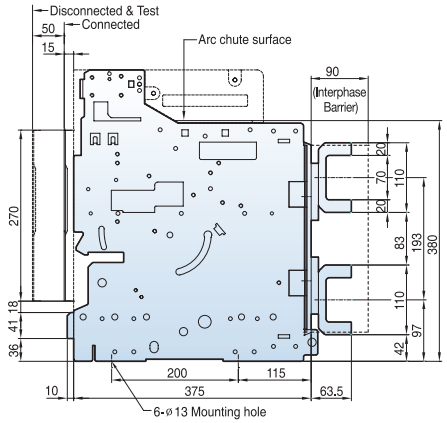

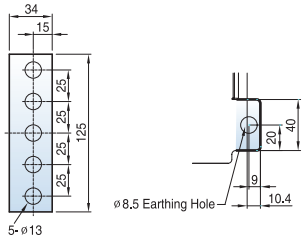

<Conductor>

Dimensions

Susol · Metasol

Fixed type 6300AF (4000A~6300A: AH/AS-40~63G)

Dimensions: [mm]

Front view

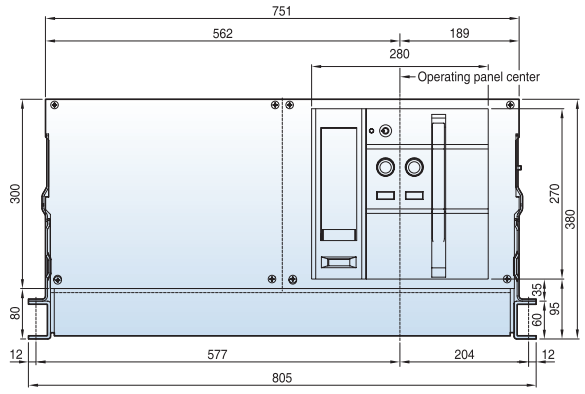

3P

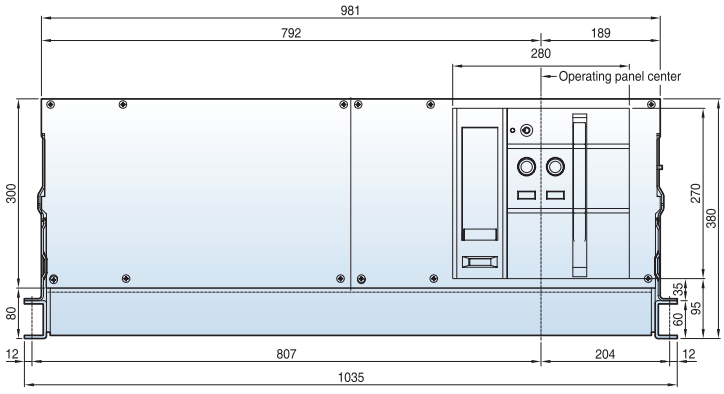

4P

Vertical type

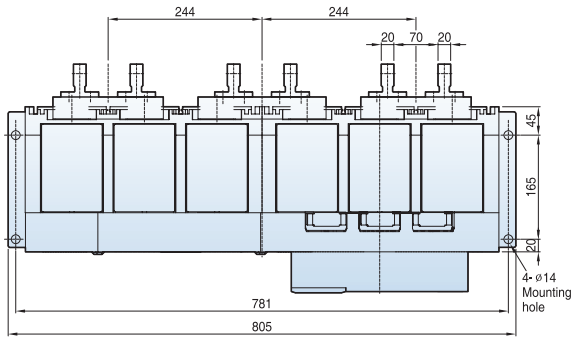

3P

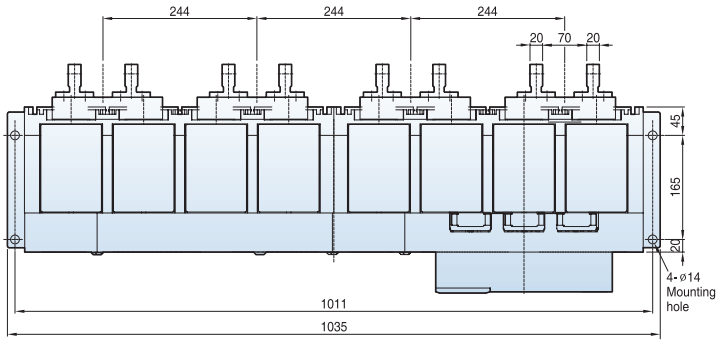

4P

4000A~5000A

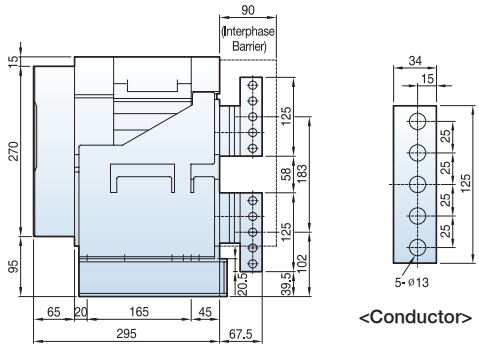

<Conductor>

6300A

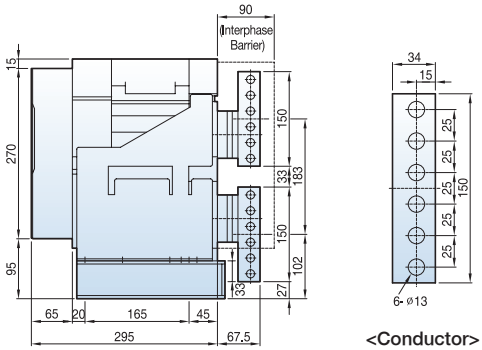

<Conductor>

Dimensions: [mm]

Horizontal type

4000A~5000A

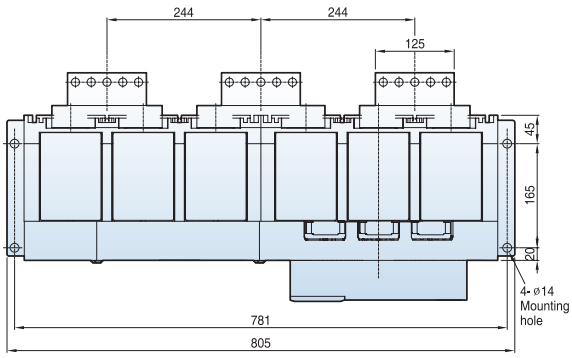

3P

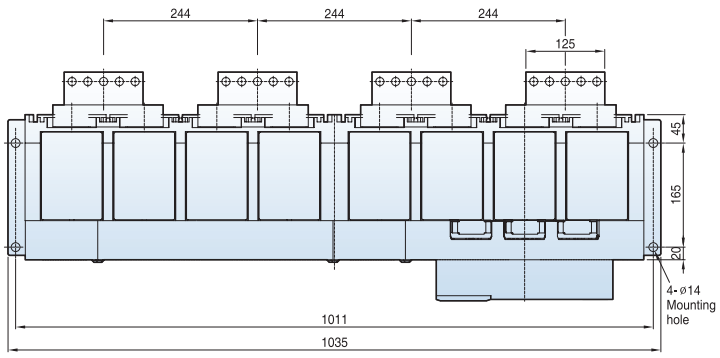

4P

6300A

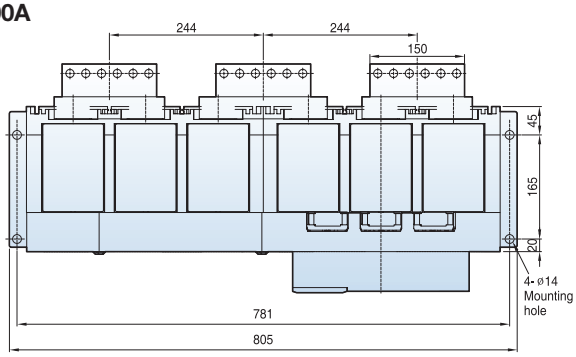

3P

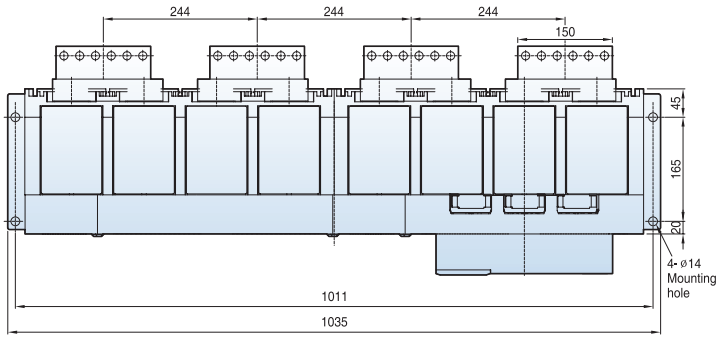

4P

4000A~5000A

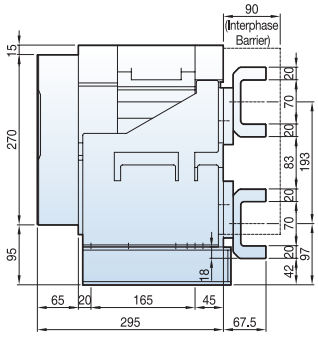

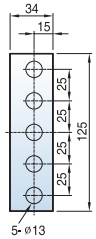

<Conductor>

6300A

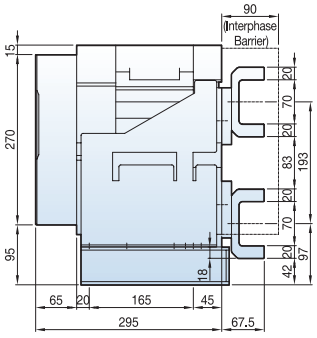

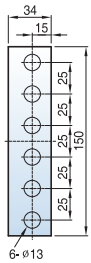

<Conductor>

Draw-out type 6300AF (4000A~6300A: AH/AS-40~63G)

Dimensions: [mm]

Front view

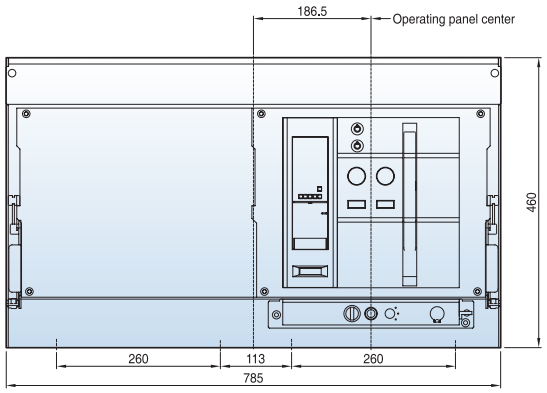

3P

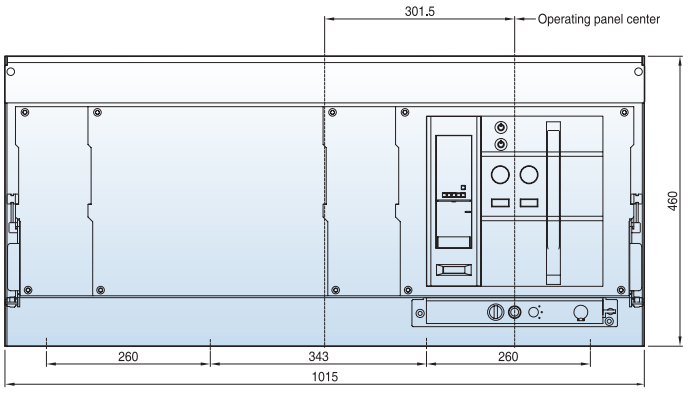

4P

Vertical type

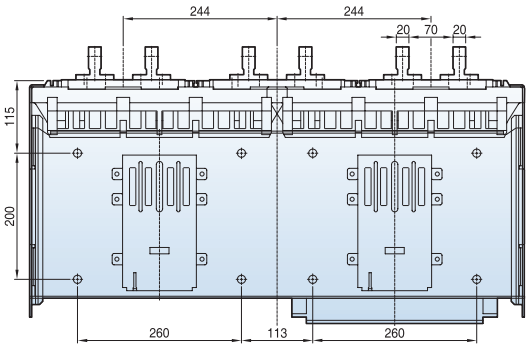

3P

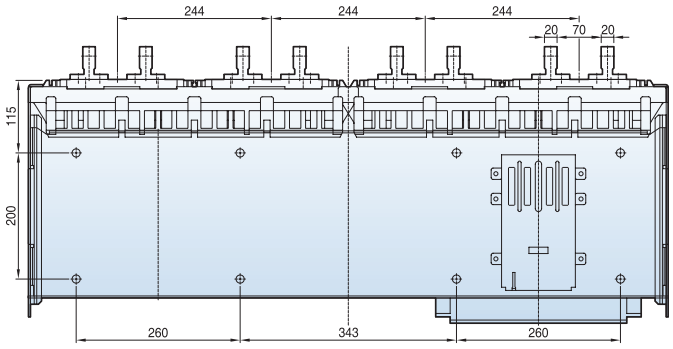

4P

4000A~5000A

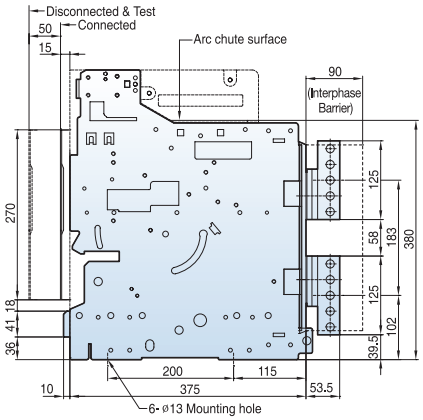

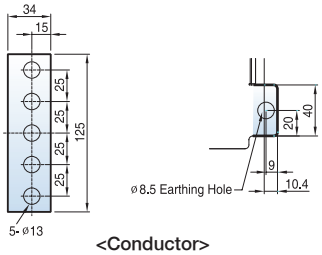

<Conductor>

6300A

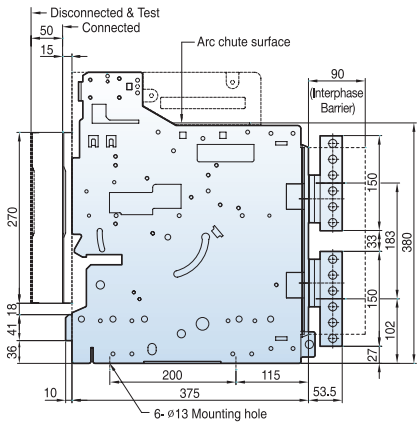

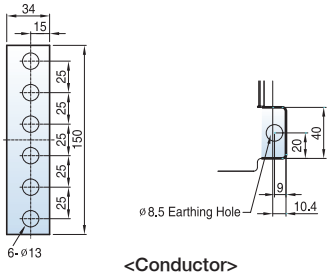

<Conductor>

Dimensions: [mm]

Horizontal type

4000A~5000A

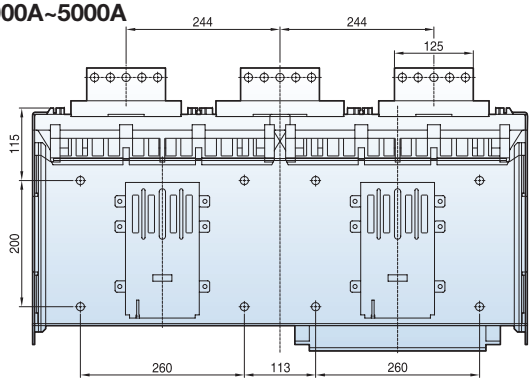

3P

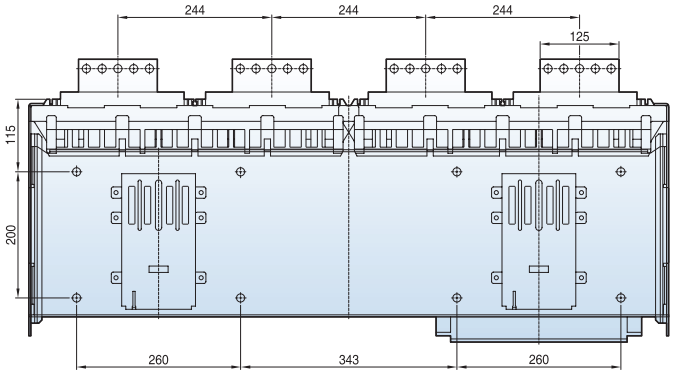

4P

6300A

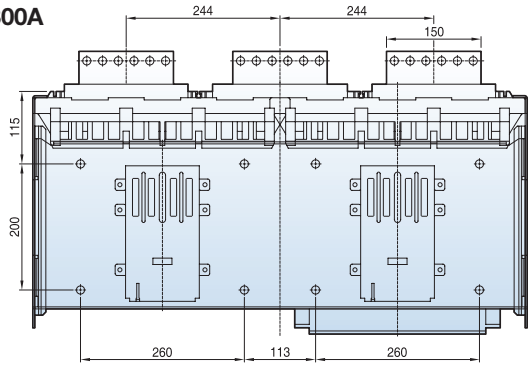

3P

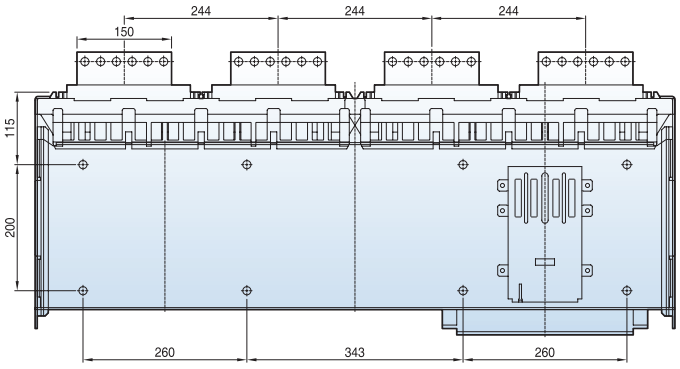

4P

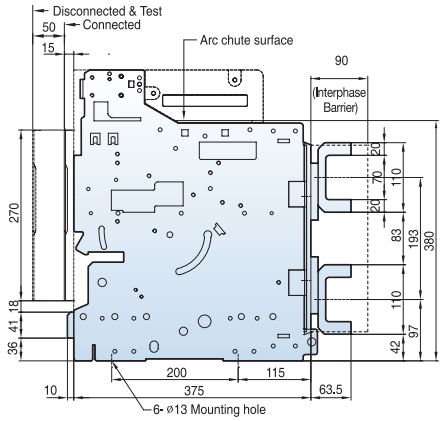

4000A~5000A

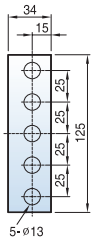

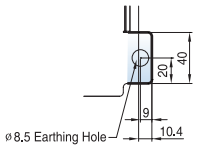

<Conductor>

6300A

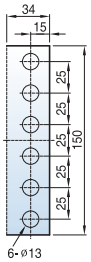

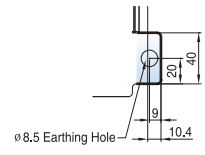

<Conductor>

Insulation voltage

You should keep the isolation distance between ACB and panel as below table.

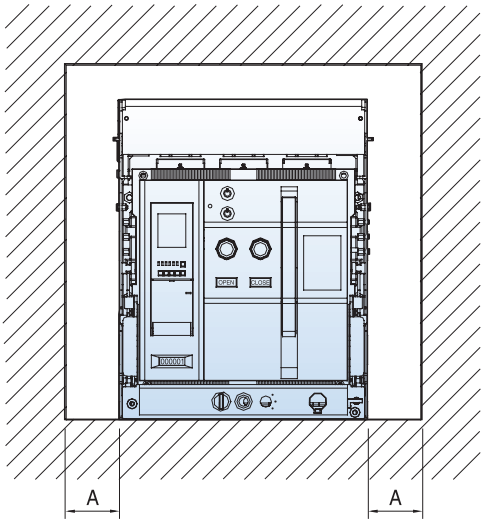

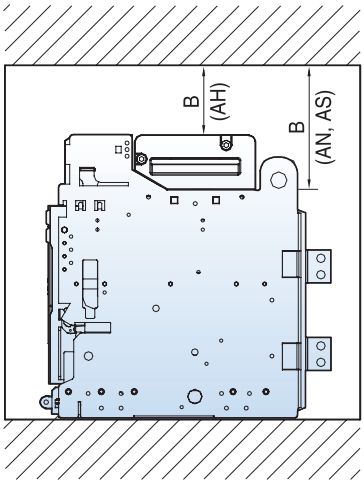

Type		A	B
Fixed	AN/AS	50	150
	AH	50	150
Draw out	AN/AS	50	150
	AH	50	0

Note) When drawing the distribution panel, it is available to use regardless of the distance between ACB and the wall of the panel because Susol ACB(draw-in/out type) extinguishes the arc in the Arc Chute and Arc Cover clearly.

Minimum isolation distance

For the safety, all the electric charging parts need to be installed over minimum isolation distance.

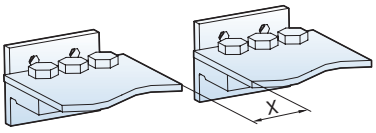

Insulating voltage (Ui)	Minimum isolation distance (X min)
600V	8 mm
1000V	14 mm

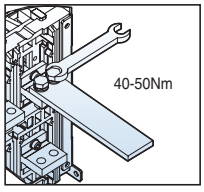

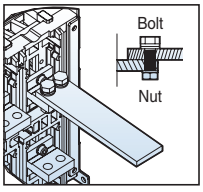

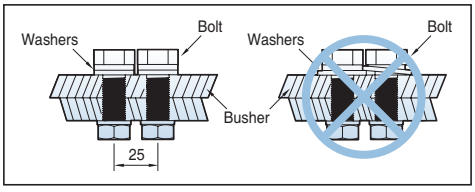

Screw type	Tightening torque			
	Standard(kgf·cm)	Tolerance	Standard(N.m)	Tolerance
M8	135	±16	13.3	±1.6
M10	270	±32	26.5	±3.2
M12	480	±57	46.6	±5.6

Temperature derating

The table below indicates the maximum current rating, for each connection type,
as a function of the ambient temperature around the circuit breaker and the busbars.
Circuit breakers with mixed connections have the same derating as horizontally connected breakers.
For ambient temperatures greater than 60°C, consult us.
Temperature inside the switchboard around the circuit breaker and its connection: T_i(IEC 60947-2)

Frame	Rated current	ACB terminal	Applicable busbar size										
				Horizontal type					Vertical type				
				40°C	45°C	50°C	55°C	60°C	40°C	45°C	50°C	55°C	60°C
1600AF AN-D AS-D AH-D	200A	15t×50×1EA	5t×50×1EA	200A	200A	200A	200A	200A	200A	200A	200A	200A	200A
	400A			400A	400A	400A	400A	400A	400A	400A	400A	400A	400A
	630A		5t×50×2EA	630A	630A	630A	630A	630A	630A	630A	630A	630A	630A
			10t×60×1EA										
	800A		6t×50×2EA	800A	800A	800A	800A	800A	800A	800A	800A	800A	800A
			10t×60×1EA										
	1,000A		8t×50×2EA	1000A	1000A	1000A	1000A	1000A	1000A	1000A	1000A	1000A	1000A
	1,250A		6t×75×2EA	-	-	-	-	-	1250A	1250A	1250A	1250A	1250A
			8t×60×2EA	1250A	1250A	1250A	1250A	1250A					
			10t×50×2EA										
	1,600A		6t×75×3EA	-	-	-	-	-	1600A	1600A	1580A	1550A	1500A
			10t×60×2EA	1600A	1600A	1520A	1480A	1420A					
			8t×60×3EA										
2000AF AS/AH-D	2,000A	15t×75×1EA	8t×75×3EA	-	-	-	-	-	2000A	2000A	1940A	1860A	1780A
			10t×100×2EA										
3200AF AS-E AH-E	630A	20t×75×1EA	5t×50×2EA	630A	630A	630A	630A	630A	630A	630A	630A	630A	630A
			10t×60×1EA										
	800A		6t×50×2EA	800A	800A	800A	800A	800A	800A	800A	800A	800A	800A
			10t×60×1EA										
	1,000A		8t×50×2EA	1000A	1000A	1000A	1000A	1000A	1000A	1000A	1000A	1000A	1000A
	1,250A		6t×75×2EA	-	-	-	-	-	1250A	1250A	1250A	1250A	1250A
			8t×60×2EA	1250A	1250A	1250A	1250A	1250A					
			10t×50×2EA										
	1,600A		6t×75×3EA	-	-	-	-	-	1600A	1600A	1600A	1600A	1600A
			10t×60×2EA	1600A	1600A	1600A	1600A	1600A					
			8t×60×3EA										
	2,000A		8t×75×3EA	2000A	2000A	2000A	2000A	2000A	2000A	2000A	2000A	2000A	2000A
			10t×100×2EA	-	-	-	-	-					
	2,500A		10t×75×3EA	2500A	2500A	2500A	2400A	2300A	2500A	2500A	2500A	2500A	2400A
			8t×75×4EA										
	3,200A		10t×100×3EA	-	-	-	-	-	3200A	3200A	3120A	3050A	2950A
			10t×75×4EA	3200A	3200A	3100A	3000A	2900A					
4000AF AS/AH-E	4,000A	10t×100×3EA	10t×100×4EA	-	-	-	-	-	4000A	4000A	3950A	3800A	3680A
			10t×75×5EA	-	-	-	-	-					
5000AF AS-F	4,000A	20t×125×2EA	10t×100×4EA	4000A	4000A	3920A	3860A	3800A	4000A	4000A	3960A	3900A	3880A
	5,000A		10t×125×4EA	5000A	5000A	4900A	4800A	4700A	5000A	5000A	4950A	4900A	4850A
6300AF AS-G AH-G	4,000A	20t×125×2EA	10t×100×4EA	4000A	4000A	4000A	4000A	4000A	4000A	4000A	4000A	4000A	4000A
	5,000A		10t×125×4EA	5000A	5000A	4900A	4820A	4750A	5000A	5000A	4950A	4870A	4850A
	6,300A	20t×150×2EA	10t×150×4EA	6300A	6300A	6170A	6040A	5900A	6300A	6300A	6220A	6160A	6100A

Operating conditions

Ambient temperature

ACB devices can operate under the following temperature conditions
- The electrical and mechanical characteristics are stipulated for an ambient temperature of -5°C to +40°C
- The average temperature should be within + 35°C
- Reduce the continuous conducting current when the temperature is over 45°C (refer to temperature derating)
- Storage condition : -20°C to + 60°C is recommended.

Altitude

Susol ACB is designed for operation at altitudes under 2000m. At altitudes higher than 2000m, emitting heat is lowered and operating voltage, continuous current capacity, and breaking capacity will be reduced. Durability of the insulation is also reduced according to the atmosphere pressure. According to the below table, change the ratings upon a service condition.

Item \ Altitude [m]	2000m	3000m	4000m	5000m
Withstand voltage [V]	3500	3150	2500	2100
Average insulating voltage [V]	1000	900	700	600
Max. using voltage [V]	690	590	520	460
Current compensation constant	1×In	0.98×In	0.96×In	0.94×In

Environment

Under clean air;
Maximum temperature + 40°C (relative humidity should be under 85%)
Maximum temperature + 20°C (relative humidity should be under 90%)
Do not apply under corrosive or ammonia gas circumstances
($H_2S \leq 0.01$ppm, $SO_2 \leq 0.01$ppm, $NH_3 \leq$ a few ppm)

*** Extreme atmosphere conditions**

Under high temperature and/or high humidity, the insulation durability, electrical and mechanical features could be deteriorated. At this conditions, increasing corrosion-resistant dealing needs. Corrosion-resistant parts need under this conditions.

Internal resistance and power consumption (per pole)

AF	Rated current (A)	Fixed type		Draw-out type	
		Inner resistance (mΩ)	Power consumption (W/3Phase)	Inner resistance (mΩ)	Power consumption (W/3Phase)
AN-16D	630	0.02	24	0.04	48
	800	0.02	38	0.04	77
	1,000	0.02	60	0.04	120
	1,250	0.02	94	0.04	188
	1,600	0.02	154	0.04	307
AH/AS-20D	630	0.015	18	0.03	36
	800	0.015	29	0.03	58
	1,000	0.015	45	0.03	90
	1,250	0.015	70	0.03	141
	1,600	0.015	115	0.03	230
	2,000	0.013	156	0.027	324
AH/AS-32E	2,000	0.01	120	0.02	240
	2,500	0.01	188	0.02	375
	3,200	0.01	307	0.02	614
AH/AS-40E	2,000	0.01	120	0.02	240
	2,500	0.01	188	0.02	375
	3,200	0.01	307	0.02	614
	4,000	0.008	384	0.011	528
AS-50F	4,000	0.008	384	0.011	528
	5,000	0.008	600	0.011	825
AH/AS-63G	4,000	0.006	288	0.009	432
	5,000	0.006	450	0.009	675
	6,300	0.005	595	0.007	833

Note) 1. Above power consumption is whole power consumption for each Rated current, 50/60Hz, 3/4pole.
2. This is inner assistant value per 1 pole.
3. Power factor = 1.0

Installation recommendation

BUS-BAR Connection

Cables connections

Make sure that no excessive mechanical force put on the rear terminals for cable connection.
Extension terminal is fixed such as B, C and cable is to fixed to the frame such as E

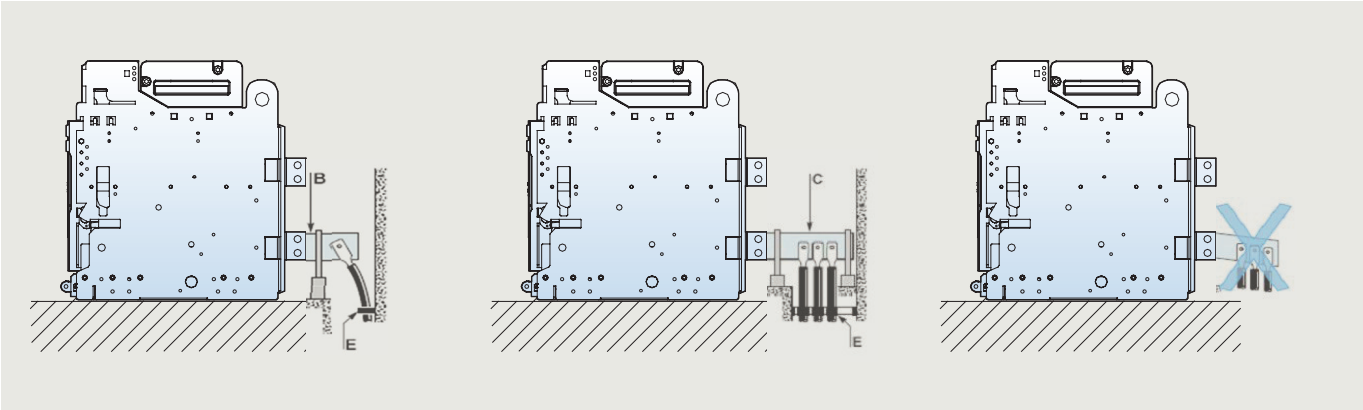

Bus-bar connection

For busbar connection, connect access parts with a provided torque and fix with parallel installing the support not to apply terminal weight to circuit breaker.
In order to prevent the spread safety or secondary accidents, secure maximum safe distance A (Table 1) from the access area to withstand the electrical force during the short circuit faults.

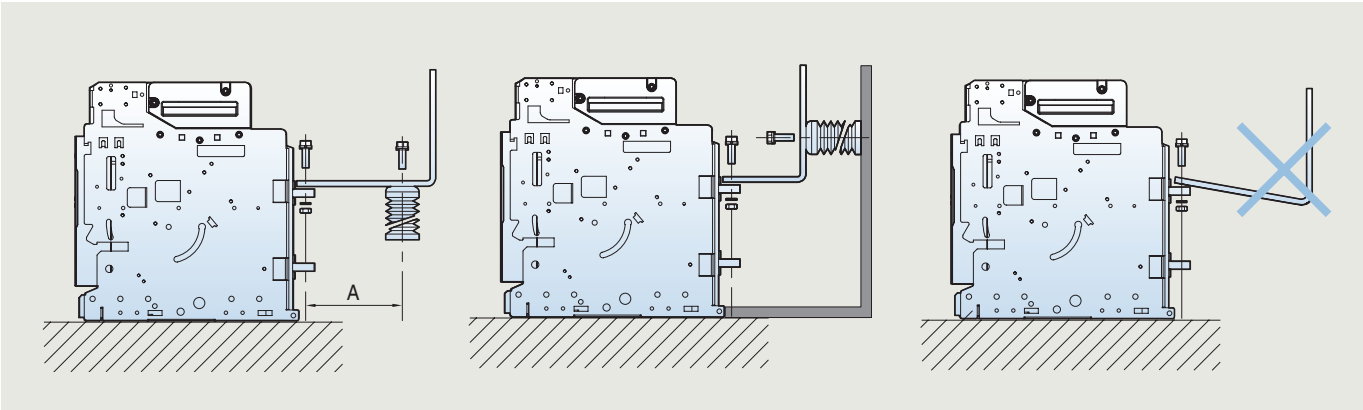

(Table 1) Maximum safe distance A

Short capacity (kA)	30	50	65	80	100	150
Length A (mm)	350	300	250	150	150	150

Installation recommendation

Protection degree provided by enclosures (IP Code) IEC 60529

IP □ □

- First characteristic numeral ×(numerals 0 to 6, or letter ×)
- Second characteristic numeral ×(numerals 0 to 8, or letter ×)
- Code letters (international Protection)

First characteristic numeral

	Degree of protection	
	Brief description	Definition
0	Non-protected	-
1	Protected against solid foreign objects of 50mm Ø and greater	The object probe sphere of 50mm Ø, shall not fully penetrate
2	Protected against solid foreign objects of 12.5mm Ø and greater	The object probe sphere of 12.5mm Ø, shall not fully penetrate
3	Protected against solid foreign objects of 2.5mm Ø and greater	The object probe sphere of 2.5mm Ø, shall not penetrate at all
4	Protected against solid foreign objects of 1.0mm Ø and greater	The object probe of 1.0mm Ø, shall not penetrate at all
5	Dust-protected	Ingress of dust is not totally prevented, but dust shall not penetrate in a quantity to interfere with satisfactory operation of the apparatus or to impair safety
6	Dust-tight	No ingress of dust

Second characteristic numeral

	Degree of protection	
	Brief description	Definition
0	Non-protected	-
1	Protected against vertically falling water drops	Vertically falling drops shall have no harmful effects
2	Protected against vertically falling water drops when enclosure tilted up to 15°	Vertically falling drops shall have no harmful effects when the enclosure is tilted at any angle up to 15° on either side of the vertical
3	Protected against spraying water	Water sprayed at an angle up to 60° on wither side of the vertical shall have no harmful effects
4	Protected against spraying water	Water splashed against the enclosure from and direction shall have no harmful effects
5	Protected against spraying jets	Water projected in powerful jets against the enclosure from and direction shall have no harmful effects
6	Protected against powerful water jets	Water projected in powerful jets against the enclosure from any direction shall have no harmful effects
7	Protected against the effects of temporary immersion in water	Ingress of water in quantities causing harmful effects shall not be possible when the enclosure is temporarily immersed in water under standardized conditions of pressure and time
8	Protected against the effects of continuous immersion in water	Ingress of water in quantities causing harmful effects shall not be possible when the enclosure is continuously immersed in water under conditions which shall be agreed between manufacturer and used but which are more severs than for numeral 7

Derating table

ambient temperature outside of the switchboard:Ta (IEC 60439-1)

Switchboard compsition (2300×800×900) / Connection type		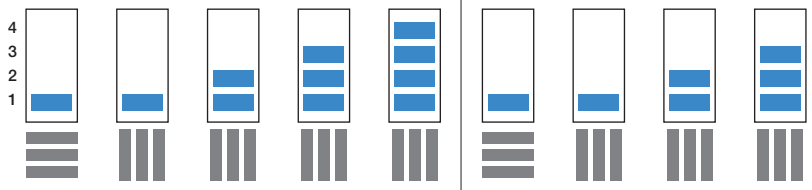									
Model type		Model type AS/AH-06/08E, AN-06/08D						AS/AH-10E, AN-10D			
Busbar dimensions(mm)		2EA-50×6						2EA-50×8			
Ventilated switchboard(IP31)  Area of outlet vents: 350cm² Area of intlet vents: 350cm²	Ta=35℃	4					800 ↓				
		3				800 ↓	800 ↓				1000
		2			800 ↓	800 ↓	800 ↓			1000	1000
		1	800 ↓	800 ↓	800 ↓	800 ↓	800 ↓	1000	1000	1000	1000
	Ta=45℃	4					800 ↓				
		3				800 ↓	800 ↓				1000
		2			800 ↓	800 ↓	800 ↓			1000	1000
		1	800 ↓	800 ↓	800 ↓	800 ↓	800 ↓	1000	1000	1000	1000
	Ta=55℃	4					800 ↓				
		3				800 ↓	800 ↓				1000
		2			800 ↓	800 ↓	800 ↓			1000	1000
		1	800 ↓	800 ↓	800 ↓	800 ↓	800 ↓	1000	1000	1000	1000
Non Ventilated switchboard(IP41/54) 	Ta=35℃	4					800 ↓				
		3				800 ↓	800 ↓				1000
		2			800 ↓	800 ↓	800 ↓			1000	1000
		1	800 ↓	800 ↓	800 ↓	800 ↓	800 ↓	1000	1000	1000	1000
	Ta=45℃	4					800 ↓				
		3				800 ↓	800 ↓				1000
		2			800 ↓	800 ↓	800 ↓			1000	1000
		1	800 ↓	800 ↓	800 ↓	800 ↓	800 ↓	1000	1000	1000	1000
	Ta=55℃	4					800 ↓				
		3				800 ↓	800 ↓				1000
		2			800 ↓	800 ↓	800 ↓			1000	1000
		1	800 ↓	800 ↓	800 ↓	800 ↓	800 ↓	1000	1000	1000	1000

Installation recommendation

Derating table

ambient temperature outside of the switchboard:Ta (IEC 60439-1)

Switchboard compsition (2300×800×900) / Connection type			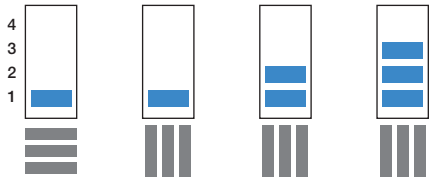						
Model type			AS/AH-13E, AN-13D				AS/AH-16E, AN-16D		
Busbar dimensions(mm)			2EA-75×6				2EA-60×10		
Ventilated switchboard(IP31)  Area of outlet vents: 350cm² Area of intlet vents: 350cm²	Ta=35℃	4							
		3				1250			
		2			1250	1250			1600
		1	1250	1250	1250	1250	1600	1600	1600
	Ta=45℃	4							
		3				1250			
		2			1250	1250			1600
		1	1250	1250	1250	1250	1600	1600	1600
	Ta=55℃	4							
		3				1250			
		2			1250	1250			1470
		1	1250	1250	1250	1250	1500	1600	1600
Non Ventilated switchboard(IP41/54) 	Ta=35℃	4							
		3				1250			
		2			1250	1250			1600
		1	1250	1250	1250	1250	1600	1600	1600
	Ta=45℃	4							
		3				1250			
		2			1250	1250			1500
		1	1250	1250	1250	1250	1480	1600	1600
	Ta=55℃	4							
		3				1250			
		2			1250	1250			1400
		1	1250	1250	1250	1250	1400	1520	1500

Derating table

ambient temperature outside of the switchboard:Ta (IEC 60439-1)

Switchboard compsition (2300×800×900) / Connection type		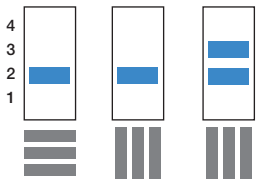			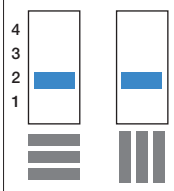		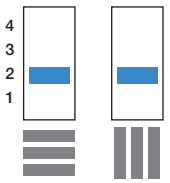		
Model type		AN/AS/AH-20E,			AN/AS/AH-25E		AN/AS/AH-32E		AS/AH-40E
Busbar dimensions(mm)		2EA-75×10			3EA-75×10		4EA-75×10		4EA-75×10
Ventilated switchboard(IP31)  Area of outlet vents: 350cm² Area of intlet vents: 350cm²	Ta=35℃	4							
		3			2000				
		2	2000	2000	2000	2400	2500	3100	3200	3750
		1							
	Ta=45℃	4							
		3			2000				
		2	2000	2000	2000	2300	2400	2900	3100	3550
		1							
	Ta=55℃	4							
		3			2000				
		2	2000	2000	2000	2200	2300	2700	2900	3300
		1							
Non Ventilated switchboard(IP41/54) 	Ta=35℃	4							
		3			2000				
		2	2000	2000	2000	2115	2275	2650	2850	3320
		1							
	Ta=45℃	4							
		3			1900				
		2	1900	1960	1960	2000	2150	2550	2700	3120
		1							
	Ta=55℃	4							
		3			1780				
		2	1800	1920	1920	1900	2020	2370	2530	2960
		1							

Installation recommendation

Derating table

ambient temperature outside of the switchboard:Ta (IEC 60439-1)

Switchboard compsition (2300×800×900) / Connection type			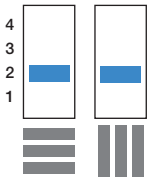		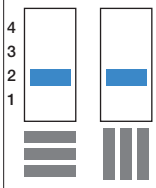		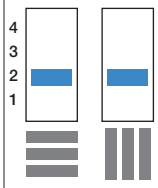		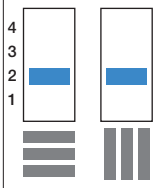		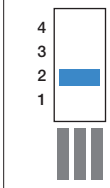
Model type			AS-40F		AS-50F		AS/AH-40G		AS/AH-50G		AS/AH-63G
Busbar dimensions(mm)			4EA-100×10		4EA-125×10		4EA-100×10		4EA-125×10		4EA-150×10
Ventilated switchboard(IP31)  Area of outlet vents: 500cm² Area of intlet vents: 500cm²	Ta=35℃	4									
		3									
		2	3900	4000	4750	4800	4000	4000	4750	5000	5850
		1									
	Ta=45℃	4									
		3									
		2	3850	3900	4350	4650	4000	4000	4450	4850	5670
		1									
	Ta=55℃	4									
		3									
		2	3800	3850	4200	4400	4000	4000	4200	4600	5350
		1									
Non Ventilated switchboard(IP41/54) 	Ta=35℃	4									
		3									
		2	3800	3900	4200	4550	4000	4000	4400	4650	5290
		1									
	Ta=45℃	4									
		3									
		2	3650	3800	3950	4250	4000	4000	4100	4400	5040
		1									
	Ta=55℃	4									
		3									
		2	3550	3650	3700	4050	3900	3950	3850	4150	4730
		1									

Protective coordination

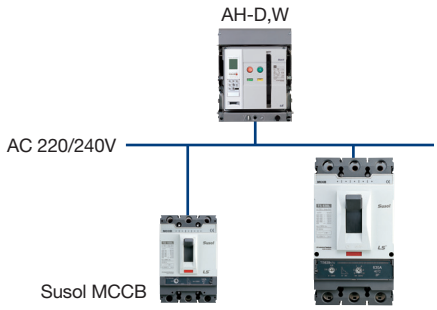

Rated voltage: AC 220/240V
Main breaker(Main ACB): Susol ACB
Downstream breaker(Downstream MCCB): Susol MCCB TD/TS series
Below protective coordination table is based on ACB equipped with OCR under arrangement of short time delay trip current as 10 times of rated current.

Upstream breaker / Downstream breaker			Product type	Susol AH series									
				AH-D,W									
				AH-06D			AH-08D			AH-10D	AH-13D	AH-16D	AH-20D
			Rated current [A]	200	400	630	400	630	800	1000	1250	1600	2000
			Short time delay trip current (Max. 10In) Is [kA]	2	4	6.3	4	6.3	8	10	12.5	16	20
Model		Rated current [A]	Ultimate breaking capacity Icu [kA]	85									
Susol MCCB	TD100N	100	85	T	T	T	T	T	T	T	T	T	T
	TD100H	100	100	T	T	T	T	T	T	T	T	T	T
	TD100L	100	200	T	T	T	T	T	T	T	T	T	T
	TD160N	160	85	T	T	T	T	T	T	T	T	T	T
	TD160H	160	100	T	T	T	T	T	T	T	T	T	T
	TD160L	160	200	T	T	T	T	T	T	T	T	T	T
	TS100N	100	100	T	T	T	T	T	T	T	T	T	T
	TS100H	100	120	T	T	T	T	T	T	T	T	T	T
	TS100L	100	200	T	T	T	T	T	T	T	T	T	T
	TS160N	160	100	T	T	T	T	T	T	T	T	T	T
	TS160H	160	120	T	T	T	T	T	T	T	T	T	T
	TS160L	160	200	T	T	T	T	T	T	T	T	T	T
	TS250N	250	100		T	T	T	T	T	T	T	T	T
	TS250H	250	120		T	T	T	T	T	T	T	T	T
	TS250L	250	200		T	T	T	T	T	T	T	T	T
	TS400N	400	100			T		T	T	T	T	T	T
	TS400H	400	120			T		T	T	T	T	T	T
	TS400L	400	200			T		T	T	T	T	T	T
	TS630N	630	100						T	T	T	T	T
	TS630H	630	120						T	T	T	T	T
	TS630L	630	200						T	T	T	T	T
	TS800N	800	100							T	T	T	T
	TS800H	800	120							T	T	T	T
	TS800L	800	200							T	T	T	T

Note) 1. On table, protective coordination is not available for areas where number is missing.
2. On table, marked number is breaking capacity limit (Unit: kA) for protective coordination.
3. On table, areas that is marked as T are capable of total discrimination up to its Downstream breaker's rated short breaking capacity.

Protective coordination

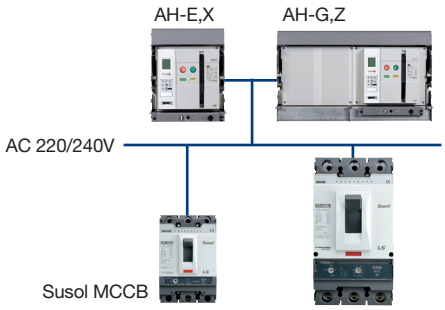

Rated voltage: AC 220/240V
Main breaker(Main ACB): Susol ACB
Downstream breaker(Downstream MCCB): Susol MCCB TD/TS series
Below protective coordination table is based on ACB equipped with OCR under arrangement of short time delay trip current as 10 times of rated current.

Upstream breaker / Downstream breaker			Product type	Susol AH series												
				AH-E,X										AH-G,Z		
				AH-06E		AH-08E	AH-10E	AH-13E	AH-16E	AH-20E	AH-25E	AH-32E	AH-40E	AH-40G	AH-50G	AH-63G
			Rated current [A]	400	630	800	1000	1250	1600	2000	2500	3200	4000	4000	5000	6300
			Short time delay trip current (Max. 10In) Is[kA]	4	6.3	8	10	12.5	16	20	25	32	40	40	50	63
Model		Rated current [A]	Ultimate breaking capacity Icu [kA]	100										150		
Susol MCCB	TD100N	100	85	T	T	T	T	T	T	T	T	T	T	T	T	T
	TD100H	100	100	T	T	T	T	T	T	T	T	T	T	T	T	T
	TD100L	100	200	T	T	T	T	T	T	T	T	T	T	T	T	T
	TD160N	160	85	T	T	T	T	T	T	T	T	T	T	T	T	T
	TD160H	160	100	T	T	T	T	T	T	T	T	T	T	T	T	T
	TD160L	160	200	T	T	T	T	T	T	T	T	T	T	T	T	T
	TS100N	100	100	T	T	T	T	T	T	T	T	T	T	T	T	T
	TS100H	100	120	T	T	T	T	T	T	T	T	T	T	T	T	T
	TS100L	100	200	T	T	T	T	T	T	T	T	T	T	T	T	T
	TS160N	160	100	T	T	T	T	T	T	T	T	T	T	T	T	T
	TS160H	160	120	T	T	T	T	T	T	T	T	T	T	T	T	T
	TS160L	160	200	T	T	T	T	T	T	T	T	T	T	T	T	T
	TS250N	250	100	T	T	T	T	T	T	T	T	T	T	T	T	T
	TS250H	250	120	T	T	T	T	T	T	T	T	T	T	T	T	T
	TS250L	250	200	T	T	T	T	T	T	T	T	T	T	T	T	T
	TS400N	400	100		T	T	T	T	T	T	T	T	T	T	T	T
	TS400H	400	120		T	T	T	T	T	T	T	T	T	T	T	T
	TS400L	400	200		T	T	T	T	T	T	T	T	T	T	T	T
	TS630N	630	100			T	T	T	T	T	T	T	T	T	T	T
	TS630H	630	120			T	T	T	T	T	T	T	T	T	T	T
	TS630L	630	200			T	T	T	T	T	T	T	T	T	T	T
	TS800N	800	100				T	T	T	T	T	T	T	T	T	T
	TS800H	800	120				T	T	T	T	T	T	T	T	T	T
	TS800L	800	200				T	T	T	T	T	T	T	T	T	T

Note) 1. On table, protective coordination is not available for areas where number is missing.
2. On table, marked number is breaking capacity limit (Unit: kA) for protective coordination.
3. On table, areas that is marked as T are capable of total discrimination up to its Downstream breaker's rated short breaking capacity.

Protective coordination

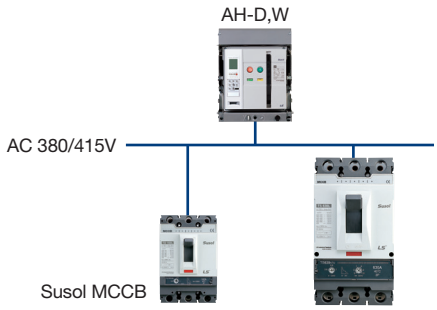

Rated voltage: AC 380/415V
Main breaker(Main ACB): Susol ACB
Downstream breaker(Downstream MCCB): Susol MCCB TD/TS series
Below protective coordination table is based on ACB equipped with OCR under arrangement of short time delay trip current as 10 times of rated current.

Upstream breaker / Downstream breaker			Product type	Susol AH series									
				AH-D,W									
				AH-06D			AH-08D			AH-10D	AH-13D	AH-16D	AH-20D
			Rated current [A]	200	400	630	400	630	800	1000	1250	1600	2000
			Short time delay trip current (Max. 10In) Is [kA]	2	4	6.3	4	6.3	8	10	12.5	16	20
Model		Rated current [A]	Ultimate breaking capacity Icu [kA]	85									
Susol MCCB	TD100N	100	50	T	T	T	T	T	T	T	T	T	T
	TD100H	100	85	T	T	T	T	T	T	T	T	T	T
	TD100L	100	150	T	T	T	T	T	T	T	T	T	T
	TD160N	160	50	T	T	T	T	T	T	T	T	T	T
	TD160H	160	85	T	T	T	T	T	T	T	T	T	T
	TD160L	160	150	T	T	T	T	T	T	T	T	T	T
	TS100N	100	50	T	T	T	T	T	T	T	T	T	T
	TS100H	100	85	T	T	T	T	T	T	T	T	T	T
	TS100L	100	150	T	T	T	T	T	T	T	T	T	T
	TS160N	160	50	T	T	T	T	T	T	T	T	T	T
	TS160H	160	85	T	T	T	T	T	T	T	T	T	T
	TS160L	160	150	T	T	T	T	T	T	T	T	T	T
	TS250N	250	50		T	T	T	T	T	T	T	T	T
	TS250H	250	85		T	T	T	T	T	T	T	T	T
	TS250L	250	150		T	T	T	T	T	T	T	T	T
	TS400N	400	65			T		T	T	T	T	T	T
	TS400H	400	85			T		T	T	T	T	T	T
	TS400L	400	150			T		T	T	T	T	T	T
	TS630N	630	65						T	T	T	T	T
	TS630H	630	85						T	T	T	T	T
	TS630L	630	150						T	T	T	T	T
	TS800N	800	65							T	T	T	T
	TS800H	800	100							T	T	T	T
	TS800L	800	150							T	T	T	T

Note) 1. On table, protective coordination is not available for areas where number is missing.
2. On table, marked number is breaking capacity limit (Unit: kA) for protective coordination.
3. On table, areas that is marked as T are capable of total discrimination up to its Downstream breaker's rated short breaking capacity.

Protective coordination

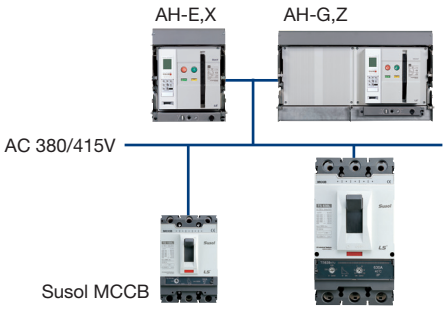

Rated voltage: AC 380/415V
Main breaker(Main ACB): Susol ACB
Downstream breaker(Downstream MCCB): Susol MCCB TD/TS series
Below protective coordination table is based on ACB equipped with OCR under arrangement of short time delay trip current as 10 times of rated current.

Upstream breaker / Downstream breaker			Product type	Susol AH series												
				AH-E,X										AH-G,Z		
				AH-06E		AH-08E	AH-10E	AH-13E	AH-16E	AH-20E	AH-25E	AH-32E	AH-40E	AH-40G	AH-50G	AH-63G
			Rated current [A]	400	630	800	1000	1250	1600	2000	2500	3200	4000	4000	5000	6300
			Short time delay trip current (Max. 10In) Is[kA]	4	6.3	8	10	12.5	16	20	25	32	40	40	50	63
Model		Rated current [A]	Ultimate breaking capacity Icu [kA]	100										150		
Susol MCCB	TD100N	100	50	T	T	T	T	T	T	T	T	T	T	T	T	T
	TD100H	100	85	T	T	T	T	T	T	T	T	T	T	T	T	T
	TD100L	100	150	T	T	T	T	T	T	T	T	T	T	T	T	T
	TD160N	160	50	T	T	T	T	T	T	T	T	T	T	T	T	T
	TD160H	160	85	T	T	T	T	T	T	T	T	T	T	T	T	T
	TD160L	160	150	T	T	T	T	T	T	T	T	T	T	T	T	T
	TS100N	100	50	T	T	T	T	T	T	T	T	T	T	T	T	T
	TS100H	100	85	T	T	T	T	T	T	T	T	T	T	T	T	T
	TS100L	100	150	T	T	T	T	T	T	T	T	T	T	T	T	T
	TS160N	160	50	T	T	T	T	T	T	T	T	T	T	T	T	T
	TS160H	160	85	T	T	T	T	T	T	T	T	T	T	T	T	T
	TS160L	160	150	T	T	T	T	T	T	T	T	T	T	T	T	T
	TS250N	250	50	T	T	T	T	T	T	T	T	T	T	T	T	T
	TS250H	250	85	T	T	T	T	T	T	T	T	T	T	T	T	T
	TS250L	250	150	T	T	T	T	T	T	T	T	T	T	T	T	T
	TS400N	400	65		T	T	T	T	T	T	T	T	T	T	T	T
	TS400H	400	85		T	T	T	T	T	T	T	T	T	T	T	T
	TS400L	400	150		T	T	T	T	T	T	T	T	T	T	T	T
	TS630N	630	65			T	T	T	T	T	T	T	T	T	T	T
	TS630H	630	85			T	T	T	T	T	T	T	T	T	T	T
	TS630L	630	150			T	T	T	T	T	T	T	T	T	T	T
	TS800N	800	65				T	T	T	T	T	T	T	T	T	T
	TS800H	800	100				T	T	T	T	T	T	T	T	T	T
	TS800L	800	150				T	T	T	T	T	T	T	T	T	T

Note) 1. On table, protective coordination is not available for areas where number is missing.
2. On table, marked number is breaking capacity limit (Unit: kA) for protective coordination.
3. On table, areas that is marked as T are capable of total discrimination up to its Downstream breaker's rated short breaking capacity.

Protective coordination

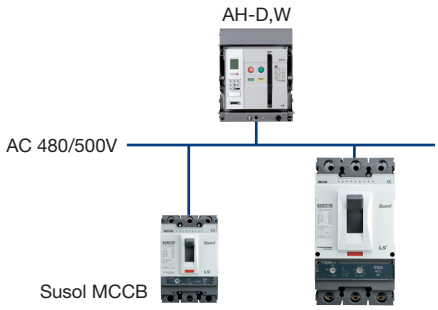

Rated voltage: AC 480/500V
Main breaker(Main ACB): Susol ACB
Downstream breaker(Downstream MCCB): Susol MCCB TD/TS series
Below protective coordination table is based on ACB equipped with OCR under arrangement of short time delay trip current as 10 times of rated current.

Upstream breaker / Downstream breaker			Product type	Susol AH series									
				AH-D,W									
				AH-06D			AH-08D			AH-10D	AH-13D	AH-16D	AH-20D
			Rated current [A]	200	400	630	400	630	800	1000	1250	1600	2000
			Short time delay trip current (Max. 10In) Is [kA]	2	4	6.3	4	6.3	8	10	12.5	16	20
Model		Rated current [A]	Ultimate breaking capacity Icu [kA]	85									
Susol MCCB	TD100N	100	30	T	T	T	T	T	T	T	T	T	T
	TD100H	100	50	T	T	T	T	T	T	T	T	T	T
	TD100L	100	65	T	T	T	T	T	T	T	T	T	T
	TD160N	160	30	T	T	T	T	T	T	T	T	T	T
	TD160H	160	50	T	T	T	T	T	T	T	T	T	T
	TD160L	160	65	T	T	T	T	T	T	T	T	T	T
	TS100N	100	42	T	T	T	T	T	T	T	T	T	T
	TS100H	100	65	T	T	T	T	T	T	T	T	T	T
	TS100L	100	85	T	T	T	T	T	T	T	T	T	T
	TS160N	160	42	T	T	T	T	T	T	T	T	T	T
	TS160H	160	65	T	T	T	T	T	T	T	T	T	T
	TS160L	160	85	T	T	T	T	T	T	T	T	T	T
	TS250N	250	42		T	T	T	T	T	T	T	T	T
	TS250H	250	65		T	T	T	T	T	T	T	T	T
	TS250L	250	85		T	T	T	T	T	T	T	T	T
	TS400N	400	42			T		T	T	T	T	T	T
	TS400H	400	65			T		T	T	T	T	T	T
	TS400L	400	85			T		T	T	T	T	T	T
	TS630N	630	42						T	T	T	T	T
	TS630H	630	65						T	T	T	T	T
	TS630L	630	85						T	T	T	T	T
	TS800N	800	42							T	T	T	T
	TS800H	800	85							T	T	T	T
	TS800L	800	100							T	T	T	T

Note) 1. On table, protective coordination is not available for areas where number is missing.
2. On table, marked number is breaking capacity limit (Unit: kA) for protective coordination.
3. On table, areas that is marked as T are capable of total discrimination up to its Downstream breaker's rated short breaking capacity.

Protective coordination

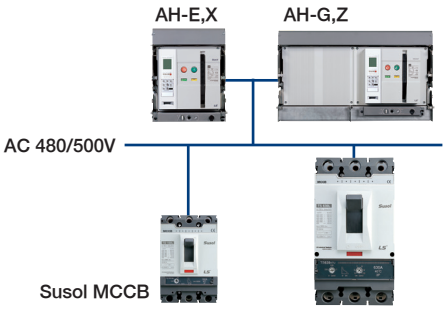

Rated voltage: AC 480/500V
Main breaker(Main ACB): Susol ACB
Downstream breaker(Downstream MCCB): Susol MCCB TD/TS series
Below protective coordination table is based on ACB equipped with OCR under arrangement of short time delay trip current as 10 times of rated current.

Upstream breaker / Downstream breaker		Product type	Susol AH series												
			AH-E,X										AH-G,Z		
			AH-06E		AH-08E	AH-10E	AH-13E	AH-16E	AH-20E	AH-25E	AH-32E	AH-40E	AH-40G	AH-50G	AH-63G
		Rated current [A]	400	630	800	1000	1250	1600	2000	2500	3200	4000	4000	5000	6300
		Short time delay trip current (Max. 10In) Is[kA]	4	6.3	8	10	12.5	16	20	25	32	40	40	50	63
Model		Rated current [A]	Ultimate breaking capacity Icu [kA]	100									150		
Susol MCCB	TD100N	100	30	T	T	T	T	T	T	T	T	T	T	T	T
	TD100H	100	50	T	T	T	T	T	T	T	T	T	T	T	T
	TD100L	100	65	T	T	T	T	T	T	T	T	T	T	T	T
	TD160N	160	30	T	T	T	T	T	T	T	T	T	T	T	T
	TD160H	160	50	T	T	T	T	T	T	T	T	T	T	T	T
	TD160L	160	65	T	T	T	T	T	T	T	T	T	T	T	T
	TS100N	100	42	T	T	T	T	T	T	T	T	T	T	T	T
	TS100H	100	65	T	T	T	T	T	T	T	T	T	T	T	T
	TS100L	100	85	T	T	T	T	T	T	T	T	T	T	T	T
	TS160N	160	42	T	T	T	T	T	T	T	T	T	T	T	T
	TS160H	160	65	T	T	T	T	T	T	T	T	T	T	T	T
	TS160L	160	85	T	T	T	T	T	T	T	T	T	T	T	T
	TS250N	250	42	T	T	T	T	T	T	T	T	T	T	T	T
	TS250H	250	65	T	T	T	T	T	T	T	T	T	T	T	T
	TS250L	250	85	T	T	T	T	T	T	T	T	T	T	T	T
	TS400N	400	42		T	T	T	T	T	T	T	T	T	T	T
	TS400H	400	65		T	T	T	T	T	T	T	T	T	T	T
	TS400L	400	85		T	T	T	T	T	T	T	T	T	T	T
	TS630N	630	42			T	T	T	T	T	T	T	T	T	T
	TS630H	630	65			T	T	T	T	T	T	T	T	T	T
	TS630L	630	85			T	T	T	T	T	T	T	T	T	T
	TS800N	800	42				T	T	T	T	T	T	T	T	T
	TS800H	800	85				T	T	T	T	T	T	T	T	T
	TS800L	800	100				T	T	T	T	T	T	T	T	T

Note) 1. On table, protective coordination is not available for areas where number is missing.
2. On table, marked number is breaking capacity limit (Unit: kA) for protective coordination.
3. On table, areas that is marked as T are capable of total discrimination up to its Downstream breaker's rated short breaking capacity.

Protective coordination

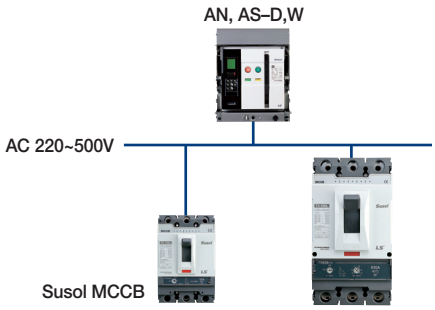

Rated voltage: AC 220~500V
Main breaker(Main ACB): Metasol ACB
Downstream breaker(Downstream MCCB): Susol MCCB TD/TS series
Below protective coordination table is based on ACB equipped with OCR under arrangement of short time delay trip current as 10 times of rated current.

Upstream breaker / Downstream breaker			Product type	Susol AN, AS Series											
				AN, AS-D,W										AS-F,Y	
				AN, AS-06D			AN, AS-06D			AN, AS-10D	AN, AS-13D	AN, AS-13D	AN, AS-16D	AS-40F	AS-50F
			Rated current [A]	200	400	630	400	630	800	1000	1250	1600	2000	4000	5000
			Short time delay trip current (Max. 10In) Is[kA]	2	4	6.3	4	6.3	8	10	12.5	16	20	40	50
Model		Rated current [A]	Ultimate breaking capacity Icu [kA]	AN : 65kA / AS : 70kA										AS : 100kA	
Susol MCCB	TD100N	100	85	T	T	T	T	T	T	T	T	T	T	T	T
	TD100H	100	100	T	T	T	T	T	T	T	T	T	T	T	T
	TD100L	100	200	T	T	T	T	T	T	T	T	T	T	T	T
	TD160N	160	85	T	T	T	T	T	T	T	T	T	T	T	T
	TD160H	160	100	T	T	T	T	T	T	T	T	T	T	T	T
	TD160L	160	200	T	T	T	T	T	T	T	T	T	T	T	T
	TS100N	100	100	T	T	T	T	T	T	T	T	T	T	T	T
	TS100H	100	120	T	T	T	T	T	T	T	T	T	T	T	T
	TS100L	100	200	T	T	T	T	T	T	T	T	T	T	T	T
	TS160N	160	100	T	T	T	T	T	T	T	T	T	T	T	T
	TS160H	160	120	T	T	T	T	T	T	T	T	T	T	T	T
	TS160L	160	200	T	T	T	T	T	T	T	T	T	T	T	T
	TS250N	250	100	-	T	T	T	T	T	T	T	T	T	T	T
	TS250H	250	120	-	T	T	T	T	T	T	T	T	T	T	T
	TS250L	250	200	-	T	T	T	T	T	T	T	T	T	T	T
	TS400N	400	100	-	-	T	-	T	T	T	T	T	T	T	T
	TS400H	400	120	-	-	T	-	T	T	T	T	T	T	T	T
	TS400L	400	200	-	-	T	-	T	T	T	T	T	T	T	T
	TS630N	630	100	-	-	-	-	-	T	T	T	T	T	T	T
	TS630H	630	120	-	-	-	-	-	T	T	T	T	T	T	T
	TS630L	630	200	-	-	-	-	-	T	T	T	T	T	T	T
	TS800N	800	100	-	-	-	-	-	-	T	T	T	T	T	T
	TS800H	800	120	-	-	-	-	-	-	T	T	T	T	T	T
	TS800L	800	200	-	-	-	-	-	-	T	T	T	T	T	T

Note) 1. On table, protective coordination is not available for areas where number is missing.
2. On table, areas that is marked as T are capable of total discrimination up to its Downstream breaker's rated short breaking capacity.

Protective coordination

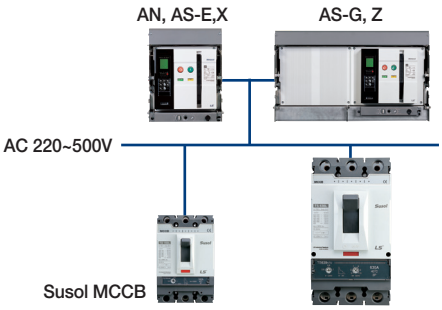

Rated voltage: AC 220~500V
Main breaker(Main ACB): Metasol ACB
Downstream breaker(Downstream MCCB): Susol MCCB TD/TS series
Below protective coordination table is based on ACB equipped with OCR under arrangement of short time delay trip current as 10 times of rated current.

Upstream breaker / Downstream breaker		Product type	Susol AN, AS Series												
			AN, AS-E,X										AS-G,Z		
			AS-06E		AS-08E	AS-10E	AS-13E	AS-16E	AN, AS-20E	AN, AS-25E	AN, AS-32E	AS-40E	AS-40G	AS-50G	AS-63G
		Rated current [A]	400	630	800	1000	1250	1600	2000	2500	3200	4000	4000	5000	6300
		Short time delay trip current (Max. 10In) Is[kA]	4	6.3	8	10	12.5	16	20	25	32	40	40	50	63
Model		Rated current [A]	Ultimate breaking capacity Icu [kA]	AN: 70kA / AS: 85kA									AS: 120kA		
Susol MCCB	TD100N	100	85	T	T	T	T	T	T	T	T	T	T	T	T
	TD100H	100	100	T	T	T	T	T	T	T	T	T	T	T	T
	TD100L	100	200	T	T	T	T	T	T	T	T	T	T	T	T
	TD160N	160	85	T	T	T	T	T	T	T	T	T	T	T	T
	TD160H	160	100	T	T	T	T	T	T	T	T	T	T	T	T
	TD160L	160	200	T	T	T	T	T	T	T	T	T	T	T	T
	TS100N	100	100	T	T	T	T	T	T	T	T	T	T	T	T
	TS100H	100	120	T	T	T	T	T	T	T	T	T	T	T	T
	TS100L	100	200	T	T	T	T	T	T	T	T	T	T	T	T
	TS160N	160	100	T	T	T	T	T	T	T	T	T	T	T	T
	TS160H	160	120	T	T	T	T	T	T	T	T	T	T	T	T
	TS160L	160	200	T	T	T	T	T	T	T	T	T	T	T	T
	TS250N	250	100	T	T	T	T	T	T	T	T	T	T	T	T
	TS250H	250	120	T	T	T	T	T	T	T	T	T	T	T	T
	TS250L	250	200	T	T	T	T	T	T	T	T	T	T	T	T
	TS400N	400	100	-	T	T	T	T	T	T	T	T	T	T	T
	TS400H	400	120	-	T	T	T	T	T	T	T	T	T	T	T
	TS400L	400	200	-	T	T	T	T	T	T	T	T	T	T	T
	TS630N	630	100	-	-	T	T	T	T	T	T	T	T	T	T
	TS630H	630	120	-	-	T	T	T	T	T	T	T	T	T	T
	TS630L	630	200	-	-	T	T	T	T	T	T	T	T	T	T
	TS800N	800	100	-	-	-	T	T	T	T	T	T	T	T	T
	TS800H	800	120	-	-	-	T	T	T	T	T	T	T	T	T
	TS800L	800	200	-	-	-	T	T	T	T	T	T	T	T	T

Note) 1. On table, protective coordination is not available for areas where number is missing.
2. On table, areas that is marked as T are capable of total discrimination up to its Downstream breaker's rated short breaking capacity.

AH, AS, AN series Air Circuit Breakers comply with the following international standard;

IEC 60947-1

Low-voltage switchgear and controlgear
- Part 1: General rules

IEC 60947-2

Low-voltage switchgear and controlgear
- Part 2: Circuit-breakers

The following certificates are available on a request.
- CE Declaration of conformity
- Certificate of conformance test (CB) - IEC 60947
- Full type test report issued by KEMA
- Letter of origin
- Taiwan TPC

CE conformity marking

The CE conformity marking shall indicate conformity to all the obligations imposed on the manufacturer, as regards his products, by virtue of the European Community directives providing for the affixing of the CE marking.
When the CE marking is affixed on a product, it represents a declaration of the manufacturer or of his authorized representative that the product in question conforms to all the applicable provisions including the conformity assessment procedures. This prevents the Member States from limiting the marketing and putting into service of products bearing the CE marking, unless this measure is justified by the proved non-conformity of the product.

IECEE CB SCHEME

The IECEE CB Scheme is the world's first truly international system for acceptance of test reports dealing with the safety of electrical and electronic products. It is a multilateral agreement among participating countries and certification organizations. A manufacturer utilizing a CB test report issued by one of these organizations can obtain national certification in all other member countries of the CB Scheme.
The Scheme is based on the use of international (IEC) Standards. If some members' national standards are not yet completely harmonized with IEC Standards, national differences are permitted if clearly declared to all other members. The CB Scheme utilizes CB Test Certificates to attest that product samples have successfully passed the appropriate tests and are in compliance with the requirements of the relevant IEC Standard and with the declared national differences of various member countries.
The main objective of the Scheme, is to facilitate trade by promoting harmonization of the national standards with international Standards and cooperation among product certifiers worldwide in order to bring product manufacturers a step closer to the ideal concept of "one product, one test, one mark, where applicable'.

- LR, ABS, DNV, KR, BV, GL, RINA, NK
- GOST, TPC



Time chart

Susol · Metasol

Long time

x Ir \ tr	0.5	1	2	4	8	12	16	20
1.11	58806	117611	235223	470445	940890	1411335	1881780	2352225
1.15	36041	72082	144163	288326	576652	864978	1153305	1441631
1.20	26827	53654	107308	214615	429231	643846	858461	1073077
1.25	21777	43553	87106	174212	348424	522636	696848	871060
1.30	18408	36817	73634	147268	294535	441803	589071	736338
1.35	15947	31895	63789	127579	255157	382736	510314	637893
1.40	14049	28098	56197	112393	224787	337180	449573	561967
1.45	12532	25063	50126	100252	200504	300756	401009	501261
1.50	11286	22573	45145	90290	180580	270870	361160	451450
1.55	10244	20488	40977	81954	163907	245861	327814	409768
1.60	9359	18717	37434	74869	149737	224606	299474	374343
1.65	8596	17193	34386	68771	137542	206313	275084	343855
1.70	7934	15867	31734	63468	126936	190404	253873	317341
1.75	7352	14704	29408	58815	117631	176446	235261	294077
1.80	6838	13675	27351	54702	109404	164106	218808	273509
1.85	6380	12760	25521	51041	102082	153123	204164	255205
1.90	5970	11941	23882	47764	95528	143292	191056	238820
1.95	5602	11204	22408	44815	89630	134446	179261	224076
2.00	5269	10537	21075	42150	84299	126449	168598	210748
2.05	4966	9932	19865	39730	79459	119189	158919	198649
2.10	4691	9381	18762	37525	75049	112574	150099	187623
2.15	4439	8877	17754	35508	71017	106525	142034	177542
2.20	4207	8415	16829	33659	67318	100976	134635	168294
2.25	3995	7989	15979	31957	63914	95871	127829	159786
2.30	3798	7597	15194	30387	60775	91162	121550	151937
2.35	3617	7234	14468	28936	57871	86807	115742	144678
2.40	3449	6897	13795	27590	55180	82769	110359	137949
2.45	3292	6585	13170	26339	52679	79018	105358	131697
2.50	3147	6294	12588	25176	50351	75527	100702	125878
2.55	3011	6022	12045	24090	48180	72269	96359	120449
2.60	2884	5769	11538	23075	46151	69226	92301	115377
2.65	2766	5531	11063	22126	44251	66377	88503	110628
2.70	2654	5309	10618	21235	42471	63706	84941	106177
2.75	2550	5100	10200	20399	40799	61198	81597	101997
2.80	2452	4903	9807	19613	39226	58840	78453	98066
2.85	2359	4718	9436	18873	37746	56619	75491	94364
2.90	2272	4544	9087	18175	36350	54524	72699	90874
2.95	2189	4379	8758	17516	35032	52547	70063	87579
3.00	2112	4223	8446	16893	33786	50679	67572	84464
3.05	2038	4076	8152	16303	32607	48910	65214	81517
3.10	1968	3936	7872	15745	31490	47235	62980	78725
3.15	1902	3804	7608	15215	30431	45646	60862	76077
3.20	1839	3678	7356	14713	29425	44138	58851	73563
3.25	1779	3559	7117	14235	28470	42705	56940	71175
3.30	1723	3445	6890	13781	27561	41342	55122	68903
3.35	1669	3337	6674	13348	26696	40044	53392	66741
3.40	1617	3234	6468	12936	25872	38808	51744	64680
3.45	1568	3136	6272	12543	25086	37629	50172	62715
3.50	1521	3042	6084	12168	24336	36504	48672	60841
3.55	1476	2952	5905	11810	23620	35430	47240	59050
3.60	1433	2867	5734	11468	22935	34403	45871	57338
3.65	1393	2785	5570	11140	22281	33421	44561	55702
3.70	1353	2707	5413	10827	21654	32481	43308	54135
3.75	1316	2632	5263	10527	21054	31581	42108	52634
3.80	1280	2560	5120	10239	20479	30718	40957	51196
3.85	1245	2491	4982	9963	19927	29890	39854	49817
3.90	1212	2425	4849	9699	19398	29096	38795	48494
3.95	1181	2361	4722	9445	18889	28334	37779	47223
4.00	1150	2300	4600	9201	18401	27602	36802	46003
4.05	1121	2241	4483	8966	17932	26898	35864	44830
4.10	1093	2185	4370	8740	17481	26221	34961	43701
4.15	1065	2131	4262	8523	17046	25569	34092	42615
4.20	1039	2079	4157	8314	16628	24942	33256	41570
4.25	1014	2028	4056	8113	16225	24338	32451	40563
4.30	990	1980	3959	7919	15837	23756	31674	39593
4.35	966	1933	3866	7731	15463	23194	30926	38657
4.40	944	1888	3776	7551	15102	22653	30204	37755
4.45	922	1844	3688	7377	14754	22131	29507	36884
4.50	901	1802	3604	7209	14417	21626	28835	36043
4.55	881	1762	3523	7046	14093	21139	28185	35231
4.60	861	1722	3445	6889	13779	20668	27557	34447
4.65	842	1684	3369	6738	13475	20213	26951	33688
4.70	824	1648	3295	6591	13182	19773	26364	32955
4.75	806	1612	3225	6449	12898	19347	25796	32245
4.80	789	1578	3156	6312	12624	18935	25247	31559
4.85	772	1545	3089	6179	12358	18536	24715	30894
4.90	756	1513	3025	6050	12100	18150	24200	30250
4.95	741	1481	2963	5925	11851	17776	23701	29627
5.00	726	1451	2902	5804	11609	17413	23218	29022
5.05	711	1422	2844	5687	11374	17062	22749	28436
5.10	697	1393	2787	5574	11147	16721	22294	27868
5.15	683	1366	2732	5463	10927	16390	21853	27317
5.20	670	1339	2678	5356	10713	16069	21425	26782
5.25	657	1313	2626	5252	10505	15757	21010	26262
5.30	644	1288	2576	5152	10303	15455	20607	25758
5.35	632	1263	2527	5054	10107	15161	20215	25268
5.40	620	1240	2479	4959	9917	14876	19834	24793
5.45	608	1217	2433	4866	9732	14598	19464	24330
5.50	597	1194	2388	4776	9552	14329	19105	23881
5.55	586	1172	2344	4689	9378	14066	18755	23444
5.60	575	1151	2302	4604	9207	13811	18415	23019
5.65	565	1130	2261	4521	9042	13563	18084	22605
5.70	555	1110	2220	4441	8881	13322	17762	22203
5.75	545	1091	2181	4362	8724	13087	17449	21811
5.80	536	1071	2143	4286	8572	12858	17144	21430
5.85	526	1053	2106	4212	8423	12635	16847	21058
5.90	517	1035	2070	4139	8279	12418	16557	20697
5.95	509	1017	2034	4069	8138	12206	16275	20344
6.00	500	1000	2000	4000	8000	12000	16000	20001
6.05	492	983	1967	3933	7866	11799	15733	19666
6.10	483	967	1934	3868	7736	11604	15471	19339
6.15	476	951	1902	3804	7608	11413	15217	19021
6.20	468	936	1871	3742	7484	11226	14968	18710
6.25	460	920	1841	3682	7363	11045	14726	18408
6.30	453	906	1811	3622	7245	10867	14490	18112
6.35	446	891	1782	3565	7129	10694	14259	17823
6.40	439	877	1754	3508	7017	10525	14034	17542
6.45	432	863	1727	3453	6907	10360	13814	17267
6.50	425	850	1700	3400	6799	10199	13599	16998
6.55	418	837	1674	3347	6694	10042	13389	16736
6.60	412	824	1648	3296	6592	9888	13184	16480
6.65	406	811	1623	3246	6492	9738	12984	16230
6.70	400	799	1598	3197	6394	9591	12788	15985
6.75	394	787	1575	3149	6298	9447	12597	15746

x Ir \ tr	0.5	1	2	4	8	12	16	20
6.80	388	776	1551	3102	6205	9307	12410	15512
6.85	382	764	1528	3057	6113	9170	12227	15283
6.90	376	753	1506	3012	6024	9036	12048	15060
6.95	371	742	1484	2968	5936	8905	11873	14841
7.00	366	731	1463	2925	5851	8776	11702	14627
7.05	360	721	1442	2884	5767	8651	11534	14418
7.10	355	711	1421	2843	5685	8528	11371	14213
7.15	350	701	1401	2803	5605	8408	11210	14013
7.20	345	691	1382	2763	5527	8290	11053	13816
7.25	341	681	1362	2725	5450	8175	10899	13624
7.30	336	672	1344	2687	5374	8062	10749	13436
7.35	331	663	1325	2650	5301	7951	10601	13252
7.40	327	654	1307	2614	5229	7843	10457	13071
7.45	322	645	1289	2579	5158	7737	10316	12895
7.50	318	636	1272	2544	5089	7633	10177	12721
7.55	314	628	1255	2510	5021	7531	10041	12552
7.60	310	619	1239	2477	4954	7431	9908	12385
7.65	306	611	1222	2444	4889	7333	9778	12222
7.70	302	603	1206	2412	4825	7237	9650	12062
7.75	298	595	1191	2381	4762	7143	9524	11906
7.80	294	588	1175	2350	4701	7051	9401	11752
7.85	290	580	1160	2320	4640	6961	9281	11601
7.90	286	573	1145	2291	4581	6872	9163	11453
7.95	283	565	1131	2262	4523	6785	9047	11308
8.00	279	558	1117	2233	4466	6700	8933	11166
8.05	276	551	1103	2205	4411	6616	8821	11026
8.10	272	544	1089	2178	4356	6534	8712	10889
8.15	269	538	1076	2151	4302	6453	8604	10755
8.20	266	531	1062	2125	4249	6374	8498	10623
8.25	262	525	1049	2099	4197	6296	8395	10494
8.30	259	518	1037	2073	4147	6220	8293	10366
8.35	256	512	1024	2048	4097	6145	8193	10242
8.40	253	506	1012	2024	4048	6071	8095	10119
8.45	250	500	1000	2000	3999	5999	7999	9998
8.50	247	494	988	1976	3952	5928	7904	9880
8.55	244	488	976	1953	3906	5858	7811	9764
8.60	241	482	965	1930	3860	5790	7720	9650
8.65	238	477	954	1908	3815	5723	7630	9538
8.70	236	471	943	1886	3771	5657	7542	9428
8.75	233	466	932	1864	3728	5592	7455	9319
8.80	230	461	921	1843	3685	5528	7370	9213
8.85	228	455	911	1822	3643	5465	7287	9108
8.90	225	450	901	1801	3602	5403	7204	9005
8.95	223	445	890	1781	3562	5343	7123	8904
9.00	220	440	880	1761	3522	5283	7044	8805
9.05	218	435	871	1741	3483	5224	6966	8707
9.10	215	431	861	1722	3444	5167	6889	8611
9.15	213	426	852	1703	3407	5110	6813	8516
9.20	211	421	842	1685	3369	5054	6739	8423
9.25	208	417	833	1666	3333	4999	6666	8332
9.30	206	412	824	1648	3297	4945	6594	8242
9.35	204	408	815	1631	3261	4892	6523	8153
9.40	202	403	807	1613	3227	4840	6453	8066
9.45	200	399	798	1596	3192	4788	6384	7981
9.50	197	395	790	1579	3159	4738	6317	7896
9.55	195	391	781	1563	3125	4688	6251	7813
9.60	193	387	773	1546	3093	4639	6185	7732

x Ir \ tr	0.5	1	2	4	8	12	16	20
9.65	191	383	765	1530	3060	4591	6121	7651
9.70	189	379	757	1514	3029	4543	6058	7572
9.75	187	375	749	1499	2998	4496	5995	7494
9.80	185	371	742	1483	2967	4450	5934	7417
9.85	184	367	734	1468	2937	4405	5873	7342
9.90	182	363	727	1453	2907	4360	5814	7267
9.95	180	360	719	1439	2878	4316	5755	7194
10.00	178	356	712	1424	2849	4273	5697	7122

Short time

x Ir \ tsd	0.1	0.2	0.3	0.4
1.40	5102	10204	15306	20408
1.45	4756	9512	14269	19025
1.50	4444	8889	13333	17778
1.55	4162	8325	12487	16649
1.60	3906	7813	11719	15625
1.65	3673	7346	11019	14692
1.70	3460	6920	10381	13841
1.75	3265	6531	9796	13061
1.80	3086	6173	9259	12346
1.85	2922	5844	8766	11687
1.90	2770	5540	8310	11080
1.95	2630	5260	7890	10519
2.00	2500	5000	7500	10000
2.05	2380	4759	7139	9518
2.10	2268	4535	6803	9070
2.15	2163	4327	6490	8653
2.20	2066	4132	6198	8264
2.25	1975	3951	5926	7901
2.30	1890	3781	5671	7561
2.35	1811	3622	5432	7243
2.40	1736	3472	5208	6944
2.45	1666	3332	4998	6664
2.50	1600	3200	4800	6400
2.55	1538	3076	4614	6151
2.60	1479	2959	4438	5917
2.65	1424	2848	4272	5696
2.70	1372	2743	4115	5487
2.75	1322	2645	3967	5289
2.80	1276	2551	3827	5102
2.85	1231	2462	3693	4925
2.90	1189	2378	3567	4756
2.95	1149	2298	3447	4596
3.00	1111	2222	3333	4444
3.05	1075	2150	3225	4300
3.10	1041	2081	3122	4162
3.15	1008	2016	3023	4031
3.20	977	1953	2930	3906
3.25	947	1893	2840	3787
3.30	918	1837	2755	3673
3.35	891	1782	2673	3564

x Ir \ tsd	0.1	0.2	0.3	0.4
3.40	865	1730	2595	3460
3.45	840	1680	2520	3361
3.50	816	1633	2449	3265
3.55	793	1587	2380	3174
3.60	772	1543	2315	3086
3.65	751	1501	2252	3002
3.70	730	1461	2191	2922
3.75	711	1422	2133	2844
3.80	693	1385	2078	2770
3.85	675	1349	2024	2699
3.90	657	1315	1972	2630
3.95	641	1282	1923	2564
4.00	625	1250	1875	2500
4.05	610	1219	1829	2439
4.10	595	1190	1785	2380
4.15	581	1161	1742	2323
4.20	567	1134	1701	2268
4.25	554	1107	1661	2215
4.30	541	1082	1622	2163
4.35	528	1057	1585	2114
4.40	517	1033	1550	2066
4.45	505	1010	1515	2020
4.50	494	988	1481	1975
4.55	483	966	1449	1932
4.60	473	945	1418	1890
4.65	462	925	1387	1850
4.70	453	905	1358	1811
4.75	443	886	1330	1773
4.80	434	868	1302	1736
4.85	425	850	1275	1700
4.90	416	833	1249	1666
4.95	408	816	1224	1632
5.00	400	800	1200	1600
5.05	392	784	1176	1568
5.10	384	769	1153	1538
5.15	377	754	1131	1508
5.20	370	740	1109	1479
5.25	363	726	1088	1451
5.30	356	712	1068	1424
5.35	349	699	1048	1398

Time chart

Susol · Metasol

Short time

x Ir \ tsd	0.1	0.2	0.3	0.4
5.40	343	686	1029	1372
5.45	337	673	1010	1347
5.50	331	661	992	1322
5.55	325	649	974	1299
5.60	319	638	957	1276
5.65	313	627	940	1253
5.70	308	616	923	1231
5.75	302	605	907	1210
5.80	297	595	892	1189
5.85	292	584	877	1169
5.90	287	575	862	1149
5.95	282	565	847	1130
6.00	278	556	833	1111
6.05	273	546	820	1093
6.10	269	537	806	1075
6.15	264	529	793	1058
6.20	260	520	780	1041
6.25	256	512	768	1024
6.30	252	504	756	1008
6.35	248	496	744	992
6.40	244	488	732	977
6.45	240	481	721	961
6.50	237	473	710	947
6.55	233	466	699	932
6.60	230	459	689	918
6.65	226	452	678	905
6.70	223	446	668	891
6.75	219	439	658	878
6.80	216	433	649	865
6.85	213	426	639	852
6.90	210	420	630	840
6.95	207	414	621	828
7.00	204	408	612	816
7.05	201	402	604	805
7.10	198	397	595	793
7.15	196	391	587	782
7.20	193	386	579	772
7.25	190	380	571	761
7.30	188	375	563	751
7.35	185	370	555	740
7.40	183	365	548	730
7.45	180	360	541	721
7.50	178	356	533	711
7.55	175	351	526	702
7.60	173	346	519	693
7.65	171	342	513	683
7.70	169	337	506	675
7.75	166	333	499	666
7.80	164	329	493	657
7.85	162	325	487	649
7.90	160	320	481	641
7.95	158	316	475	633
8.00	156	312	469	625
8.05	154	309	463	617
8.10	152	305	457	610
8.15	151	301	452	602
8.20	149	297	446	595

x Ir \ tsd	0.1	0.2	0.3	0.4
8.25	147	294	441	588
8.30	145	290	435	581
8.35	143	287	430	574
8.40	142	283	425	567
8.45	140	280	420	560
8.50	138	277	415	554
8.55	137	274	410	547
8.60	135	270	406	541
8.65	134	267	401	535
8.70	132	264	396	528
8.75	131	261	392	522
8.80	129	258	387	517
8.85	128	255	383	511
8.90	126	252	379	505
8.95	125	250	375	499
9.00	123	247	370	494
9.05	122	244	366	488
9.10	121	242	362	483
9.15	119	239	358	478
9.20	118	236	354	473
9.25	117	234	351	467
9.30	116	231	347	462
9.35	114	229	343	458
9.40	113	226	340	453
9.45	112	224	336	448
9.50	111	222	332	443
9.55	110	219	329	439
9.60	109	217	326	434
9.65	107	215	322	430
9.70	106	213	319	425
9.75	105	210	316	421
9.80	104	208	312	416
9.85	103	206	309	412
9.90	102	204	306	408
9.95	101	202	303	404
10.00	100	200	300	400

Ground fault

x In \ tg	0.1	0.2	0.3	0.4
0.20	2500	5000	7500	10000
0.21	2268	4535	6803	9070
0.22	2066	4132	6198	8264
0.23	1890	3781	5671	7561
0.24	1736	3472	5208	6944
0.25	1600	3200	4800	6400
0.26	1479	2959	4438	5917
0.27	1372	2743	4115	5487
0.28	1276	2551	3827	5102
0.29	1189	2378	3567	4756
0.30	1111	2222	3333	4444
0.31	1041	2081	3122	4162
0.32	977	1953	2930	3906
0.33	918	1837	2755	3673
0.34	865	1730	2595	3460
0.35	816	1633	2449	3265
0.36	772	1543	2315	3086
0.37	730	1461	2191	2922
0.38	693	1385	2078	2770
0.39	657	1315	1972	2630
0.40	625	1250	1875	2500
0.41	595	1190	1785	2380
0.42	567	1134	1701	2268
0.43	541	1082	1622	2163
0.44	517	1033	1550	2066
0.45	494	988	1481	1975
0.46	473	945	1418	1890
0.47	453	905	1358	1811
0.48	434	868	1302	1736
0.49	416	833	1249	1666
0.50	400	800	1200	1600
0.51	384	769	1153	1538
0.52	370	740	1109	1479
0.53	356	712	1068	1424
0.54	343	686	1029	1372
0.55	331	661	992	1322
0.56	319	638	957	1276
0.57	308	616	923	1231
0.58	297	595	892	1189
0.59	287	575	862	1149
0.60	278	556	833	1111
0.61	269	537	806	1075
0.62	260	520	780	1041
0.63	252	504	756	1008
0.64	244	488	732	977
0.65	237	473	710	947
0.66	230	459	689	918
0.67	223	446	668	891
0.68	216	433	649	865
0.69	210	420	630	840
0.70	204	408	612	816
0.71	198	397	595	793
0.72	193	386	579	772
0.73	188	375	563	751
0.74	183	365	548	730
0.75	178	356	533	711
0.76	173	346	519	693

x In \ tg	0.1	0.2	0.3	0.4
0.77	169	337	506	675
0.78	164	329	493	657
0.79	160	320	481	641
0.80	156	313	469	625
0.81	152	305	457	610
0.82	149	297	446	595
0.83	145	290	435	581
0.84	142	283	425	567
0.85	138	277	415	554
0.86	135	270	406	541
0.87	132	264	396	528
0.88	129	258	387	517
0.89	126	252	379	505
0.90	123	247	370	494
0.91	121	242	362	483
0.92	118	236	354	473
0.93	116	231	347	462
0.94	113	226	340	453
0.95	111	222	332	443
0.96	109	217	326	434
0.97	106	213	319	425
0.98	104	208	312	416
0.99	102	204	306	408
1.00	100	200	300	400

Ordering sheet

For faster quote processing, please use the following request for ordering sheet. For each section, check the applicable box or enter value corresponding to your choice.

Receipt	LSIS co., Ltd	Order date		Distributor name	
Project		Contractor			
Delivery place		Delivery date		PNL Maker	

ACB main body	Type of ACB	☐ AH ☐ AN Note 1)	☐ AS	Quantity	
	Frame size	☐ D (630~2000AF) Note 1)	☐ E (2000~4000AF)	☐ F (4000~5000AF)	☐ G (4000~6300AF)
	Ratings	AF			
	Rated current (CT)	A			
	Trip relay	☐ NO ☐ YES			

Type		Frequency		Control voltage			Comm.		Optional function	
		60Hz	50Hz	No	AC/DC 100~250V	DC 15~60V	No	Yes	Earth leakage detection	External CT ground fault
N	Normal	☐ NGO	☐ NG5	●	-	-	●	-	-	-
A	Ammeter	☐ AGO	☐ AG5	●	-	-	●	-	-	-
		☐ AG1	☐ AG6	-	●	-	●	-	-	-
		☐ AG2	☐ AG7	-	-	●	●	-	-	-
		☐ AZ0	☐ AZ5	●	-	-	●	-	●	-
		☐ AZ1	☐ AZ6	-	●	-	●	-	●	-
		☐ AZ2	☐ AZ7	-	-	●	●	-	●	-
		☐ AE0	☐ AE5	●	-	-	●	-	-	●
		☐ AE1	☐ AE6	-	●	-	●	-	-	●
		☐ AE2	☐ AE7	-	-	●	●	-	-	●
		☐ AC1	☐ AC6	-	●	-	-	●	-	-
		☐ AC2	☐ AC7	-	-	●	-	●	-	-
		☐ AK1	☐ AK6	-	●	-	-	●	●	-
		☐ AK2	☐ AK7	-	-	●	-	●	●	-
		☐ AX1	☐ AX6	-	●	-	-	●	-	●
		☐ AX2	☐ AX7	-	-	●	-	●	-	●

Type		Frequency		Control voltage		Comm.	Optional function		
		60Hz	50Hz	AC/DC 100~250V	DC 15~60V		Earth leakage detection	External CT ground fault	Pre-Trip Alarm
P	Power meter	☐ PC1	☐ PC6	●	-	●	-	-	-
		☐ PC2	☐ PC7	-	●	●	-	-	-
		☐ PK1	☐ PK6	●	-	●	●	-	-
		☐ PK2	☐ PK7	-	●	●	●	-	-
		☐ PX1	☐ PX6	●	-	●	-	●	-
		☐ PX2	☐ PX7	-	●	●	-	●	-
		☐ PA1	☐ PA6	●	-	●	-	-	●
		☐ PA2	☐ PA7	-	●	●	-	-	●
S	Supreme meter	☐ SC1	☐ SC6	●	-	●	-	-	-
		☐ SC2	☐ SC7	-	●	●	-	-	-
		☐ SK1	☐ SK6	●	-	●	●	-	-
		☐ SK2	☐ SK7	-	●	●	●	-	-
		☐ SX1	☐ SX6	●	-	●	-	●	-
		☐ SX2	☐ SX7	-	●	●	-	●	-
		☐ SA1	☐ SA6	●	-	●	-	-	●
		☐ SA2	☐ SA7	-	●	●	-	-	●

Note) - Standard function: Ground fault detection
- Communication function is not available under no control voltage
- AN, AS type is not available for S Meter
- P(Power), S(Supreme) Meter is also available for generator protection
- P, S Meter needs the accessory(VDM) for voltage measurement

	No.of poles	☐ 3-pole		☐ 4-pole	☐ Standard type (R, S, T, N)		
					☐ Reverse phase type (N, R, S, T)		
	Installation type	☐ Draw-out type		☐ Fixed type			
	Closing type	☐ Manual closing					
		☐ Electrical closing					
		• Charge method: Charging completion contact(1b) is basically installed		☐ Standard type (OFF-Charge method)			
				☐ Rapid auto-reclosing type (ON-Charge method)			
		• Motor operating voltage	☐ AC/DC 100V~130V	☐ DC 125V	☐ DC 24V~30V	☐ AC 48V~60V	
			☐ AC/DC 200V~250V	☐ DC 380V~415V	☐ AC 440V~480V	☐ AC 48V	
	Closing voltage	☐ AC/DC 100V~130V	☐ DC 125V	☐ AC/DC 200V~250V	☐ DC 24V~30V	☐ DC 48V~60V	☐ AC 380V~480V ☐ AC 48V
	Trip voltage	☐ AC/DC 100V~130V	☐ DC 125V	☐ AC/DC 200V~250V	☐ DC 24V~30V	☐ DC 48V~60V	☐ AC 380V~480V ☐ AC 48V
ACB cradle	Cradle type	☐ No safety shutter (E class)		☐ Safety shutter attachment (F class)			
	Terminal connection	☐ Manual connection		☐ Automatic connection			
	Connections	☐ Horizontal	☐ Vertical	☐ Front connection			
		☐ Line: Horizontal, Load: Vertical	☐ Line: Vertical, Load: Horizontal	☐ Separate order/ User Installation			

ACB accessory	ACB Main body	Standard accessory	• Aux. contact(AX)	☐ Standard type (3a3b, Standard installation)	☐ Extended type (5a5b) Note 3)	☐ High capacity (5a5b) Note 3)	
			• Key Lock(K1, K3)		☐ Single key, K1 (ON–Lock)	☐ Double key, K3 (ON–Lock)	
			• Undervoltage trip device (UVT, Instantaneous)				
			☐ AC/DC 100V~130V	☐ AC/DC 200V~250V	☐ DC 125V	☐ DC 24V~30V	☐ DC 48V~60V ☐ AC/DC 380V~480V ☐ AC 48V
			• Mechanical operation contact (MOC), Door Interlock (DI)		☐ Non-attachment type	☐ Attachment type	
			• Mechanical interlock (MI)		☐ Non-attachment type	☐ Attachment type	
			• Counter(C) Note 2)		☐ Non-attachment type	☐ Attachment type	
			• Miss insertion preventive device (MIP)		☐ Non-attachment type	☐ Attachment type	
			• Double shunt coil(SHT2)		☐ Non-attachment type	☐ Attachment type	
			• Ready-to-close switch(RCS)		☐ Non-attachment type	☐ Attachment type	
			• Trip alarm switch, Manual reset button(AL, MRB)		☐ Non-attachment type	☐ Attachment type	
			☐ Key interlock (K2, ON–Lock)		☐ ON/OFF Button Lock	☐ Temperature Alarm	
	ACB Cradle	Standard accessory	☐ Safety shutter lock(STL)				
			☐ Zero arc space(ZAS) Note 2)				
	Separate purchase	Main body mounting	☐ Interphase Barrier(IB)				
			☐ Slow closing lever(SL)				
		Cradle mounting	• Cell switch(CL)	☐ 4c	☐ 8c		
			☐ Door interlock(DI)				
			• Mechanical operation contact (MOC)		☐ Standard type (10a10b)	☐ High capacity(10a10b)	
			• Mechanical Interlock (MI)		☐ Wire type (2 terminals)	☐ Wire type (3 terminals)	
			• Shortening b-contact (SBC, 4b Max)	☐ 1b	☐ 2b	☐ 3b	☐ 4b
			• Miss insertion preventive device (MIP)		☐ Non-attachment type	☐ Attachment type	
			☐ Cradle mounting block(CMB)	☐ Safety control cover(SC)			
			☐ Racking interlock(RI)	☐ Interphase Barrier(IB) Note 2)			
		External mounting	• UVT time delay controller(UDC)				
			☐ AC/DC 100V~130V	☐ AC/DC 200V~250V	☐ DC 125V	☐ DC 48V~60V	☐ AC 380V~480V ☐ AC 48V
			☐ Door frame (DF)	☐ Condenser trip device (CTD)	☐ OCR tester		
			☐ Dust cover(DC)	☐ Profibus-DP Comm.(PC)	☐ Temperature alarm(TM)	☐ Remote I/O(RCO)	

Note) 1. In case of D type of Metasol (AN), frame size is in the range of 630~1600AF
2. The standard accessory for Susol (AH).
3. Aux. contact with extended/high capacity type adopts the rapid auto-reclosing method and available up to 6a6b.

FUTURING SMART ENERGY

We open up a brighter future through
efficient and convenient energy solutions.



Safety Instructions

- For your safety, please read user's manual thoroughly before operating.
- Contact the nearest authorized service facility for examination, repair, or adjustment.
- Please contact qualified service technician when you need maintenance.
  Do not disassemble or repair by yourself!
- Any maintenance and inspection shall be performed by the personnel having expertise concerned.



- According to The WEEE Directive, please do not discard the device with your household waste.

LS IS

www.lsis.com

■ Head Quarter

127 LS-ro (Hogye-dong) Dongan-gu, Anyang-si,
Gyeonggi-Do, 14119, Korea
Tel. 82-2-2034-4848, 4671, 4429 Fax: 82-2-2034-4555

■ Overseas Subsidiaries

- **LSIS(Dalian) Co., Ltd.** (Dalian, China)
  Tel: 86-411-8730-7510 Fax: 86-411-8730-7560 E-Mail: dskim@lsis.com
- **LSIS(Wuxi) Co., Ltd.** (Wuxi, China)
  Tel: 86-510-8534-6666-8005 Fax: 86-510-8534-4078 E-Mail: sojin@lsis.com
- **LS VINA Industrial Systems Co., Ltd** (Hanoi, Vietnam)
  Tel: 84-4-6275-8055 Fax: 84-4-3882-0220 E-Mail: hjchoid@lsis.com
- **LSIS Middle East FZE** (Dubai, U.A.E.)
  Tel: 971-4-886-5360 Fax: 971-4-886-5361 E-Mail: shunlee@lsis.com
- **LSIS Europe B.V.** (Amsterdam, Netherlands)
  Tel: 31-20-654-1420 Fax: 31-20-654-1429 E-Mail: europartner@lsis.com
- **LSIS Japan Co., Ltd.** (Tokyo, Japan)
  Tel: 81-3-6268-8241 Fax: 81-3-6268-8240 E-Mail: bmin@lsis.com
- **LSIS USA Inc.** (Chicago, U.S.A)
  Tel: 1-800-891-2941 Fax: 1-847-383-6543 E-Mail: sales.us@lsis.com

Technical Question or After-sales Service
Customer Center-Quick Responsive Service, Excellent technical support | **82-1644-5481**

■ Overseas Branches

- **LSIS Shanghai Office** (China)
  Tel: 86-21-5237-9977 Fax: 86-21-5237-7189
- **LSIS Beijing Office** (China)
  Tel: 86-10-5761-3127 Fax: 86-10-5761-3128 E-Mail: htroh@lsis.com
- **LSIS Guangzhou Offce** (China)
  Tel: 86-20-8326-6784 Fax: 80-20-8326-6287 E-Mail: sojhtroh@lsis.com
- **LSIS Qingdao Office** (China)
  Tel: 86-532-8501-6058 Fax: 86-532-8501-6057 E-Mail: htroh@lsis.com
- **LSIS Chengdu Office** (China)
  Tel: 86-28-8670-3200 Fax: 86-28-8670-3203 E-Mail: yangcf@lsis.com
- **LSIS ShenYang Office** (China)
  Tel: 86-24-2321-9050 Fax: 86-24-8386-7210 E-Mail: yangcf@lsis.com
- **LSIS Jinan Office** (China)
  Tel: 86-531-8699-7826 Fax: 86-531-8697-7628 E-Mail: yangcf@lsis.com
- **LSIS Co., Ltd. Tokyo Office** (Japan)
  Tel: 81-3-6268-8241 Fax: 81-3-6268-8240 E-Mail: jschuna@lsis.com
- **LSIS Co., Ltd. Rep. Office** (Vietnam)
  Tel: 84-8-3823-7890 E-Mail: sjbaik@lsis.com
- **LSIS Moscow Office** (Russia)
  Tel: 7-499-682-6130 E-Mail: info@lsis-ru.com
- **LSIS Jakarta Office** (Indonesia)
  Tel: 62-21-293-7614 E-Mail: dioh@lsis.com
- **LSIS Bangkok Office** (Thailand)
  Tel: 66-2-053-9133 E-Mail: sjleet@lsis.com

2018. 12

Specifications in this catalog are subject to change without notice due to continuous product development and improvement.

©2007. 8 LSIS Co.,Ltd. All rights reserved. / English (27) 2018. 12 Staffcom