LIEBHERR

Mobile crane with telescopic boom

LTM 1130-5.1

LTM 1130-5-1-005

Operating instructions

BAL No.: 20500-04-02

Pages: 1701

Serial No.	
Date	

epcatalogs.com

ORIGINAL OPERATING MANUAL

The operating manual is part of the crane!

It must always be available within reach!

The traffic regulations and those for crane operation must be observed!

Liebherr-Werk Ehingen GmbH
Postfach 1361
D-89582 Ehingen / Donau
+49 (0) 7391 502–0
+49 (0) 7391 502–3399
info.lwe@liebherr.com
www.liebherr.com

Preface

General

This crane was built according to the state of technology and recognized safety technical regulations. Despite that, dangers to body and life for the user and / or third persons or damage to the crane and / or other material assets can occur.

This crane may only be used:
- in impeccable technical condition.
- for destined use.
- by trained personnel, which acts in a safety and danger conscious way.
- when no safety relevant problems are present.
- when no modifications were made on the crane.

Any problems, which could affect safety must be fixed immediately.

Modifications on the crane may only be made with written approval by Liebherr-Werk Ehingen GmbH.

Data recording device

This crane is equipped with a data recording device. Among others, the following data is recorded:
- Date and time of day
- Entered configuration of the crane
- Actual load
- Percentage of utilization of the crane
- Working radius
- Main boom angle, luffing jib angle
- Total telescopic boom length, length of each telescopic section
- Every actuation of safety devices

The recorded data can be read with a respective software.

Safety and warning notes

Safety and warning notes are directed to all persons who work with the crane.

The terms **DANGER**, **WARNING**, **CAUTION** and **NOTICE** used in the crane documentation are intended to point out certain rules of conduct to all persons working with the crane.

Warning signs	Signal word	Explanation
	**DANGER**	Designates a dangerous situation which will lead to death or serious injury if it is not prevented [1)]
	**WARNING**	Designates a dangerous situation, which can lead to death or serious injury if it is not prevented. [1)]
	**CAUTION**	Designates a dangerous situation, which can lead to slight or medium-grade injuries if it is not prevented. [1)]
	NOTICE	Designates a dangerous situation, which can lead to property damage if it is not prevented.

[1)] This could also result in property damage.

epcatalogs.com

LWE/LTM 1130-5-1-005/20500-04-02/en

copyright by LIEBHERR

Additional notes

The term **Note** is used in the crane documentation to make all persons working with the crane aware of useful information and tips.

Sign	Signal word	Explanation
	**Note**	Designates useful information and tips.

Crane documentation

The crane documentation is comprised of:
- all supplied documents on paper and in digital form.
- all supplied programs and applications.
- all subsequently supplied information, updates and addenda for the crane documentation.

The crane documentation:
- makes it possible for you to operate the crane safely.
- supports you to utilize the permissible application possibilities of the crane.
- provides you with information about the functionality of important components and systems.



Note
Terminology in the crane documentation.
Certain expressions are used in the crane documentation.
▶ In order to avoid misunderstandings, the same expressions should always be used.

Translations from the German version of the crane documentation: The crane documentation has been translated to the best of one's knowledge. Liebherr-Werk Ehingen GmbH assumes no liability for translation errors. The German version of the crane documentation is solely applicable for factual accuracy. If you find any errors or if any misunderstandings arise when reading the crane documentation, please contact Liebherr-Werk Ehingen GmbH immediately.



WARNING
Danger of accident due to incorrect operation of the crane!
Incorrect operation of the crane can lead to accidents!
Personnel can be killed or seriously injured!
This could result in property damage!
▶ Only authorized and trained expert personnel are permitted to work on the crane.
▶ The crane documentation is part of the crane and must be accessible on the crane.
▶ The crane documentation and on-site regulations and specifications (such as accident prevention regulations) must be observed.

Using the crane documentation:
- **makes it easier** to become familiar with the crane.
- **avoids** problems due to improper operation.

Observing the crane documentation:
- **increases** reliability in use.
- **extends** the service life of the crane.
- **minimizes** repair costs and downtime.

Place the crane documentation accessible in the driver's cab or in the crane cab.

epcatalogs.com

copyright by
LIEBHERR

WARNING
Outdated version of crane documentation!
If subsequently supplied information, updates and addenda to the crane documentation are not observed and added, there is a danger of accidents!
Personnel can be killed or seriously injured!
This could result in property damage!

- ▶ Observe and add all subsequently supplied information, updates and addenda for the crane documentation.
- ▶ Make sure that all affected persons always know and understand the latest version of the crane documentation.

WARNING
Crane documentation is not understood!
If parts of the crane documentation are not understood and the tasks are carried out on or with the crane, then there is a danger of accidents!
Personnel can be killed or seriously injured!
This could result in property damage!

- ▶ Clear up open questions regarding the crane documentation with Liebherr Service before carrying out the respective task.

This documentation may not be reproduced or duplicated, distributed or used for purposes of competition, neither in part nor in excerpts. All rights are expressly reserved in accordance with copyright laws.

All accident prevention guidelines, operating instructions, load charts etc. are based on destined use of the crane.

epcatalogs.com

LWE/LTM 1130-5-1-005/20500-04-02/en

copyright by
LIEBHERR

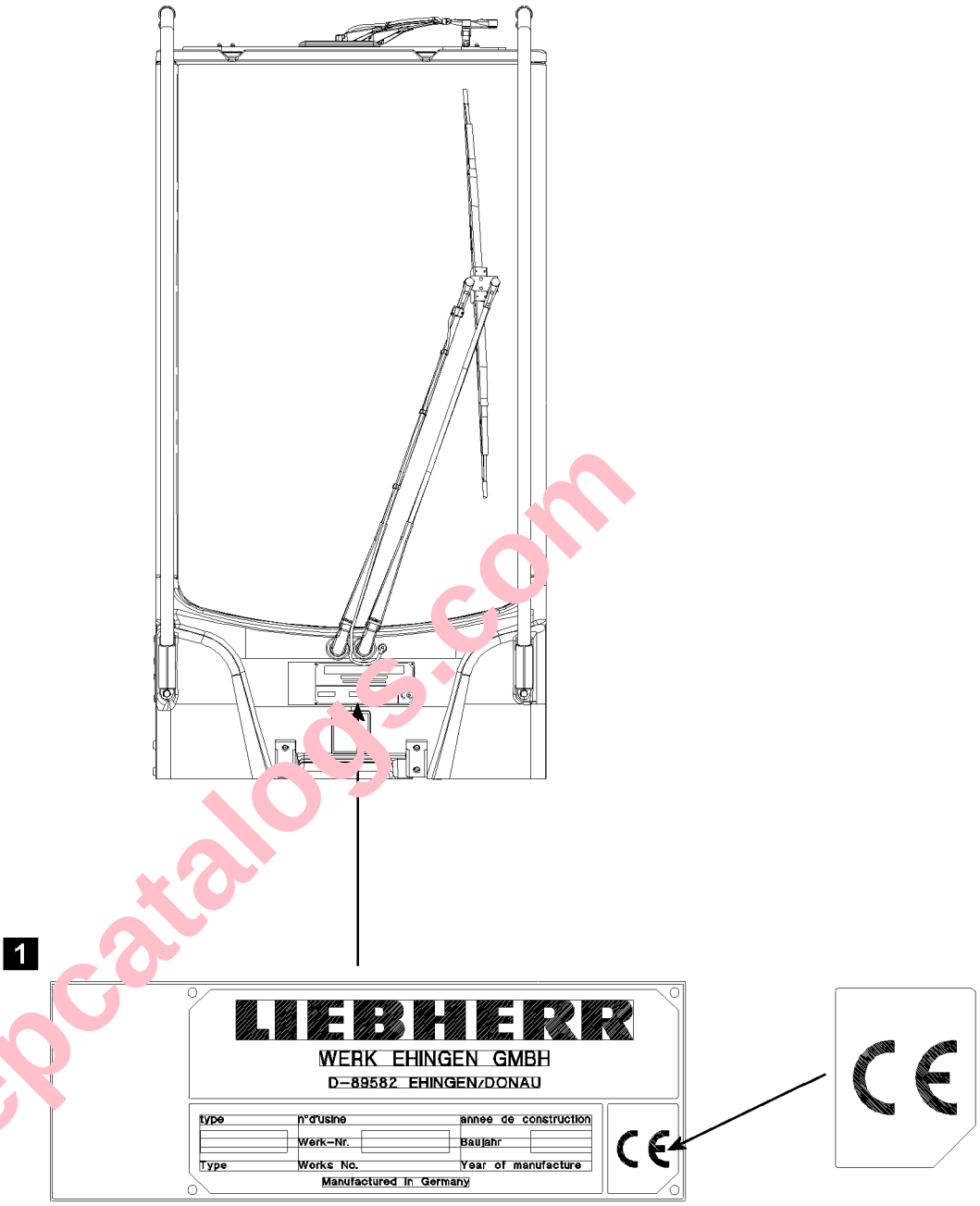

Fig.110001

epcatalogs.com

copyright by
LIEBHERR

Buy now

Liebherr LTM1130-5.1 Mobile crane with telescopic boom Operations Manual PDF

With Instant Download