Lenovo

ThinkSystem SD530 V3
User Guide



Machine Type: 7DD3, 7DDA

Note

Before using this information and the product it supports, be sure to read and understand the safety information and the safety instructions, which are available at:
https://pubs.lenovo.com/safety_documentation/

In addition, be sure that you are familiar with the terms and conditions of the Lenovo warranty for your server, which can be found at:
http://datacentersupport.lenovo.com/warrantylookup

Seventh Edition (June 2025)

© Copyright Lenovo 2025.

LIMITED AND RESTRICTED RIGHTS NOTICE: If data or software is delivered pursuant to a General Services Administration (GSA) contract, use, reproduction, or disclosure is subject to restrictions set forth in Contract No. GS-35F-05925.

Contents

Contents i

Safety iii

Safety inspection checklist iv

Chapter 1. Introduction 1

Features. 1

Tech Tips 3

Security advisories 3

Specifications 4

Chassis specifications 4

Node technical specifications 5

Node mechanical specifications 9

Environmental specifications 9

Management options. 15

Chapter 2. Hardware components . . 19

Front view 19

Chassis front view 19

Node front view 19

Rear view 21

Chassis rear view 21

Node rear view 22

Top view 24

Chassis midplane 24

System-board layout 26

System-board connectors 26

System-board switches 27

System LEDs and diagnostics display 28

Chapter 3. Parts list 29

Power cords 31

Chapter 4. Unboxing and setup 33

System package contents 33

Identify the system and access the Lenovo XClarity Controller 33

System setup checklist 35

Chapter 5. Hardware replacement procedures 39

Installation Guidelines 39

Safety inspection checklist. 40

System reliability guidelines 41

Handling static-sensitive devices 41

Memory module installation rules and order 42

DRAM DIMMs installation order 44

Power on and power off the node 46

Power on the node 46

Power off the node 46

Chassis replacement 47

Remove the chassis from the rack 47

Install the chassis to the rack 50

Replace components in the chassis 54

EIA bracket replacement 54

Hot-swap power supply replacement 56

PSU cage and chassis midplane replacement 62

Node component replacement 70

Node replacement 70

CMOS battery (CR2032) replacement 78

Drive cage assembly replacement 82

Fan replacement 88

GPU air duct replacement 90

Hot-swap drive replacement 93

M.2 drive replacement 99

Memory module replacement 104

MicroSD card replacement 109

OCP module replacement 111

PCIe riser assembly and adapter replacement 114

Power bus bar replacement 122

Power distribution board replacement 126

Processor and heat sink replacement (trained technician only) 130

Rear I/O module replacement 147

System board assembly replacement (trained technician only) 150

Top cover replacement 169

Complete the parts replacement 172

Chapter 6. Internal cable routing . . . 175

Identifying connectors 176

System-board connectors for cable routing 176

Drive backplane connectors 176

PCIe riser connectors. 177

Power distribution board connectors. 177

Rear I/O module connector 177

E3.S drive backplane cable routing 178

Fan cable routing 179

PCIe riser cable routing 180

Power distribution board cable routing 182

Rear I/O and OCP module cable routing 183

© Copyright Lenovo 2025

Chapter 7. System configuration . . .187
Set the network connection for the Lenovo XClarity Controller 187
Set USB port for Lenovo XClarity Controller connection. 188
Update the firmware 189
Configure the firmware 193
Memory module configuration 194
Enable Software Guard Extensions (SGX). 194
RAID configuration 194
Deploy the operating system. 195
Back up the server configuration 196
Enable Intel® On Demand 197
Enable Intel® On Demand Troubleshooting . . 206

Chapter 8. Problem determination 207
Event logs 207
Troubleshooting by system LEDs and diagnostics display 209
Drive LEDs 209
Front operator panel LEDs 209
Power supply LED 210
Firmware and RoT security module LEDs . . . 211
System-board LEDs 212
XCC system management port LEDs. 213
External Diagnostics Handset 213
General problem determination procedures 219
Resolving suspected power problems 220
Resolving suspected Ethernet controller problems 220
Troubleshooting by symptom 221
Intermittent problems. 221
Keyboard, mouse, or USB-device problems 222
Memory problems 223
Monitor and video problems 225
Network problems 226
Observable problems. 226
Optional-device problems 229
Power on and power off problems. 230
Power problems. 232
Processor problems 232
Serial-device problems 232
Software problems. 233
Storage drive problems 233

Appendix A. Hardware disassembling for recycle 235
Disassemble the node for recycle 235
Disassemble the chassis for recycle 236

Appendix B. Getting help and technical assistance 237
Before you call 237
Collecting service data 238
Contacting Support 239

Appendix C. Documents and supports 241
Documents download 241
Support websites 241

Appendix D. Notices. 243
Trademarks 244
Important notes. 244
Electronic emission notices 244
Taiwan Region BSMI RoHS declaration 245
Taiwan import and export contact information . . . 245

Safety

Before installing this product, read the Safety Information.

قبل تركيب هذا المنتج، يجب قراءة الملاحظات الآمنية

Antes de instalar este produto, leia as Informações de Segurança.

在安装本产品之前，请仔细阅读 Safety Information （安全信息）。

安裝本產品之前，請先閱讀「安全資訊」。

Prije instalacije ovog produkta obavezno pročitajte Sigurnosne Upute.

Před instalací tohoto produktu si přečtěte příručku bezpečnostních instrukcí.

Læs sikkerhedsforskrifterne, før du installerer dette produkt.

Lees voordat u dit product installeert eerst de veiligheidsvoorschriften.

Ennen kuin asennat tämän tuotteen, lue turvaohjeet kohdasta Safety Information.

Avant d'installer ce produit, lisez les consignes de sécurité.

Vor der Installation dieses Produkts die Sicherheitshinweise lesen.

Πριν εγκαταστήσετε το προϊόν αυτό, διαβάστε τις πληροφορίες ασφάλειας (safety information).

לפני שתתקינו מוצר זה, קראו את הוראות הבטיחות.

A termék telepítése előtt olvassa el a Biztonsági előírásokat!

Prima di installare questo prodotto, leggere le Informazioni sulla Sicurezza.

製品の設置の前に、安全情報をお読みください。

본 제품을 설치하기 전에 안전 정보를 읽으십시오.

Пред да се инсталира овој продукт, прочитајте информацијата за безбедност.

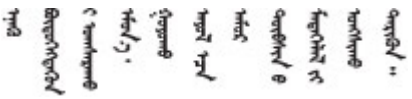

Les sikkerhetsinformasjonen (Safety Information) før du installerer dette produktet.

Przed zainstalowaniem tego produktu, należy zapoznać się z książką "Informacje dotyczące bezpieczeństwa" (Safety Information).

Antes de instalar este produto, leia as Informações sobre Segurança.

© Copyright Lenovo 2025

Перед установкой продукта прочтите инструкции по технике безопасности.

Pred inštaláciou tohto zariadenia si pečítaje Bezpečnostné predpisy.

Pred namestitvijo tega proizvoda preberite Varnostne informacije.

Antes de instalar este producto, lea la información de seguridad.

Läs säkerhetsinformationen innan du installerar den här produkten.

ཐོན་རྫས་འདི་བདེ་སྤྱོད་མ་བྱས་གོང་། ་སྐོར་གྱི་ཡིད་གཟབ་
བྱ་འདྲ་མིན་ཡོད་པའི་འོད་སྡེར་བལྟ་དགོས།

Bu ürünü kurmadan önce güvenlik bilgilerini okuyun.

مەزكۇر مەھسۇلاتنى ئورنىتىشتىن بۇرۇن بىخەتەرلىك ئۇچۇرلىرىنى ئوقۇپ چىقىڭ.

Youq mwngz yungh canjbinj neix gaxgonq, itdingh aeu doeg aen canjbinj soengq cungj vahgangj ancien siusik.

Safety inspection checklist

Use the information in this section to identify potentially unsafe conditions with your system. As each machine was designed and built, required safety items were installed to protect users and service technicians from injury.

Note: The product is not suitable for use at visual display workplaces according to §2 of the Workplace Regulations.

Attention: This is a Class A product. In a domestic environment, this product may cause radio interference in which case the user may be required to take adequate measures.

Note: The set-up of the server is made in the server room only.

CAUTION:
This equipment must be installed or serviced by trained personnel, as defined by the NEC, IEC 62368-1 & IEC 60950-1, the standard for Safety of Electronic Equipment within the Field of Audio/Video, Information Technology and Communication Technology. Lenovo assumes you are qualified in the servicing of equipment and trained in recognizing hazards energy levels in products. Access to the equipment is by the use of a tool, lock and key, or other means of security, and is controlled by the authority responsible for the location.

Important: Electrical grounding of the system is required for operator safety and correct system function. Proper grounding of the electrical outlet can be verified by a certified electrician.

Use the following checklist to verify that there are no potentially unsafe conditions:

1. Make sure that the power is off and the power cord is disconnected.
2. Check the power cord.
   - Make sure that the third-wire ground connector is in good condition. Use a meter to measure third-wire ground continuity for 0.1 ohm or less between the external ground pin and the frame ground.
   - Make sure that the power cord is the correct type.

To view the power cords that are available for the server:

a. Go to:

   http://dcsc.lenovo.com/#/

b. Click **Preconfigured Model** or **Configure to order**.

c. Enter the machine type and model for your server to display the configurator page.

d. Click **Power → Power Cables** to see all line cords.

- Make sure that the insulation is not frayed or worn.

3. Check for any obvious non-Lenovo alterations. Use good judgment as to the safety of any non-Lenovo alterations.
4. Check inside the server for any obvious unsafe conditions, such as metal filings, contamination, water or other liquid, or signs of fire or smoke damage.
5. Check for worn, frayed, or pinched cables.
6. Make sure that the power-supply cover tighteners (screws or rivets) have not been removed or tampered with.

© Copyright Lenovo 2025

Chapter 1. Introduction

Lenovo ThinkSystem SD530 V3 (Types 7DD3 and 7DDA) is a dense and economical two-socket node in a 1U rack form factor. Combining the efficiency and density of blades with the value and simplicity of rack-based servers, SD530 V3 delivers a cost-efficient scale-out platform that is thermally designed to deliver maximum performance in the smallest footprint. The system consists of a 2U D3 Chassis (Types 7DD0 and 7DD7) containing up to four SD530 V3 nodes, all with front access. Each node incorporates two fifth-generation Intel Xeon Scalable processors. SD530 V3 is well suited for workloads ranging from cloud, analytics to AI and high-performance computing application like Computer Aided Engineering (CAE) or Electronic Design Automation (EDA).



Features

Performance, ease of use, reliability, and expansion capabilities were key considerations in the design of your system. These design features make it possible for the user to customize the system hardware to meet the needs today and provide flexible expansion capabilities for the future.

Chassis features

- **Redundant optional power capabilities**

  The chassis supports up to three hot-swap CRPS power supplies, which provide redundancy.

  Important: Power supply units in the chassis must have the same wattage, vendor, and part number (or alternate part number).

- **Chassis management**

  The chassis midplane with PSoC (Programmable System on Chip) allows monitor and management of nodes and power supply units in the chassis. A **chassis caretaker node** is selected by the PSoC firmware for chassis management.

  For the management interface, see https://pubs.lenovo.com/lxcc-overview/. In XCC, certain management functions can only be performed by the caretaker node, whereas other functions can be performed by all nodes.

Function	Caretaker node[1]	Other nodes
– Supported: ✓ – Unsupported: X		
PSoC firmware update	✓	X

1. By default, the **caretaker node** is automatically selected by the PSoC firmware on the chassis midplane. To change the chassis caretaker preference, see https://pubs.lenovo.com/xcc2/NN1ia_c_d3_chassis.

© Copyright Lenovo 2025

Function	Caretaker node[2]	Other nodes
PSU firmware update[3]	✓	X
Virtual reseat/reset for all nodes in the chassis	✓	X
View PSU inventory and events	✓	X
View chassis VPD and PSoC firmware versions	✓	✓
View PSU present status	✓	✓
View information of chassis and all nodes	✓	✓
Virtual reseat / reset for the current node itself	✓	✓
View the change history of the caretaker node	✓	✓
View the history of node installation / removal	✓	✓
View or participate in the caretaker node selection	✓	✓

Node features

Your node implements the following features and technologies:

- **Features on Demand**

  If a Features on Demand feature is integrated in the system or in an optional device that is installed in the system, you can purchase an activation key to activate the feature. For information about Features on Demand, see:

  https://fod.lenovo.com/lkms

  Intel® On Demand is a feature that allows user to customize processor capabilities according to workload and tasks at hand. For more information, see “Enable Intel® On Demand” on page 197.

- **Lenovo XClarity Controller (XCC)**

  The Lenovo XClarity Controller is the common management controller for Lenovo ThinkSystem server hardware. The Lenovo XClarity Controller consolidates multiple management functions in a single chip on the server system board. Some of the features that are unique to the Lenovo XClarity Controller are enhanced performance, higher-resolution remote video, and expanded security options.

  The system supports Lenovo XClarity Controller 2 (XCC2). For additional information about Lenovo XClarity Controller 2 (XCC2), refer to https://pubs.lenovo.com/lxcc-overview/.

- **UEFI-compliant server firmware**

  Lenovo ThinkSystem firmware is Unified Extensible Firmware Interface (UEFI) compliant. UEFI replaces BIOS and defines a standard interface between the operating system, platform firmware, and external devices.

  Lenovo ThinkSystem servers are capable of booting UEFI-compliant operating systems, BIOS-based operating systems, and BIOS-based adapters as well as UEFI-compliant adapters.

2. By default, the **caretaker node** is automatically selected by the PSoC firmware on the chassis midplane. To change the chassis caretaker preference, see https://pubs.lenovo.com/xcc2/NN1ia_c_d3_chassis.
3. Only the caretaker node can perform PSU firmware update.

Note: The system does not support Disk Operating System (DOS).

- **Active Memory**

  The Active Memory feature improves the reliability of memory through memory mirroring. Memory mirroring mode replicates and stores data on two pairs of DIMMs within two channels simultaneously. If a failure occurs, the memory controller switches from the primary pair of memory DIMMs to the backup pair of DIMMs.

- **Large system-memory capacity**

  The system supports TruDDR5 DIMMs operating at up to 5600 MHz. For more information about the specific types and maximum amount of memory, see "Node technical specifications" on page 5.

- **Large data-storage capacity**

  The node supports up to two E3.S 1T drives.

- **Lightpath Diagnostics**

  Lightpath Diagnostics provides LEDs to help diagnose problems. For more information about the Lightpath Diagnostics, see "Troubleshooting by system LEDs and diagnostics display" on page 209.

- **Mobile access to Lenovo Service Information website**

  The node provides a QR code on the system service label, which is on the node top cover, that you can scan using a QR code reader and scanner with a mobile device to get quick access to the Lenovo Service Information website. The Lenovo Service Information website provides additional information for parts installation, replacement videos, and error codes for system support.

- **Active Energy Manager**

  Lenovo XClarity Energy Manager is a power and temperature management solution for data centers. You can monitor and manage the power consumption and temperature of Converged, NeXtScale, System x, and ThinkServer solutions, and improve energy efficiency using Lenovo XClarity Energy Manager.

- **ThinkSystem RAID support**

  The ThinkSystem RAID provides software RAID support for RAID level 0 and 1.

Tech Tips

Lenovo continually updates the support website with the latest tips and techniques that you can use to solve issues that your server might encounter. These Tech Tips (also called retain tips or service bulletins) provide procedures to work around issues or solve problems related to the operation of your server.

To find the Tech Tips available for your server:

1. Go to http://datacentersupport.lenovo.com and navigate to the support page for your server.
2. Click on **How To's** from the navigation pane.
3. Click **Article Type → Solution** from the drop-down menu.

   Follow the on-screen instructions to choose the category for the problem that you are having.

Security advisories

Lenovo is committed to developing products and services that adhere to the highest security standards in order to protect our customers and their data. When potential vulnerabilities are reported, it is the responsibility of the Lenovo Product Security Incident Response Team (PSIRT) to investigate and provide information to our customers so they may put mitigation plans in place as we work toward providing solutions.

The list of current advisories is available at the following site:

https://datacentersupport.lenovo.com/product_security/home

Specifications

Summary of the features and specifications of the chassis and node. Depending on the model, some features might not be available, or some specifications might not apply.

Refer to the below table for specifications categories and the content of each category.

Specification category	"Chassis specifications" on page 4	"Node technical specifications" on page 5	"Node mechanical specifications" on page 9	"Environmental specifications" on page 9
Content	• Technical specifications • Mechanical specifications	• "Processor" on page 6 • "Memory" on page 6 • "M.2 Drive" on page 7 • "Storage expansion" on page 7 • "Expansion slots" on page 7 • "Graphics processing units (GPU)" on page 7 • "Integrated functions" on page 8 • "Network" on page 8 • "RAID adapter" on page 8 • "System fan" on page 8 • "Minimal configuration for debugging" on page 9 • "Operating systems" on page 9	• Dimension • Weight	• "Acoustical noise emissions" on page 10 • "Ambient temperature management" on page 10 • "Environment" on page 13

Chassis specifications

Summary of the specifications of the chassis.

Technical specifications

Table 1. Chassis technical specifications

Specification	Description
Electrical input	The system supports up to three hot-swap power supplies: • CRPS 1300-watt Titanium, input power 200-240V • CRPS 1300-watt Platinum, input power 200-240V • CRPS 1600-watt Titanium, input power 200-240V • CRPS 2000-watt Titanium, input power 200-240V • CRPS 2700-watt Titanium, input power 200-240V • CRPS 2700-watt Platinum, input power 200-240V Supported power supply configurations: • 3 PSUs: 2+1 without over-subscription (optional redundancy) • 2 PSUs: 1+1 without over-subscription (optional redundancy) • 1 PSU: 1+0 only for 2700-watt CRPS PSU, without over-subscription **Note:** The actual power efficiency depends on system configuration. **Important:** Power supply units in the chassis must have the same wattage, vendor, and part number (or alternate part number).

Mechanical specifications

Important: For safety, make sure that there is no node or power supply unit installed in the chassis when removing or installing the chassis from or to the rack.

Table 2. Chassis mechanical specifications

Specification	Description
Dimension	2U rack-mounted chassis (2U2N or 2U4N) • Height: 87 mm (3.43 inches) • Depth: 898 mm (35.36 inches) • Width: 448 mm (17.64 inches) • Weight: – Empty chassis (with chassis midplane and PSU cage): 11.83 kg (26.08 lbs) – Maximum (with four 1U or two 2U nodes and three CRPS power supplies installed): approximately 42.37 kg (93.41 lbs)

Note: For the supported nodes for the chassis, see “Chassis front view” on page 19.

Node technical specifications

Summary of the technical specifications of the node. Depending on the model, some features might not be available, or some specifications might not apply.

Processor

Processor
Supports multi-core Intel Xeon processors, with integrated memory controller and Intel Mesh UPI (Ultra Path Interconnect) topology. • Up to two Gold or Platinum level processors with LGA 4677 sockets. • Scalable up to 64 cores per socket • Supports UPI v2.0 links at higher width (x96) and speed: up to 12.8, 14.4, 16 GT/s • Thermal Design Power (TDP): up to 350 watts For a list of supported processors, see: https://serverproven.lenovo.com.

Memory

Memory
See “Memory module installation rules and order” on page 42 for detailed information about memory configuration and setup. • Slots: 16 dual inline memory module (DIMM) connectors that support up to 16 TruDDR5 DIMMs (8 DIMMs per processor) • Each processor has 8 memory channels, with 1 DIMM per channel • Memory module types: – TruDDR5 5600 MHz RDIMM: 32 GB (2Rx8), 48 GB (2Rx8), 96 GB (2Rx4), and 128 GB (2Rx4) **Note:** ThinkSystem 128GB TruDDR5 5600MHz (2Rx4) RDIMM is only supported with 5th Gen Intel Xeon Scalable processors. – TruDDR5 5600 MHz 10x4 RDIMM: 32 GB (1Rx4), 64 GB (2Rx4) – TruDDR5 5600 MHz 3DS RDIMM: 128 GB (4Rx4) • Speed: Operating speed depends on processor model and UEFI settings. – 5600 MT/s for 1 DIMM per channel • Minimum memory: 32 GB • Maximum memory: 1 TB (8 x 128 GB) For a list of supported memory modules, see: https://serverproven.lenovo.com.

M.2 Drive

M.2 Drive

• Up to two M.2 drives on system board.
• The system supports M.2 drives with the following capacity:
  – SATA M.2 drive:
  – 240 GB
  – 480 GB
  – 960 GB
  – NVMe M.2 drive:
  – 480 GB
  – 800 GB
  – 960 GB
  – 1.92 TB
  – 3.84 TB
• The following form factors are supported:
  – 80 mm (2280)
  – 110 mm (22110)
For a list of supported M.2 drives, see: https://serverproven.lenovo.com.

Storage expansion

Storage expansion
• Up to two hot-swap E3.S drives For a list of supported drives, see: https://serverproven.lenovo.com.

Expansion slots

Expansion slots

• **PCIe riser**
  – One PCIe riser on rear of node:
  – PCI Express 5.0 x16, HH/HL (single width)
  – PCIe expansion slot can support up to 75 watt PCIe adapter.
• **OCP module**
  – One OCP module slot

Graphics processing unit (GPU)

Graphics processing unit (GPU)
• Up to one 75-watt low-profile GPU For a list of supported GPUs, see: https://serverproven.lenovo.com.

Integrated functions and I/O connectors

Integrated functions
• Lenovo XClarity Controller (XCC), which provides service processor control and monitoring functions, video controller, and remote keyboard, video, mouse, and remote drive capabilities. • One XCC system management port (10/100/1000 Mbps RJ-45) to connect to a systems-management network. This RJ-45 connector is dedicated to the Lenovo XClarity Controller functions. • Front connectors: – One serial port – One USB 3.2 Gen 1 connector – One VGA connector – One external diagnostics connector • Rear connectors: – A group of two or four Ethernet connectors on OCP Ethernet adapter – One Mini DisplayPort connector – One XCC system management port (10/100/1000 Mbps RJ-45) – One USB 3.2 Gen 1 connector – One USB 2.0 connector with Lenovo XClarity Controller (XCC) system management **Note:** The maximum video resolution is 1920 x 1200 at 60 Hz.

Network

Network
• Two or four connectors on the OCP 3.0 module

RAID adapter

RAID adapter
The ThinkSystem RAID provides software RAID support for M.2 drives: • Intel VROC standard: requires an activation key and supports RAID level 0 and 1 • Intel VROC Premium: requires an activation key and supports RAID level 0 and 1 • Intel VROC Boot (for 5th Gen processors): requires an activation key and supports RAID level 1 only • Onboard SATA ports with software RAID support (Intel VROC SATA RAID, supporting RAID level 0 and 1) The ThinkSystem RAID provides software RAID support for E3.S drives: • Intel VROC standard: requires an activation key and supports RAID level 0 and 1 For more information about the supported RAID/HBA adapters, see Lenovo ThinkSystem RAID Adapter and HBA Reference.

System fan

System fan
Four 4056 fans (40 x 40 x 56 mm)

Minimal configuration for debugging

Minimal configuration for debugging
• The following minimal configuration is required for the node to start: – System board – Firmware and RoT security module (installed on the system board) – One processor in socket 1 – One memory module in DIMM slot 4 – One power supply in PSU slot 1 – One boot drive, M.2 or E3.S drive, and RAID adapter if configured (If OS is needed by debugging) – Four system fans

Operating systems

Operating systems
Supported and certified operating systems: • Microsoft Windows Server • VMware ESXi • Red Hat Enterprise Linux • SUSE Linux Enterprise Server References: • Complete list of available operating systems: https://lenovopress.lenovo.com/osig. • OS deployment instructions, see “Deploy the operating system” on page 195.

Node mechanical specifications

Summary of the mechanical specifications of the ThinkSystem SD530 V3 node. Depending on the model, some features might not be available, or some specifications might not apply.

Dimension
ThinkSystem SD530 V3 node • Height: 40.55 mm (1.60 inches) • Width: 221.4 mm (8.72 inches) • Depth: 907 mm (35.71 inches) (including E3.S drives)

Weight
Maximum: • 7.6 kg (16.76 lbs)

Environmental specifications

Summary of the environmental specifications of server. Depending on the model, some features might not be available, or some specifications might not apply.

- “Acoustical noise emissions” on page 10
- “Ambient temperature management” on page 10

- “Environment” on page 13

Acoustical noise emissions

Acoustical noise emissions
The server has the following acoustic noise emissions declaration: • Sound power level (L_{WAd}) – Idling: 7.3 Bel (Typical), 7.4 Bel (Max.) – Operating 1: 7.3 Bel (Typical), 7.4 Bel (Max.) – Operating 2: 7.5 Bel (Typical), 8.3 Bel (Max.) • Sound pressure level (L_{pAm}): – Idling: 57.1 dBA (Typical), 57.8 dBA (Max.) – Operating 1: 57.1 dBA (Typical), 57.8 dBA (Max.) – Operating 2: 59.1 dBA (Typical), 66.4 dBA (Max.) **Notes:** • These sound levels were measured in controlled acoustical environments according to procedures specified by ISO7779 and are reported in accordance with ISO 9296. • Idle mode is the steady state in which the server is powered on but not operating any intended function. Operating mode 1 is 50% of CPU TDP. Operating Mode 2 is 100% of CPU TDP. • The declared acoustic sound levels are based on the below-specified configurations, which may change depending on configuration/conditions. (with four SD530 V3 nodes installed in the chassis) – **Typical:** four 185-watt processors, thirty-two 64 GB RDIMMs, four E3.S SSDs, four 1GB OCP modules, and two 2700-watt CRPS PSUs – **Maximum:** eight 205-watt processors, sixty-four 64 GB RDIMMs, eight E3.S SSDs, four 1GB OCP modules, four GPU adapters, and three 2700-watt CRPS PSUs • Government regulations (such as those prescribed by OSHA or European Community Directives) may govern noise level exposure in the workplace and may apply to you and your server installation. The actual sound pressure levels in your installation depend upon a variety of factors, including the number of racks in the installation; the size, materials, and configuration of the room; the noise levels from other equipment; the room ambient temperature, and employee's location in relation to the equipment. Further, compliance with such government regulations depends on a variety of additional factors, including the duration of employees' exposure and whether employees wear hearing protection. Lenovo recommends that you consult with qualified experts in this field to determine whether you are in compliance with the applicable regulations.

Ambient temperature management

Ambient temperature management
Adjust ambient temperature when specific components are installed.

Notes:

- To avoid throttling, make sure to adopt passive Direct Attach cables when network adapters with 100GbE or higher speed are installed.
- Two-processor configuration is supported up to 30°C.
- If PCIe adapter with up to 2 ports is installed, the configuration only supports OCP module with up to 4 ports.
- If PCIe adapter with up to 4 ports is installed, the configuration only supports OCP module with up to 2 ports.

When E3.S PM1743 15.36TB drive is installed, the ambient temperature must be limited to 30°C or lower.

- Keep the ambient temperature to **35°C** or lower with the following system configuration:

Table 3. **Configurations with one processor***, under 35°C*

Processor configuration	Conditionally supported components	Commonly supported components
– One processor with up to **350-watt TDP** – Performance heat sink	– One PCIe Ethernet adapter – No OCP module	– Up to eight 96 GB RDIMMs – Up to two E3.S 1T drives – Up to two M.2 drives
	– No PCIe adapter – One OCP module	
– One processor with up to **300-watt TDP** – Performance heat sink	– One PCIe adapter with 2 ports – One OCP module	– Up to eight 96 GB RDIMMs – Up to two E3.S 1T drives – Up to two M.2 drives
	– One PCIe Ethernet adapter – One OCP module with 2 ports	
	– One GPU adapter – One OCP module	
– One processor with up to **185-watt TDP** – Standard heat sink	– Up to eight 128 GB 3DS RDIMMs – One PCIe adapter with 2 ports – One OCP module	– Up to two E3.S 1T drives – Up to two M.2 drives
	– Up to eight 128 GB 3DS RDIMMs – One PCIe Ethernet adapter – One OCP module with 2 ports	
	– Up to eight 96 GB RDIMMs – One GPU adapter	

Table 3. Configurations with one processor*, under 35°C (continued)*

Processor configuration	Conditionally supported components	Commonly supported components
	– One OCP module	

- Keep the ambient temperature to **30°C** or lower with the following system configuration:

Table 4. **Configurations with one processor***, under 30°C*

Processor configuration	Conditionally supported components	Commonly supported components
– One processor with up to **350-watt TDP** – Performance heat sink	– One PCIe adapter with 2 ports – One OCP module	– Up to eight 96 GB RDIMMs – Up to two E3.S 1T drives – Up to two M.2 drives
	– One PCIe Ethernet adapter – One OCP module with 2 ports	
	– One GPU adapter – One OCP module	
– One processor with up to **300-watt TDP** – Performance heat sink	– One PCIe adapter with 2 ports – One OCP module	– Up to eight 128 GB 3DS RDIMMs – Up to two E3.S 1T drives – Up to two M.2 drives
	– One PCIe Ethernet adapter – One OCP module with 2 ports	

Table 5. **Configurations with two processors***, under 30°C*

Processor configuration	Conditionally supported components	Commonly supported components
– Two processors with up to **150-watt TDP** – Processor 1 with standard heat sink – Processor 2 with performance heat sink	– One GPU adapter – One OCP module	– Up to sixteen 64 GB RDIMMs – Up to two E3.S 1T drives – Up to two M.2 drives
	– One PCIe adapter with 2 ports – One OCP module	
	– One PCIe Ethernet adapter – One OCP module with 2 ports	

- Keep the ambient temperature to **25°C** or lower with the following system configuration:

Table 6. **Configurations with one processor***, under 25°C*

Processor configuration	Conditionally supported components	Commonly supported components
– One processor with up to **350-watt TDP** – Performance heat sink	– One PCIe adapter with 2 ports – One OCP module	– Up to eight 128 GB 3DS RDIMMs – Up to two E3.S 1T drives – Up to two M.2 drives
	– One PCIe Ethernet adapter	

Table 6. Configurations with one processor*, under 25°C (continued)*

Processor configuration	Conditionally supported components	Commonly supported components
	– One OCP module with 2 ports	

Table 7. **Configurations with two processors***, under 25°C*

Processor configuration	Conditionally supported components	Commonly supported components
– Two processors with up to **205-watt TDP** – Processor 1 with standard heat sink – Processor 2 with performance heat sink	– One PCIe adapter with 2 ports – One OCP module	– Up to sixteen 64 GB RDIMMs – Up to two E3.S 1T drives – Up to two M.2 drives
	– One PCIe Ethernet adapter – One OCP module with 2 ports	
	– One GPU adapter – One OCP module	

Environment

Environment
ThinkSystem SD530 V3 complies with ASHRAE Class A2 specifications. System performance may be impacted when operating temperature is outside AHSRAE A2 specification. Depending on the hardware configuration, SD530 V3 also complies with ASHRAE Class H1 specification. System performance may be impacted when operating temperature is outside ASHRAE H1 specification. • Air temperature: – Operating – ASHRAE Class A2: 10°C to 35°C (50°F to 95°F); the maximum ambient temperature decreases by 1°C for every 300 m (984 ft) increase in altitude above 900 m (2,953 ft). – ASHRAE Class H1: 5°C to 25°C (41°F to 77°F); the maximum ambient temperature decreases by 1°C for every 300 m (984 ft) increase in altitude above 900 m (2,953 ft). – Server off: 5°C to 45°C (41°F to 113°F) – Shipment/storage: -40°C to 60°C (-40°F to 140°F) • Maximum altitude: 3,050 m (10,000 ft) • Relative Humidity (non-condensing): – Operating – ASHRAE Class A2: 8% to 80%; maximum dew point: 21°C (70°F) – ASHRAE Class H1: 8% to 80%; maximum dew point: 17°C (62.6°F) – Shipment/storage: 8% to 90% • Particulate contamination **Attention:** Airborne particulates and reactive gases acting alone or in combination with other environmental factors such as humidity or temperature might pose a risk to the server. For information about the limits for particulates and gases, see “Particulate contamination” on page 14. **Note:** The server is designed for standard data center environment and recommended to be placed in industrial data center.

Particulate contamination

Attention: Airborne particulates (including metal flakes or particles) and reactive gases acting alone or in combination with other environmental factors such as humidity or temperature might pose a risk to the device that is described in this document.

Risks that are posed by the presence of excessive particulate levels or concentrations of harmful gases include damage that might cause the device to malfunction or cease functioning altogether. This specification sets forth limits for particulates and gases that are intended to avoid such damage. The limits must not be viewed or used as definitive limits, because numerous other factors, such as temperature or moisture content of the air, can influence the impact of particulates or environmental corrosives and gaseous contaminant transfer. In the absence of specific limits that are set forth in this document, you must implement practices that maintain particulate and gas levels that are consistent with the protection of human health and safety. If Lenovo determines that the levels of particulates or gases in your environment have caused damage to the device, Lenovo may condition provision of repair or replacement of devices or parts on implementation of appropriate remedial measures to mitigate such environmental contamination. Implementation of such remedial measures is a customer responsibility.

Table 8. Limits for particulates and gases

Contaminant	Limits
Reactive gases	Severity level G1 as per ANSI/ISA 71.04-1985[1]: • The copper reactivity level shall be less than 200 Angstroms per month (Å/month ≈ 0.0035 µg/cm^2-hour weight gain).[2] • The silver reactivity level shall be less than 200 Angstroms per month (Å/month ≈ 0.0035 µg/cm^2-hour weight gain).[3] • The reactive monitoring of gaseous corrosivity must be conducted approximately 5 cm (2 in.) in front of the rack on the air inlet side at one-quarter and three-quarter frame height off the floor or where the air velocity is much higher.
Airborne particulates	Data centers must meet the cleanliness level of ISO 14644-1 class 8. For data centers without airside economizer, the ISO 14644-1 class 8 cleanliness might be met by choosing one of the following filtration methods: • The room air might be continuously filtered with MERV 8 filters. • Air entering a data center might be filtered with MERV 11 or preferably MERV 13 filters. For data centers with airside economizers, the choice of filters to achieve ISO class 8 cleanliness depends on the specific conditions present at that data center. • The deliquescent relative humidity of the particulate contamination should be more than 60% RH.[4] • Data centers must be free of zinc whiskers.[5]

cu

[1] ANSI/ISA-71.04-1985. *Environmental conditions for process measurement and control systems: Airborne contaminants*. Instrument Society of America, Research Triangle Park, North Carolina, U.S.A.

[2] The derivation of the equivalence between the rate of copper corrosion growth in the thickness of the corrosion product in Å/month and the rate of weight gain assumes that Cu_2S and Cu_2O grow in equal proportions.

[3] The derivation of the equivalence between the rate of silver corrosion growth in the thickness of the corrosion product in Å/month and the rate of weight gain assumes that Ag_2S is the only corrosion product.

[4] The deliquescent relative humidity of particulate contamination is the relative humidity at which the dust absorbs enough water to become wet and promote ionic conduction.

[5] Surface debris is randomly collected from 10 areas of the data center on a 1.5 cm diameter disk of sticky electrically conductive tape on a metal stub. If examination of the sticky tape in a scanning electron microscope reveals no zinc whiskers, the data center is considered free of zinc whiskers.

Water quality requirement

Attention: The water required to initially fill the system side cooling loop must be reasonably clean, bacteria-free water (<100 CFU/ml) such as de-mineralized water, reverse osmosis water, de-ionized water, or distilled water. The water must be filtered with an in-line 50 micron filter (approximately 288 mesh). The water must be treated with anti-biological and anti-corrosion measures. Environment quality must be maintain over the lifetime of the system to receive warranty and support on affecting components. For more information please see Lenovo Neptune Direct Water-Cooling Standards.

Management options

The XClarity portfolio and other system management options described in this section are available to help you manage the servers more conveniently and efficiently.

Overview

Options	Description
Lenovo XClarity Controller	Baseboard management controller (BMC) Consolidates the service processor functionality, Super I/O, video controller, and remote presence capabilities into a single chip on the server system board (system board assembly). **Interface** • CLI application • Web GUI interface • Mobile application • Redfish API **Usage and downloads** https://pubs.lenovo.com/lxcc-overview/
Lenovo XCC Logger Utility	Application that reports the XCC events to local OS system log. **Interface** • CLI application **Usage and downloads** • https://pubs.lenovo.com/lxcc-logger-linux/ • https://pubs.lenovo.com/lxcc-logger-windows/
Lenovo XClarity Administrator	Centralized interface for multi-server management. **Interface** • Web GUI interface • Mobile application • REST API **Usage and downloads** https://pubs.lenovo.com/lxca/

Options	Description
Lenovo XClarity Essentials toolset	Portable and light toolset for server configuration, data collection, and firmware updates. Suitable both for single-server or multi-server management contexts. **Interface** • **OneCLI**: CLI application • **Bootable Media Creator**: CLI application, GUI application • **UpdateXpress**: GUI application **Usage and downloads** https://pubs.lenovo.com/lxce-overview/
Lenovo XClarity Provisioning Manager	UEFI-based embedded GUI tool on a single server that can simplify management tasks. **Interface** • Web interface (BMC remote access) • GUI application **Usage and downloads** https://pubs.lenovo.com/lxpm-overview/ **Important:** Lenovo XClarity Provisioning Manager (LXPM) supported version varies by product. All versions of Lenovo XClarity Provisioning Manager are referred to as Lenovo XClarity Provisioning Manager and LXPM in this document, unless specified otherwise. To see the LXPM version supported by your server, go to https://pubs.lenovo.com/lxpm-overview/.
Lenovo XClarity Integrator	Series of applications that integrate the management and monitoring functionalities of the Lenovo physical servers with the software used in a certain deployment infrastructure, such as VMware vCenter, Microsoft Admin Center, or Microsoft System Center while delivering additional workload resiliency. **Interface** • GUI application **Usage and downloads** https://pubs.lenovo.com/lxci-overview/

Options	Description
Lenovo XClarity Energy Manager	Application that can manage and monitor server power and temperature. **Interface** • Web GUI Interface **Usage and downloads** https://datacentersupport.lenovo.com/solutions/lnvo-lxem
Lenovo Capacity Planner	Application that supports power consumption planning for a server or rack. **Interface** • Web GUI Interface **Usage and downloads** https://datacentersupport.lenovo.com/solutions/lnvo-lcp

Functions

Options		Functions							
		Multi-system mgmt	OS deploy-ment	System configu-ration	Firm-ware up-dates[1]	Event-s/alert moni-toring	Inven-tory/ logs	Pow-er mgmt	Power planning
Lenovo XClarity Controller				√	√[2]	√	√[4]		
Lenovo XCC Logger Utility						√			
Lenovo XClarity Administrator		√	√	√	√[2]	√	√[4]		
Lenovo XClarity Essen-tials toolset	OneCLI	√		√	√[2]	√	√		
	Bootable Media Creator			√	√[2]		√[4]		
	UpdateXpress			√	√[2]				
Lenovo XClarity Provisioning Manager			√	√	√[3]		√[5]		
Lenovo XClarity Integrator		√		√	√	√	√	√[6]	
Lenovo XClarity Energy Manager		√				√		√	
Lenovo Capacity Planner									√[7]

Notes:

1. Most options can be updated through the Lenovo tools. Some options, such as GPU firmware or Omni-Path firmware require the use of supplier tools.
2. The server UEFI settings for option ROM must be set to **Auto** or **UEFI** to update firmware using Lenovo XClarity Administrator, Lenovo XClarity Essentials, or Lenovo XClarity Controller.
3. Firmware updates are limited to Lenovo XClarity Provisioning Manager, Lenovo XClarity Controller, and UEFI updates only. Firmware updates for optional devices, such as adapters, are not supported.

4. The server UEFI settings for option ROM must be set to **Auto** or **UEFI** for detailed adapter card information, such as model name and firmware levels, to be displayed in Lenovo XClarity Administrator, Lenovo XClarity Controller, or Lenovo XClarity Essentials.
5. Limited inventory.
6. Power management function is supported only by Lenovo XClarity Integrator for VMware vCenter.
7. It is highly recommended that you check the power summary data for your server using Lenovo Capacity Planner before purchasing any new parts.

Chapter 2. Hardware components

This section contains information about each of the components in the chassis and node.

Front view

The following sections show the controls, LEDs, and connectors on the front of the chassis and node.

Chassis front view

This section contains information on the front of the chassis installed with nodes.

The chassis can contain up to four 1U nodes or up to two 2U nodes.

Important:

- For proper cooling, each node tray must be installed with either a node or node tray fillers before the nodes in the chassis are powered on.
- The installation of nodes must follow the sequence of the tray numbering.

Four 1U nodes

For four 1U nodes: the two nodes in the right trays (2 and 4) must be installed upside down.

The following illustration shows the front view of the chassis and respective node trays in the chassis.

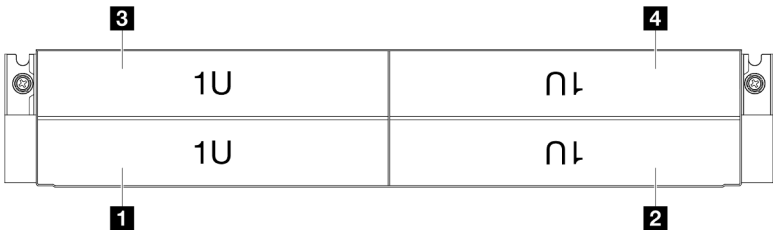

Figure 1. Chassis front view with four 1U nodes

3 Node tray 3	4 Node tray 4
1 Node tray 1	2 Node tray 2

Node front view

This section contains information on the controls and connectors on the front of the ThinkSystem SD530 V3 node. Depending on the specific configuration, some of the components or connectors might not be supported.

Front view of the SD530 V3 node

See the following illustration for components and connectors on the front of the ThinkSystem SD530 V3 node.

© Copyright Lenovo 2025

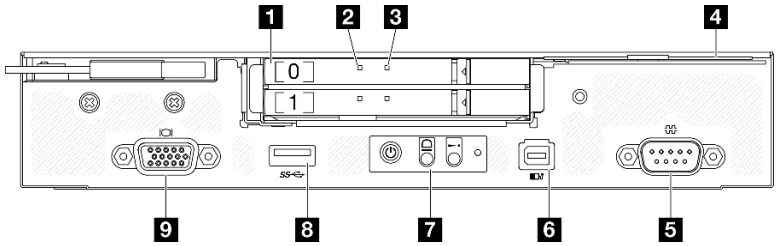

Figure 2. Front view of the ThinkSystem SD530 V3 node

Table 9. Components on the front of the ThinkSystem SD530 V3 node

1 E3.S drive bay	6 External diagnostic handset connector
2 Drive activity LED	7 Front operator panel buttons and LEDs
3 Drive status LED	8 USB 3.2 Gen 1 (5 Gbps) connector
4 Pull-out information tab	9 VGA connector
5 Serial connector	

1 E3.S drive bays

- Install E3.S drives or drive fillers to these bays (see “Hot-swap drive replacement” on page 93).
- For more information about the drive LEDs, see “Drive LEDs” on page 209.

2 & 3 Drive activity LED & Drive status LED

4 Pull-out information tab

This tab contains below information:

- Network information such as MAC address and XCC network access label.
- Drive bay numbers.

For more information about this tab, see “Identify the system and access the Lenovo XClarity Controller” on page 33.

5 Serial connector

Connect a 9-pin serial device to this connector.

6 External diagnostic handset connector

Connect the external diagnostics handset to this connector.

For more details, see “External Diagnostics Handset” on page 213.

7 Front operator panel buttons and LEDs

For more information about the front operator panel buttons and LEDs, see “Front operator panel LEDs” on page 209.

8 USB 3.2 Gen 1 (5 Gbps) connector

Connect a USB device, such as a mouse, keyboard, or other devices, to this connector.

9 VGA connector

Connect a monitor to this connector.

Note: The maximum video resolution is 1920 x 1200 at 60 Hz.

Rear view

The following sections show the rear of the D3 Chassis and SD530 V3 node.

Chassis rear view

This section contains information on the rear of the chassis.

Notes:

- Depending on the specific configuration, the hardware might look slightly different from the illustrations in this section.
- The chassis can contain up to four 1U nodes or up to two 2U nodes.

Important:

- For proper cooling, each node tray must be installed with either a node or node tray fillers before the nodes in the chassis are powered on.

Chassis rear view

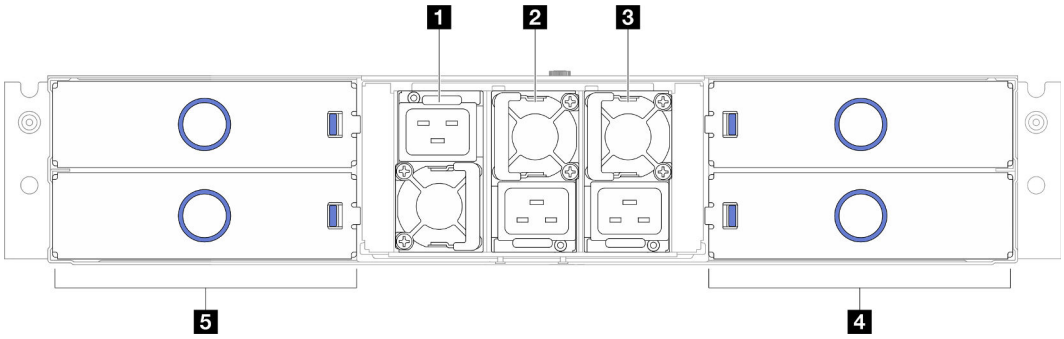

Figure 3. Chassis rear view

Table 10. Components on the rear of the chassis

1 PSU slot 1 (the PSU must be installed with the fan downward)	2 PSU slot 2 (the PSU must be installed with the fan upward)
3 PSU slot 3 (the PSU must be installed with the fan upward)	4 Node trays (the nodes must be installed right-side up)
5 Node trays (the nodes must be installed upside down)	

1 / 2 / 3 PSU slots

Install power supply units to these slots, connect them to power cords. Make sure the power cords are connected properly.

Important: When installing the power supply units, make sure to follow the instruction on the label in each slot.

- For slot 1 (1), the PSU must be installed with the fan downward.
- For slots 2 and 3 (2 and 3), the PSU must be installed with the fan upward.

Following are the power supplies supported by the system:

- CRPS 1300-watt Titanium, input power 200-240V
- CRPS 1300-watt Platinum, input power 200-240V
- CRPS 1600-watt Titanium, input power 200-240V
- CRPS 2000-watt Titanium, input power 200-240V
- CRPS 2700-watt Titanium, input power 200-240V
- CRPS 2700-watt Platinum, input power 200-240V

For more information on the power supply LED, see “Power supply LED” on page 210.

Node rear view

This section contains information on the controls and connectors on the rear of the ThinkSystem SD530 V3 node. Depending on the specific configuration, some of the components or connectors might not be supported.

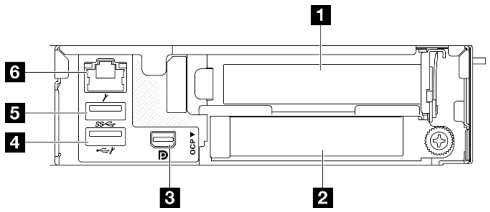

Figure 4. Rear view

Table 11. Components on the rear view

1 “PCIe slot 1” on page 22	4 “USB 2.0 connector with Lenovo XClarity Controller (XCC) management” on page 23
2 “OCP slot” on page 22	5 “USB 3.2 Gen 1 (5 Gbps) connector” on page 23
3 “Mini DisplayPort connector” on page 23	6 “XCC system management port (10/100/1000 Mbps RJ-45)” on page 23

1 PCIe slots

Install PCIe adapters to the riser.

Table 12. PCIe slots

1 PCIe slot 1	PCI Express 5.0 x16, HH/HL, 75-watt

2 OCP slot

The system may support a 2-port or a 4-port OCP module for network connections. Port numbering are shown in the illustrations below.

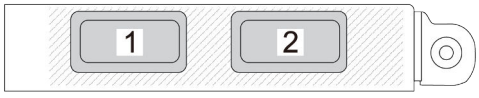

Figure 5. Port numbering — 2-port OCP module

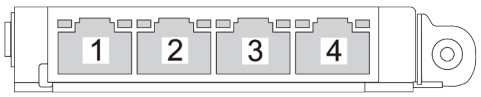

Figure 6. Port numbering — 4-port OCP 3.0 module

3 Mini DisplayPort connector

Connect a Mini DisplayPort-compatible video device, such as a monitor, to this connector.

Note: The maximum video resolution is 1920 x 1200 at 60 Hz.

4 USB 2.0 connector with Lenovo XClarity Controller (XCC) management

Note: This is the only USB port that supports USB automation update of the firmware and RoT security module.

Connection to Lenovo XClarity Controller is primarily intended for users with a mobile device running the Lenovo XClarity Controller mobile application. When a mobile device is connected to this USB port, an Ethernet over USB connection is established between the mobile application running on the device and the Lenovo XClarity Controller.

Select **Network** in **BMC Configuration** to view or modify settings.

Four types of settings are available:

- **Host only mode**

  In this mode, the USB port is always solely connected to the server.
- **BMC only mode**

  In this mode, the USB port is always solely connected to Lenovo XClarity Controller.
- **Shared mode: owned by BMC**

  In this mode, connection to the USB port is shared by the server and Lenovo XClarity Controller, while the port is switched to Lenovo XClarity Controller.
- **Shared mode: owned by host**

  In this mode, connection to the USB port is shared by the server and Lenovo XClarity Controller, while the port is switched to the server.

5 USB 3.2 Gen 1 (5 Gbps) connector

Connect a USB device, such as a mouse, keyboard, or other devices, to this connector.

6 XCC system management port (10/100/1000 Mbps RJ-45)

The node has a 10/100/1000 Mbps RJ-45 connector dedicated to Lenovo XClarity Controller, which cannot be accessed directly from the production network. A dedicated management network provides additional security by physically separating the management network traffic from the production network. You can use the Setup Utility to configure the node to use a dedicated systems-management network or a shared network.

See the following for more information:

- "Set the network connection for the Lenovo XClarity Controller" on page 187

- “XCC system management port LEDs” on page 213

Top view

This following illustration provides information on the top view of the ThinkSystem SD530 V3 node.

Note: Depending on the specific configuration, the hardware might look slightly different from the illustrations in this section.

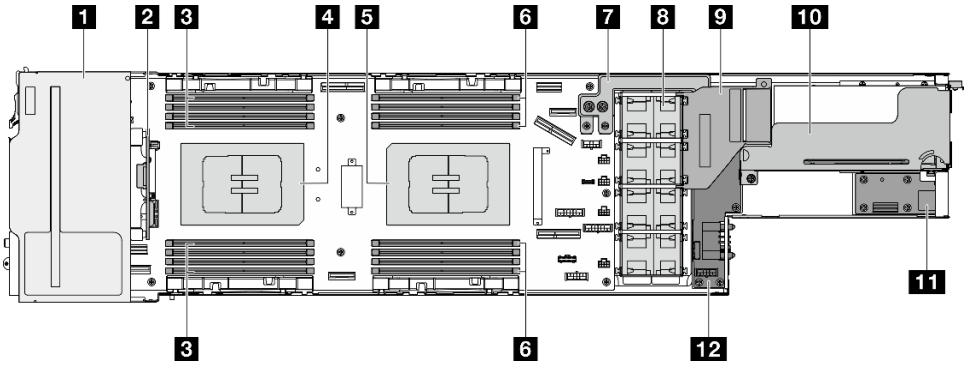

Figure 7. Top view of SD530 V3

Table 13. Components on the top view

1 E3.S drive cage	7 Power bus bar
2 E3.S drive backplane	8 Fans and fan cage
3 DIMMs 1-8	9 GPU air duct*
4 Processor 1	10 PCIe riser assembly*
5 Processor 2	11 Rear I/O module*
6 DIMMs 9-16	12 Power distribution board

Note: * Depending on the specific configuration, the node might not come with this component.

Chassis midplane

The following illustration shows the location and connectors of the chassis midplane.

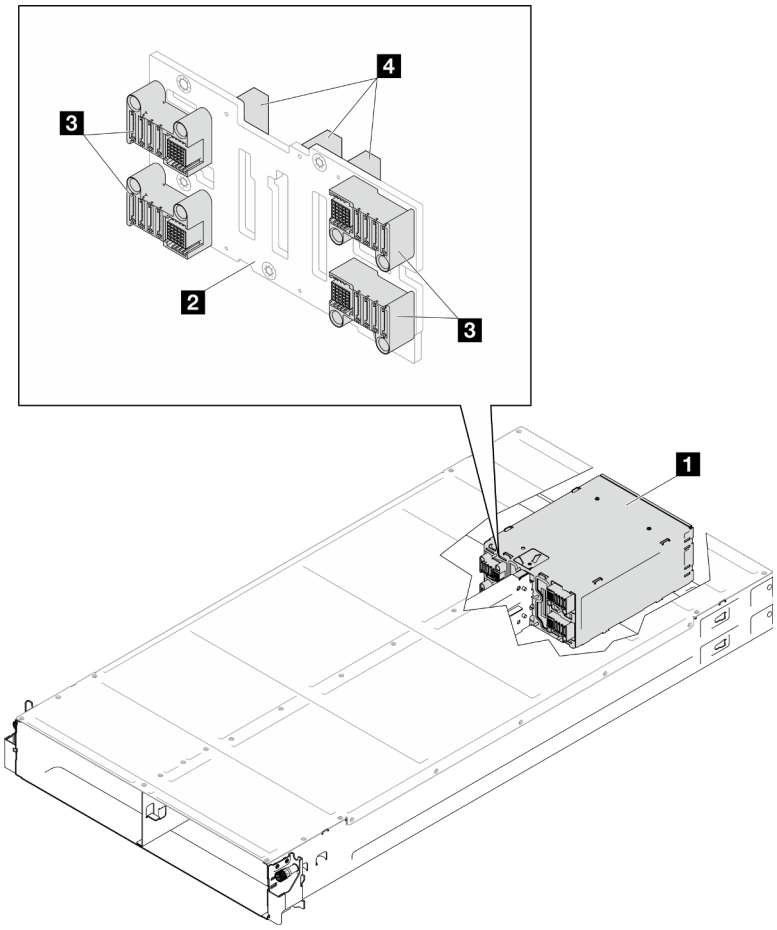

Figure 8. Chassis midplane location and connectors

1 PSU cage	3 PDB connectors
2 Chassis midplane	4 PSU connectors

1 PSU cage**:** For the PSU slots, see "Chassis rear view" on page 21.

2 Chassis midplane**:** For the replacement of the PSU cage and Chassis midplane, see "PSU cage and chassis midplane replacement" on page 62.

3 PDB connectors**:** When a node is installed in the chassis, the power distribution board (PDB) in the node is connected to the corresponding connector on the chassis midplane.

4 PSU connectors**:** When a hot-swap power supply unit (PSU) is installed in the PSU cage, the PSU is connected to the corresponding connector on the chassis midplane.

Notes:

- The firmware of the chassis midplane can be updated via Lenovo XClarity Controller (XCC) and Lenovo XClarity Essentials OneCLI (LXCE OneCLI). **Only the caretaker node can perform this update**.
- By default, the **caretaker node** is automatically selected by the PSoC firmware on the chassis midplane. To change the chassis caretaker preference, see https://pubs.lenovo.com/xcc2/NN1ia_c_d3_chassis.
- Go to "Update the firmware" on page 189 for more information on firmware updating tools.

System-board layout

The following sections provide information about the connectors and switches that are available on the system board.

For more information about the LEDs that are available on the system board, see “System-board LEDs” on page 212.

System-board connectors

This section contains information on the internal connectors on the system board.

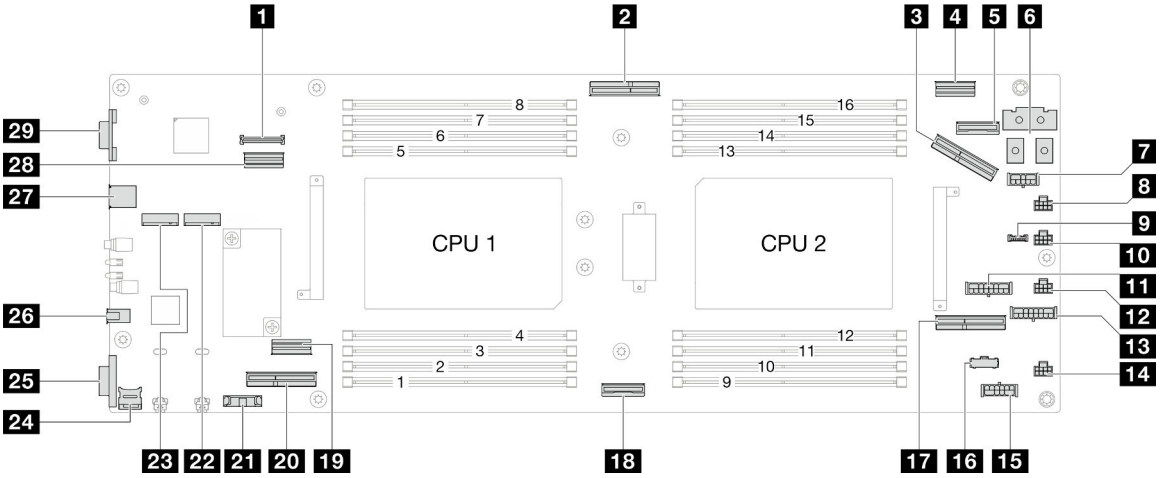

Table 14. System-board connectors

1 Firmware and RoT security module connector	16 Node sideband connector
2 OCP signal connector	17 (Reserved)
3 PCIe riser slot 1 connector (Gen5)	18 NVMe 0-1 connector (Gen5)
4 RAID signal connector	19 SATA connector
5 OCP power and sideband connector	20 PCIe riser slot 1 connector (Gen5)
6 Power bus bar connector	21 CMOS battery socket
7 RAID power connector	22 M.2 bay 1
8 Fan 1 connector	23 M.2 bay 0
9 (Reserved)	24 MicroSD card socket
10 Fan 2 connector	25 Serial connector
11 Backplane power connector	26 External diagnostic handset connector
12 Fan 3 connector	27 USB connector
13 PCIe riser power connector	28 Rear I/O signal connector
14 Fan 4 connector	29 VGA connector
15 P12V AUX power connector	

System-board switches

This section contains information on the location of the switches, jumpers, and buttons on the server.

Important:

1. Before you change any switch settings or move any jumpers, turn off the server; then, disconnect all power cords and external cables. Review the following information:
   - https://pubs.lenovo.com/safety_documentation/
   - “Installation Guidelines” on page 39
   - “Handling static-sensitive devices” on page 41
   - “Power off the node” on page 46
2. Any system-board switch or jumper block that is not shown in the illustrations in this document are reserved.

Note: If there is a clear protective sticker on the top of the switch blocks, you must remove and discard it to access the switches.

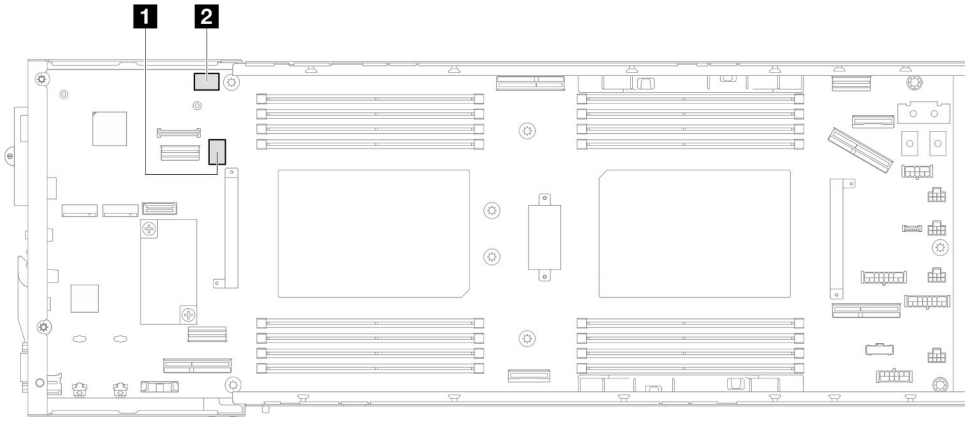

Figure 9. System-board switches

1 SW5	2 SW13

SW5 switch block

Table 15. SW5 switch block definition

Switch number	Switch name	Usage description	
		On	Off
1	Force BMC reset	Forces hot reset BMC chip	Normal (default)
2	Force BMC CPU reset	Forces warm XCC and CPU rest	Normal (default)
3	ME security override	Enables ME low security mode	Normal (default)
4	Password clear	Forces reset uEFI password	Normal (default)
5	Low security	Enables XCC low security mode	Normal (default)
6	ME recovery	Forces ME into recovery mode	Normal (default)

Table 15. SW5 switch block definition (continued)

Switch number	Switch name	Usage description	
		On	Off
7	BMC force update	Forces XCC boot	Normal (default)
8	FPGA power permission override	Ignores Power Permission and allows system to power on	Normal (default)

SW13 switch block

Table 16. SW13 switch block definition

Switch number	Switch name	Usage description	
		On	Off
1	(Reserved)	(Reserved)	Normal (default)
2	Debug Atscale	Forces to enable the Atscale feature	Normal (default)
3	RTS (Real time clock) reset	Clears CMOS data	Normal (default)
4	FPGA MFG mode	Enables FPGA MFG mode	Normal (default)
5	Serial select	Normal (default) Sends uEFI debug message to serial port	Sends the XCC to serial port
6	(Reserved)	(Reserved)	Normal (default)
7	Bypass PFR	Enables bypass PFR	Normal (default)
8	BMC Trusted Platform Module (TPM) physical presence	Asserts TPM physical presence	Normal (default)

System LEDs and diagnostics display

The following section provides information on available system LEDs and diagnostics display.

For more information, refer to “Troubleshooting by system LEDs and diagnostics display” on page 209.

Chapter 3. Parts list

Identify each of the components that is available for your system with the parts list.

For more information about ordering parts:

1. Go to **http://datacentersupport.lenovo.com** and navigate to the support page for your node or chassis.
2. Click **Parts**.
3. Enter the serial number to view a listing of parts for your system.

It is highly recommended that you check the power summary data for your server using Lenovo Capacity Planner before purchasing any new parts.

Note: Depending on the model, your server components might look slightly different from the illustration.

The parts listed in the following tables are identified as one of the following:

- **T1:** Tier 1 customer replaceable unit (CRU). Replacement of Tier 1 CRUs is your responsibility. If Lenovo installs a Tier 1 CRU at your request with no service agreement, you will be charged for the installation.
- **T2:** Tier 2 customer replaceable unit (CRU). You may install a Tier 2 CRU yourself or request Lenovo to install it, at no additional charge, under the type of warranty service that is designated for your server.
- **F:** Field replaceable unit (FRU). FRUs must be installed only by trained service technicians.
- **C:** Consumable and Structural parts. Purchase and replacement of consumable and structural parts is your responsibility. If Lenovo acquires or installs a structural component at your request, you will be charged for the service.

Chassis components

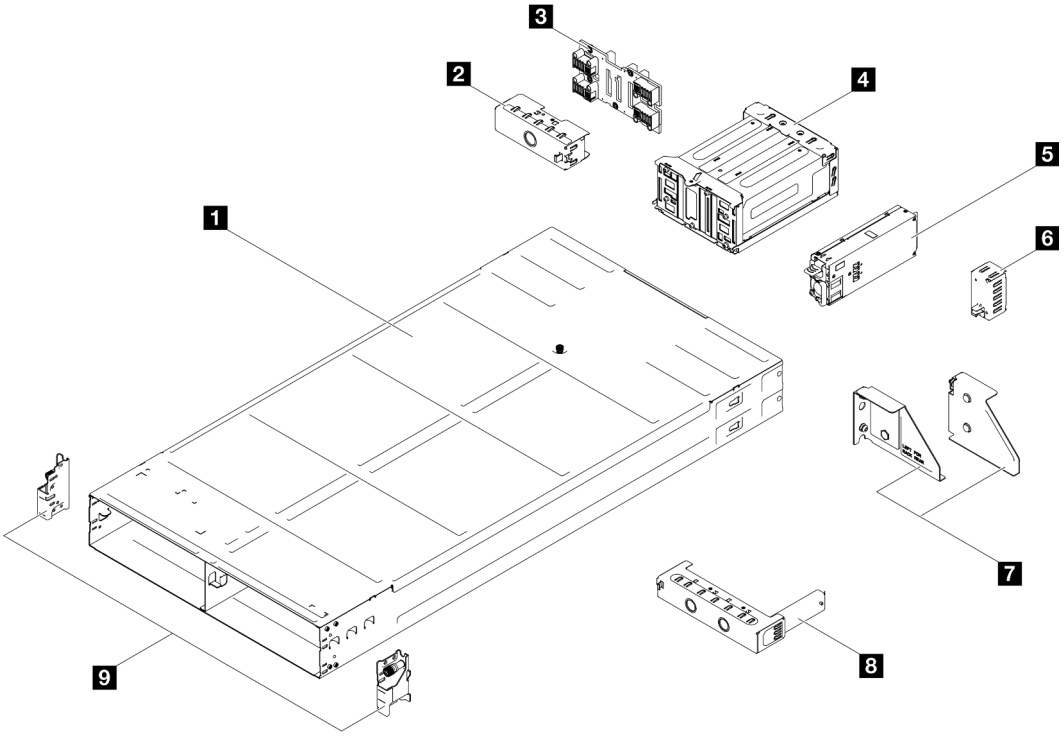

Figure 10. Chassis components

© Copyright Lenovo 2025

Description	Type
1 Chassis	T2
2 Node tray rear filler	T1
3 Chassis midplane	T2
4 PSU cage	T1
5 CRPS power supply unit	T2
6 PSU filler	T1
7 Chassis rear shipping brackets (left and right)	T1
8 Node tray front filler	T1
9 Chassis front EIA brackets (left and right)	T1

Node components

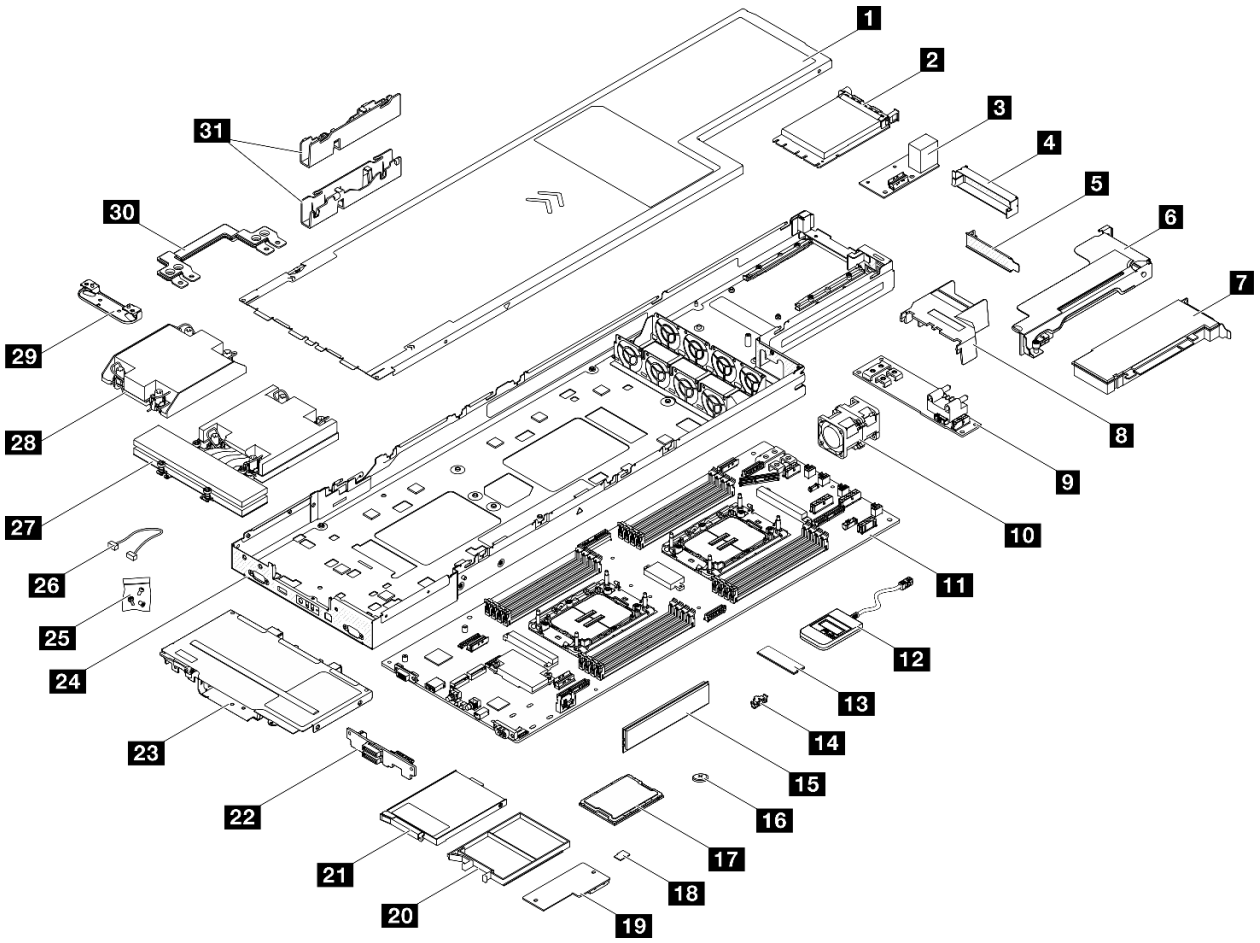

Figure 11. Node components

Description	Type	Description	Type
1 Top cover	T1	17 Processor	F
2 • OCP 3.0 module • ThinkSystem OCP 4 to 1 Management Port Consolidation Adapter	T1	18 MicroSD card	T1
3 Rear I/O module	T1	19 Firmware and RoT security module	F
4 PCIe filler	T1	20 E3.S drive filler	T1
5 PCIe riser filler	T1	21 E3.S drive	T1
6 PCIe riser	T2	22 E3.S drive backplane	T1
7 PCIe adapter	T1	23 E3.S drive cage	T2
8 GPU air duct	T1	24 Node tray	F
9 Power distribution board	T2	25 Screws	T1
10 Fan	T1	26 Cables	T1
11 System board	F	27 1U performance heat sink and processor carrier	F
12 External diagnostics handset	T1	28 1U standard heat sink and processor carrier	F
13 M.2 drive	T1	29 Heat sink support bracket	F
14 M.2 drive retainer	T1	30 Power bus bar	T1
15 Memory module	T1	31 Cable ducts	T1
16 CMOS battery (CR2032)	C		

Power cords

Several power cords are available, depending on the country and region where the server is installed.

To view the power cords that are available for the server:

1. Go to:

   http://dcsc.lenovo.com/#/

2. Click **Preconfigured Model** or **Configure to order**.
3. Enter the machine type and model for your server to display the configurator page.
4. Click **Power → Power Cables** to see all line cords.

Notes:

- For your safety, a power cord with a grounded attachment plug is provided to use with this product. To avoid electrical shock, always use the power cord and plug with a properly grounded outlet.
- Power cords for this product that are used in the United States and Canada are listed by Underwriter's Laboratories (UL) and certified by the Canadian Standards Association (CSA).
- For units intended to be operated at 115 volts: Use a UL-listed and CSA-certified cord set consisting of a minimum 18 AWG, Type SVT or SJT, three-conductor cord, a maximum of 15 feet in length and a parallel blade, grounding-type attachment plug rated 15 amperes, 125 volts.

- For units intended to be operated at 230 volts (U.S. use): Use a UL-listed and CSA-certified cord set consisting of a minimum 18 AWG, Type SVT or SJT, three-conductor cord, a maximum of 15 feet in length and a tandem blade, grounding-type attachment plug rated 15 amperes, 250 volts.
- For units intended to be operated at 230 volts (outside the U.S.): Use a cord set with a grounding-type attachment plug. The cord set should have the appropriate safety approvals for the country in which the equipment will be installed.
- Power cords for a specific country or region are usually available only in that country or region.

Chapter 4. Unboxing and setup

Information in this section assists you on unboxing and setting up the system. When unboxing the chassis and node, check if the items in the package are correct, and learn where to find information of system serial number and Lenovo XClarity Controller access. Make sure to follow the instructions in "System setup checklist" on page 35 when setting up the chassis and node.

System package contents

When you receive your system, verify that the shipment contains everything that you expected to receive.

The system package includes the following items:

- Node
- Chassis
- Rail installation kit*. Installation guide is provided in the package.
- Material box, including items such as power cords*, accessory kit, and printed documents.

Notes:

- Some of the items listed are available on select models only.
- Items marked with asterisk(*) are optional.

If any item is missing or damaged, contact your place of purchase. Make sure that you retain your proof of purchase and packing material. They might be required to receive warranty service.

Identify the system and access the Lenovo XClarity Controller

This section contains instruction on how to identify the system and where to find the Lenovo XClarity Controller access information.

© Copyright Lenovo 2025

Identifying your system

When you contact Lenovo for help, the machine type, model, and serial number information help support technicians to identify your system and provide faster service.

The illustration below shows the location of the ID label which contains the chassis model number, machine type, and serial number of the chassis. You can also add other system information labels to the front of the node in the customer label spaces.

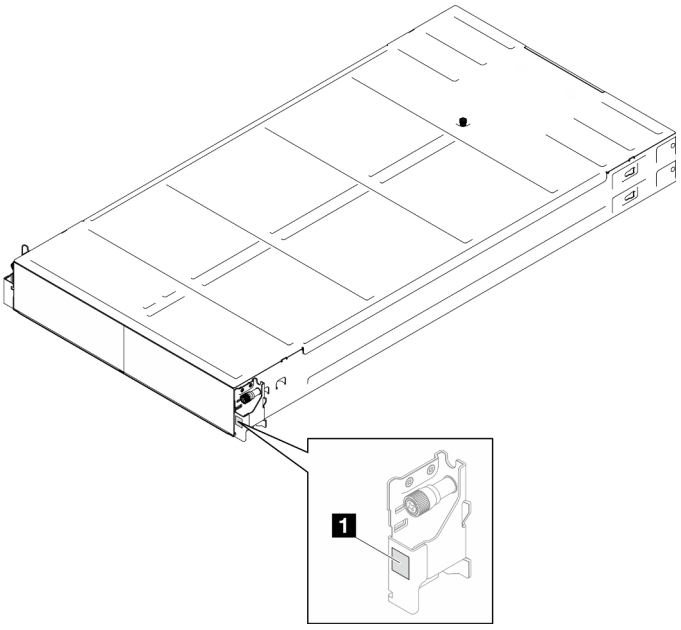

Figure 12. Location of the ID label on the chassis

Table 17. ID label on the front of the chassis

1 ID label

Lenovo XClarity Controller network access label

In addition, the Lenovo XClarity Controller network access label for the node can be found on the pull-out information tag located at the front of the node. This pull-out information tag also shows the bay numbers of the hot-swap drives. You can use the information on the pull-out tag to access the XCC MAC address and LLA for the node. The left node information is at the left bottom side, while the right node information is on the right upper side. You can also use the information tag for your own node labeling information, such as the hostname, the system name, and the inventory bar code.

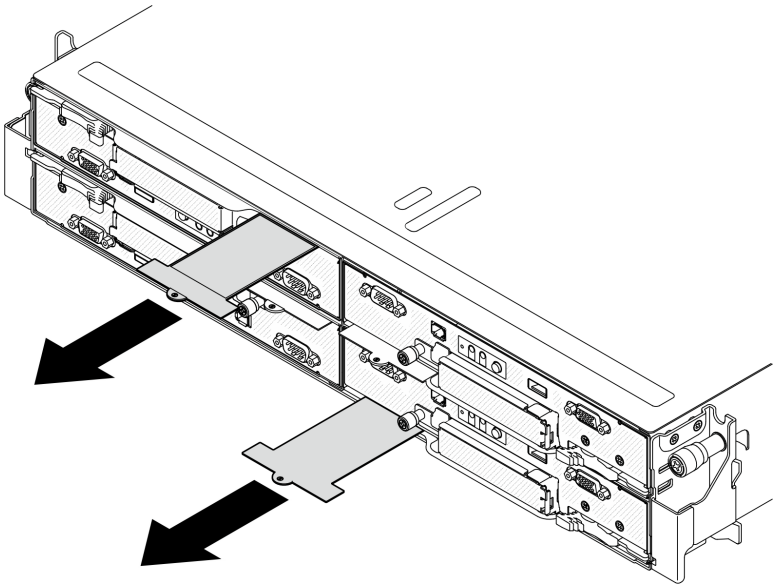

Figure 13. Lenovo XClarity Controller network access label on the pull-out information tab

Service information and QR code

On the inside surface of the tray cover, there is a quick response (QR) code that provides mobile access to service information. You can scan the QR code with a mobile device using a QR code reader application and get quick access to the Service Information web page. The Service Information web page provides additional information for parts installation and replacement videos, and error codes for solution support.

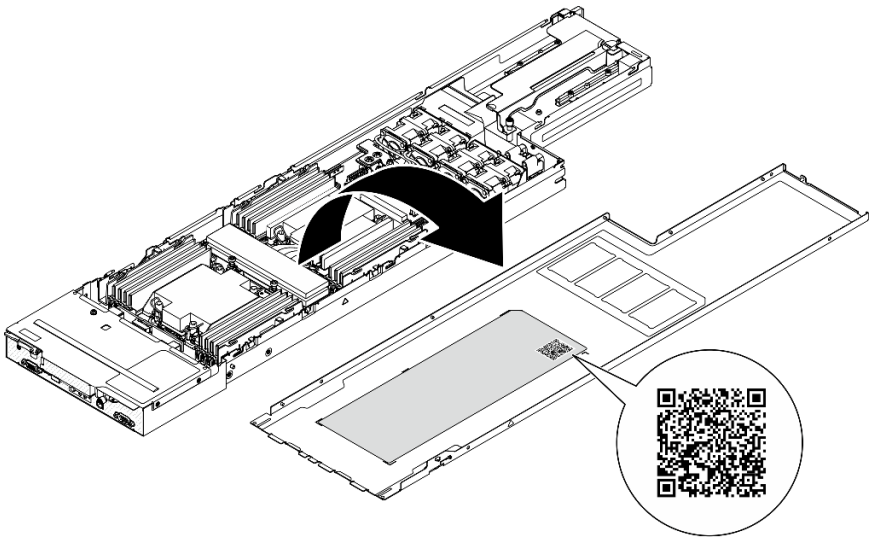

Figure 14. Service information and QR code

System setup checklist

Use the system setup checklist to make sure that you have performed all tasks that are required to set up your system.

The system setup procedure varies depending on the configuration of the system when it was delivered. In some cases, the system is fully configured and you just need to connect the system to the network and an

AC power source, and then you can power on the system. In other cases, the system needs to have hardware options installed, requires hardware and firmware configuration, and requires an operating system to be installed.

The following steps describe the general procedure for setting up a system.

Setup the system hardware

Complete the following procedures to setup the system hardware.

1. Unpack the system package. See "System package contents" on page 33.
2. Install any required hardware or system options. See the related topics in Chapter 5 "Hardware replacement procedures" on page 39.
3. If necessary, install the rail to a standard rack cabinet. Follow the instruction in *Rail Installation Guide* that comes with the rail installation kit.
4. To install the chassis to the rack, see "Install the chassis to the rack" on page 50.

   To install the node into the chassis, see "Install a node to the chassis" on page 74.
5. Connect all external cables to the system. See Chapter 2 "Hardware components" on page 19 for connectors locations.

   Typically, you will need to connect the following cables:

   - Connect the system to the power source.
   - Connect the system to the data network.
   - Connect the system to the storage device.
   - Connect the system to the management network.
6. Power on the system.

   The power button location and power LED are specified in "Troubleshooting by system LEDs and diagnostics display" on page 209.

   A node can be turned on (power LED on) in any of the following ways:

   - You can press the power button.
   - The node can restart automatically after a power interruption.
   - The node can respond to remote power-on requests sent to the Lenovo XClarity Controller.

   Note: You can access the management processor interface to configure the system without powering on the system. Whenever the system is connected to power, the management processor interface is available. For details about accessing the management system processor, see "Opening and Using the XClarity Controller Web Interface" section in the XCC documentation compatible with your system at https://pubs.lenovo.com/lxcc-overview/.
7. Validate the system. Make sure that the power LED, Ethernet connector LED, and network LED are lit with green light, which means the system hardware was set up successfully.

   See "Troubleshooting by system LEDs and diagnostics display" on page 209 for more information on the LED indications.

Configure the system

Complete the following procedures to configure the system. For detailed instructions, refer to Chapter 7 "System configuration" on page 187.

1. Set the network connection for the Lenovo XClarity Controller to the management network.
2. Update the firmware for the system, if necessary.

3. Configure the firmware for the system.

   The following information is available for RAID configuration:

   - https://lenovopress.lenovo.com/lp0578-lenovo-raid-introduction
   - https://lenovopress.lenovo.com/lp0579-lenovo-raid-management-tools-and-resources
4. Install the operating system.
5. Back up the system configuration.
6. Install the applications and programs for which the system is intended to be used.

Chapter 5. Hardware replacement procedures

This section provides installation and removal procedures for all serviceable system components. Each component replacement procedure references any tasks that need to be performed to gain access to the component being replaced.

Installation Guidelines

Before installing components in your node or chassis, read the installation guidelines.

Before installing optional devices, read the following notices carefully:

Attention: Prevent exposure to static electricity, which might lead to system halt and loss of data, by keeping static-sensitive components in their static-protective packages until installation, and handling these devices with an electrostatic-discharge wrist strap or other grounding system.

- Read the safety information and guidelines to ensure your safety at work:
  - A complete list of safety information for all products is available at:

    https://pubs.lenovo.com/safety_documentation/
  - The following guideline is also available at: “Handling static-sensitive devices” on page 41.
- Make sure the components you are installing are supported by your system.
  - For a list of supported optional components for the system, see https://serverproven.lenovo.com.
  - For the option package contents, see https://serveroption.lenovo.com/.
- For more information about ordering parts:
  1. Go to **http://datacentersupport.lenovo.com** and navigate to the support page for your node or chassis.
  2. Click **Parts**.
  3. Enter the serial number to view a listing of parts for your system.
- When you install a new node, download and apply the latest firmware. This will help ensure that any known issues are addressed, and that your node is ready to work with optimal performance. Go to https://datacentersupport.lenovo.com/products/servers/thinksystem/sd530v3/7dd3/downloads/driver-list to download the latest firmware and driver updates for your server.

  Important: Some cluster solutions require specific code levels or coordinated code updates. If the component is part of a cluster solution, verify the latest Best Recipe code level menu for cluster supported firmware and driver before you update the code.
- If you replace a part, such as an adapter, that contains firmware, you might also need to update the firmware for that part. For more information about updating firmware, see “Update the firmware” on page 189.
- It is good practice to make sure that the system is working correctly before installing an optional component.
- Keep the working area clean, and place the removed components on a flat and smooth surface that does not shake or tilt.
- Do not attempt to lift an object that might be too heavy for you. If you have to lift a heavy object, read the following precautions carefully:
  - Make sure that you can stand steadily without slipping.
  - Distribute the weight of the object equally between your feet.

© Copyright Lenovo 2025

  - Use a slow lifting force. Never move suddenly or twist when you lift a heavy object.
  - To avoid straining the muscles in your back, lift by standing or by pushing up with your leg muscles.
- Back up all important data before you make changes related to the disk drives.
- Have a small flat-blade screwdriver, a small Phillips screwdriver, and a T30 torx screwdriver available.
- To view the error LEDs on the system board (system board assembly) and internal components, leave the power on.
- You do not have to turn off the node to remove or install hot-swap power supplies, hot-swap drives, or hot-plug USB devices. However, you must turn off the node and remove it from the chassis before performing any steps that involve removing or installing components or cables inside the node.
- When replacing power supply units, make sure to refer to redundancy rules.
- Blue on a component indicates touch points, where you can grip to remove a component from or install it in the server, open or close a latch, and so on.
- Except PSU, orange on a component or an orange label on or near a component indicates that the component can be hot-swapped if the server and operating system support hot-swap capability, which means that you can remove or install the component while the server is still running. (Orange can also indicate touch points on hot-swap components.) See the instructions for removing or installing a specific hot-swap component for any additional procedures that you might have to perform before you remove or install the component.
- PSU with a release tab is a hot-swap PSU. The color of the release tab does not affect the serviceability of the PSU.
- The red strip on the drives, adjacent to the release latch, indicates that the drive can be hot-swapped if the server and operating system support hot-swap capability. This means that you can remove or install the drive while the server is still running.

  Note: See the system specific instructions for removing or installing a hot-swap drive for any additional procedures that you might need to perform before you remove or install the drive.
- After finishing working on the node or chassis, make sure to reinstall all safety shields, guards, labels, and ground wires.

Safety inspection checklist

Use the information in this section to identify potentially unsafe conditions with your system. As each machine was designed and built, required safety items were installed to protect users and service technicians from injury.

Note: The product is not suitable for use at visual display workplaces according to §2 of the Workplace Regulations.

Attention: This is a Class A product. In a domestic environment, this product may cause radio interference in which case the user may be required to take adequate measures.

Note: The set-up of the server is made in the server room only.

CAUTION:
This equipment must be installed or serviced by trained personnel, as defined by the NEC, IEC 62368-1 & IEC 60950-1, the standard for Safety of Electronic Equipment within the Field of Audio/Video, Information Technology and Communication Technology. Lenovo assumes you are qualified in the servicing of equipment and trained in recognizing hazards energy levels in products. Access to the equipment is by the use of a tool, lock and key, or other means of security, and is controlled by the authority responsible for the location.

Important: Electrical grounding of the system is required for operator safety and correct system function. Proper grounding of the electrical outlet can be verified by a certified electrician.

Use the following checklist to verify that there are no potentially unsafe conditions:

1. Make sure that the power is off and the power cord is disconnected.
2. Check the power cord.
   - Make sure that the third-wire ground connector is in good condition. Use a meter to measure third-wire ground continuity for 0.1 ohm or less between the external ground pin and the frame ground.
   - Make sure that the power cord is the correct type.

     To view the power cords that are available for the server:

     a. Go to:

        http://dcsc.lenovo.com/#/

     b. Click **Preconfigured Model** or **Configure to order**.

     c. Enter the machine type and model for your server to display the configurator page.

     d. Click **Power → Power Cables** to see all line cords.
   - Make sure that the insulation is not frayed or worn.
3. Check for any obvious non-Lenovo alterations. Use good judgment as to the safety of any non-Lenovo alterations.
4. Check inside the server for any obvious unsafe conditions, such as metal filings, contamination, water or other liquid, or signs of fire or smoke damage.
5. Check for worn, frayed, or pinched cables.
6. Make sure that the power-supply cover tighteners (screws or rivets) have not been removed or tampered with.

System reliability guidelines

Review the system reliability guidelines to ensure proper system cooling and reliability.

Make sure the following requirements are met:

- When the system comes with redundant power, a power supply must be installed in each power-supply bay.
- Adequate space around the node and chassis must be spared to allow the cooling system to work properly. Leave approximately 50 mm (2.0 in.) of open space around the front and rear of the chassis. Do not place any object in front of the fans.
- For proper cooling and airflow, refit the node cover before you turn the power on. Do not operate the node with the node cover removed, for it might damage node components.
- Cabling instructions that come with optional components must be followed.
- A removed hot-swap drive must be replaced within two minutes after removal.
- A removed hot-swap power supply must be replaced by another power supply unit or a PSU filler within two minutes after removal.
- All processor sockets must contain either a socket cover or a processor with heat sink.

Handling static-sensitive devices

Review these guidelines before you handle static-sensitive devices to reduce the possibility of damage from electrostatic discharge.

Attention: Prevent exposure to static electricity, which might lead to system halt and loss of data, by keeping static-sensitive components in their static-protective packages until installation, and handling these devices with an electrostatic-discharge wrist strap or other grounding system.

- Limit your movement to prevent building up static electricity around you.
- Take additional care when handling devices during cold weather, for heating would reduce indoor humidity and increase static electricity.
- Always use an electrostatic-discharge wrist strap or other grounding system.
- While the device is still in its static-protective package, touch it to an unpainted metal surface on the outside of the node or chassis for at least two seconds. This drains static electricity from the package and from your body.
- Remove the device from the package and install it directly into the node or chassis without putting it down. If it is necessary to put the device down, put it back into the static-protective package. Never place the device on the node or chassis or on any metal surface.
- When handling a device, carefully hold it by the edges or the frame.
- Do not touch solder joints, pins, or exposed circuitry.
- Keep the device from others' reach to prevent possible damages.

Memory module installation rules and order

Memory modules must be installed in a specific order based on the memory configuration that you implement and the number of processors and memory modules installed in the server.

Supported memory types

For information on the types of memory module supported by this server, see "Memory" section in "Node technical specifications" on page 5.

Information about optimizing memory performance and configuring memory is available at the Lenovo Press website:

https://lenovopress.lenovo.com/servers/options/memory

In addition, you can take advantage of a memory configurator, which is available at the following site:

https://dcsc.lenovo.com/#/memory_configuration

For the specific information about the required installation order of memory modules in SD530 V3 based on the system configuration and memory mode that you are implementing, see below.

Memory modules and processors layout

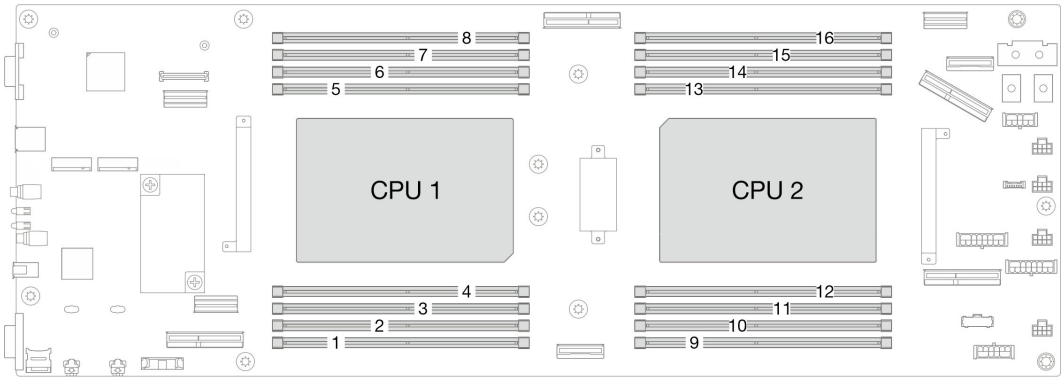

Figure 15. Memory modules and processors layout

The memory-channel configuration table below shows the relationship between the processors, memory controllers, memory channels, and memory module slot numbers.

Table 18. Memory slot and channel identification

Processor	**Processor 1**							
Channel	CH1 (7/H)	CH0 (6/G)	CH1 (5/F)	CH0 (4/E)	CH0 (0/A)	CH1 (1/B)	CH0 (2/C)	CH1 (3/D)
DIMM slot No.	**8**	**7**	**6**	**5**	**4**	**3**	**2**	**1**
Processor	**Processor 2**							
Channel	CH1 (3/D)	CH0 (2/C)	CH1 (1/B)	CH0 (0/A)	CH0 (4/E)	CH1 (5/F)	CH0 (6/G)	CH1 (7/H)
DIMM slot No.	**16**	**15**	**14**	**13**	**12**	**11**	**10**	**9**

Memory module installation guideline

- The following memory configurations and population sequences are supported on ThinkSystem SD530 V3:
  - "DRAM DIMMs installation order" on page 44 (RDIMMs or 3DS RDIMMs)
- At least one DIMM is required for each processor. Install at least eight DIMMs per processor for good performance.
- When a DIMM is replaced, the node provides automatic DIMM enablement capability without requiring you to use the Setup Utility to enable the new DIMM manually.

Attention:

- Install DIMMs of the same speed for optimal performance. Otherwise, the BIOS will find and run the lowest speed among all channels.
- Within a channel, always populate DIMMs with the maximum number of ranks in the farthest DIMM slot, followed by the nearest DIMM slot.
- When a processor is installed, each of the DIMM slots connected to the processor must be installed with a DIMM or DIMM filler.
  - DIMM slots 1-8 are connected to processor 1
  - DIMM slots 9-16 are connected to processor 2

DRAM DIMMs installation order

This section contains information of how to install DRAM DIMMs properly.

Independent memory mode installation order

In independent memory mode, memory channels can be populated with DIMMs in any order and you can populate all channels for each processor in any order with no matching requirements. Independent memory mode provides the highest level of memory performance, but lacks failover protection. The DIMM installation order for independent memory mode varies based on the number of processors and memory modules installed in the node.

Memory module installation order in independent mode

Follow the rules below when installing memory modules in independent mode:

- All memory modules must be DDR5 memory modules.
- At least one DDR5 DIMM is required per installed processor.
- All DDR5 DIMM must operate at the same speed in the same node.
- Memory population must be identical between processors.
- Memory modules from different vendors are supported.
- In each memory channel, populate the slot farthest from the processor (slot 0) first.
- Mixing x8 and x4 DIMM is not supported in a node.
- All the installed memory modules must be of the same type.

Note: System hang on POST may occur on a server operating in this configuration. In this case, contact Lenovo service to replace the failed DIMM for proper operation.

With one processor

The following table shows the DIMM population sequence for independent memory mode when one processor is installed.

Table 19. Independent mode memory population sequence for one processor

Total DIMMs	**Processor 1**							
	8	**7**	**6**	**5**	**4**	**3**	**2**	**1**
1					4			
2 *		7			4			
4*		7		5	4		2	
6		7	6	5	4		2	1
8	8	7	6	5	4	3	2	1
Note: * When there are two or four DIMMs installed per processor, 24 GB or 48 GB DIMMs are not supported.								

With two processors

The following tables show the DIMM population sequence for independent memory mode when two processors are installed.

Table 20. Independent mode memory population sequence for two processors

Total DIMMs	Processor 1							
	8	**7**	**6**	**5**	**4**	**3**	**2**	**1**
2					4			
4*		7			4			
8*		7		5	4		2	
12		7	6	5	4		2	1
16	8	7	6	5	4	3	2	1
Total DIMMs	**Processor 2**							
	9	**10**	**11**	**12**	**13**	**14**	**15**	**16**
2					13			
4*		10			13			
8*		10		12	13		15	
12		10	11	12	13		15	16
16	9	10	11	12	13	14	15	16

Note:
* When there are two or four DIMMs installed per processor, 24 GB or 48 GB DIMMs are not supported.

Memory mirroring mode installation order

Memory-mirroring mode provides full memory redundancy while reducing the total node memory capacity in half. Memory channels are grouped in pairs with each channel receiving the same data. If a failure occurs, the memory controller switches from the DIMMs on the primary channel to the DIMMs on the backup channel. The DIMM installation order for memory mirroring varies based on the number of processors and DIMMs installed in the node.

Memory mirroring guidelines:

- Memory mirroring reduces the maximum available memory by half of the installed memory. For example, if the node has 64 GB of installed memory, only 32 GB of addressable memory is available when memory mirroring is enabled.
- Each DIMM must be identical in size and architecture.
- DIMMs on each memory channel must be of equal density.
- If two memory channels have DIMMs, mirroring occurs across two DIMMs (channels 0/1 will both contain the primary/secondary memory caches).
- If three memory channels have DIMMs, mirroring occurs across all three DIMMs (channels 0/1, channels 1/2, and channels 2/0 will all contain primary/secondary memory caches).
- Partial Memory Mirroring is a sub-function of memory mirroring. It requires following the memory installation order of memory mirroring mode.

With one processor

The following table shows the DIMM population sequence for memory mirroring when one processor is installed.

Table 21. Memory Mirroring with one processor

Total DIMMs	Processor 1							
	8	**7**	**6**	**5**	**4**	**3**	**2**	**1**
8†	8	7	6	5	4	3	2	1
Note: † Sub NUMA Clustering (SNC2) feature can only be enabled when DIMMs are populated in this specified sequence. The SNC2 feature can be enabled via UEFI.								

With two processors

The following table shows the DIMM population sequence for memory mirroring mode when two processors are installed.

Table 22. Memory mirroring with two processors

Total DIMMs	Processor 1							
	8	**7**	**6**	**5**	**4**	**3**	**2**	**1**
8†	8	7	6	5	4	3	2	1
Total DIMMs	**Processor 2**							
	9	**10**	**11**	**12**	**13**	**14**	**15**	**16**
16†	9	10	11	12	13	14	15	16
Note: † Sub NUMA Clustering (SNC2) feature can only be enabled when DIMMs are populated in this specified sequence. The SNC2 feature can be enabled via UEFI.								

Power on and power off the node

Follow the instructions in this section to power on and power off the node.

Power on the node

After the node performs a short self-test (power status LED flashes quickly) when connected to input power, it enters a standby state (power status LED flashes once per second).

Power button location and power LED are specified in:

- Chapter 2 “Hardware components” on page 19
- “Troubleshooting by system LEDs and diagnostics display” on page 209

A node can be turned on (power LED on) in any of the following ways:

- You can press the power button.
- The node can restart automatically after a power interruption.
- The node can respond to remote power-on requests sent to the Lenovo XClarity Controller.

For information about powering off the compute node, see “Power off the node” on page 46.

Power off the node

The node remains in a standby state when it is connected to a power source, allowing the Lenovo XClarity Controller to respond to remote power-on requests. To completely power off the node (power status LED off), you must disconnect all power cables.

Power button location and power LED are specified in:

- Chapter 2 “Hardware components” on page 19
- “Troubleshooting by system LEDs and diagnostics display” on page 209

To place the node in a standby state (power status LED flashes once per second):

Note: The Lenovo XClarity Controller can place the node in a standby state as an automatic response to a critical system failure.

- Start an orderly shutdown using the operating system (if supported by your operating system).
- Press the power button to start an orderly shutdown (if supported by your operating system).
- Press and hold the power button for more than 4 seconds to force a shutdown.

When in a standby state, the node can respond to remote power-on requests sent to the Lenovo XClarity Controller. For information about powering on the compute node, see “Power on the node” on page 46.

Chassis replacement

Follow instructions in this section to remove or install the chassis from or to the rack.

Important: For safety, make sure that there is no node or power supply unit installed in the chassis when removing or installing the chassis from or to the rack.

Remove the chassis from the rack

Follow instructions in this section to remove the chassis from the rack.

About this task

To avoid potential danger, make sure to read and follow the safety information.

R006



CAUTION:
Do not place any object on top of a rack-mounted device unless that rack-mounted device is intended for use as a shelf.

Attention:

- Read “Installation Guidelines” on page 39 and “Safety inspection checklist” on page 40 to make sure that you work safely.
- Use safe practices when lifting the chassis. It is advised that the task of removing or installing the chassis be executed by two persons.

CAUTION:
Use safe practices when lifting the chassis.

Procedure

Step 1. Make preparations for this task.

a. If shipping brackets are installed on the rear of the rack, remove them.
   1. ❶ Remove the screws that secure the rear brackets.
   2. ❷ Slide the brackets toward the rear of the rack; then, remove the brackets from the rack and the chassis.

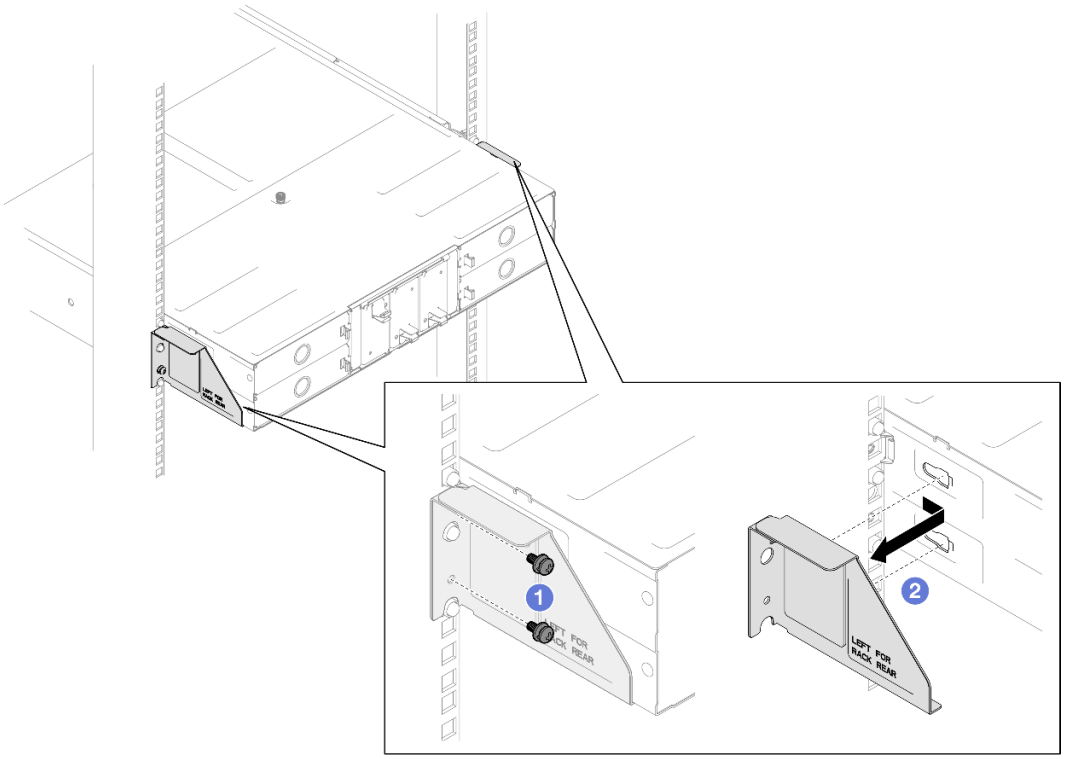

Figure 16. Removal of shipping brackets for 29-inch or 28.31-inch deep racks

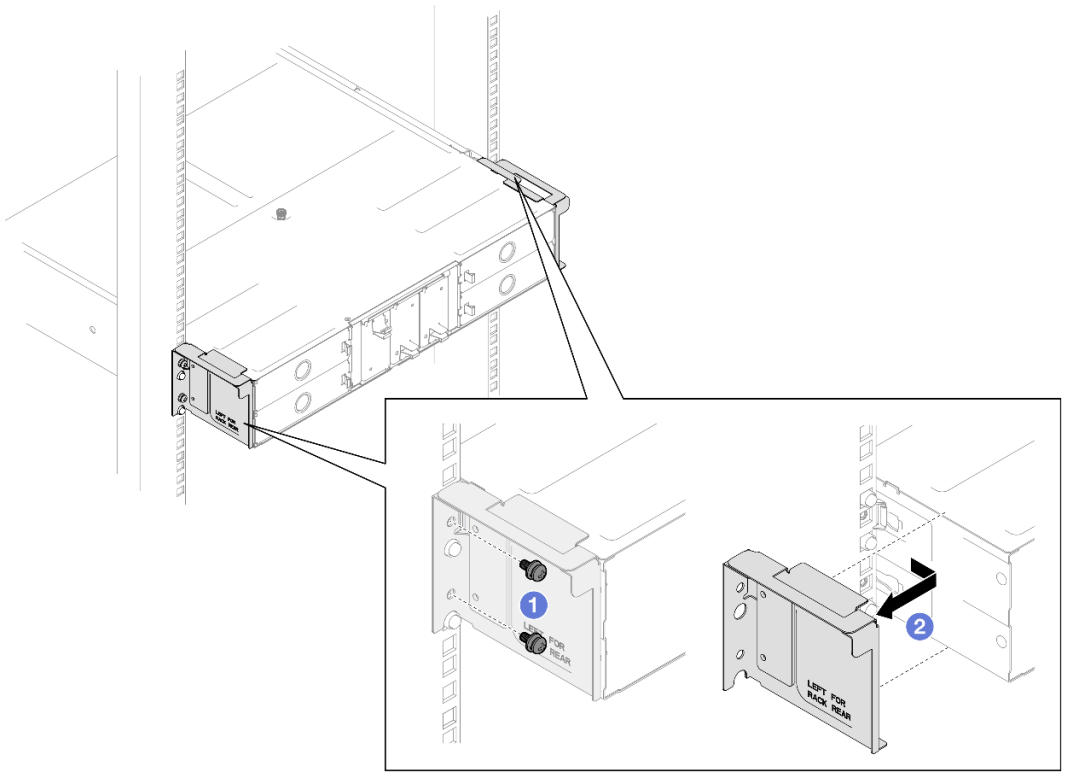

Figure 17. Removal of shipping brackets for 29.5-inch deep racks

b. If any nodes are installed in the chassis, power off all the nodes and disconnect all external cables from the nodes; then, remove the nodes from the chassis (see "Power off the node" on page 46 and "Remove a node from the chassis" on page 70).

c. If any power supply units are installed in the chassis, remove them (see "Remove a hot-swap power supply" on page 56).

Step 2. Loosen the captive screws on the front of the chassis.

Step 3. Carefully pull the chassis out of the rack; then, remove the chassis from the rails.

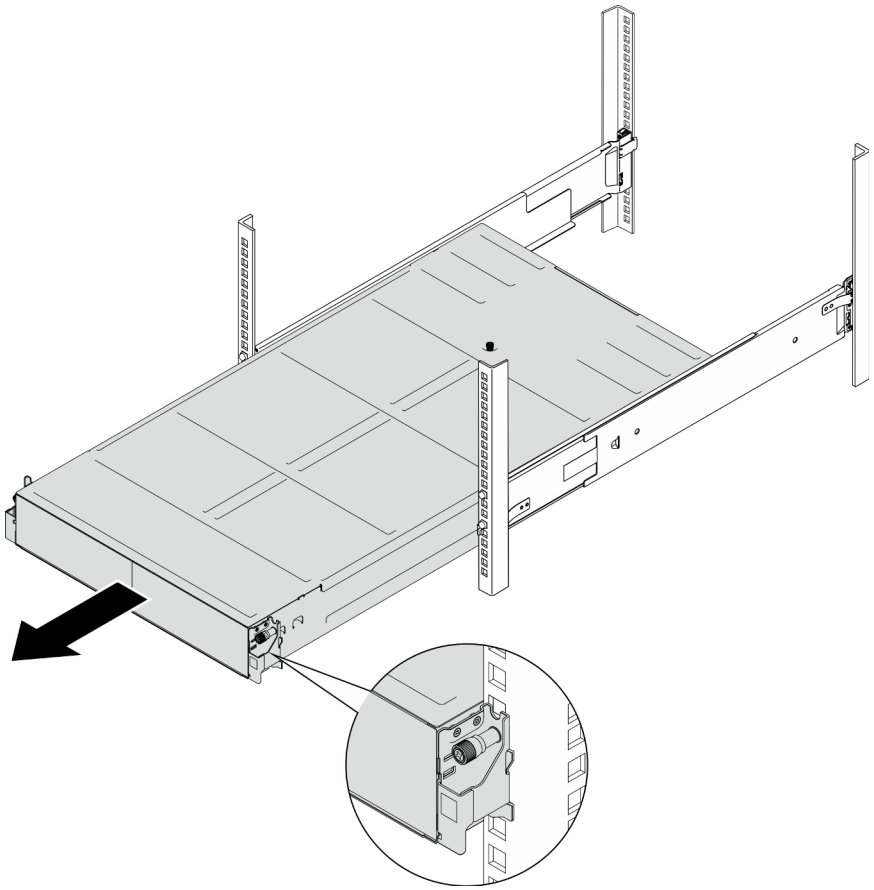

Figure 18. Chassis removal

Step 4. Carefully lay the chassis on a flat, static-protective surface.

After you finish

1. To remove the rails from the rack, follow the instructions below:

   https://pubs.lenovo.com/st650-v2/thinksystem_l_shaped_rail_kit.pdf

2. If you are instructed to return the component or optional device, follow all packaging instructions, and use any packaging materials for shipping that are supplied to you.

Demo video

https://www.youtube.com/watch?v=3yK2cjTXQeA

Install the chassis to the rack

Follow instructions in this section to install the chassis to the rack.

About this task

To avoid potential danger, make sure to read and follow the safety information.

R006

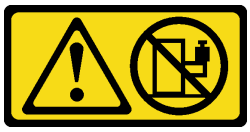

CAUTION:
Do not place any object on top of a rack-mounted device unless that rack-mounted device is intended for use as a shelf.

Attention:

- Read “Installation Guidelines” on page 39 and “Safety inspection checklist” on page 40 to make sure that you work safely.
- To install the rails into a rack, follow the instructions below:

  https://pubs.lenovo.com/st650-v2/thinksystem_l_shaped_rail_kit.pdf

  After the rails are installed successfully, complete the following steps to install the chassis to the rack.

CAUTION:
Use safe practices when lifting the chassis.

Procedure

Step 1. Make preparations for this task.

  a. If the EIA brackets are not installed to the front of the chassis yet, install them (see “Install the EIA brackets to the chassis” on page 55).

Step 2. Align the chassis with the rails; then, slide the chassis into the rack.

Step 3. Tighten the captive screws on the front to secure the chassis to the rack.

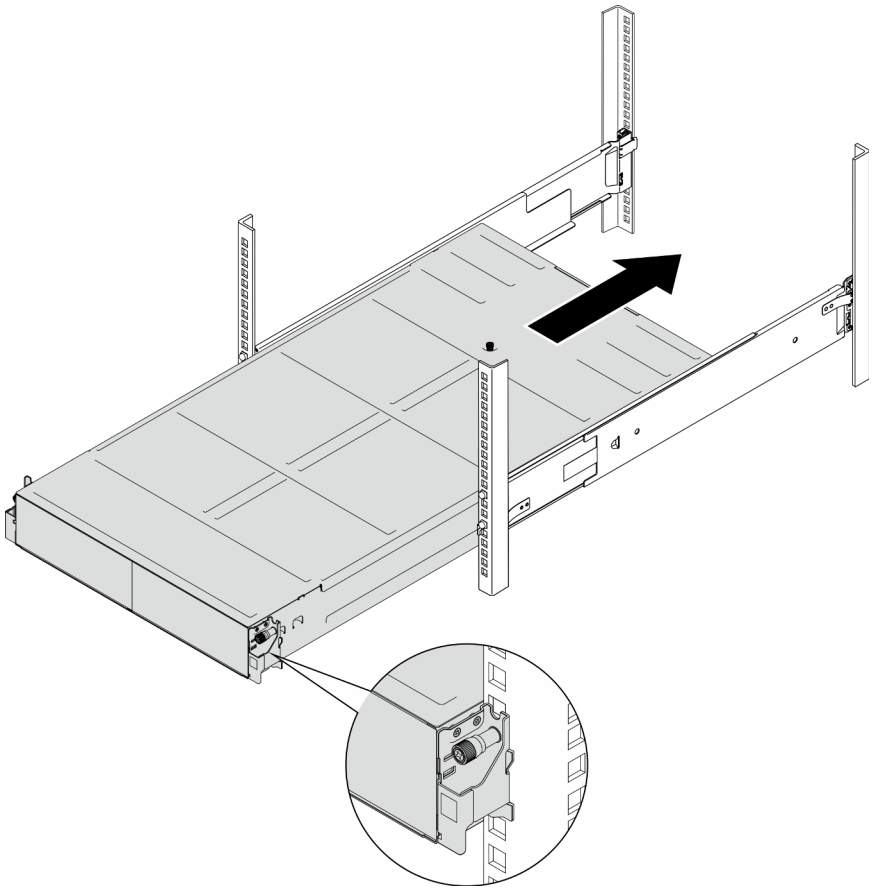

Figure 19. Chassis installation

After you finish

- Reinstall each PSU slot with a PSU or PSU filler (see “Install a hot-swap power supply” on page 58 and Installation of a PSU filler).
- Reinstall the nodes into the chassis (see “Install a node to the chassis” on page 74).
- Proceed to complete the parts replacement (see “Complete the parts replacement” on page 172).
- If the chassis is to be shipped in the cabinet, install shipping brackets on the rear to secure the chassis to the rack.

  Note: For reference, the torque required for the screws to be fully tightened/removed is 10.0+/- 0.5 lbf-in, 1.13+/- 0.05 N-M.

  Shipping brackets for 29-inch deep racks

  1. Align the shipping brackets with the guide holes on the rack and the chassis; then, insert the brackets and push it toward the front to engage the brackets in place.
  2. Tighten the screws to secure the shipping brackets to the chassis and the rack.

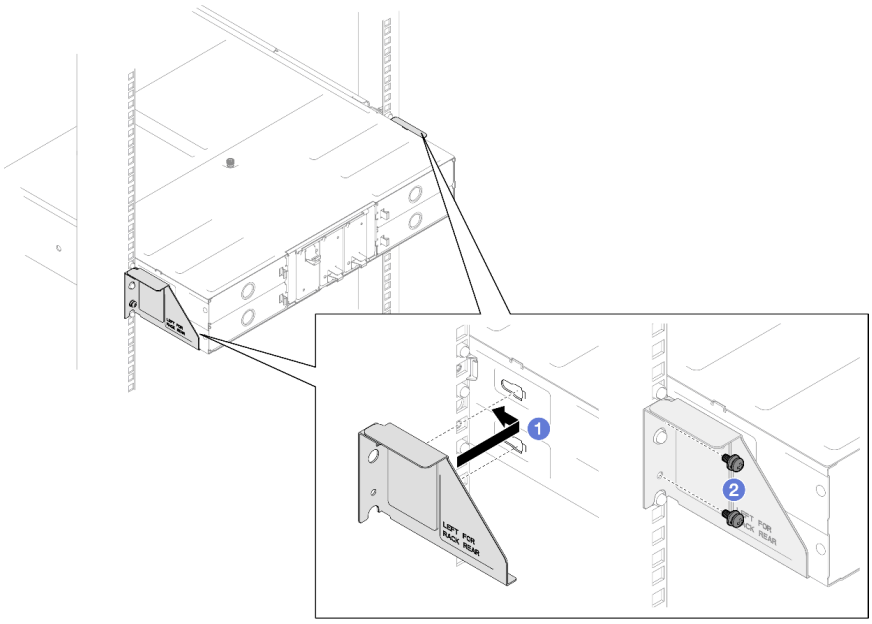

Figure 20. Installation of shipping brackets for 29-inch or 28.31-inch deep racks

Shipping brackets for 29.5-inch deep racks

1. ❶ Align the shipping brackets with the chassis; then, slide the brackets towards the rack post.
2. ❷ Tighten the screws to secure the shipping brackets to the rack post.

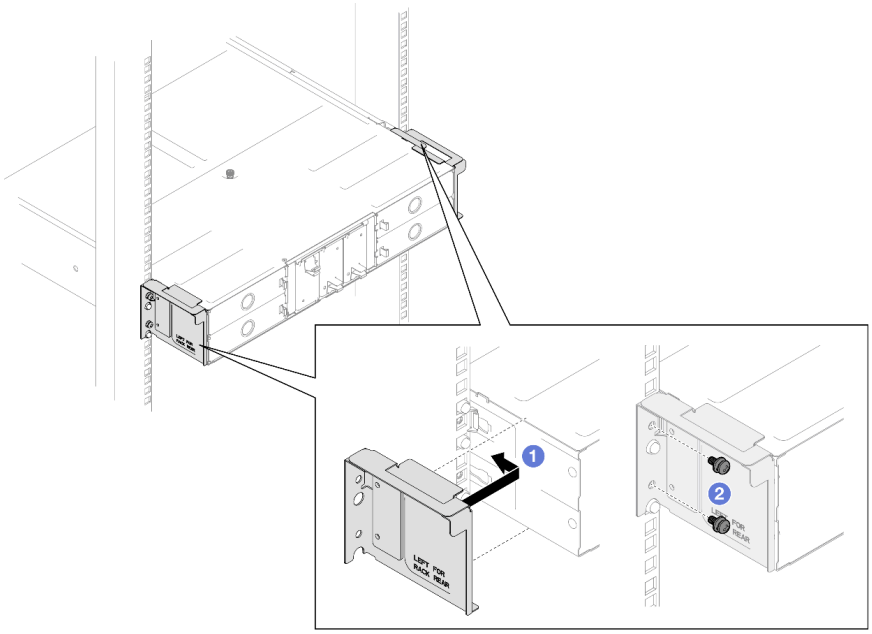

Figure 21. Installation of shipping brackets for 29.5-inch deep racks

Demo video

https://www.youtube.com/watch?v=aTAsdWTPUF0

Replace components in the chassis

Follow instructions in this section to remove or install components from or to the chassis.

EIA bracket replacement

Follow instructions in this section to remove or install the EIA brackets from or to the chassis.

Remove the EIA brackets from the chassis

Follow instructions in this section to remove the EIA brackets from the chassis.

About this task

To avoid potential danger, make sure to read and follow the safety information.

Attention:

- Read “Installation Guidelines” on page 39 and “Safety inspection checklist” on page 40 to make sure that you work safely.

Procedure

Step 1. Make preparations for this task.

a. Power off all the nodes (see “Power off the node” on page 46); then, disconnect all external cables from the nodes.

b. Remove all the nodes from the chassis (see “Remove a node from the chassis” on page 70).

c. Remove all power supply units and PSU fillers from the PSU cage (see “Remove a hot-swap power supply” on page 56 and Removal of a PSU filler).

d. Remove the chassis from the rack (see “Remove the chassis from the rack” on page 47); then, lay the chassis on a flat, static-protective surface.

Step 2. Remove the left and right EIA brackets from the chassis.

a. Remove the screws that secure the EIA brackets to the chassis.

b. Remove the EIA brackets from the chassis.

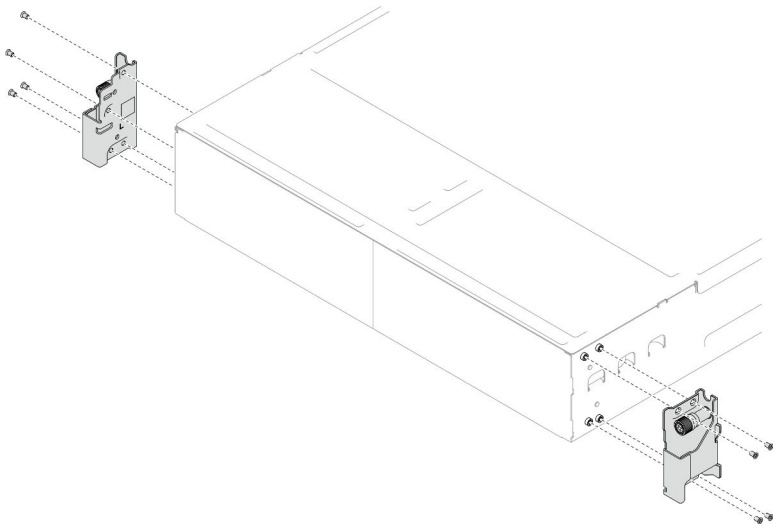

Figure 22. Removal of the EIA brackets

After you finish

1. Install a replacement unit (see “Install the EIA brackets to the chassis” on page 55).
2. If you are instructed to return the component or optional device, follow all packaging instructions, and use any packaging materials for shipping that are supplied to you.

Demo video

https://www.youtube.com/watch?v=3yK2cjTXQeA

Install the EIA brackets to the chassis

Follow instructions in this section to install the EIA brackets to the chassis.

About this task

To avoid potential danger, make sure to read and follow the safety information.

Attention:

- Read “Installation Guidelines” on page 39 and “Safety inspection checklist” on page 40 to make sure that you work safely.

Procedure

Step 1. Align the left EIA bracket with the screw holes on the left of the chassis; then, secure it to the chassis with the screws.

Step 2. Repeat the same step to secure the right EIA bracket to the right of the chassis.

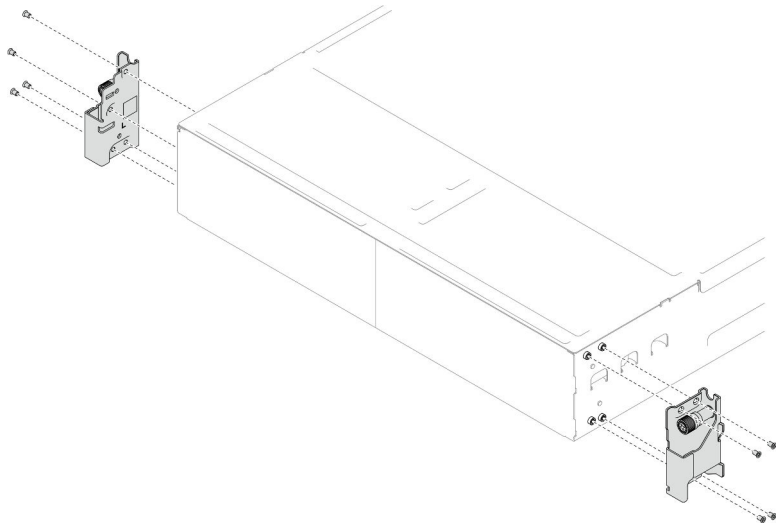

Figure 23. Installation of the EIA brackets

After you finish

- Install the chassis to the rack (see “Install the chassis to the rack” on page 50).
- Reinstall each PSU slot with a PSU or PSU filler (see “Install a hot-swap power supply” on page 58 and Installation of a PSU filler).
- Reinstall the nodes into the chassis (see “Install a node to the chassis” on page 74).
- Proceed to complete the parts replacement (see “Complete the parts replacement” on page 172).

Demo video

https://www.youtube.com/watch?v=aTAsdWTPUF0

Hot-swap power supply replacement

Follow instructions in this section to remove or install a hot-swap power supply unit (PSU).

Remove a hot-swap power supply

Follow instructions in this section to remove a power supply unit (PSU).

About this task

To avoid potential danger, make sure to read and follow the safety information.

S001



DANGER

Electrical current from power, telephone, and communication cables is hazardous.
To avoid a shock hazard:

- **Connect all power cords to a properly wired and grounded electrical outlet/source.**
- **Connect any equipment that will be attached to this product to properly wired outlets/sources.**
- **When possible, use one hand only to connect or disconnect signal cables.**
- **Never turn on any equipment when there is evidence of fire, water, or structural damage.**
- **The device might have more than one power cord, to remove all electrical current from the device, ensure that all power cords are disconnected from the power source.**

S002

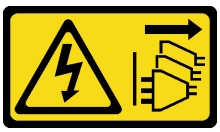

CAUTION:
The power-control button on the device and the power switch on the power supply do not turn off the electrical current supplied to the device. The device also might have more than one power cord. To remove all electrical current from the device, ensure that all power cords are disconnected from the power source.

S035

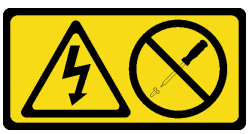

CAUTION:
Never remove the cover on a power supply or any part that has this label attached. Hazardous voltage, current, and energy levels are present inside any component that has this label attached. There are no serviceable parts inside these components. If you suspect a problem with one of these parts, contact a service technician.

Attention:

- Read "Installation Guidelines" on page 39 and "Safety inspection checklist" on page 40 to make sure that you work safely.
- If only one hot-swap power supply is installed in the chassis, the installed nodes must be turned off before the power supply is to be removed.

Procedure

Step 1. Untie the Velcro strap and disconnect the power cord from the power supply unit.

Step 2. Remove the power supply unit.

a. ❶ Press and hold on the release tab of the power supply unit.

b. ❷ Hold the handle and pull the power supply unit out of the slot.

Note: PSU with a release tab is a hot-swap PSU. The color of the release tab does not affect the serviceability of the PSU.

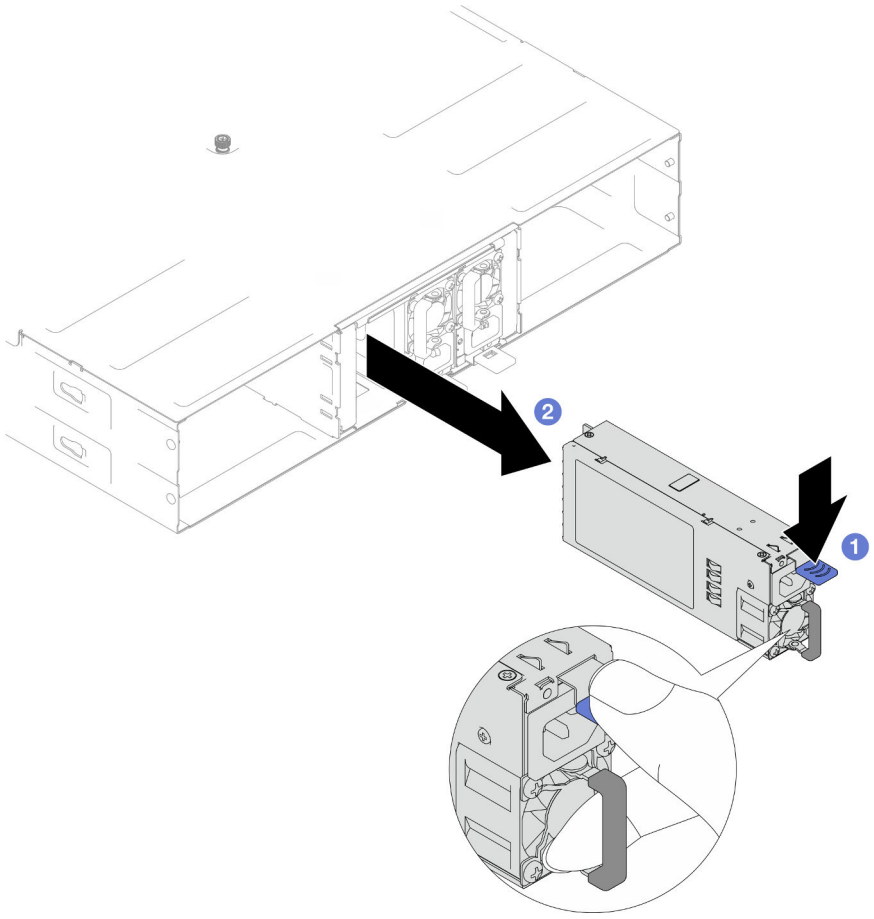

Figure 24. Removal of a hot-swap PSU

After you finish

1. Install a replacement unit or filler (see “Install a hot-swap power supply” on page 58) .

   Important:

   - A removed hot-swap power supply must be replaced by another power supply unit or a PSU filler within two minutes after removal.
   - For PSU slots 2 and 3, the PSU filler must be installed with the tab downward. For PSU slot 1, the filler must be installed with the tab upward.

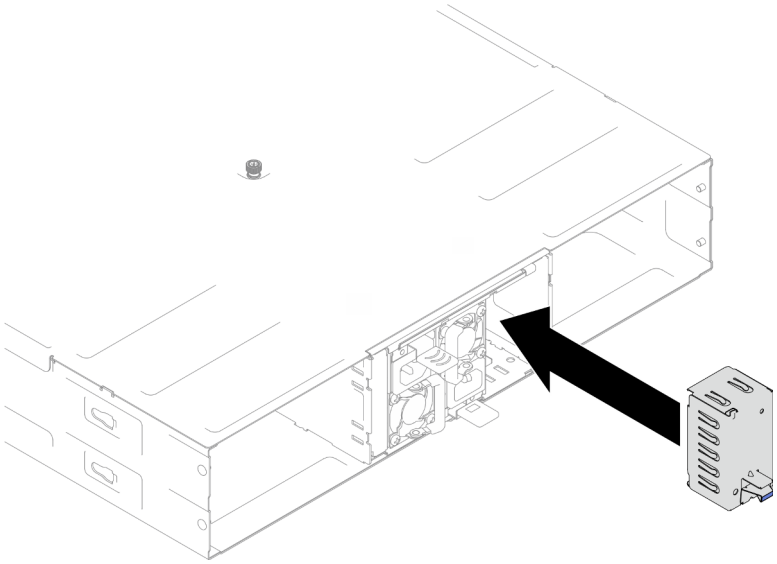

Figure 25. Installation of a PSU filler

2. If you are instructed to return the component or optional device, follow all packaging instructions, and use any packaging materials for shipping that are supplied to you.

Demo video

https://www.youtube.com/watch?v=Veu_2a1x79g

Install a hot-swap power supply

Follow instructions in this section to install a power supply unit (PSU).

About this task

To avoid potential danger, make sure to read and follow the safety information.

S001



DANGER

Electrical current from power, telephone, and communication cables is hazardous.
To avoid a shock hazard:

- **Connect all power cords to a properly wired and grounded electrical outlet/source.**
- **Connect any equipment that will be attached to this product to properly wired outlets/sources.**
- **When possible, use one hand only to connect or disconnect signal cables.**
- **Never turn on any equipment when there is evidence of fire, water, or structural damage.**
- **The device might have more than one power cord, to remove all electrical current from the device, ensure that all power cords are disconnected from the power source.**

S035

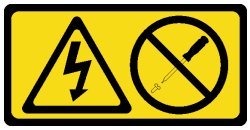

CAUTION:
Never remove the cover on a power supply or any part that has this label attached. Hazardous voltage, current, and energy levels are present inside any component that has this label attached. There are no serviceable parts inside these components. If you suspect a problem with one of these parts, contact a service technician.

CAUTION:



High touch current. Connect to earth before connecting to supply.

Attention:

- Read “Installation Guidelines” on page 39 and “Safety inspection checklist” on page 40 to make sure that you work safely.
- The following notes describe the type of power supply that the chassis supports and other information that you must consider when installing a power supply:
  - For redundancy support, an additional hot-swap power supply must be installed, if one is not installed in the chassis.
  - Make sure that the devices that you are installing are supported. For a list of supported optional devices for the chassis, see https://serverproven.lenovo.com.

Procedure

Step 1. Make preparations for this task.

a. Make sure that the power supply unit to be installed is the same as the installed ones. Otherwise, remove all existing power supply units and replace them all with the same power supply units.

Notes:

- Power supply units in the chassis must have the same wattage, vendor, and part number (or alternate part number).
- PSU with a release tab is a hot-swap PSU. The color of the release tab does not affect the serviceability of the PSU.

b. If a PSU filler is installed in the PSU slot, remove it.
   1. (1) Press and hold the tab on the PSU filler.
   2. (2) Pull the filler out of the PSU slot.

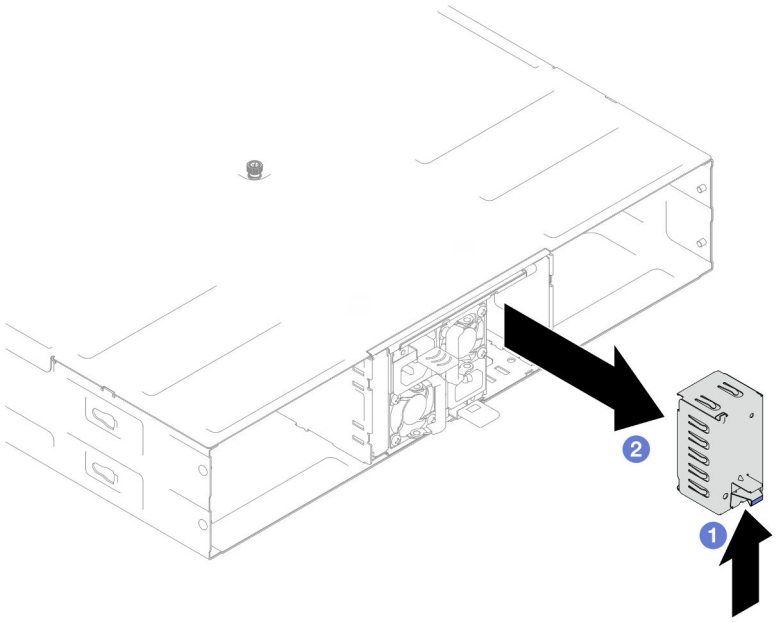

Figure 26. Removal of a PSU filler

c. If more than one power supply units are to be installed, start with the lowest available PSU slot number.

Step 2. Insert the hot-swap power supply into the slot until the release tab clicks into place.

Important:

- During normal operation, each power-supply slot must contain either a power supply or power-supply filler for proper cooling.
- Make sure to follow the instruction on the guiding label in each slot. For slot 1, the power supply unit must be installed with the fan downward; for slots 2 and 3, the power supply units must be installed with the fan upward.
- After docking the power supply, hold the handle and slightly pull the power supply to make sure that it is securely engaged and cannot be pulled out.

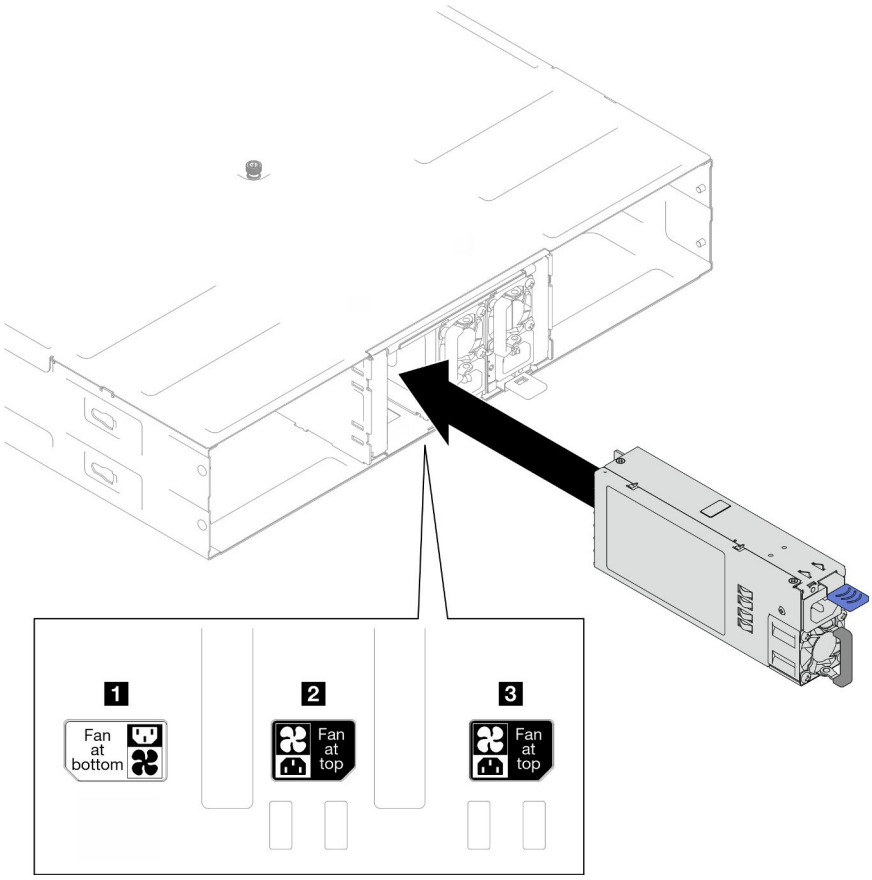

Figure 27. Installation of a hot-swap power supply

Step 3. Connect one end of the power cord to the AC connector on the back of the new power supply; then, connect the other end of the power cord to a properly grounded electrical outlet.

Step 4. Make sure the power supply unit handle is perpendicular to the power supply unit; then, tie the power cord to the handle with the pre-attached strap as shown below.

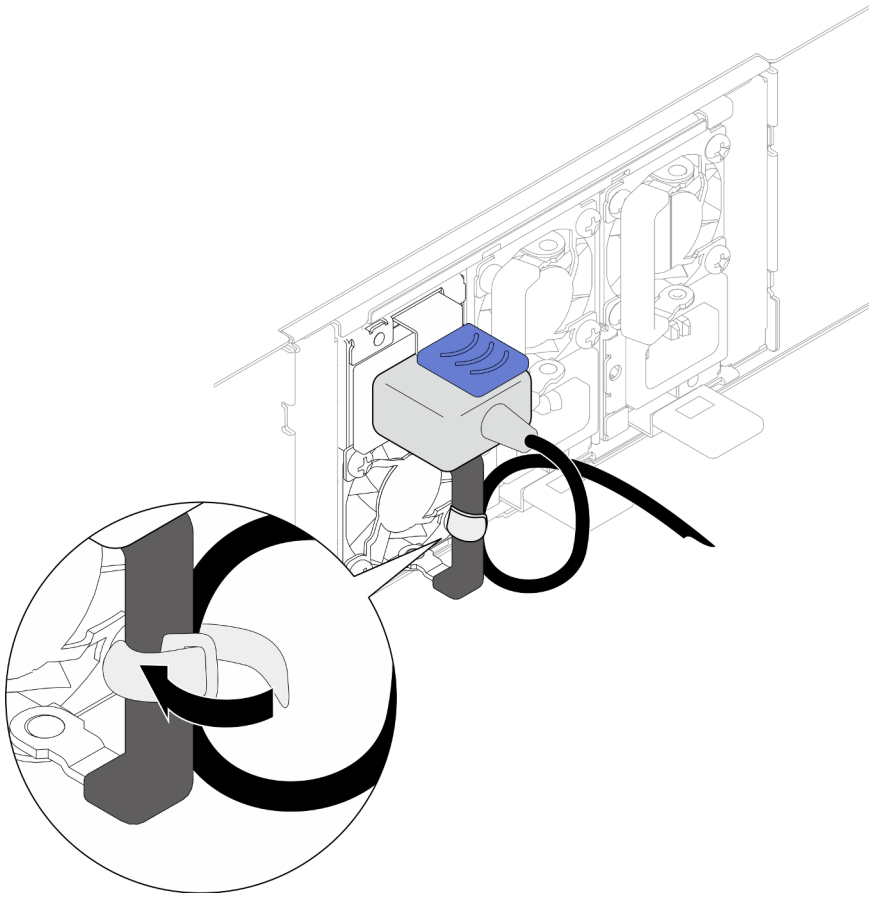

Figure 28. Routing and tying power cord

After you finish

Make sure that the power LED on the power supply is lit, indicating that the power supply is operating correctly.

Demo video

https://www.youtube.com/watch?v=uPvhuBCt8mw

PSU cage and chassis midplane replacement

Follow instructions in this section to remove or install the PSU cage and the chassis midplane.

Remove the PSU cage

Follow instructions in this section to remove the PSU cage.

About this task

To avoid potential danger, make sure to read and follow the safety information.

S001



DANGER

Electrical current from power, telephone, and communication cables is hazardous.
To avoid a shock hazard:

- **Connect all power cords to a properly wired and grounded electrical outlet/source.**
- **Connect any equipment that will be attached to this product to properly wired outlets/sources.**
- **When possible, use one hand only to connect or disconnect signal cables.**
- **Never turn on any equipment when there is evidence of fire, water, or structural damage.**
- **The device might have more than one power cord, to remove all electrical current from the device, ensure that all power cords are disconnected from the power source.**

S002



CAUTION:
The power-control button on the device and the power switch on the power supply do not turn off the electrical current supplied to the device. The device also might have more than one power cord. To remove all electrical current from the device, ensure that all power cords are disconnected from the power source.

S035

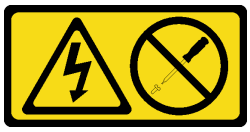

CAUTION:
Never remove the cover on a power supply or any part that has this label attached. Hazardous voltage, current, and energy levels are present inside any component that has this label attached. There are no serviceable parts inside these components. If you suspect a problem with one of these parts, contact a service technician.

CAUTION:



High touch current. Connect to earth before connecting to supply.

Attention:

- Read “Installation Guidelines” on page 39 and “Safety inspection checklist” on page 40 to make sure that you work safely.

Procedure

Step 1. Make preparations for this task.

a. Power off all the nodes (see “Power off the node” on page 46); then, disconnect all external cables from the nodes.

b. Remove all the nodes from the chassis (see “Remove a node from the chassis” on page 70).

c. Remove all power supply units and PSU fillers from the PSU cage (see “Remove a hot-swap power supply” on page 56 and Removal of a PSU filler).

d. Remove the chassis from the rack (see “Remove the chassis from the rack” on page 47); then, lay the chassis on a flat, static-protective surface.

Step 2. Remove the PSU cage from the chassis.

a. Loosen the thumbscrew located on the top of the chassis.

b. Hold the vertical partitions between the PSU slots; then, pull the PSU cage out of the chassis.

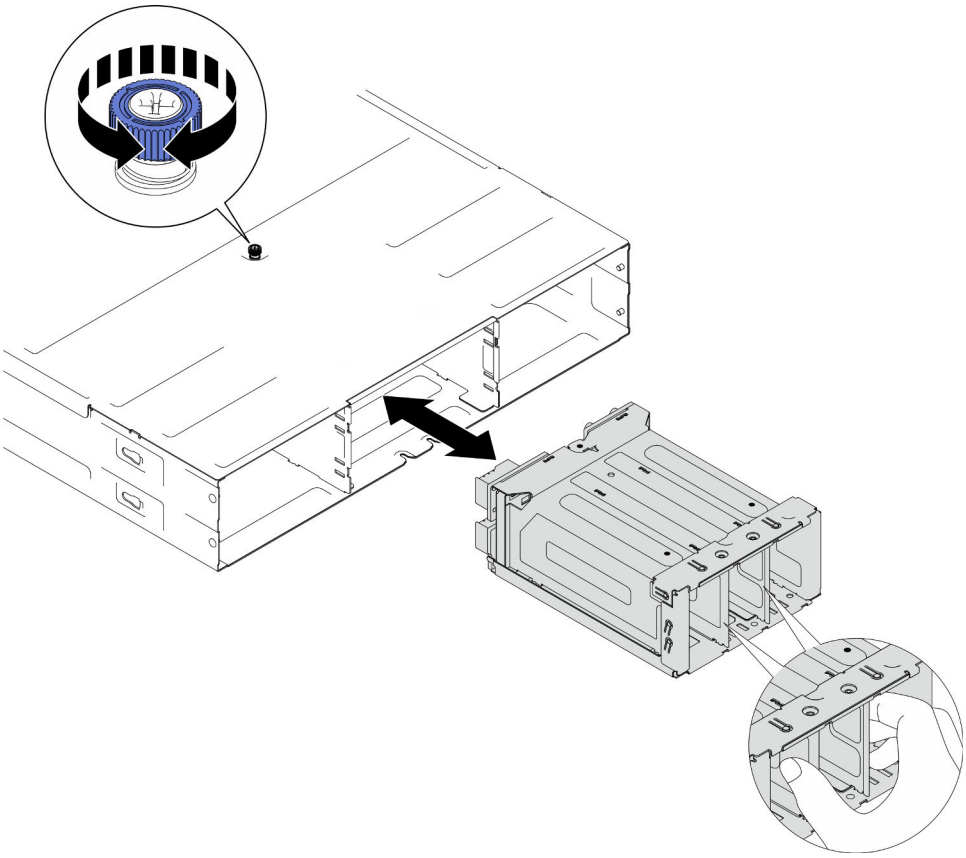

Figure 29. Removal of the PSU cage

Step 3. Carefully lay the PSU cage on a flat, static-protective surface.

After you finish

1. Install a replacement unit (see “Install a PSU cage” on page 68).

2. If you are instructed to return the component or optional device, follow all packaging instructions, and use any packaging materials for shipping that are supplied to you.

Demo video

https://www.youtube.com/watch?v=fpsEcN_KA4Q

Remove the chassis midplane

Follow instructions in this section to remove the chassis midplane.

About this task

To avoid potential danger, make sure to read and follow the safety information.

S002

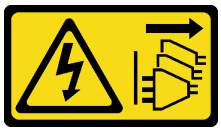

CAUTION:
The power-control button on the device and the power switch on the power supply do not turn off the electrical current supplied to the device. The device also might have more than one power cord. To remove all electrical current from the device, ensure that all power cords are disconnected from the power source.

Attention:

- Read “Installation Guidelines” on page 39 and “Safety inspection checklist” on page 40 to make sure that you work safely.
- Power off all the nodes in the chassis; then, disconnect all the power cords from the installed power supply units.

Procedure

Step 1. Make preparations for this task.

a. Power off all the nodes (see “Power off the node” on page 46); then, disconnect all external cables from the nodes.

b. Remove all the nodes from the chassis (see “Remove a node from the chassis” on page 70).

c. Remove all power supply units and PSU fillers from the PSU cage (see “Remove a hot-swap power supply” on page 56 and Removal of a PSU filler).

d. Remove the chassis from the rack (see “Remove the chassis from the rack” on page 47); then, lay the chassis on a flat, static-protective surface.

e. Remove the PSU cage from the chassis (see “Remove the PSU cage” on page 62); then, carefully lay the PSU cage on a flat, static-protective surface, orienting the midplane upward.

Step 2. Loosen the six screws that secure the chassis midplane to the PSU cage.

Step 3. Lift the chassis midplane away from the PSU cage.

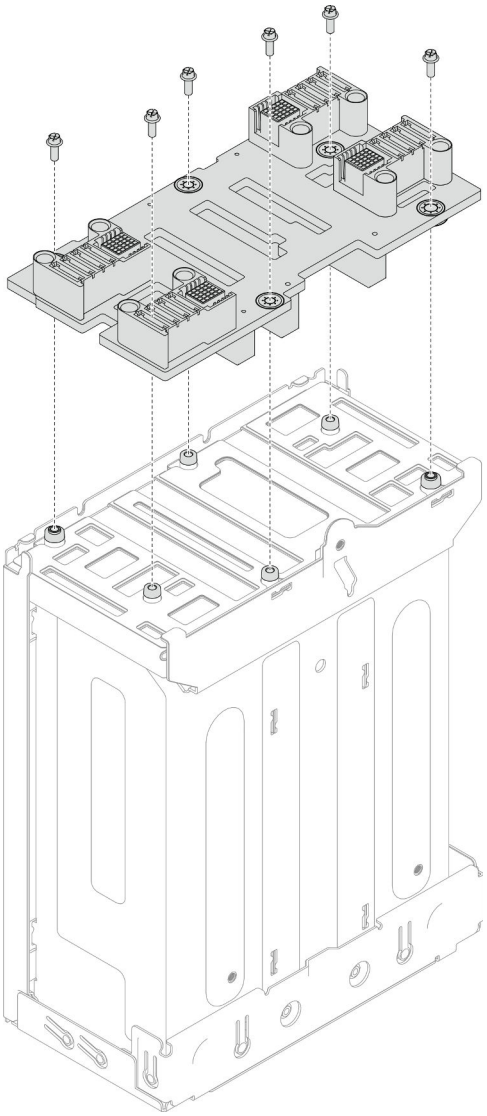

Figure 30. Removal of the chassis midplane

After you finish

1. Install a replacement unit (see “Install the chassis midplane” on page 66).
2. If you are instructed to return the component or optional device, follow all packaging instructions, and use any packaging materials for shipping that are supplied to you.

Demo video

https://www.youtube.com/watch?v=tI88mbxQAgk

Install the chassis midplane

Follow instructions in this section to install the chassis midplane.

About this task

To avoid potential danger, make sure to read and follow the safety information.

S002



CAUTION:
The power-control button on the device and the power switch on the power supply do not turn off the electrical current supplied to the device. The device also might have more than one power cord. To remove all electrical current from the device, ensure that all power cords are disconnected from the power source.

Attention:

- Read “Installation Guidelines” on page 39 and “Safety inspection checklist” on page 40 to make sure that you work safely.
- Prevent exposure to static electricity, which might lead to system halt and loss of data, by keeping static-sensitive components in their static-protective packages until installation, and handling these devices with an electrostatic-discharge wrist strap or other grounding system.

Notes:

- The firmware of the chassis midplane can be updated via Lenovo XClarity Controller (XCC) and Lenovo XClarity Essentials OneCLI (LXCE OneCLI). **Only the caretaker node can perform this update**.
- By default, the **caretaker node** is automatically selected by the PSoC firmware on the chassis midplane. To change the chassis caretaker preference, see https://pubs.lenovo.com/xcc2/NN1ia_c_d3_chassis.
- Go to “Update the firmware” on page 189 for more information on firmware updating tools.

Procedure

Step 1. Align the chassis midplane with the screw holes and edges of the PSU cage; then, place the midplane onto the PSU cage.

Step 2. Tighten the six screws to secure the chassis midplane to the PSU cage.

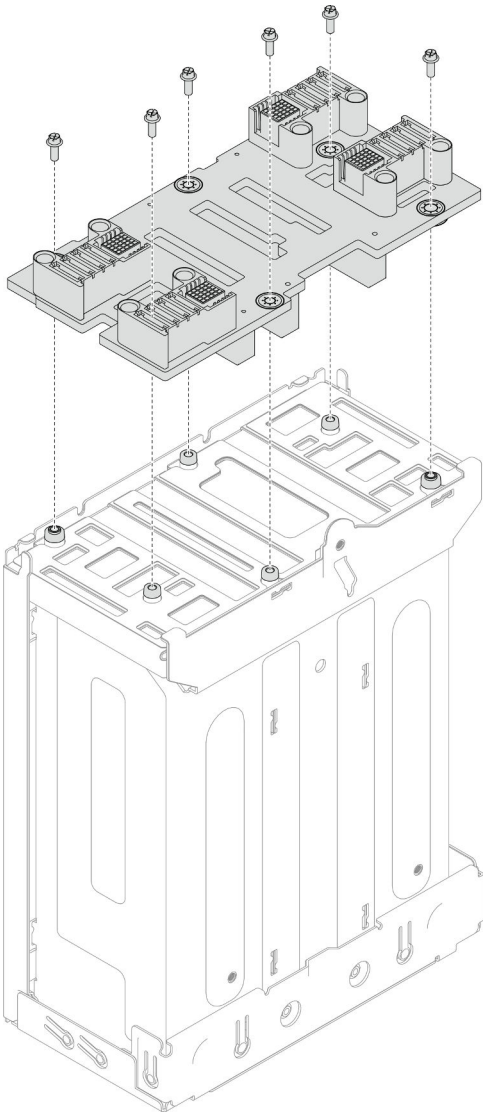

Figure 31. Installation of the chassis midplane

After you finish

1. Reinstall the PSU cage to the chassis (see “Install a PSU cage” on page 68).
2. Install the chassis to the rack (see “Install the chassis to the rack” on page 50).
3. Reinstall the nodes into the chassis (see “Install a node to the chassis” on page 74).
4. Reinstall each PSU slot with a PSU or PSU filler (see “Install a hot-swap power supply” on page 58 and Installation of a PSU filler).
5. Proceed to complete the parts replacement (see “Complete the parts replacement” on page 172).

Demo video

https://www.youtube.com/watch?v=gElqsboo8os

Install a PSU cage

Follow instructions in this section to install a PSU cage.

About this task

To avoid potential danger, make sure to read and follow the safety information.

S001



DANGER

Electrical current from power, telephone, and communication cables is hazardous.
To avoid a shock hazard:

- **Connect all power cords to a properly wired and grounded electrical outlet/source.**
- **Connect any equipment that will be attached to this product to properly wired outlets/sources.**
- **When possible, use one hand only to connect or disconnect signal cables.**
- **Never turn on any equipment when there is evidence of fire, water, or structural damage.**
- **The device might have more than one power cord, to remove all electrical current from the device, ensure that all power cords are disconnected from the power source.**

S035

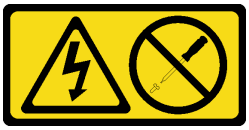

CAUTION:
Never remove the cover on a power supply or any part that has this label attached. Hazardous voltage, current, and energy levels are present inside any component that has this label attached. There are no serviceable parts inside these components. If you suspect a problem with one of these parts, contact a service technician.

CAUTION:



High touch current. Connect to earth before connecting to supply.

Attention:

- Read “Installation Guidelines” on page 39 and “Safety inspection checklist” on page 40 to make sure that you work safely.
- Prevent exposure to static electricity, which might lead to system halt and loss of data, by keeping static-sensitive components in their static-protective packages until installation, and handling these devices with an electrostatic-discharge wrist strap or other grounding system.

Procedure

Step 1. Insert the PSU cage into the chassis until it stops.

Step 2. Tighten the thumbscrew located on the top of the chassis.

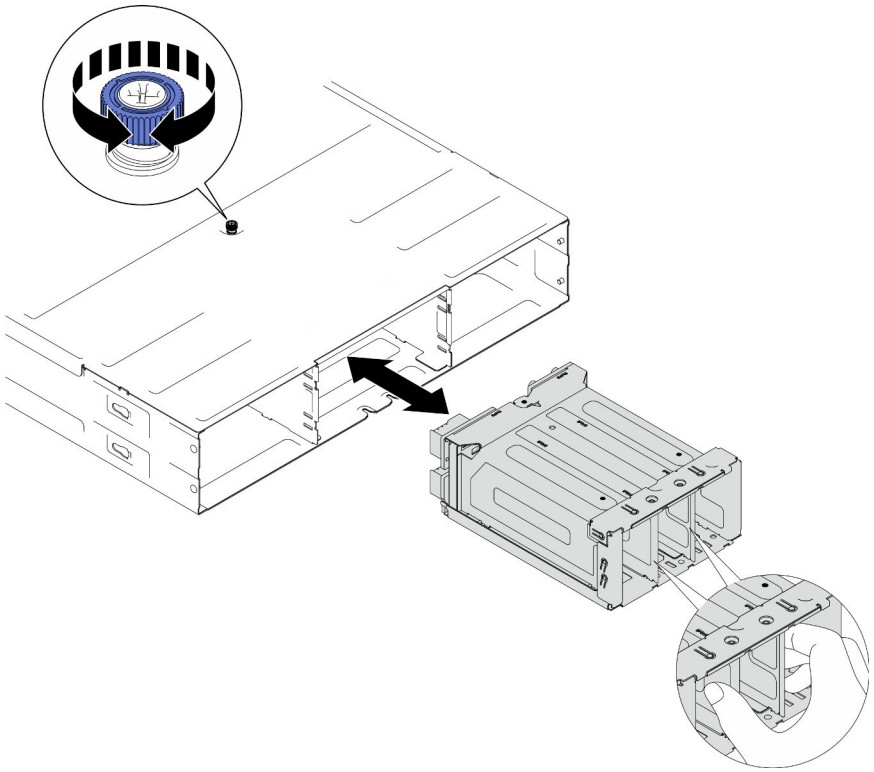

Figure 32. Installation of the PSU cage

After you finish

1. Install the chassis to the rack (see “Install the chassis to the rack” on page 50).
2. Reinstall the nodes into the chassis (see “Install a node to the chassis” on page 74).
3. Reinstall each PSU slot with a PSU or PSU filler (see “Install a hot-swap power supply” on page 58 and Installation of a PSU filler).
4. Proceed to complete the parts replacement (see “Complete the parts replacement” on page 172).

Demo video

https://www.youtube.com/watch?v=RXenXuPc-JA

Node component replacement

Follow instructions in this section to remove or install the node components.

Node replacement

Follow instructions in this section to remove or install a node from or to the chassis.

Remove a node from the chassis

Follow instructions in this section to remove a node from the chassis.

About this task

To avoid potential danger, make sure to read and follow the safety information.

R006

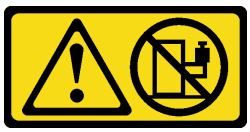

CAUTION:
Do not place any object on top of a rack-mounted device unless that rack-mounted device is intended for use as a shelf.

Attention:

- Read "Installation Guidelines" on page 39 and "Safety inspection checklist" on page 40 to make sure that you work safely.
- When removing the node, note the node tray number and make sure to install the node in the same tray from which it was removed. Reinstalling the node into a different tray requires the node to be reconfigured.
- Be careful when removing or installing the node to avoid damaging the node connectors.
- For proper cooling, each node tray must be installed with either a node or node tray fillers before the nodes in the chassis are powered on.

Note: Depending on the specific configuration, the hardware might look slightly different from the illustrations in this section.

Procedure

Step 1. Make preparations for this task.

a. Power off the node (see "Power off the node" on page 46); then, disconnect all external cables from the node.

Step 2. Remove the node from the chassis.

a. ❶ Pivot and release the front handle of the node.

b. ❷ Carefully slide the node out of the chassis until you see the warning icon on the side label of the node. Then, hold the node with both hands as illustrated and carefully pull it out of the chassis.

Attention: For safety, make sure to hold the node with both hands when lifting the node.

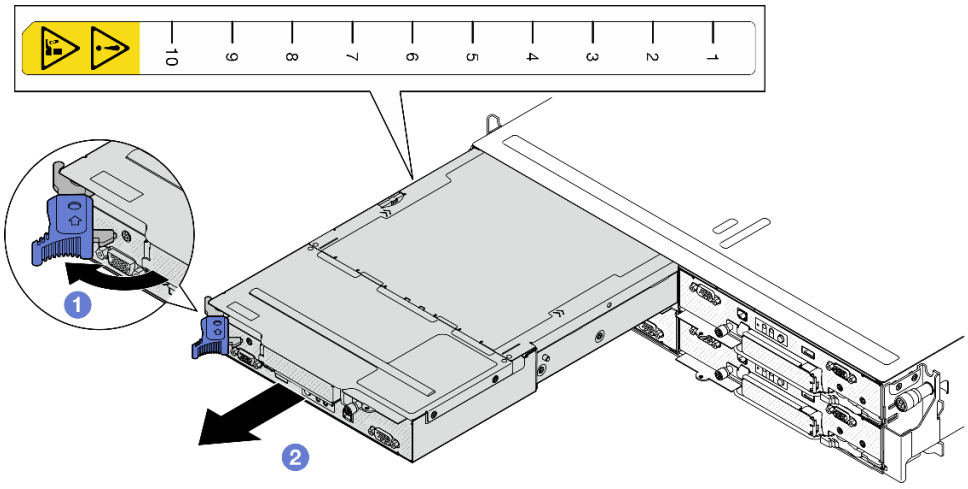

Figure 33. Node removal from a left tray

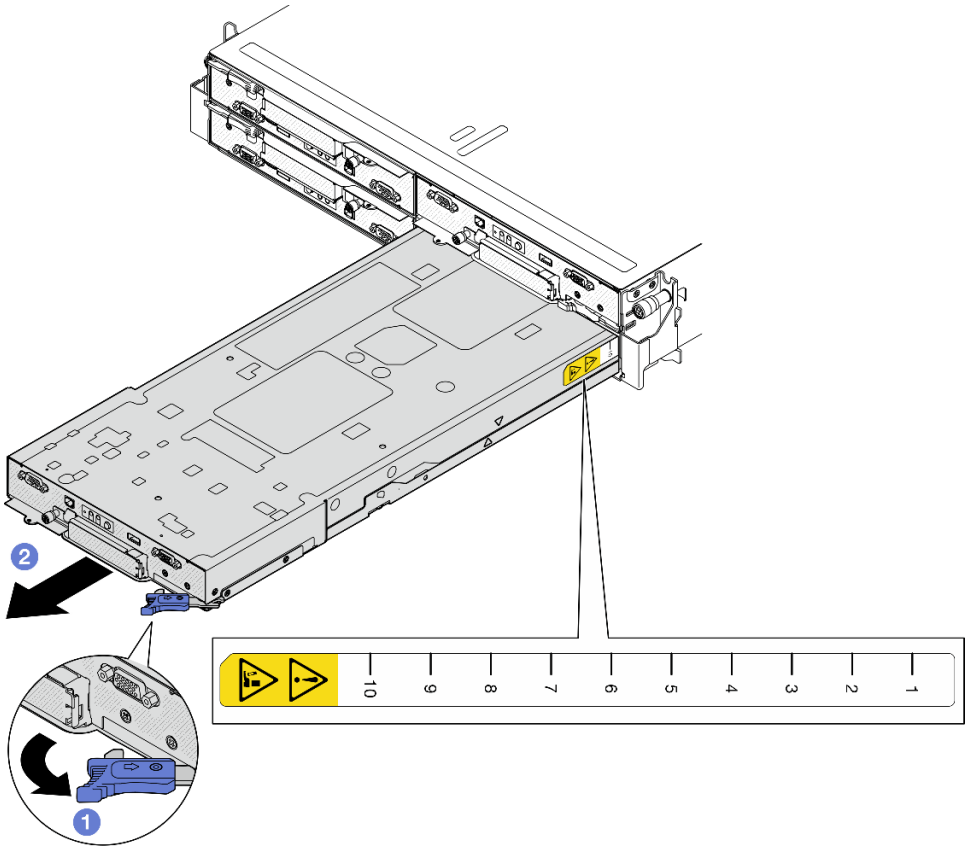

Figure 34. Node removal from a right tray

After you finish

1. Install either a replacement node (see “Install a node to the chassis” on page 74) or front and rear node tray fillers into the node tray within one minute.

   Important: For proper cooling, each node tray must be installed with either a node or node tray fillers before the nodes in the chassis are powered on.

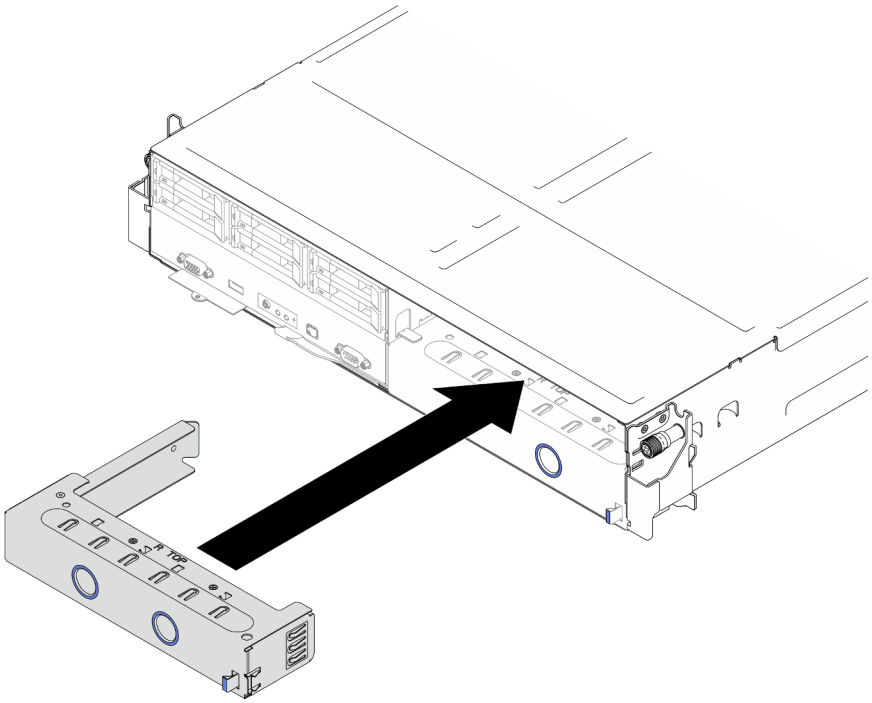

Figure 35. Installation of a front node tray filler

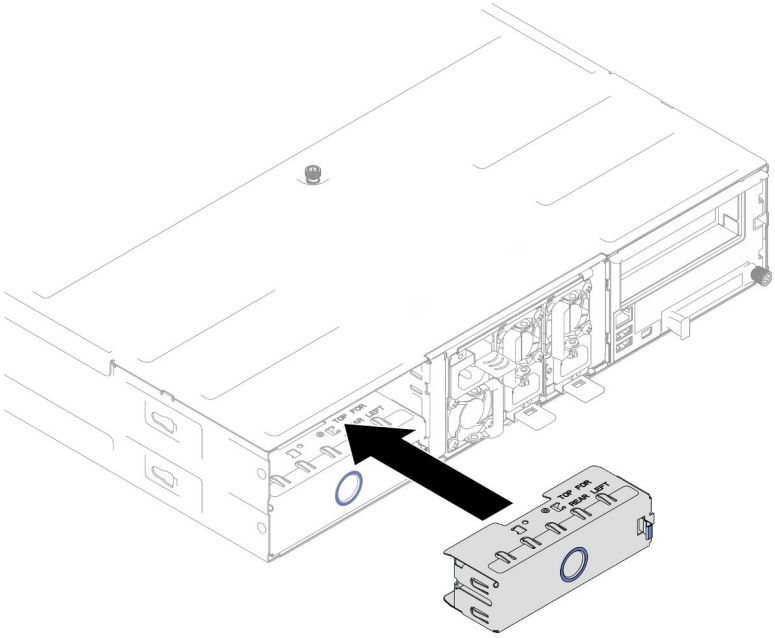

Figure 36. Installation of a rear node tray filler

2. If you are instructed to return the component or optional device, follow all packaging instructions, and use any packaging materials for shipping that are supplied to you.

Demo video

https://www.youtube.com/watch?v=BRbHlhlF1Jo

Install a node to the chassis

Follow instructions in this section to install a node into the chassis.

About this task

To avoid potential danger, make sure to read and follow the safety information.

R006



CAUTION:
Do not place any object on top of a rack-mounted device unless that rack-mounted device is intended for use as a shelf.

Attention:

- Read “Installation Guidelines” on page 39 and “Safety inspection checklist” on page 40 to make sure that you work safely.
- Be careful when removing or installing the node to avoid damaging the node connectors.
- When removing the node, note the node tray number and make sure to install the node in the same tray from which it was removed. Reinstalling the node into a different tray requires the node to be reconfigured.
- The time required for a node to initialize varies by system configurations. The power LED flashes rapidly; the power button on the node will not respond until the power LED flashes slowly, indicating that the initialization process is complete.
- For proper cooling, each node tray must be installed with either a node or node tray fillers before the nodes in the chassis are powered on.

Note: Depending on the specific configuration, the hardware might look slightly different from the illustrations in this section.

Procedure

Step 1. If node tray fillers are installed, remove them from the chassis.

1. ❶ Press and hold on the latch of the filler.
2. ❷ Pull the filler out of the node tray.

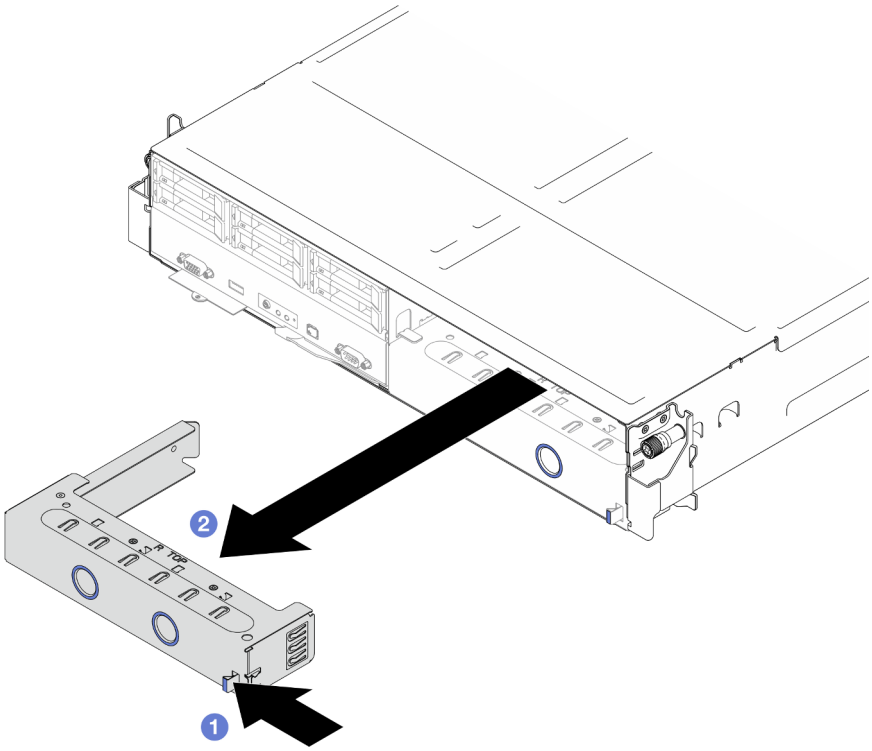

Figure 37. Removal of a front node tray filler

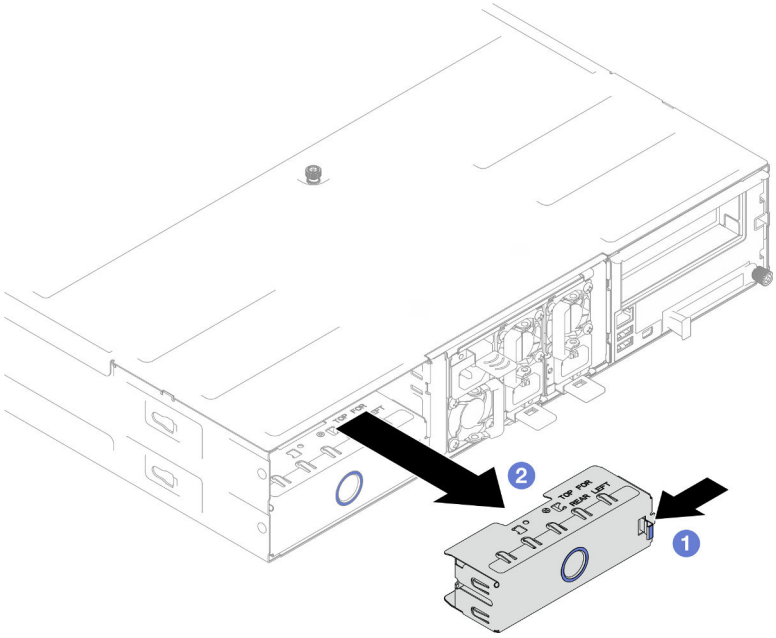

Figure 38. Removal of a rear node tray filler

Step 2. Install the node into the chassis.

a. ❶ Make sure that the front handle on the node is in the fully open position; then, slide the node into the node tray until it stops.

b. ❷ Pivot the front handle to the fully closed position until the handle latch clicks.

Attention:

- For safety, make sure to hold the node with both hands when lifting the node.
- To avoid damage to the chassis midplane,
  - In the left tray (seen from the front), the node must be installed right-side up.
  - In the right tray (seen from the front), the node must be installed upside down.

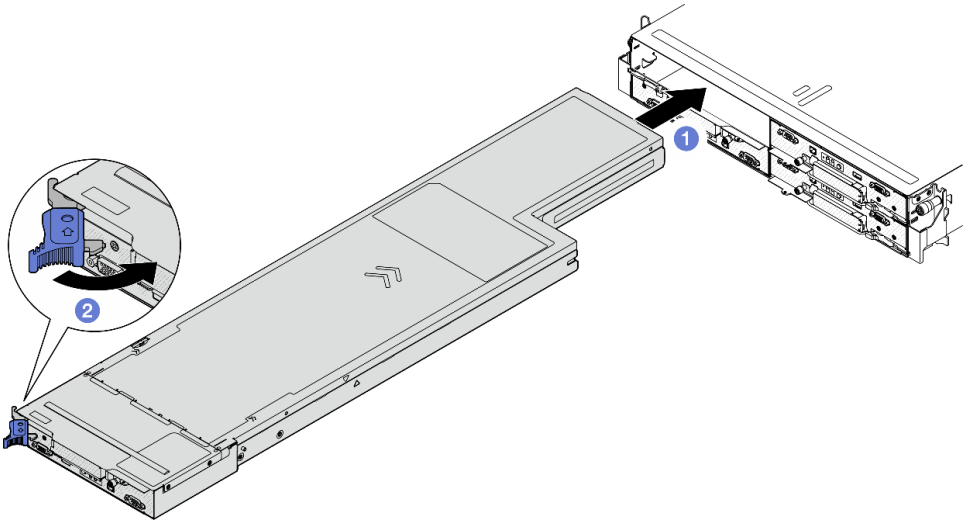

Figure 39. Node installation to a left tray

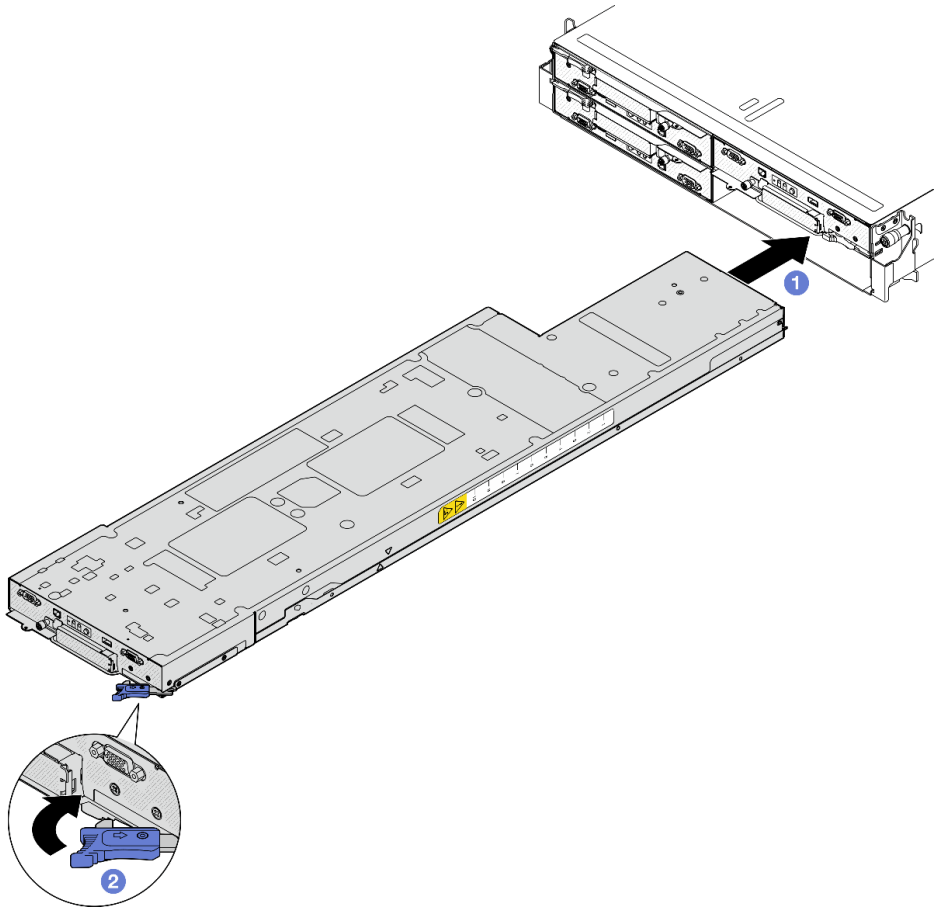

Figure 40. Node installation to a right tray

Step 3. If there is another node or node tray fillers to install, install them now.

Important: For proper cooling, each node tray must be installed with either a node or node tray fillers before the nodes in the chassis are powered on.

After you finish

1. Make sure that the required power supply units are installed and power cords are connected; then, power on the node (see “Install a hot-swap power supply” on page 58 and “Power on the node” on page 46).
2. Check the power LED to make sure it transitions between fast blink and slow blink to indicate the node is ready to be powered on; then, power on the node.
3. Make sure that the power LED is lit continuously, indicating that the node is receiving power and is turned on.
4. If this is the initial installation of the node into the chassis, you must configure the node through the Lenovo XClarity Provisioning Manager and install the node operating system (see https://pubs.lenovo.com/lxpm-overview/).
5. If the node access over local console is not available, refer to the following sections in the XCC documentation compatible with your node at https://pubs.lenovo.com/lxcc-overview/.
   a. Access Lenovo XClarity Controller web interface (see “Accessing the XClarity Controller web interface” section).

b. Set up Lenovo XClarity Controller network connection through Lenovo XClarity Provisioning Manager (see “Setting up the XClarity Controller network connection through the XClarity Provisioning Manager” section).
c. Log in to Lenovo XClarity Controller (see “Logging in to the XClarity Controller” section).

6. If you have changed the configuration of the node, or if you are installing a different node from the one that you removed, make sure to configure the node through the Setup utility, and you might have to install the node operating system. For more details, see Chapter 7 “System configuration” on page 187.
7. You can place the identifying information on the pull-out label tab that are accessible on the front of the node (see “Identify the system and access the Lenovo XClarity Controller” on page 33).

Demo video

https://www.youtube.com/watch?v=BfdiutmetaA

CMOS battery (CR2032) replacement

Follow instructions in this section to remove or install the CMOS battery (CR2032).

Remove the CMOS battery (CR2032)

Follow instructions in this section to remove the CMOS battery (CR2032).

About this task

To avoid potential danger, make sure to read and follow the safety information.

S004



CAUTION:
When replacing the lithium battery, use only Lenovo specified part number or an equivalent type of battery recommended by the manufacturer. If your system has a module containing a lithium battery, replace it only with the same module type made by the same manufacturer. The battery contains lithium and can explode if not properly used, handled, or disposed of.

Do not:

- **Throw or immerse into water**
- **Heat to more than 100°C (212°F)**
- **Repair or disassemble**

Dispose of the battery as required by local ordinances or regulations.

S005



CAUTION:

The battery is a lithium ion battery. To avoid possible explosion, do not burn the battery. Exchange it only with the approved part. Recycle or discard the battery as instructed by local regulations.

Attention:

- Read “Installation Guidelines” on page 39 and “Safety inspection checklist” on page 40 to make sure that you work safely.
- Make sure to read the following notes carefully before replacing the CMOS battery in the node.
  - Do not make CMOS battery in contact with any metal surface during the replacement. Any contact with a metal surface, such as the node and chassis side, can cause damages to the battery.
  - When replacing the battery, you must replace it with another CMOS battery of the exact same type (CR2032) made by the same manufacturer.
  - After replacing the battery, make sure to reconfigure the node and reset the system date and time.
  - Dispose of the battery as required by local ordinances or regulations.

Procedure

Step 1. Make preparations for this task.

a. Power off the node (see “Power off the node” on page 46); then, disconnect all external cables from the node.

b. Remove the node from the chassis (see “Remove a node from the chassis” on page 70); then, carefully lay the node on a flat, static-protective surface, orienting the node with the front toward you.

Notes:

- When removing the node, note the node tray number and make sure to install the node in the same tray from which it was removed. Reinstalling the node into a different tray requires the node to be reconfigured.
- For safety, make sure to hold the node with both hands when lifting the node.

c. Remove the top cover (see “Remove the top cover” on page 169).

d. Disconnect all the cables from the drive backplane; then, remove the drive cage assembly from the node and place it on a flat, static-protective surface (see “Remove the drive cage assembly” on page 83).

e. Locate the CMOS battery socket on the system board.

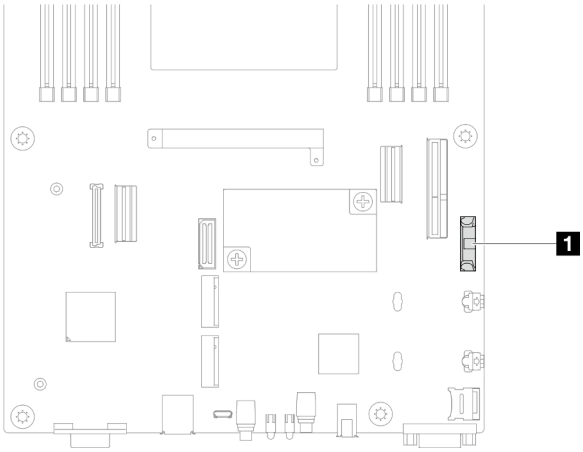

Figure 41. Location of the CMOS battery socket

Step 2. Remove the CMOS battery from the node.

a. 1 Gently push the battery socket clip backward to release the CMOS battery.

b. 2 Carefully take the battery out of the socket.

Attention: Avoid using excessive force on the CMOS battery, as it might damage the socket on the system board and result in system board replacement.

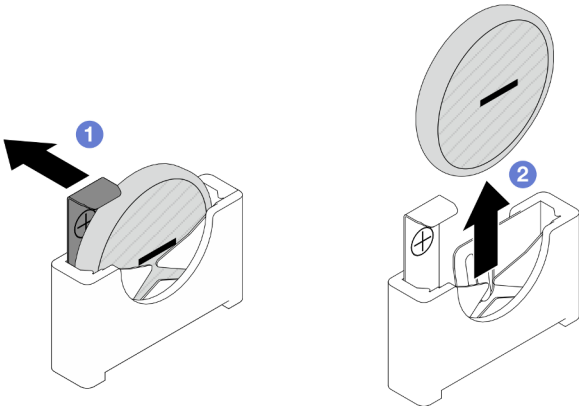

Figure 42. Removal of the CMOS battery

After you finish

1. Install a replacement unit (see "Install a CMOS battery (CR2032)" on page 80).
2. Dispose of the CMOS battery as required by local ordinances or regulations.

Demo video

https://www.youtube.com/watch?v=CGaWPPpGIIk

Install a CMOS battery (CR2032)

Follow instructions in this section to install a CMOS battery (CR2032).

About this task

To avoid potential danger, make sure to read and follow the safety information.

S004



CAUTION:
When replacing the lithium battery, use only Lenovo specified part number or an equivalent type of battery recommended by the manufacturer. If your system has a module containing a lithium battery, replace it only with the same module type made by the same manufacturer. The battery contains lithium and can explode if not properly used, handled, or disposed of.

Do not:

- **Throw or immerse into water**

- **Heat to more than 100°C (212°F)**
- **Repair or disassemble**

Dispose of the battery as required by local ordinances or regulations.

S005



CAUTION:
The battery is a lithium ion battery. To avoid possible explosion, do not burn the battery. Exchange it only with the approved part. Recycle or discard the battery as instructed by local regulations.

Attention:

- Read "Installation Guidelines" on page 39 and "Safety inspection checklist" on page 40 to make sure that you work safely.
- Touch the static-protective package that contains the component to any unpainted metal surface on the node and chassis; then, take the component out of the package and place it on a static-protective surface.
- Make sure to read the following notes carefully before replacing the CMOS battery in the node.
  - Do not make CMOS battery in contact with any metal surface during the replacement. Any contact with a metal surface, such as the node and chassis side, can cause damages to the battery.
  - When replacing the battery, you must replace it with another CMOS battery of the exact same type (CR2032) made by the same manufacturer.
  - After replacing the battery, make sure to reconfigure the node and reset the system date and time.
  - Dispose of the battery as required by local ordinances or regulations.

Procedure

Step 1. Locate the CMOS battery socket on the system board.

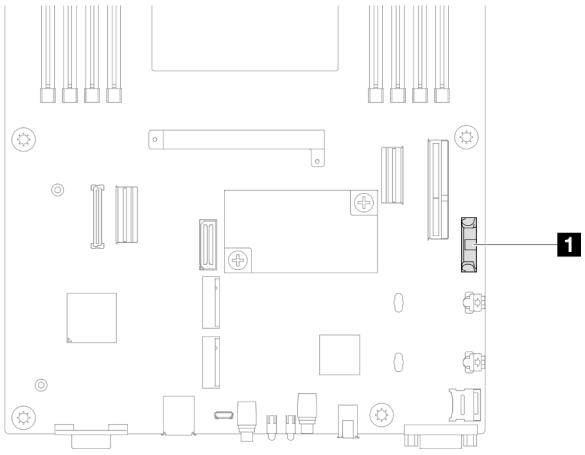

Figure 43. Location of the CMOS battery socket

Step 2. Follow any special handling and installation instructions that come with the CMOS battery.

Step 3. Install the new CMOS battery into the node.

a. ❶ Slightly pivot open the socket clip of the CMOS battery socket.

b. ❷ Insert the battery into the socket, orienting the battery so that the positive (+) side faces toward the positive side of the socket.

c. ❸ Make sure that the battery clip holds the battery securely.

Attention: Avoid using excessive force on the CMOS battery, as it might damage the socket on the system board and result in system board replacement.

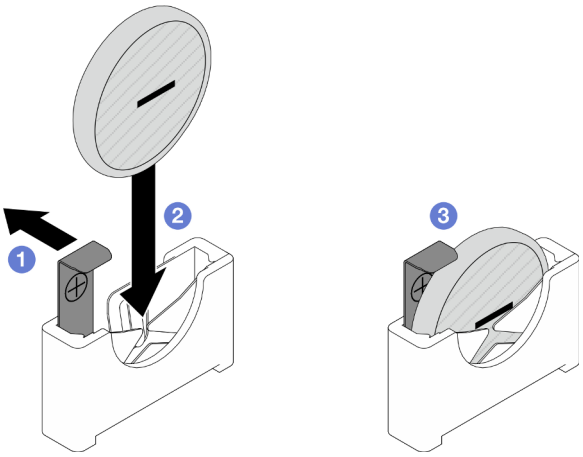

Figure 44. Installation of a CMOS battery

After you finish

1. Reconnect all the required cables to the drive backplane; then, reinstall the drive cage assembly to the node (see "E3.S drive backplane cable routing" on page 178 and "Install a drive cage assembly" on page 87).
2. Make sure that all the required cables are routed and connected correctly; then, reinstall the top cover (see "Install the top cover" on page 171).
3. Reinstall the node into the chassis (see "Install a node to the chassis" on page 74).
4. Reinstall all drives and drive fillers (if any) to the node (see "Install a hot-swap drive" on page 96).
5. Make sure that the required power supply units are installed and power cords are connected; then, power on the node (see "Install a hot-swap power supply" on page 58 and "Power on the node" on page 46).
6. Proceed to complete the parts replacement (see "Complete the parts replacement" on page 172).
7. Set the date, time, and any passwords via the **Setup Utility.** After the CMOS battery installation, the node must be reconfigured, and the system date and time must be reset.

Demo video

https://www.youtube.com/watch?v=G1LL15i7Qhg

Drive cage assembly replacement

Follow instructions in this section to remove or install the drive cage assembly.

Note: Depending on the specific configuration, the node might not come with this component.

On the front of the SD530 V3 node, there is either a drive cage or a front OCP cage installed.

Remove the drive cage assembly

Follow instructions in this section to remove the drive cage assembly.

About this task

To avoid potential danger, make sure to read and follow the safety information.

Attention: Read “Installation Guidelines” on page 39 and “Safety inspection checklist” on page 40 to make sure that you work safely.

Procedure

Step 1. Make preparations for this task.

a. Power off the node (see “Power off the node” on page 46); then, disconnect all external cables from the node.

b. Remove the node from the chassis (see “Remove a node from the chassis” on page 70); then, carefully lay the node on a flat, static-protective surface, orienting the node with the front toward you.

Notes:

- When removing the node, note the node tray number and make sure to install the node in the same tray from which it was removed. Reinstalling the node into a different tray requires the node to be reconfigured.
- For safety, make sure to hold the node with both hands when lifting the node.

c. Remove the top cover (see “Remove the top cover” on page 169).

Step 2. Disconnect all the cables from the drive backplane.

Step 3. Remove the drive cage assembly from the node.

a. ❶ Remove the seven screws that secure the cage.

b. ❷ Lift the cage out of the node.

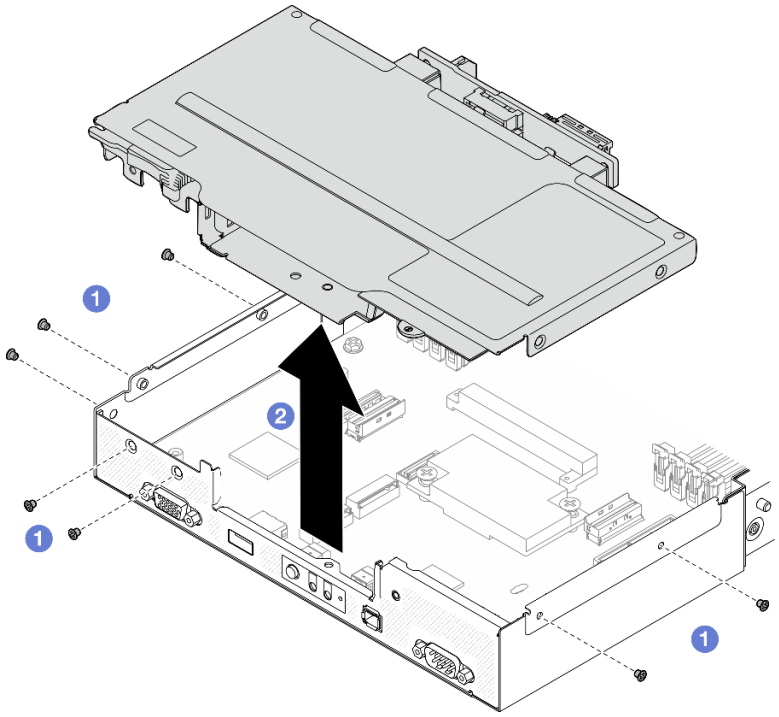

Figure 45. Removal of the drive cage assembly

Step 4. Lay the drive cage on a flat, static-protective surface.

After you finish

1. Install a replacement unit (see “Install a drive cage assembly” on page 87).
2. If you are instructed to return the component or optional device, follow all packaging instructions, and use any packaging materials for shipping that are supplied to you.

Demo video

https://www.youtube.com/watch?v=5KGEXu9Htpg

Remove the drive backplane

Follow instructions in this section to remove the drive backplane.

About this task

To avoid potential danger, make sure to read and follow the safety information.

Attention: Read “Installation Guidelines” on page 39 and “Safety inspection checklist” on page 40 to make sure that you work safely.

Procedure

Step 1. Make preparations for this task.

a. Power off the node (see “Power off the node” on page 46); then, disconnect all external cables from the node.

b. Remove the node from the chassis (see “Remove a node from the chassis” on page 70); then, carefully lay the node on a flat, static-protective surface, orienting the node with the front toward you.

Notes:

- When removing the node, note the node tray number and make sure to install the node in the same tray from which it was removed. Reinstalling the node into a different tray requires the node to be reconfigured.
- For safety, make sure to hold the node with both hands when lifting the node.

c. Remove all the installed drives and drive fillers (if any) from the node; then, place the drives and fillers on a flat, static-protective surface (see “Remove a hot-swap drive” on page 93).

d. Remove the top cover (see “Remove the top cover” on page 169).

e. Disconnect all the cables from the drive backplane; then, remove the drive cage assembly from the node and place it on a flat, static-protective surface (see “Remove the drive cage assembly” on page 83).

Step 2. Remove the drive backplane from the drive cage.

a. 1 Remove the two screws that secure the backplane.

b. 2 Lift the backplane to pull it out of the drive cage.

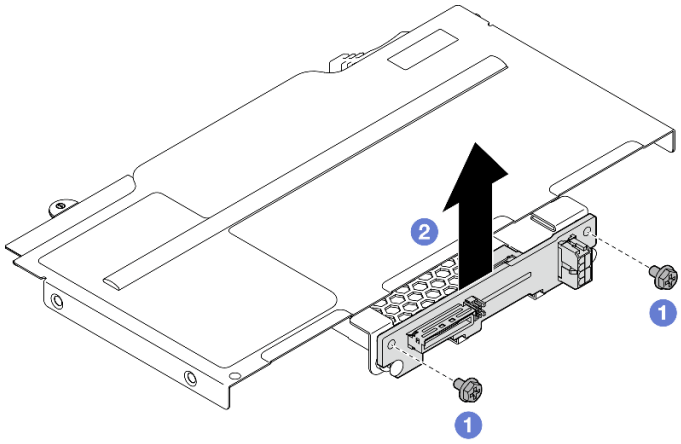

Figure 46. Removal of the drive backplane

After you finish

1. Install a replacement unit (see “Install the drive backplane” on page 85).
2. If you are instructed to return the component or optional device, follow all packaging instructions, and use any packaging materials for shipping that are supplied to you.

Demo video

https://www.youtube.com/watch?v=5KGEXu9Htpg

Install the drive backplane

Follow instructions in this section to install the drive backplane.

About this task

To avoid potential danger, make sure to read and follow the safety information.

Attention:

- Read “Installation Guidelines” on page 39 and “Safety inspection checklist” on page 40 to make sure that you work safely.
- Touch the static-protective package that contains the component to any unpainted metal surface on the node and chassis; then, take the component out of the package and place it on a static-protective surface.

Procedure

Step 1. Make preparations for this task.

a. Remove the drive cage assembly from the node and place it on a flat, static-protective surface (see “Remove the drive cage assembly” on page 83).

Step 2. Install the drive backplane.

a. 1 Align the drive backplane with the corresponding guide pins on the drive cage; then, lower and insert the drive backplane into place.

b. 2 Tighten the screws to secure the drive backplane.

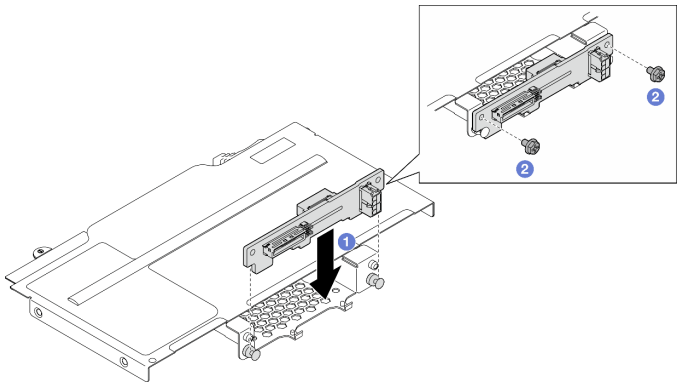

Figure 47. Installation of the drive backplane

After you finish

1. Reconnect all the required cables to the drive backplane; then, reinstall the drive cage assembly to the node (see “E3.S drive backplane cable routing” on page 178 and “Install a drive cage assembly” on page 87).
2. Make sure that all the required cables are routed and connected correctly; then, reinstall the top cover (see “Install the top cover” on page 171).
3. Reinstall the node into the chassis (see “Install a node to the chassis” on page 74).
4. Reinstall all drives and drive fillers (if any) to the node (see “Install a hot-swap drive” on page 96).
5. Make sure that the required power supply units are installed and power cords are connected; then, power on the node (see “Install a hot-swap power supply” on page 58 and “Power on the node” on page 46).
6. Proceed to complete the parts replacement (see “Complete the parts replacement” on page 172).

Demo video

https://www.youtube.com/watch?v=DOIKWNmYObA

Install a drive cage assembly

Follow instructions in this section to install a drive cage assembly.

About this task

To avoid potential danger, make sure to read and follow the safety information.

Attention:

- Read “Installation Guidelines” on page 39 and “Safety inspection checklist” on page 40 to make sure that you work safely.
- Touch the static-protective package that contains the component to any unpainted metal surface on the node and chassis; then, take the component out of the package and place it on a static-protective surface.

Procedure

Step 1. If the drive backplane has not been installed yet, install it to the drive cage; then, reconnect all the required cables to the drive backplane (see “E3.S drive backplane cable routing” on page 178 and “Install the drive backplane” on page 85).

Step 2. Install the drive cage assembly to the node.

a. 1 Lower the cage into the node until all the screw holes are aligned.

b. 2 Tighten the seven screws to secure the cage.

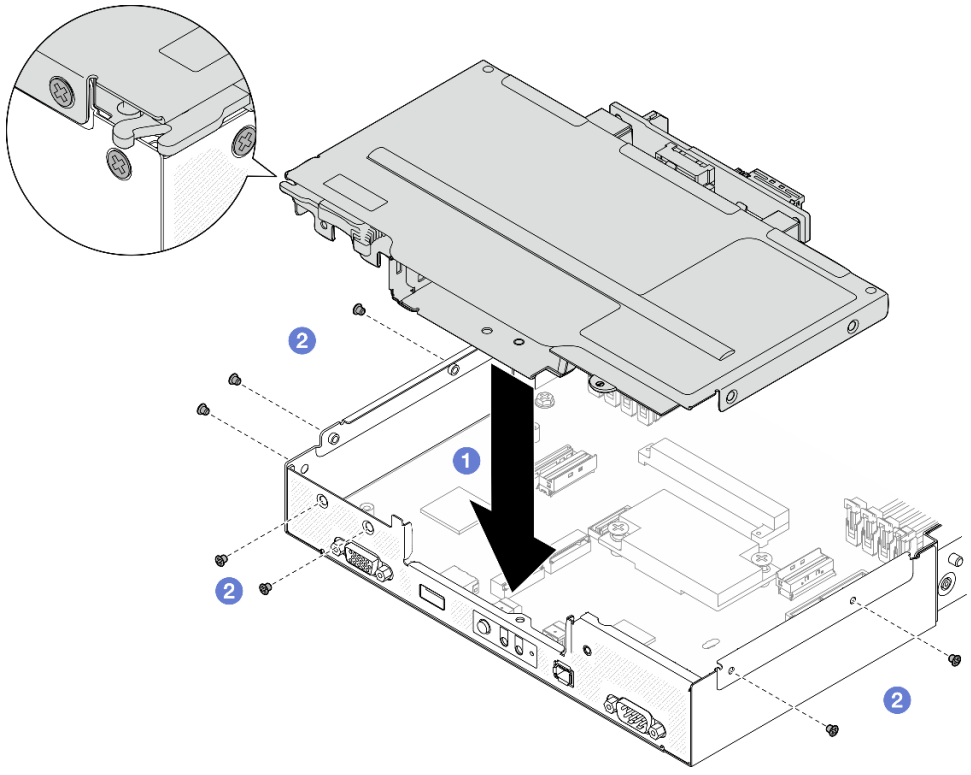

Figure 48. Installation of the drive cage assembly

After you finish

1. Make sure that all the required cables are routed and connected correctly; then, reinstall the top cover (see “Install the top cover” on page 171).
2. Reinstall the node into the chassis (see “Install a node to the chassis” on page 74).
3. Make sure that the required power supply units are installed and power cords are connected; then, power on the node (see “Install a hot-swap power supply” on page 58 and “Power on the node” on page 46).
4. Proceed to complete the parts replacement (see “Complete the parts replacement” on page 172).

Demo video

https://www.youtube.com/watch?v=DOIKWNmYObA

Fan replacement

Follow instructions in this section to remove or install the fans.

Remove a fan

Follow instructions in this section to remove a fan.

About this task

To avoid potential danger, make sure to read and follow the safety information.

Attention: Read “Installation Guidelines” on page 39 and “Safety inspection checklist” on page 40 to make sure that you work safely.

Procedure

Step 1. Make preparations for this task.

a. Power off the node (see “Power off the node” on page 46); then, disconnect all external cables from the node.

b. Remove the node from the chassis (see “Remove a node from the chassis” on page 70); then, carefully lay the node on a flat, static-protective surface, orienting the node with the front toward you.

Notes:

- When removing the node, note the node tray number and make sure to install the node in the same tray from which it was removed. Reinstalling the node into a different tray requires the node to be reconfigured.
- For safety, make sure to hold the node with both hands when lifting the node.

c. Remove the top cover (see “Remove the top cover” on page 169).

d. If the GPU air duct is installed in the node, remove it (see “Remove the GPU air duct” on page 90).

Step 2. Identify the fan to be removed; then, remove the fan from the fan cage.

a. ❶ Pull out the four rivets that secure the fan to the fan cage on the top side.

b. ❷ Press and hold the fan cable latch.

c. ❸ Disconnect the fan cable from the system board.

d. ❹ Lift the fan out of the fan cage.

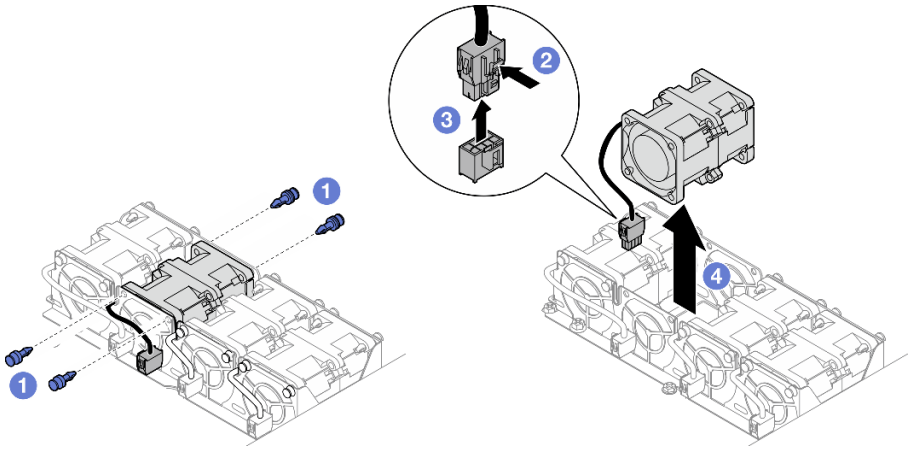

Figure 49. Fan removal

After you finish

1. Install a replacement unit (see “Install a fan” on page 89).

   Important: To maintain proper cooling, all the fans must be installed during operation.
2. If you are instructed to return the component or optional device, follow all packaging instructions, and use any packaging materials for shipping that are supplied to you.

Demo video

https://www.youtube.com/watch?v=yVgYQZMfwtw

Install a fan

Follow instructions in this section to install a fan.

About this task

To avoid potential danger, make sure to read and follow the safety information.

Attention:

- Read “Installation Guidelines” on page 39 and “Safety inspection checklist” on page 40 to make sure that you work safely.
- Touch the static-protective package that contains the component to any unpainted metal surface on the node and chassis; then, take the component out of the package and place it on a static-protective surface.

Procedure

Step 1. Install the fan.

a. ❶ Align the fan with the fan slot in the fan cage as illustrated; then, lower and press the fan into the fan slot until it is securely seated.

b. ❷ Connect the fan cable to the system board. See “Fan cable routing” on page 179.

c. ❸ Insert the four rivets on the top side from the exterior of the fan cage to secure the fan to the fan cage.

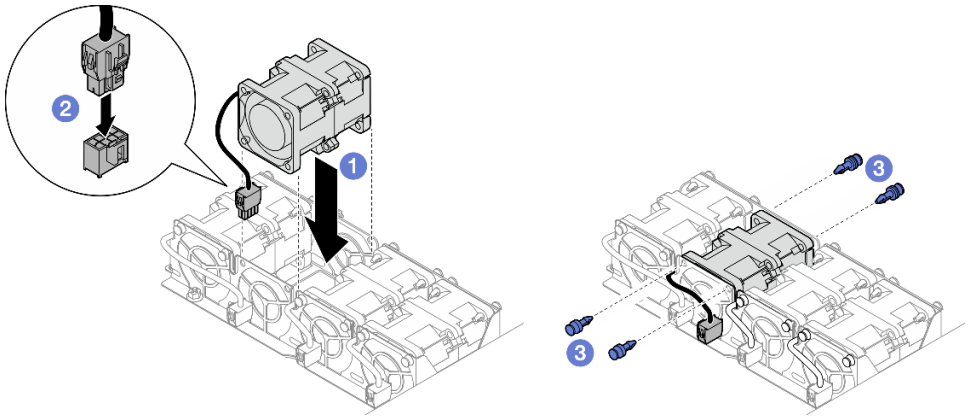

Figure 50. Fan installation

After you finish

1. Make sure that all the required cables are routed and connected correctly; then, reinstall the top cover (see “Install the top cover” on page 171).
2. Reinstall the node into the chassis (see “Install a node to the chassis” on page 74).
3. Make sure that the required power supply units are installed and power cords are connected; then, power on the node (see “Install a hot-swap power supply” on page 58 and “Power on the node” on page 46).
4. Proceed to complete the parts replacement (see “Complete the parts replacement” on page 172).

Demo video

https://www.youtube.com/watch?v=59Ey65p1OMw

GPU air duct replacement

Follow instructions in this section to remove or install the GPU air duct.

Note: Depending on the specific configuration, the node might not come with this component.

Remove the GPU air duct

Follow instructions in this section to remove the GPU air duct.

About this task

To avoid potential danger, make sure to read and follow the safety information.

Attention: Read “Installation Guidelines” on page 39 and “Safety inspection checklist” on page 40 to make sure that you work safely.

Procedure

Step 1. Make preparations for this task.

a. Power off the node (see “Power off the node” on page 46); then, disconnect all external cables from the node.

b. Remove the node from the chassis (see “Remove a node from the chassis” on page 70); then, carefully lay the node on a flat, static-protective surface, orienting the node with the front toward you.

Notes:

- When removing the node, note the node tray number and make sure to install the node in the same tray from which it was removed. Reinstalling the node into a different tray requires the node to be reconfigured.
- For safety, make sure to hold the node with both hands when lifting the node.

c. Remove the top cover (see “Remove the top cover” on page 169).

Step 2. Remove the GPU air duct.

a. ① Loosen the screw that secures the GPU air duct.

b. ② Hold the edges of the GPU air duct; then, lift the GPU air duct out of the node.

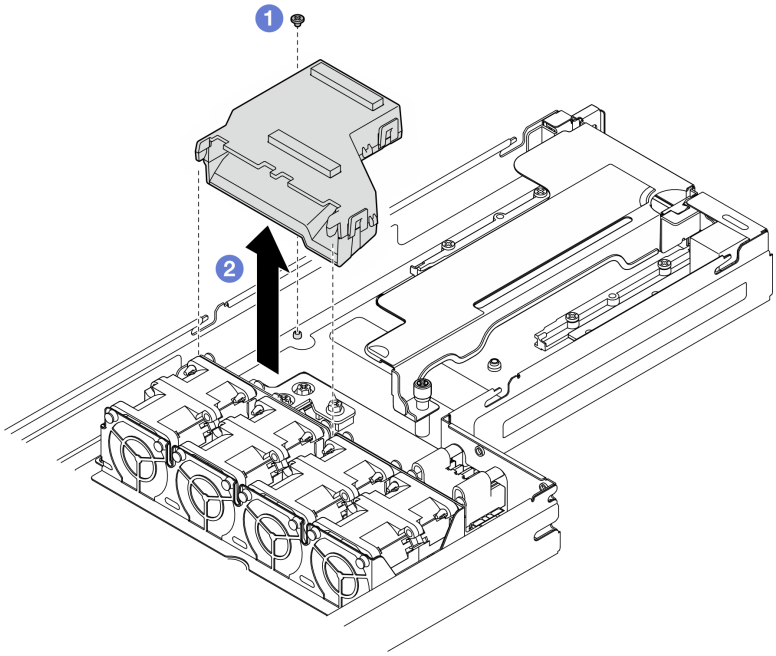

Figure 51. Removal of the GPU air duct

After you finish

1. Install a replacement unit (see “Install a GPU air duct” on page 91).
2. If you are instructed to return the component or optional device, follow all packaging instructions, and use any packaging materials for shipping that are supplied to you.

Demo video

https://www.youtube.com/watch?v=g5mtB2oIxrk

Install a GPU air duct

Follow instructions in this section to install a GPU air duct.

About this task

To avoid potential danger, make sure to read and follow the safety information.

Attention:

- Read “Installation Guidelines” on page 39 and “Safety inspection checklist” on page 40 to make sure that you work safely.
- Touch the static-protective package that contains the component to any unpainted metal surface on the node and chassis; then, take the component out of the package and place it on a static-protective surface.

Procedure

Step 1. Install the GPU air duct.

a. 1 Align the GPU air duct with the guide pins on the edge of the fan cage. Lower and insert the GPU air duct until it is securely seated in place.

b. 2 Tighten the screw to secure the GPU air duct.

Notes:

- Manage the cables so the GPU air duct can be seated securely.
- Make sure that the standoffs are securely seated in the holes of the GPU air duct as illustrated.

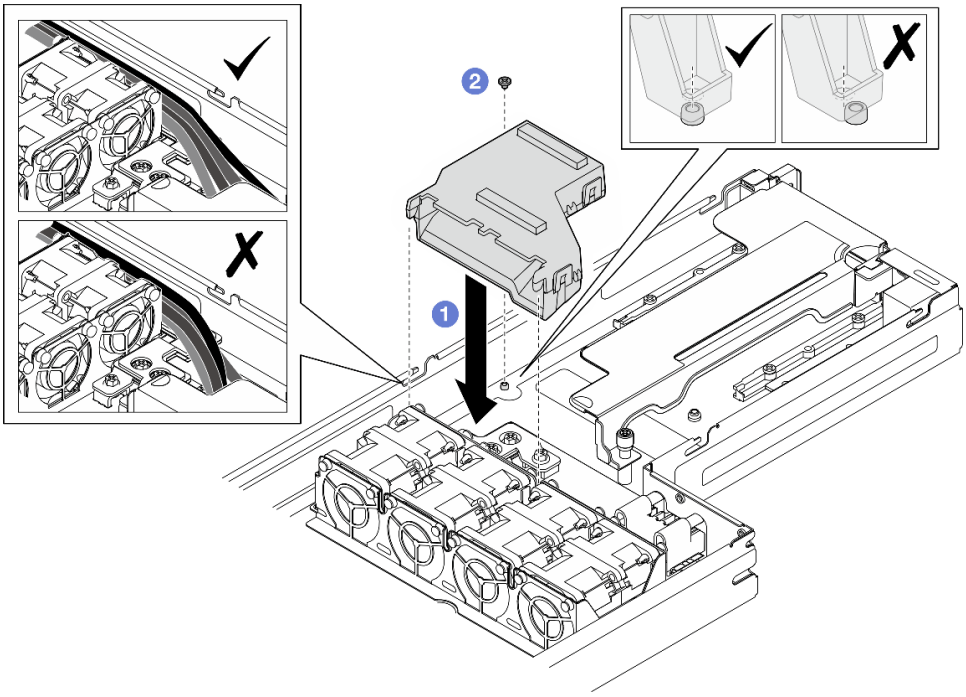

Figure 52. Installation of the GPU air duct

After you finish

1. Make sure that all the required cables are routed and connected correctly; then, reinstall the top cover (see “Install the top cover” on page 171).
2. Reinstall the node into the chassis (see “Install a node to the chassis” on page 74).
3. Make sure that the required power supply units are installed and power cords are connected; then, power on the node (see “Install a hot-swap power supply” on page 58 and “Power on the node” on page 46).
4. Proceed to complete the parts replacement (see “Complete the parts replacement” on page 172).

Demo video

https://www.youtube.com/watch?v=-ptj7oElVE0

Hot-swap drive replacement

Follow instructions in this section to remove or install a hot-swap drive.

Remove a hot-swap drive

Follow instructions in this section to remove a hot-swap drive.

About this task

Attention:

- Make sure to save the data on the drive, especially if it is part of a RAID array, before removing it from the node.
- To avoid damage to the drive connectors, make sure that the node top cover is installed and fully closed whenever installing or removing a drive.
- To make sure that there is adequate system cooling, do not operate the node for more than two minutes without either a drive or a filler installed in each drive bay.
- If one or more NVMe solid-state drives are to be removed, it is recommended to disable them beforehand via the operating system.
- Before removing or making changes to the drives, drive controllers (including controllers that are integrated on the system board), drive backplanes, or drive cables, make sure to back up all important data that is stored on the drives.
- Before removing any component of a RAID array (drive, RAID card, etc.), back up all RAID configuration information.
- Make sure to have the drive bay fillers readily available if some drive bays will be left empty after the removal.

Procedure

Step 1. Remove the E3.S drive cage cover.

a. ❶ Loosen the thumbscrew on the drive cage cover.

b. ❷ Pull the drive cage cover out of the node.

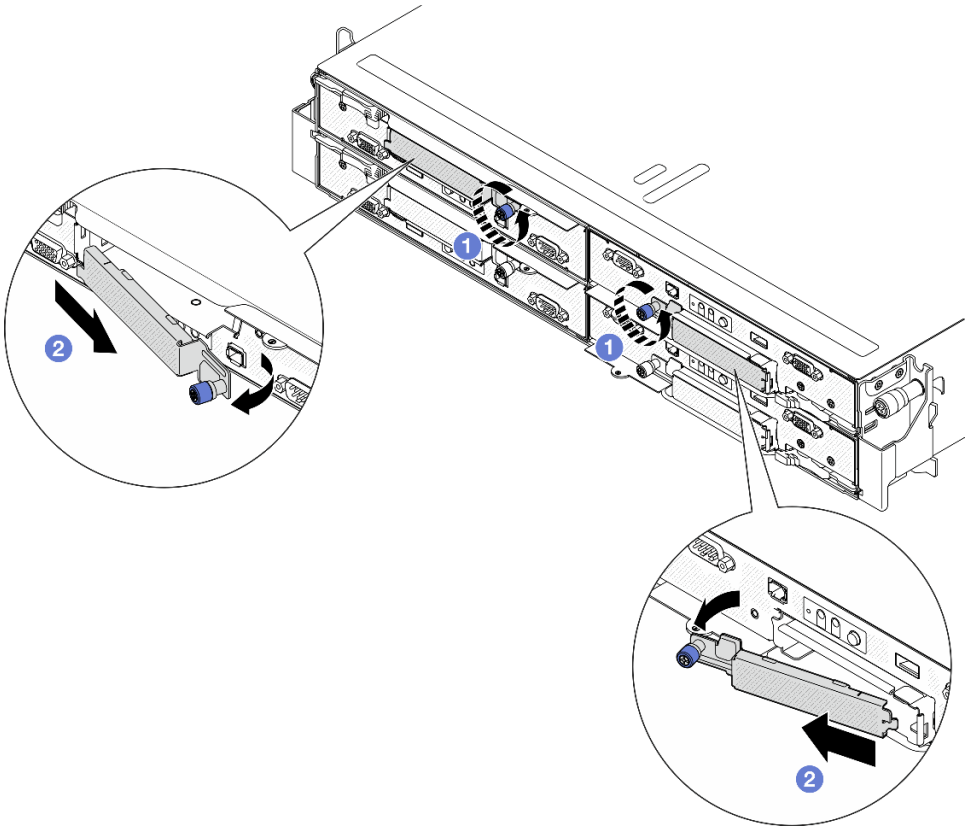

Figure 53. E3.S drive cage cover removal

Step 2. Remove the E3.S hot-swap drive.

a. ❶ Slide the latch to unlock the drive handle.

b. ❷ Rotate the drive handle to the open position.

c. ❸ Grasp the handle and slide the drive out of the drive bay.

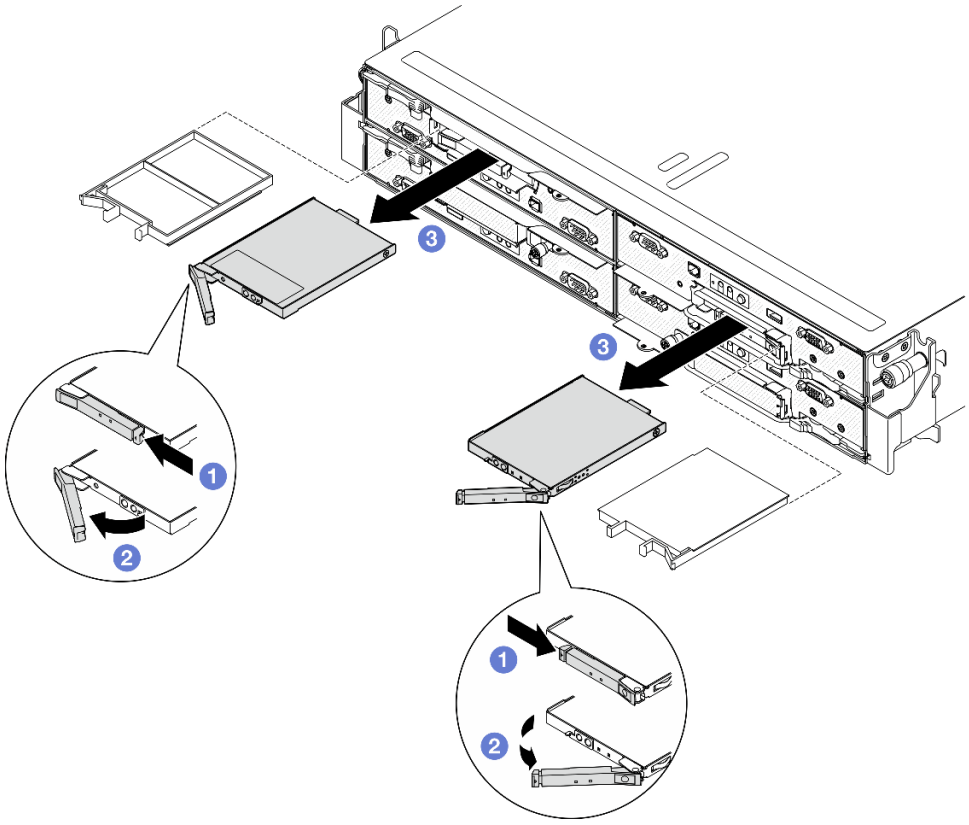

Figure 54. E3.S hot-swap drive removal

Step 3. Install a drive bay filler or replacement drive as soon as possible. See "Install a hot-swap drive" on page 96.

Step 4. Reinstall the E3.S drive cage cover back to the node.

a. ❶ Insert the drive cage cover to the slot.

b. ❷ Close the drive cage cover.

c. ❸ Tighten the thumbscrew on the drive cage cover.

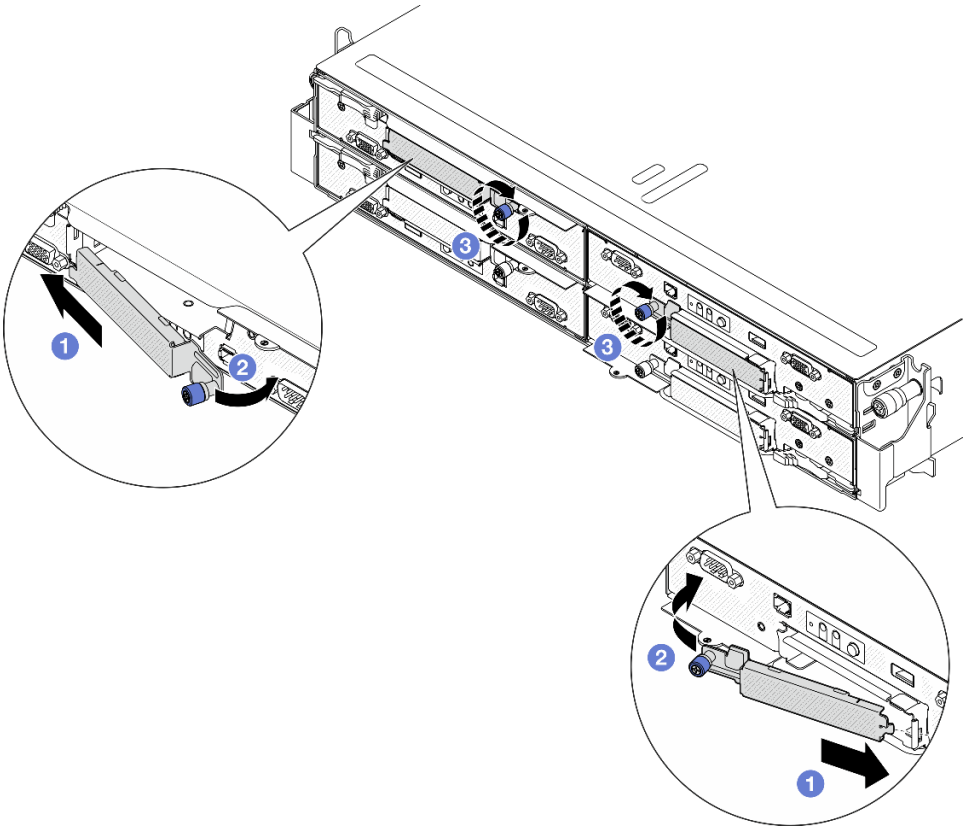

Figure 55. E3.S drive cage cover installation

After you finish

If you are instructed to return the component or optional device, follow all packaging instructions, and use any packaging materials for shipping that are supplied to you.

Demo video

https://www.youtube.com/watch?v=fTU1QLlpWHs

Install a hot-swap drive

Follow instructions in this section to install a hot-swap drive.

About this task

Attention:

- To avoid damage to the drive connectors, make sure that the node top cover is installed and fully closed whenever installing or removing a drive.
- To make sure that there is adequate system cooling, do not operate the node for more than two minutes without either a drive or a filler installed in each drive bay.
- The drive bays are numbered in installation ordering (starting from number “0”). Follow this sequential order of the drive bays when installing a drive. To locate the drive bays of the node, see the pull-out information tab on the front of the node or “Node front view” on page 19.
- The following notes describe the type of drives that the node supports and other information that must be considered for drive installation.

- Locate the documentation that comes with the drive and follow those instructions in addition to the instructions in this topic.
- The drive cage supports up to two E3.S hot-swap NVMe drives.
- The electromagnetic interference (EMI) integrity and cooling of the node are protected by having all bays and PCI and PCIe slots covered or occupied. When installing a drive, PCI, or PCIe adapter, save the EMC shield and filler panel from the bay or PCI or PCIe adapter slot cover in the event that you later remove the device.
- For a complete list of supported optional devices for the node, see https://serverproven.lenovo.com.

Firmware and driver download: You might need to update the firmware or driver after replacing a component.

- Go to https://datacentersupport.lenovo.com/products/servers/thinksystem/sd530v3/7dd3/downloads/driver-list to see the latest firmware and driver updates for your server.
- Go to "Update the firmware" on page 189 for more information on firmware updating tools.

Procedure

Step 1. Remove the E3.S drive cage cover.

a. ❶ Loosen the thumbscrew on the drive cage cover.

b. ❷ Pull the drive cage cover out of the node.

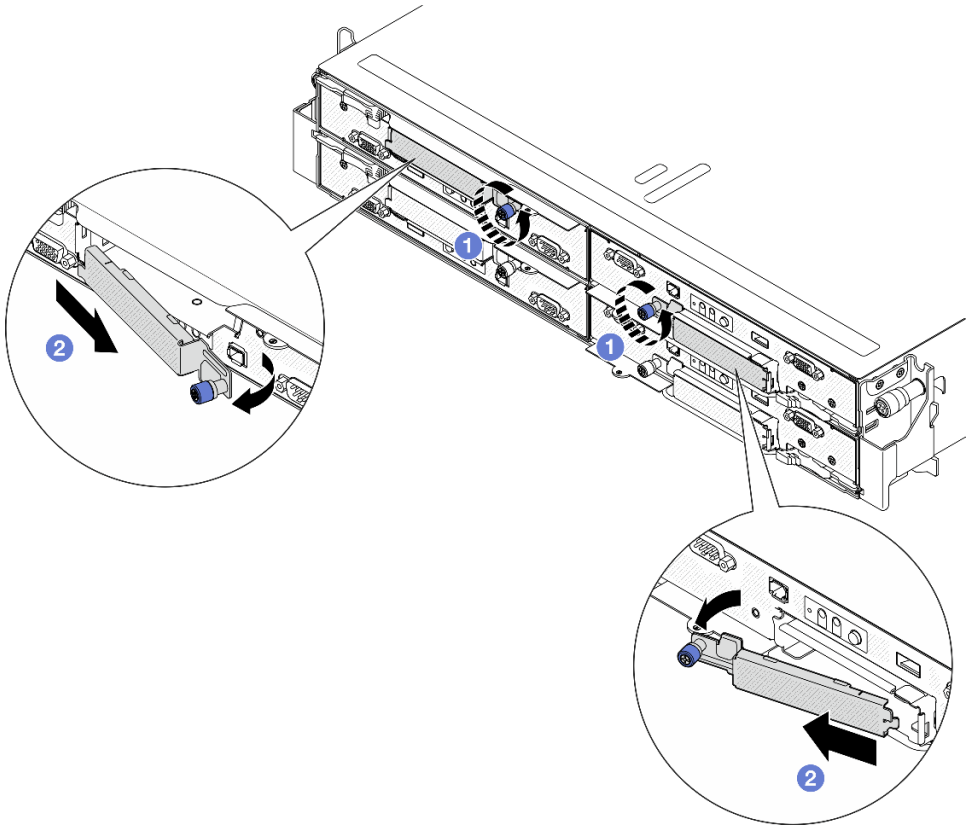

Figure 56. E3.S drive cage cover removal

Step 2. If the drive bay contains a filler, pull the release lever on the filler and slide it out of the bay.

Step 3. Install the E3.S hot-swap drive.

a. 1 Make sure that the drive handle is in the open position. Then, align the drive with the guide rails in the bay and gently slide the drive into the bay until it stops.

b. 2 Rotate the drive handle to the fully closed position until the handle latch clicks.

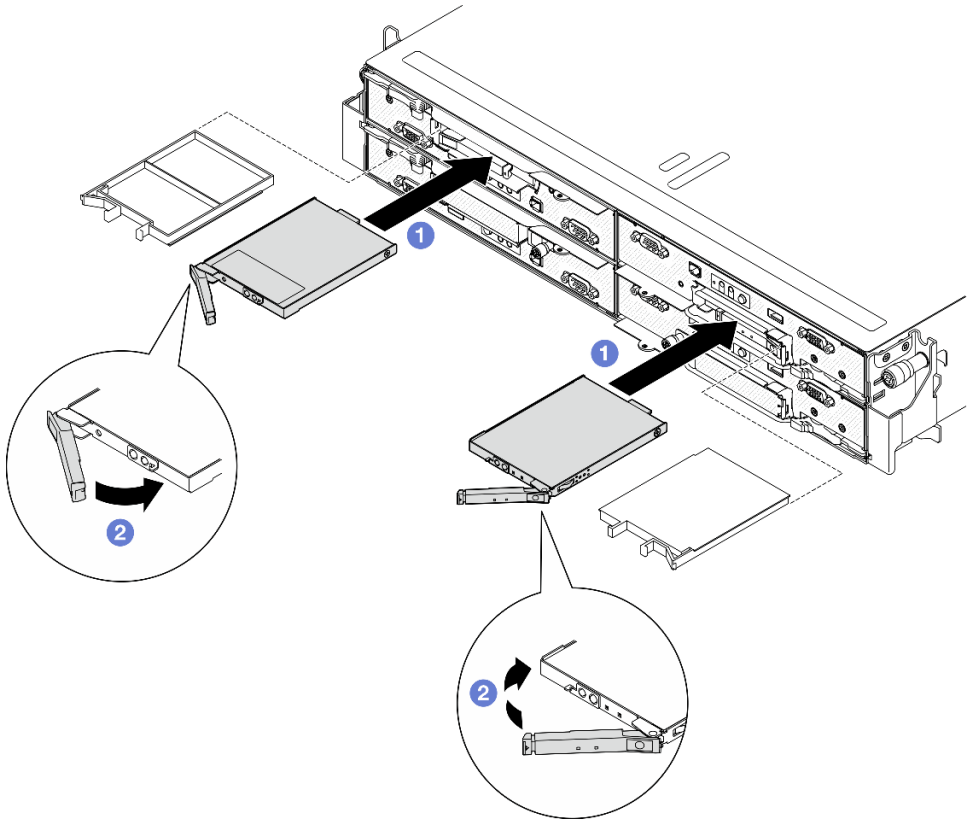

Figure 57. E3.S hot-swap drive installation

Step 4. If you have additional drives to install, do so now; if any of the drive bays is left empty, fill it with a drive bay filler.

Step 5. Check the drive status LED to verify that the drive is operating correctly (see "Drive LEDs" on page 209).

- If the yellow drive status LED is lit continuously, the drive is malfunctioning and must be replaced.
- If the green drive activity LED is flashing, the drive is functioning.

Step 6. Reinstall the E3.S drive cage cover back to the node.

a. 1 Insert the drive cage cover to the slot.

b. 2 Close the drive cage cover.

c. 3 Tighten the thumbscrew on the drive cage cover.

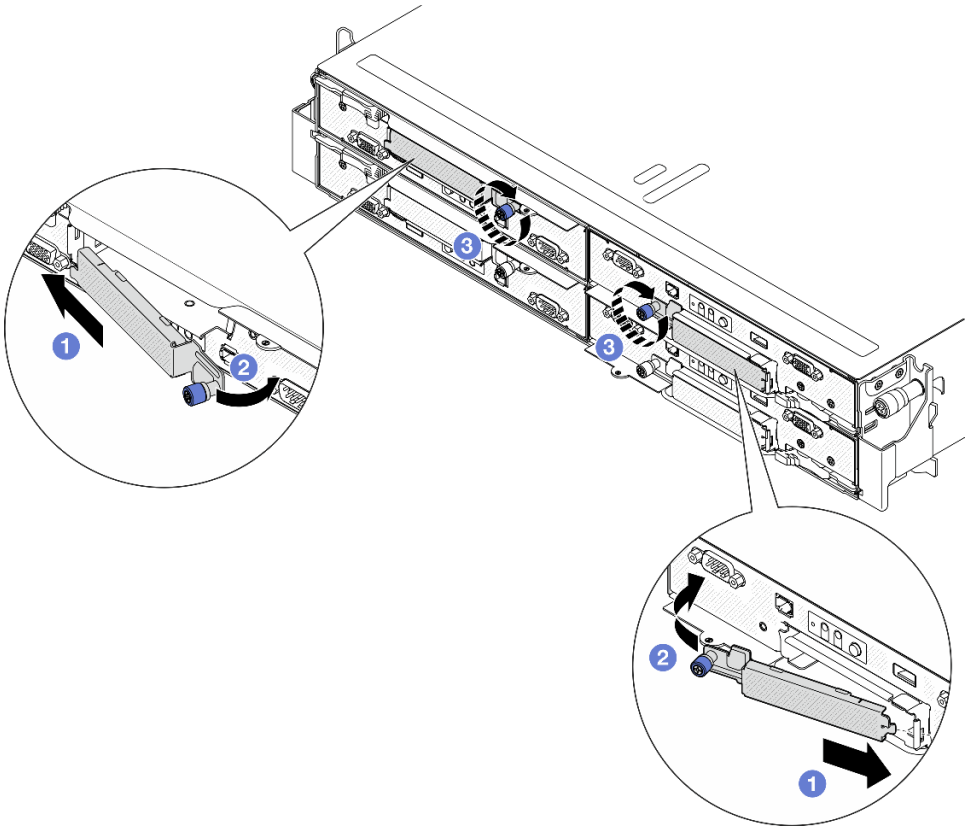

Figure 58. E3.S drive cage cover installation

After you finish

If the server is configured for RAID operation through a ThinkSystem RAID adapter, you might have to reconfigure your disk arrays after you install drives. See the ThinkSystem RAID adapter documentation for additional information about RAID operation and complete instructions for using ThinkSystem RAID adapter.

Demo video

https://www.youtube.com/watch?v=vIBmZQsuIms

M.2 drive replacement

Follow instructions in this section to remove or install an M.2 drive.

Remove an M.2 drive

Follow instructions in this section to remove an M.2 drive.

About this task

To avoid potential danger, make sure to read and follow the safety information.

Attention: Read “Installation Guidelines” on page 39 and “Safety inspection checklist” on page 40 to make sure that you work safely.

Procedure

Step 1. Make preparations for this task.

a. Power off the node (see “Power off the node” on page 46); then, disconnect all external cables from the node.

b. Remove the node from the chassis (see “Remove a node from the chassis” on page 70); then, carefully lay the node on a flat, static-protective surface, orienting the node with the front toward you.

Notes:

- When removing the node, note the node tray number and make sure to install the node in the same tray from which it was removed. Reinstalling the node into a different tray requires the node to be reconfigured.
- For safety, make sure to hold the node with both hands when lifting the node.

c. Remove the top cover (see “Remove the top cover” on page 169).

d. Disconnect all the cables from the drive backplane; then, remove the drive cage assembly from the node and place it on a flat, static-protective surface (see “Remove the drive cage assembly” on page 83).

e. Locate the M.2 connectors on the system board.

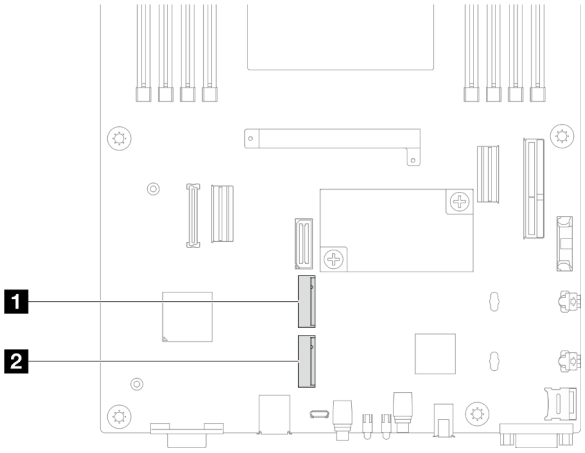

Figure 59. Location of the M.2 bays on the system board

1 M.2 bay 0	2 M.2 bay 1

Step 2. Remove the M.2 drive from the system board.

a. (1) Slightly press the retainer away from the M.2 drive to disengage the M.2 drive.

b. (2) Pivot the rear side of the M.2 drive slightly away from the system board.

c. (3) Pull the M.2 drive out of the connector at an angle of approximately 15 degrees.

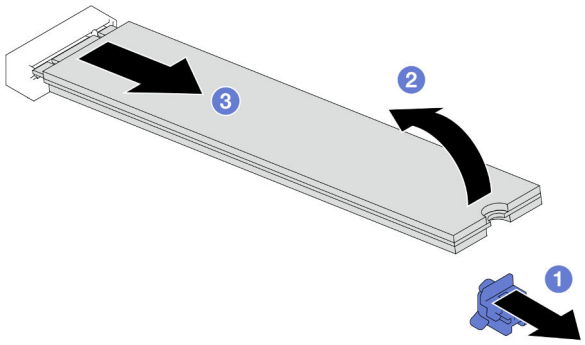

Figure 60. Removal of an M.2 drive

After you finish

1. If necessary, adjust location of the M.2 drive retainer to accommodate another M.2 drive of a different size (see “Adjust an M.2 drive retainer” on page 101).
2. Install a replacement unit (see “Install an M.2 drive” on page 102).
3. If you are instructed to return the component or optional device, follow all packaging instructions, and use any packaging materials for shipping that are supplied to you.

Demo video

https://www.youtube.com/watch?v=0Gq8nFvhX1A

Adjust an M.2 drive retainer

Follow instructions in this section to adjust the position of an M.2 drive retainer on the system board or on the M.2 boot adapter.

About this task

Sometimes you need to adjust the M.2 drive retainer to a correct keyhole that can accommodate the particular size of the M.2 drive you wish to install.

Attention:

- Read “Installation Guidelines” on page 39 and “Safety inspection checklist” on page 40 to make sure that you work safely.
- Touch the static-protective package that contains the component to any unpainted metal surface on the node and chassis; then, take the component out of the package and place it on a static-protective surface.

Procedure

Step 1. Adjust the position of the M.2 retainer on the system board.

a. 1 Rotate the retainer by 90 degrees to the unlocked position; then, lift the retainer from the system board.

b. 2 Locate the correct keyhole into which the retainer should be installed; then, insert the retainer into the keyhole, orienting at the unlocked position.

c. 3 Rotate the retainer by 90 degrees to the locked position.

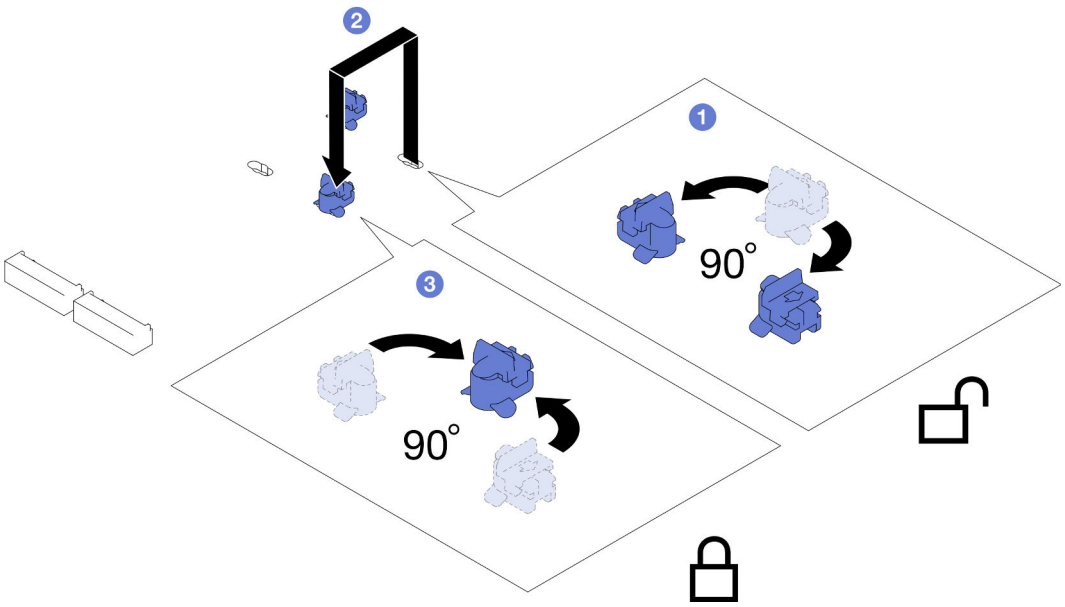

Figure 61. Adjustment of an M.2 drive retainer

After you finish

1. Install the required M.2 drive (see “Install an M.2 drive” on page 102).
2. If you are instructed to return the component or optional device, follow all packaging instructions, and use any packaging materials for shipping that are supplied to you.

Install an M.2 drive

Follow instructions in this section to install an M.2 drive.

About this task

To avoid potential danger, make sure to read and follow the safety information.

Attention:

- Read “Installation Guidelines” on page 39 and “Safety inspection checklist” on page 40 to make sure that you work safely.
- Touch the static-protective package that contains the component to any unpainted metal surface on the node and chassis; then, take the component out of the package and place it on a static-protective surface.

Procedure

Step 1. Locate the M.2 connectors on the system board. Then, determine to which connector the M.2 drive is to be installed.

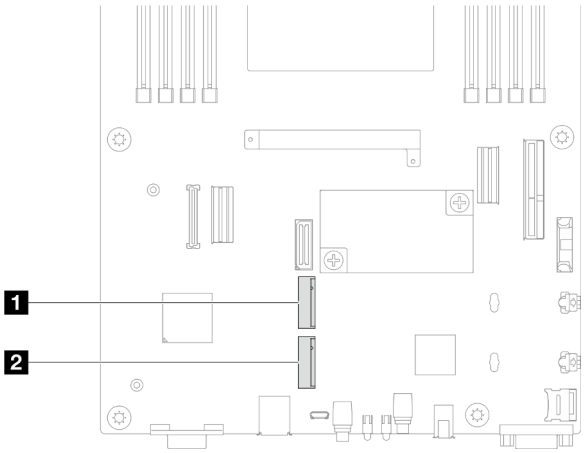

Figure 62. Location of the M.2 bays on the system board

1 M.2 bay 0	2 M.2 bay 1

Step 2. Install the M.2 drive to the system board.

a. 1 Insert the M.2 drive into the M.2 connector at an angle of approximately 15 degrees.

b. 2 Slightly press the retainer to accommodate the M.2 drive.

c. 3 Pivot and press down the M.2 drive; then, make sure the M.2 drive is engaged securely by the retainer.

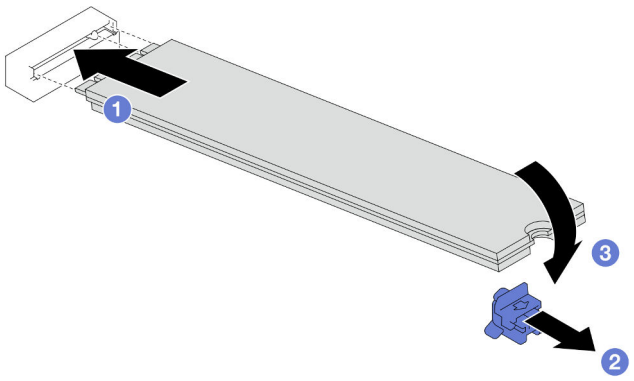

Figure 63. Installation of an M.2 drive

After you finish

1. Reconnect all the required cables to the drive backplane; then, reinstall the drive cage assembly to the node (see "E3.S drive backplane cable routing" on page 178 and "Install a drive cage assembly" on page 87).
2. Make sure that all the required cables are routed and connected correctly; then, reinstall the top cover (see "Install the top cover" on page 171).
3. Reinstall the node into the chassis (see "Install a node to the chassis" on page 74).
4. Make sure that the required power supply units are installed and power cords are connected; then, power on the node (see "Install a hot-swap power supply" on page 58 and "Power on the node" on page 46).
5. Proceed to complete the parts replacement (see "Complete the parts replacement" on page 172).

Demo video

https://www.youtube.com/watch?v=PQMPpedmTCo

Memory module replacement

Follow instructions in this section to remove or install a memory module.

Remove a memory module

Follow instructions in this section to remove a memory module.

About this task

To avoid potential danger, make sure to read and follow the safety information.

Attention:

- Read “Installation Guidelines” on page 39 and “Safety inspection checklist” on page 40 to make sure that you work safely.
- Make sure to remove or install memory module 20 seconds after disconnecting power cords from the system. It allows the system to be completely discharged of electricity and safe for handling memory module.
- Memory modules are sensitive to static discharge and require special handling. Refer to the standard guidelines for “Handling static-sensitive devices” on page 41:
  - Always wear an electrostatic-discharge strap when removing or installing memory modules. Electrostatic-discharge gloves can also be used.
  - Never hold two or more memory modules together so that they do not touch each other. Do not stack memory modules directly on top of each other during storage.
  - Never touch the gold memory module connector contacts or allow these contacts to touch the outside of the memory module connector housing.
  - Handle memory modules with care: never bend, twist, or drop a memory module.
  - Do not use any metal tools (such as jigs or clamps) to handle the memory modules, because the rigid metals may damage the memory modules.
  - Do not insert memory modules while holding packages or passive components, which can cause package cracks or detachment of passive components by the high insertion force.
- When a processor is installed, each of the DIMM slots connected to the processor must be installed with a DIMM or DIMM filler.
  - DIMM slots 1-8 are connected to processor 1
  - DIMM slots 9-16 are connected to processor 2

Important: Remove or install memory modules for one processor at a time.

Procedure

Step 1. Make preparations for this task.

a. Power off the node (see “Power off the node” on page 46); then, disconnect all external cables from the node.

b. Remove the node from the chassis (see “Remove a node from the chassis” on page 70); then, carefully lay the node on a flat, static-protective surface, orienting the node with the front toward you.

Notes:

- When removing the node, note the node tray number and make sure to install the node in the same tray from which it was removed. Reinstalling the node into a different tray requires the node to be reconfigured.
- For safety, make sure to hold the node with both hands when lifting the node.

c. Remove the top cover (see "Remove the top cover" on page 169).

Step 2. Locate the memory module slots and determine which memory module is to be removed from the node.

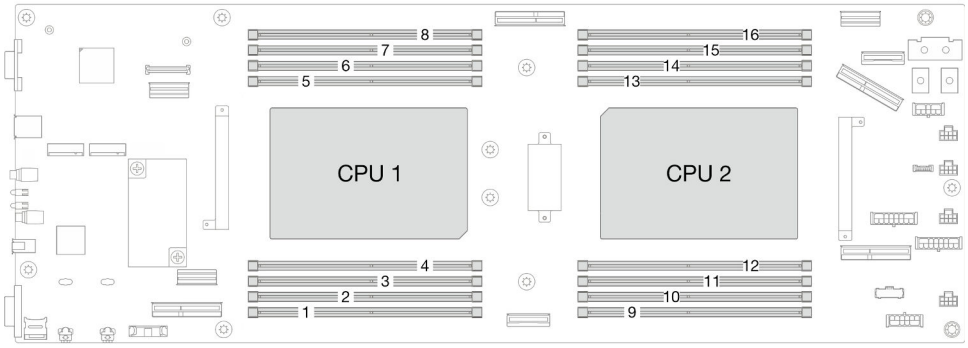

Figure 64. Memory module and processor location

Step 3. Remove the memory module from the slot.

Attention: To avoid breaking the retaining clips or damaging the DIMM connectors, handle the retaining clips gently.

a. ❶ Open the retaining clip at each end of the memory module slot.

b. ❷ Carefully hold both ends of the memory module and lift it out of the slot.

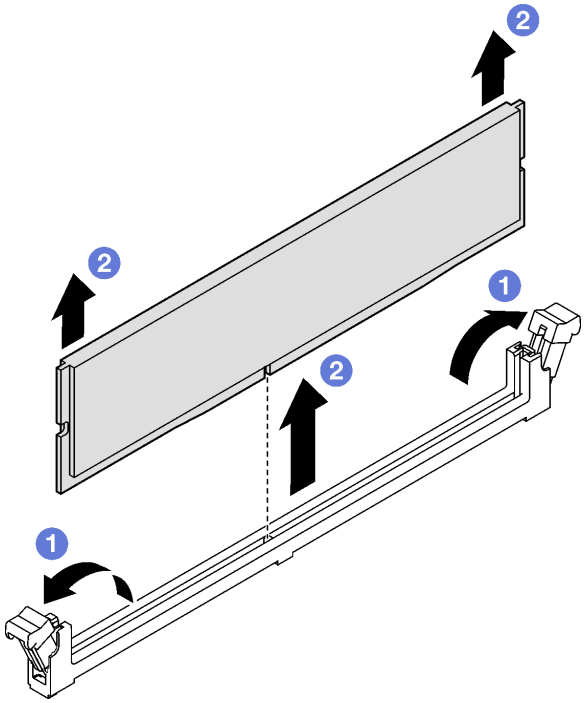

Figure 65. Removal of a memory module

After you finish

1. Install a replacement unit or filler (see “Install a memory module” on page 106) .
2. If you are instructed to return the component or optional device, follow all packaging instructions, and use any packaging materials for shipping that are supplied to you.

Demo video

https://www.youtube.com/watch?v=rANoKGrb-jA

Install a memory module

Follow instructions in this section to install a memory module.

About this task

See “Memory module installation rules and order” on page 42 for detailed information about memory configuration and setup.

To avoid potential danger, make sure to read and follow the safety information.

Attention:

- Read “Installation Guidelines” on page 39 and “Safety inspection checklist” on page 40 to make sure that you work safely.
- Make sure to remove or install memory module 20 seconds after disconnecting power cords from the system. It allows the system to be completely discharged of electricity and safe for handling memory module.
- Memory modules are sensitive to static discharge and require special handling. Refer to the standard guidelines for “Handling static-sensitive devices” on page 41:

- Always wear an electrostatic-discharge strap when removing or installing memory modules. Electrostatic-discharge gloves can also be used.
- Never hold two or more memory modules together so that they do not touch each other. Do not stack memory modules directly on top of each other during storage.
- Never touch the gold memory module connector contacts or allow these contacts to touch the outside of the memory module connector housing.
- Handle memory modules with care: never bend, twist, or drop a memory module.
- Do not use any metal tools (such as jigs or clamps) to handle the memory modules, because the rigid metals may damage the memory modules.
- Do not insert memory modules while holding packages or passive components, which can cause package cracks or detachment of passive components by the high insertion force.

- When a processor is installed, each of the DIMM slots connected to the processor must be installed with a DIMM or DIMM filler.
  - DIMM slots 1-8 are connected to processor 1
  - DIMM slots 9-16 are connected to processor 2

Important: Remove or install memory modules for one processor at a time.

Firmware and driver download: You might need to update the firmware or driver after replacing a component.

- Go to https://datacentersupport.lenovo.com/products/servers/thinksystem/sd530v3/7dd3/downloads/driver-list to see the latest firmware and driver updates for your server.
- Go to “Update the firmware” on page 189 for more information on firmware updating tools.

Procedure

Step 1. Locate the required memory module slot on the system board.

Notes:

- Remove or install memory modules for one processor at a time.
- Make sure to observe the installation rules and sequence order in “Memory module installation rules and order” on page 42.

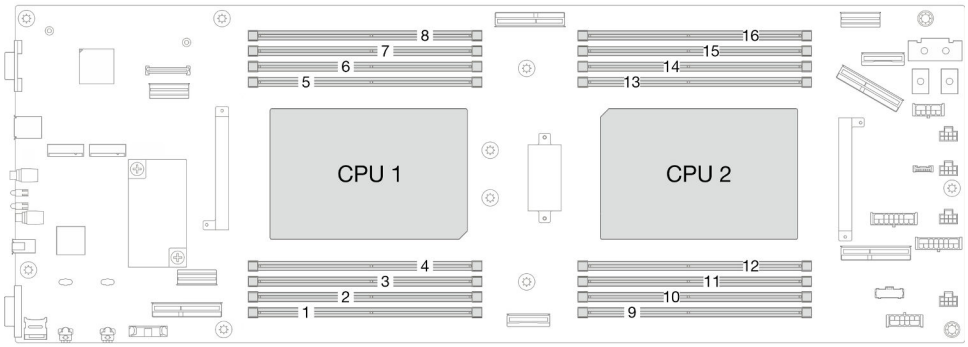

Figure 66. Memory module and processor location

Step 2. Touch the static-protective package that contains the memory module to any unpainted surface on the outside of the node. Then, take the memory module out of the package and place it on a static-protective surface.

Step 3. Install the memory module into the slot.

a. 1 Open the retaining clip at each end of the memory module slot.

b. 2 Align the memory module with the slot and gently place the memory module into the slot with both hands.

c. 3 Firmly press both ends of the memory module straight down into the slot until the retaining clips snap into the locked position.

Attention:

- To avoid breaking the retaining clips or damaging the DIMM connectors, handle the retaining clips gently.
- If there is a gap between the memory module and the retaining clips, the memory module has not been correctly inserted. In this case, open the retaining clips, remove the memory module, and then reinsert it.

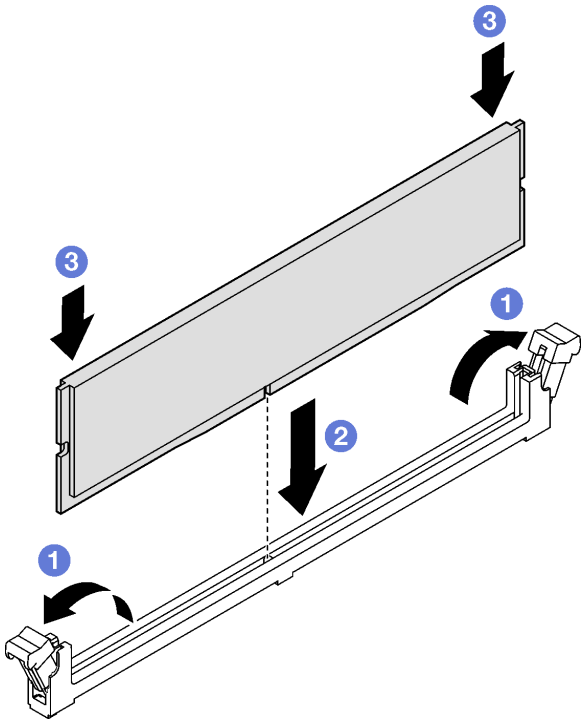

Figure 67. Installation of a memory module

After you finish

1. Make sure that all the required cables are routed and connected correctly; then, reinstall the top cover (see “Install the top cover” on page 171).
2. Reinstall the node into the chassis (see “Install a node to the chassis” on page 74).
3. Make sure that the required power supply units are installed and power cords are connected; then, power on the node (see “Install a hot-swap power supply” on page 58 and “Power on the node” on page 46).
4. Proceed to complete the parts replacement (see “Complete the parts replacement” on page 172).

Demo video

https://www.youtube.com/watch?v=P7DtP5RzNMw

MicroSD card replacement

Follow instructions in this section to remove or install a MicroSD card from or to the system board.

Remove the MicroSD card

Follow instructions in this section to remove the MicroSD card.

About this task

To avoid potential danger, make sure to read and follow the safety information.

Attention: Read “Installation Guidelines” on page 39 and “Safety inspection checklist” on page 40 to make sure that you work safely.

Procedure

Step 1. Make preparations for this task.

a. Power off the node (see “Power off the node” on page 46); then, disconnect all external cables from the node.

b. Remove the node from the chassis (see “Remove a node from the chassis” on page 70); then, carefully lay the node on a flat, static-protective surface, orienting the node with the front toward you.

Notes:

- When removing the node, note the node tray number and make sure to install the node in the same tray from which it was removed. Reinstalling the node into a different tray requires the node to be reconfigured.
- For safety, make sure to hold the node with both hands when lifting the node.

c. Remove the top cover (see “Remove the top cover” on page 169).

d. Disconnect all the cables from the drive backplane; then, remove the drive cage assembly from the node and place it on a flat, static-protective surface (see “Remove the drive cage assembly” on page 83).

Step 2. Locate the MicroSD socket on the system board.

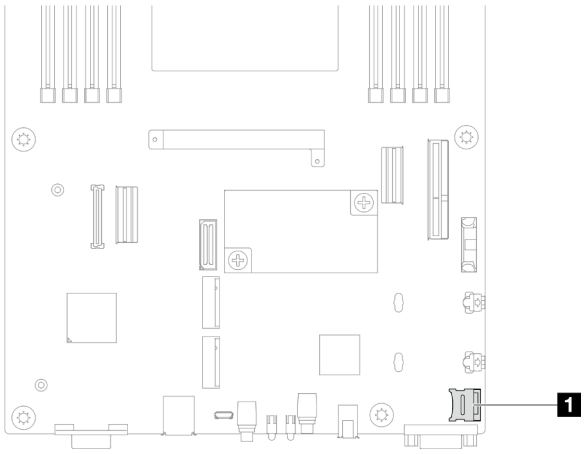

Figure 68. Location of the MicroSD socket

Step 3. Remove the MicroSD card.

a. 1 Slide the socket lid to the open position.
b. 2 Lift open the socket lid.
c. 3 Remove the MicroSD card from the socket.

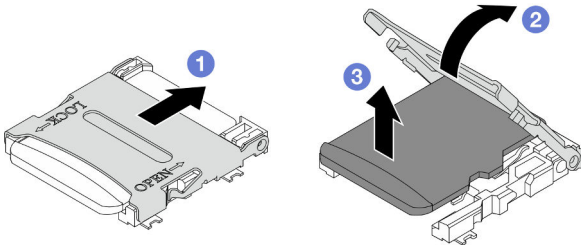

Figure 69. Removal of the MicroSD card

After you finish

1. Install a replacement unit (see "Install a MicroSD card" on page 110).
2. If you are instructed to return the component or optional device, follow all packaging instructions, and use any packaging materials for shipping that are supplied to you.

Demo video

https://www.youtube.com/watch?v=3YIcO28eJm8

Install a MicroSD card

Follow instructions in this section to install a MicroSD card.

About this task

To avoid potential danger, make sure to read and follow the safety information.

Attention:

- Read "Installation Guidelines" on page 39 and "Safety inspection checklist" on page 40 to make sure that you work safely.
- Touch the static-protective package that contains the component to any unpainted metal surface on the node and chassis; then, take the component out of the package and place it on a static-protective surface.

Procedure

Step 1. Locate the MicroSD socket on the system board.

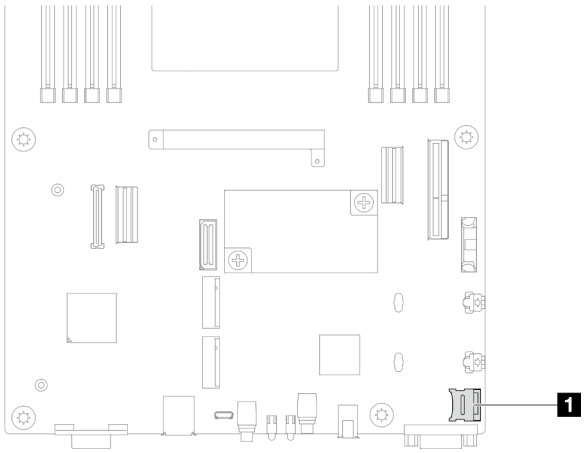

Figure 70. Location of the MicroSD socket

Step 2. Install the MicroSD card to the system board.

a. ❶ Place the MicroSD card into the socket.

b. ❷ Close the socket lid.

c. ❸ Slide the socket lid to the lock position.

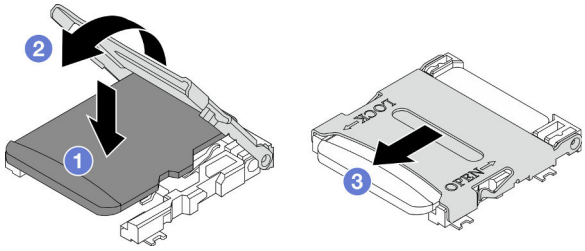

Figure 71. Installation of a MicroSD card

After you finish

1. Reconnect all the required cables to the drive backplane; then, reinstall the drive cage assembly to the node (see "E3.S drive backplane cable routing" on page 178 and "Install a drive cage assembly" on page 87).
2. Make sure that all the required cables are routed and connected correctly; then, reinstall the top cover (see "Install the top cover" on page 171).
3. Reinstall the node into the chassis (see "Install a node to the chassis" on page 74).
4. Make sure that the required power supply units are installed and power cords are connected; then, power on the node (see "Install a hot-swap power supply" on page 58 and "Power on the node" on page 46).
5. Proceed to complete the parts replacement (see "Complete the parts replacement" on page 172).

Demo video

https://www.youtube.com/watch?v=bMsk73ABpKY

OCP module replacement

Follow instructions in this section to remove or install the OCP module.

Notes:

- Depending on the specific configuration, the node might not come with this component.
- When no OCP module is installed, make sure to install an OCP filler in the OCP slot.

Remove the OCP module

Follow instructions in this section to remove to remove the OCP module.

About this task

To avoid potential danger, make sure to read and follow the safety information.

Attention: Read “Installation Guidelines” on page 39 and “Safety inspection checklist” on page 40 to make sure that you work safely.

Procedure

Step 1. Make preparations for this task.

a. Power off the node (see “Power off the node” on page 46).

Step 2. Remove the OCP module.

a. ❶ Loosen the thumbscrew that secures the OCP module. Use a screwdriver if necessary.

b. ❷ Grasp the handle and pull out the OCP module.

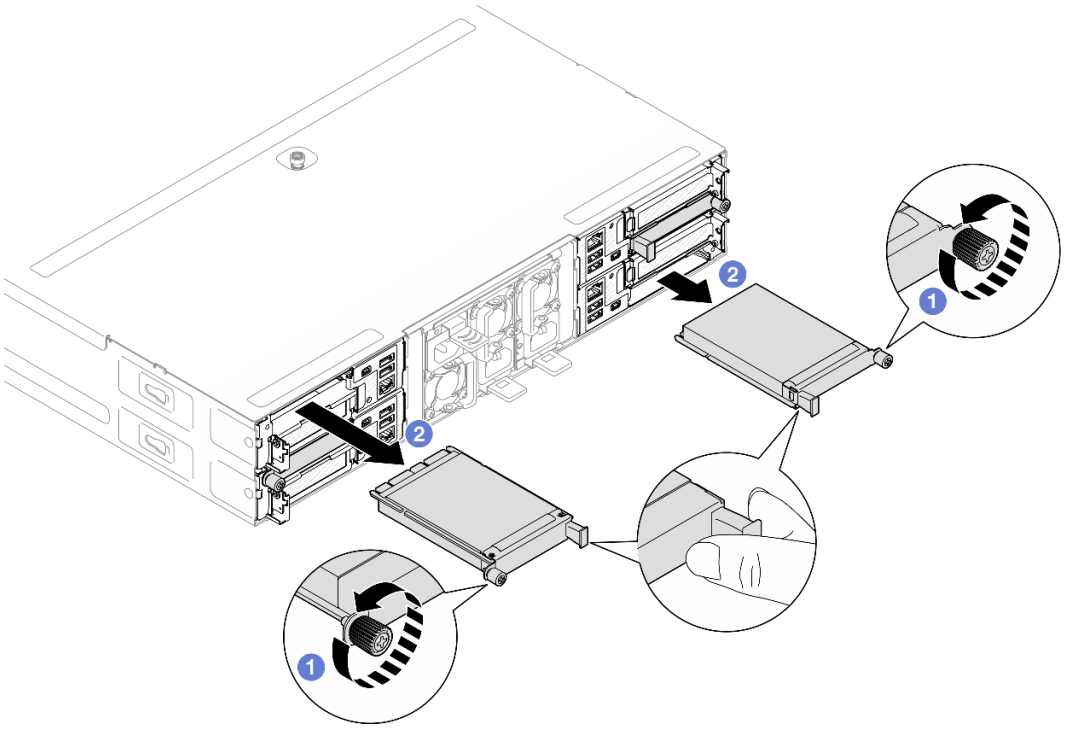

Figure 72. Removal of the rear OCP module

After you finish

1. Install a replacement unit or filler (see “Install an OCP module” on page 113).
2. If you are instructed to return the component or optional device, follow all packaging instructions, and use any packaging materials for shipping that are supplied to you.

Demo video

https://www.youtube.com/watch?v=juGnVvv0CR4

Install an OCP module

Follow instructions in this section to install an OCP module.

About this task

To avoid potential danger, make sure to read and follow the safety information.

Attention:

- Read “Installation Guidelines” on page 39 and “Safety inspection checklist” on page 40 to make sure that you work safely.
- Touch the static-protective package that contains the component to any unpainted metal surface on the node and chassis; then, take the component out of the package and place it on a static-protective surface.
- **Firmware and driver download**: You might need to update the firmware or driver after replacing a component.
  - Go to https://datacentersupport.lenovo.com/products/servers/thinksystem/sd530v3/7dd3/downloads/driver-list to see the latest firmware and driver updates for your server.
  - Go to “Update the firmware” on page 189 for more information on firmware updating tools.
- To avoid throttling, make sure to adopt passive Direct Attach cables when network adapters with 100GbE or higher speed are installed.

Procedure

Step 1. If an OCP filler has been installed, remove it from the OCP slot.

Step 2. Install the OCP module.

a. ❶ Insert and push the OCP module into the slot until it is fully seated.

b. ❷ Tighten the thumbscrew to secure the OCP module. Use a screwdriver if necessary.

Note: Make sure to fully install the OCP module and securely tighten the thumbscrew. Otherwise, the OCP module may not get full connection and may not function.

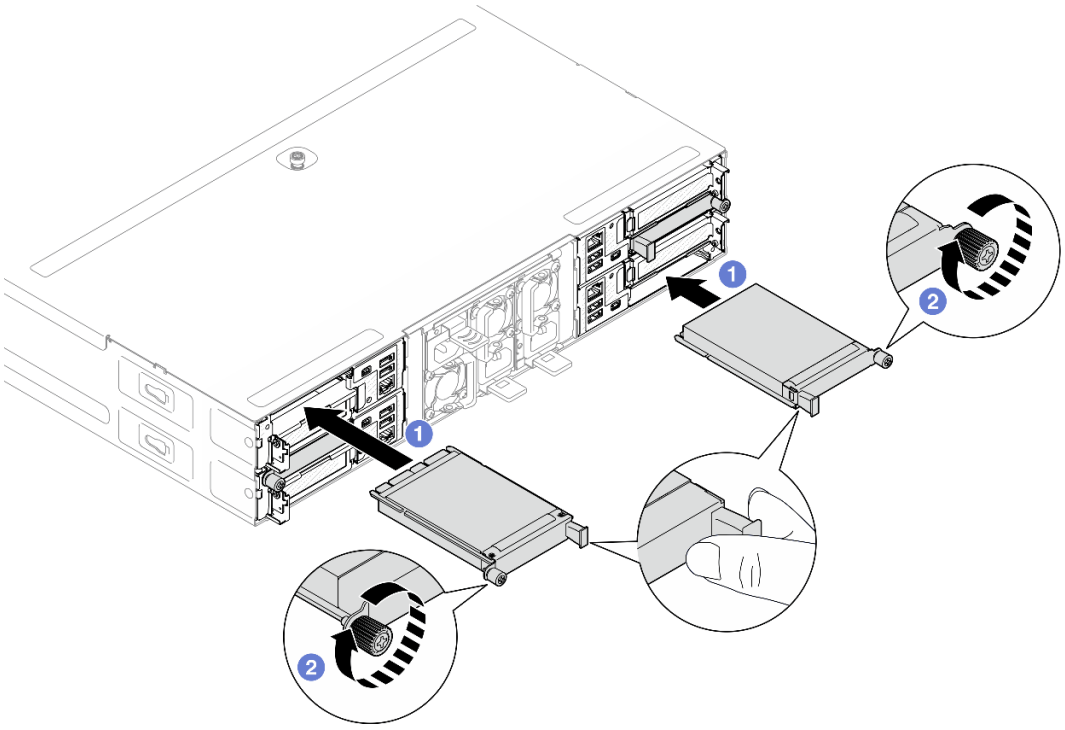

Figure 73. Installation of rear OCP module

After you finish

1. Power on the node (see “Power on the node” on page 46).
2. Proceed to complete the parts replacement (see “Complete the parts replacement” on page 172).

Demo video

https://www.youtube.com/watch?v=0gO9RwUXBfw

PCIe riser assembly and adapter replacement

Follow instructions in this section to remove or install the PCIe riser assembly and PCIe adapter.

Notes:

- Depending on the specific configuration, the node might not come with this component.
- When there is no PCIe riser assembly installed in the node, make sure to install a PCIe riser filler on the rear of the node.

Remove the PCIe riser assembly

Follow instructions in this section to remove the PCIe riser assembly.

About this task

To avoid potential danger, make sure to read and follow the safety information.

Attention: Read “Installation Guidelines” on page 39 and “Safety inspection checklist” on page 40 to make sure that you work safely.

Note: Depending on the specific configuration, the hardware might look slightly different from the illustrations in this section.

Procedure

Step 1. Make preparations for this task.

a. Power off the node (see "Power off the node" on page 46); then, disconnect all external cables from the node.

b. Remove the node from the chassis (see "Remove a node from the chassis" on page 70); then, carefully lay the node on a flat, static-protective surface, orienting the node with the front toward you.

Notes:

- When removing the node, note the node tray number and make sure to install the node in the same tray from which it was removed. Reinstalling the node into a different tray requires the node to be reconfigured.
- For safety, make sure to hold the node with both hands when lifting the node.

c. Remove the top cover (see "Remove the top cover" on page 169).

d. If the GPU air duct is installed in the node, remove it (see "Remove the GPU air duct" on page 90).

Step 2. Remove the PCIe riser assembly from the node.

a. ❶ Loosen the captive screw that secures the PCIe riser assembly to the node.

b. ❷ Carefully hold the PCIe riser assembly by its edges and lift it out of the node.

c. ❸ Disconnect the PCIe riser power cable from the riser.

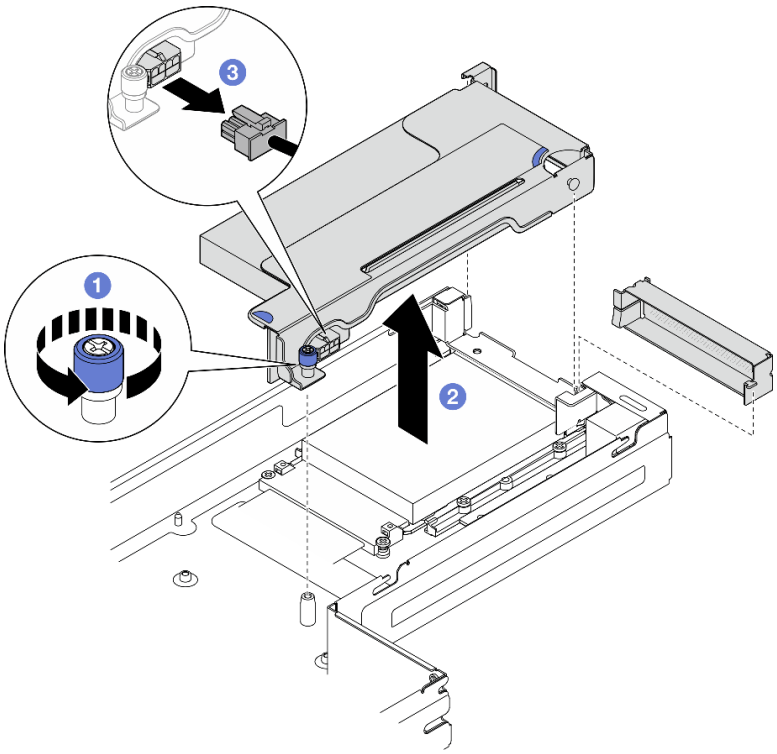

Figure 74. Removal of the PCIe riser assembly

Step 3. If necessary, disconnect all the PCIe riser cables from the system board (see “PCIe riser cable routing” on page 180); then, lay the PCIe riser assembly on a flat, static-protective surface.

After you finish

1. To replace a PCIe adapter, see “Remove a PCIe adapter” on page 116 and “Install a PCIe adapter” on page 118.
2. If necessary, replace or remove the PCIe riser card from the riser cage.

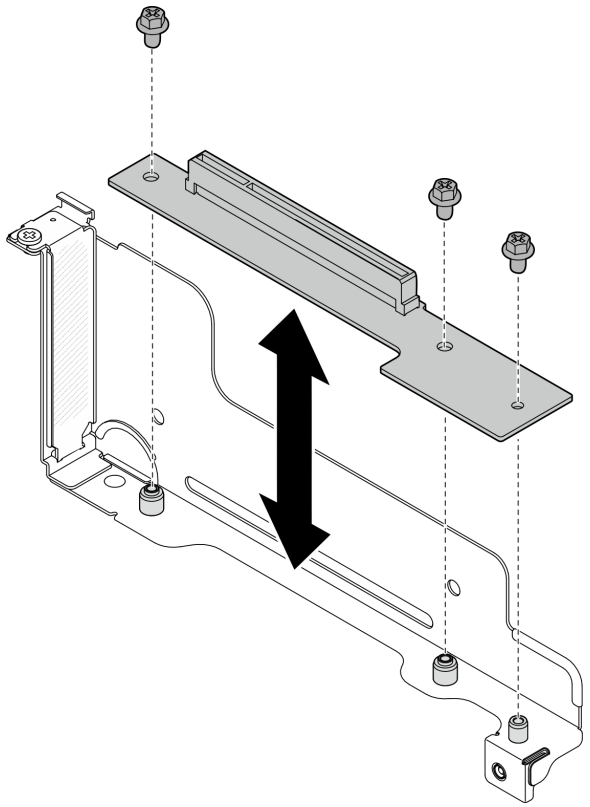

Figure 75. Replacement of the PCIe riser card

3. Install a replacement unit or filler (see “Install a PCIe riser assembly” on page 120).
4. If you are instructed to return the component or optional device, follow all packaging instructions, and use any packaging materials for shipping that are supplied to you.

Demo video

https://www.youtube.com/watch?v=moJC0En57i8

Remove a PCIe adapter

Follow instructions in this section to remove a PCIe adapter.

About this task

To avoid potential danger, make sure to read and follow the safety information.

Attention: Read “Installation Guidelines” on page 39 and “Safety inspection checklist” on page 40 to make sure that you work safely.

Note: Depending on the specific configuration, the hardware might look slightly different from the illustrations in this section.

Procedure

Step 1. Make preparations for this task.

a. Power off the node (see “Power off the node” on page 46); then, disconnect all external cables from the node.

b. Remove the node from the chassis (see “Remove a node from the chassis” on page 70); then, carefully lay the node on a flat, static-protective surface, orienting the node with the front toward you.

Notes:

- When removing the node, note the node tray number and make sure to install the node in the same tray from which it was removed. Reinstalling the node into a different tray requires the node to be reconfigured.
- For safety, make sure to hold the node with both hands when lifting the node.

c. Remove the top cover (see “Remove the top cover” on page 169).

d. If the GPU air duct is installed in the node, remove it (see “Remove the GPU air duct” on page 90).

e. Remove the PCIe riser assembly from the node and, if necessary, disconnect the PCIe cables from the system board (see “Remove the PCIe riser assembly” on page 114 and “PCIe riser cable routing” on page 180).

Step 2. Remove the PCIe adapter from the PCIe riser cage.

a. 1 Remove the screw that secures the PCIe adapter to the PCIe riser.

b. 2 Grasp the PCIe adapter by its edges and carefully pull it out of the PCIe slot.

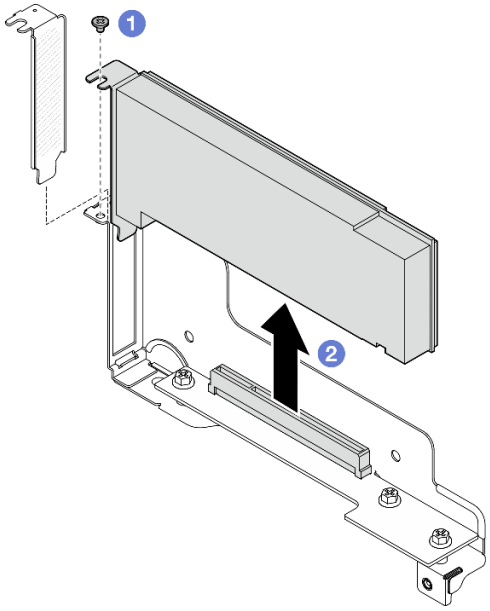

Figure 76. Removal of a PCIe adapter

After you finish

1. Install a replacement unit or filler (see “Install a PCIe adapter” on page 118).

2. If you are instructed to return the component or optional device, follow all packaging instructions, and use any packaging materials for shipping that are supplied to you.

Demo video

https://www.youtube.com/watch?v=moJC0En57i8

Install a PCIe adapter

Follow instructions in this section to install a PCIe adapter.

About this task

To avoid potential danger, make sure to read and follow the safety information.

Attention:

- Read “Installation Guidelines” on page 39 and “Safety inspection checklist” on page 40 to make sure that you work safely.
- Touch the static-protective package that contains the component to any unpainted metal surface on the node and chassis; then, take the component out of the package and place it on a static-protective surface.

Procedure

Step 1. If the PCIe riser card is not installed in the riser cage, install it now.

a. Align the screw holes of the PCIe riser card with the corresponding holes on the riser cage; then, insert the PCIe riser card into place.

b. Tighten the screws to secure the PCIe riser card to the PCIe riser cage.

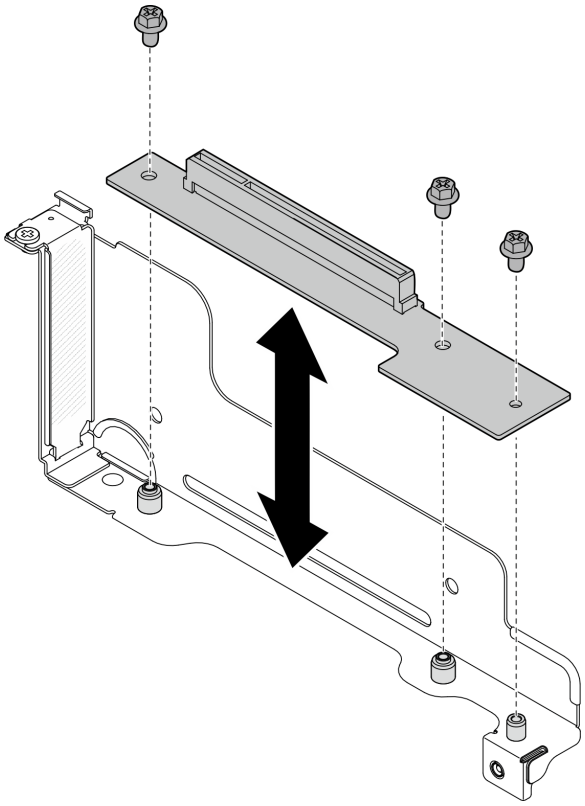

Figure 77. Replacement of the PCIe riser card

Step 2. If a PCIe filler is installed in the slot, remove it.

Step 3. Install the PCIe adapter to the PCIe slot.

a. ❶ Align the adapter with the PCIe connector; then, carefully press the adapter straight into the connector until it is securely seated.

b. ❷ Tighten the screw to secure the adapter.

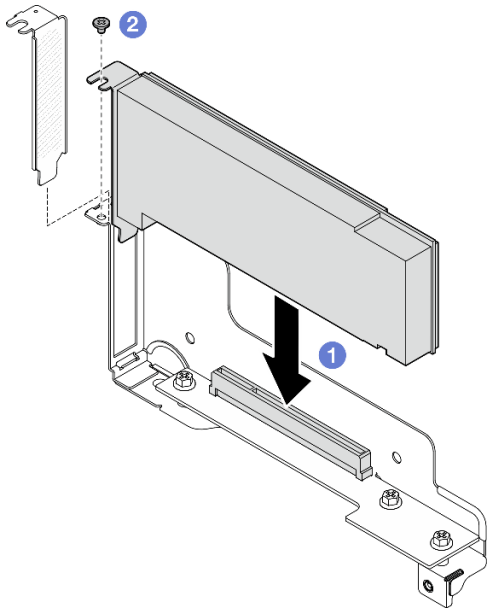

Figure 78. Installation of a PCIe adapter

After you finish

1. If necessary, reinstall the PCIe riser assembly to the node and reconnect the required PCIe cables to the system board (see “Install a PCIe riser assembly” on page 120 and Chapter 6 “Internal cable routing” on page 175).
2. If necessary, reinstall the GPU air duct (see “Install a GPU air duct” on page 91).
3. Make sure that all the required cables are routed and connected correctly; then, reinstall the top cover (see “Install the top cover” on page 171).
4. Reinstall the node into the chassis (see “Install a node to the chassis” on page 74).
5. Make sure that the required power supply units are installed and power cords are connected; then, power on the node (see “Install a hot-swap power supply” on page 58 and “Power on the node” on page 46).
6. Proceed to complete the parts replacement (see “Complete the parts replacement” on page 172).

Demo video

https://www.youtube.com/watch?v=Fq30T-pc70A

Install a PCIe riser assembly

Follow instructions in this section to install a PCIe riser assembly.

About this task

To avoid potential danger, make sure to read and follow the safety information.

Attention:

- Read “Installation Guidelines” on page 39 and “Safety inspection checklist” on page 40 to make sure that you work safely.

- Touch the static-protective package that contains the component to any unpainted metal surface on the node and chassis; then, take the component out of the package and place it on a static-protective surface.

Procedure

Step 1. If a PCIe riser filler has been installed, remove the screw and then remove the filler.

Step 2. If the PCIe riser card is not installed in the riser cage, install it now.

a. Align the screw holes of the PCIe riser card with the corresponding holes on the riser cage; then, insert the PCIe riser card into place.

b. Tighten the screws to secure the PCIe riser card to the PCIe riser cage.

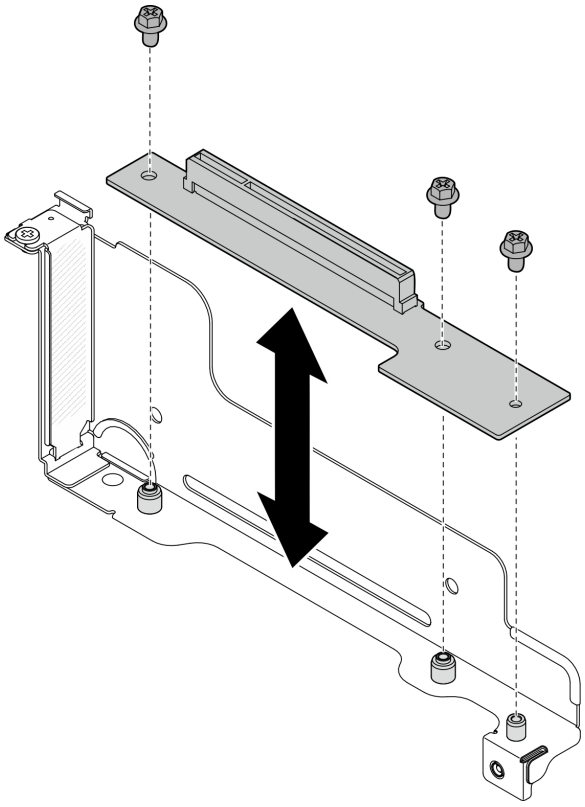

Figure 79. Replacement of the PCIe riser card

Step 3. Install the required PCIe adapter (see “Install a PCIe adapter” on page 118).

Step 4. If the PCIe cables have been disconnected from the system board, reconnect these cables to the system board (see “PCIe riser cable routing” on page 180).

Step 5. Install the PCIe riser assembly to the node.

a. ❶ Connect the PCIe riser power cable to the riser.

b. ❷ Align the edges of the PCIe riser assembly with the edges of the node; then, place the PCIe riser assembly into place until it is securely seated.

c. ❸ Tighten the captive screw to secure the PCIe riser assembly to the node.

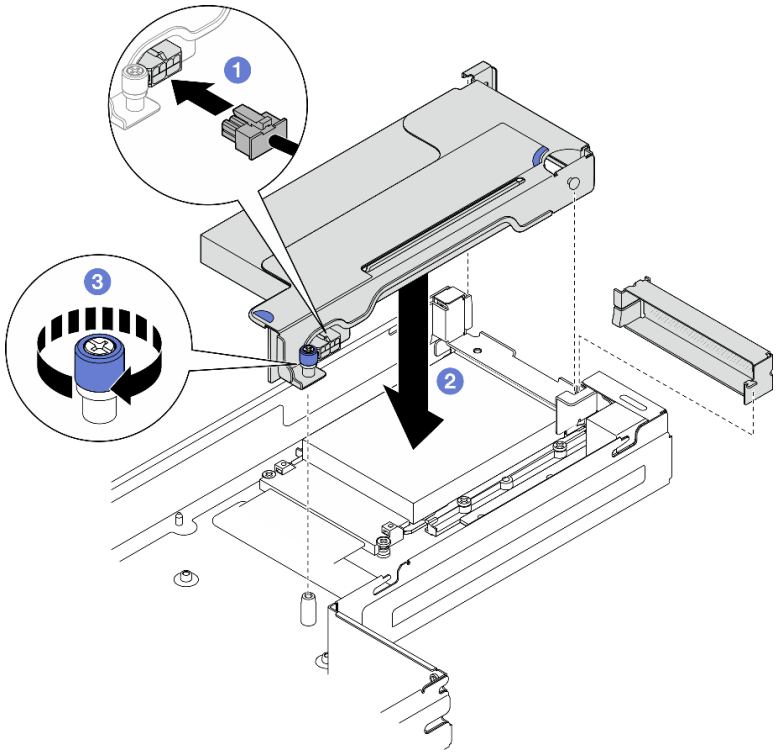

Figure 80. Installation of the PCIe riser assembly

After you finish

1. If necessary, reinstall the GPU air duct (see “Install a GPU air duct” on page 91).
2. Make sure that all the required cables are routed and connected correctly; then, reinstall the top cover (see “Install the top cover” on page 171).
3. Reinstall the node into the chassis (see “Install a node to the chassis” on page 74).
4. Make sure that the required power supply units are installed and power cords are connected; then, power on the node (see “Install a hot-swap power supply” on page 58 and “Power on the node” on page 46).
5. Proceed to complete the parts replacement (see “Complete the parts replacement” on page 172).

Demo video

https://www.youtube.com/watch?v=Fq30T-pc70A

Power bus bar replacement

Follow instructions in this section to remove or install the power bus bar.

Remove the power bus bar

Follow instructions in this section to remove the power bus bar.

About this task

To avoid potential danger, make sure to read and follow the safety information.

Attention: Read “Installation Guidelines” on page 39 and “Safety inspection checklist” on page 40 to make sure that you work safely.

Procedure

Step 1. Make preparations for this task.

a. Power off the node (see “Power off the node” on page 46); then, disconnect all external cables from the node.

b. Remove the node from the chassis (see “Remove a node from the chassis” on page 70); then, carefully lay the node on a flat, static-protective surface, orienting the node with the front toward you.

Notes:

- When removing the node, note the node tray number and make sure to install the node in the same tray from which it was removed. Reinstalling the node into a different tray requires the node to be reconfigured.
- For safety, make sure to hold the node with both hands when lifting the node.

c. Remove the top cover (see “Remove the top cover” on page 169).

d. If the GPU air duct is installed in the node, remove it (see “Remove the GPU air duct” on page 90).

e. If the PCIe riser assembly is installed, remove it from the node and disconnect the PCIe cables from the system board (see “Remove the PCIe riser assembly” on page 114 and Chapter 6 “Internal cable routing” on page 175).

Step 2. Remove the six outer screws from the power bus bar.

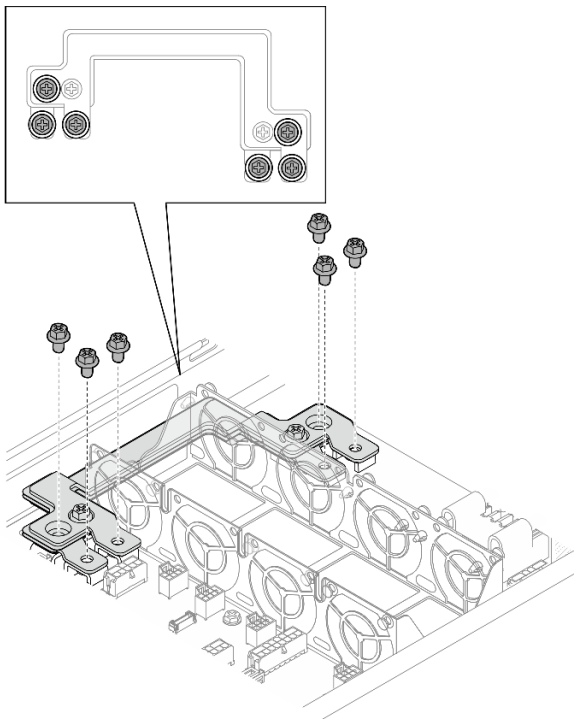

Figure 81. Removal of outer screws of the power bus bar

Step 3. Remove the power bus bar.

a. 1 Remove the main PDB screw from the power bus bar.
b. 2 Remove the main system board screw from the power bus bar.
c. 3 Lift the power bus bar out of the node.

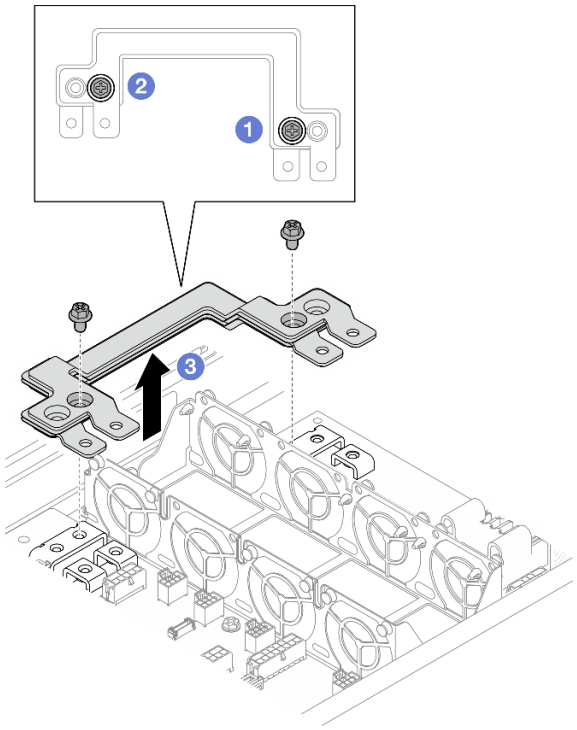

Figure 82. Removal of the power bus bar

After you finish

1. Install a replacement unit (see "Install a power bus bar" on page 124).
2. If you are instructed to return the component or optional device, follow all packaging instructions, and use any packaging materials for shipping that are supplied to you.

Demo video

https://www.youtube.com/watch?v=UfqO1sAUxZY

Install a power bus bar

Follow instructions in this section to install a power bus bar.

About this task

To avoid potential danger, make sure to read and follow the safety information.

Attention:

- Read "Installation Guidelines" on page 39 and "Safety inspection checklist" on page 40 to make sure that you work safely.
- Touch the static-protective package that contains the component to any unpainted metal surface on the node and chassis; then, take the component out of the package and place it on a static-protective surface.

Note: For reference, the torque required for the screws to be fully tightened to the power bus bar is 12 +/- 0.5 lbf-in.

Procedure

Step 1. Install the power bus bar to the node.

a. ❶ Align the screw holes on the power bus bar with the corresponding screw holes on the system board and power distribution board; then, lower the power bus bar into place.

b. ❷ Tighten the main system board screw to secure the power bus bar to the system board.

c. ❸ Tighten the main PDB screw to secure the power bus bar to the power distribution board.

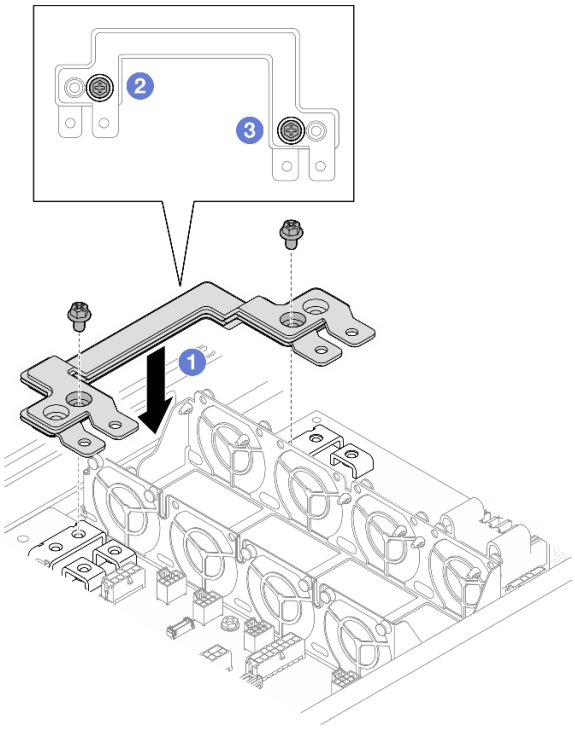

Figure 83. Installation of the power bus bar

Step 2. Tighten the six outer screws to secure the power bus bar.

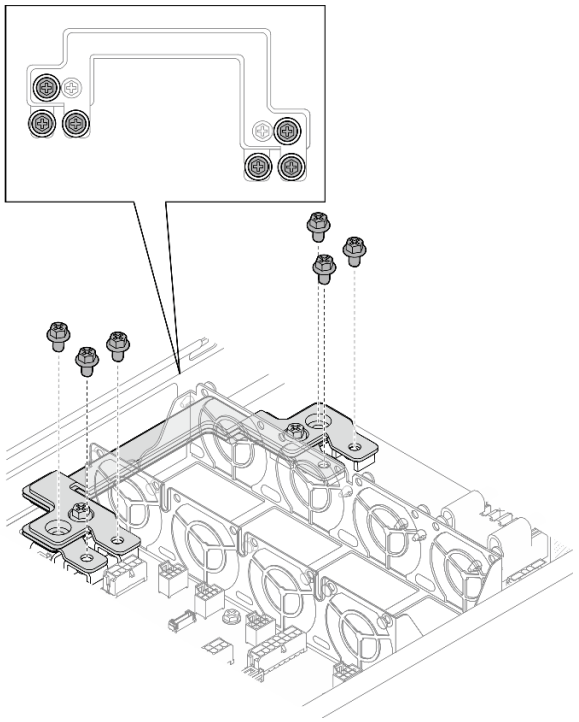

Figure 84. Installation of the power bus bar outer screws

After you finish

1. If necessary, reinstall the PCIe riser assembly to the node and reconnect the required PCIe cables to the system board (see “Install a PCIe riser assembly” on page 120 and Chapter 6 “Internal cable routing” on page 175).
2. If necessary, reinstall the GPU air duct (see “Install a GPU air duct” on page 91).
3. Make sure that all the required cables are routed and connected correctly; then, reinstall the top cover (see “Install the top cover” on page 171).
4. Reinstall the node into the chassis (see “Install a node to the chassis” on page 74).
5. Make sure that the required power supply units are installed and power cords are connected; then, power on the node (see “Install a hot-swap power supply” on page 58 and “Power on the node” on page 46).
6. Proceed to complete the parts replacement (see “Complete the parts replacement” on page 172).

Demo video

https://www.youtube.com/watch?v=ZNuxjRWqiJo

Power distribution board replacement

Follow instructions in this section to remove or install the power distribution board.

Remove the power distribution board

Follow instructions in this section to remove the power distribution board.

About this task

To avoid potential danger, make sure to read and follow the safety information.

Attention: Read “Installation Guidelines” on page 39 and “Safety inspection checklist” on page 40 to make sure that you work safely.

Procedure

Step 1. Make preparations for this task.

a. Power off the node (see “Power off the node” on page 46); then, disconnect all external cables from the node.

b. Remove the node from the chassis (see “Remove a node from the chassis” on page 70); then, carefully lay the node on a flat, static-protective surface, orienting the node with the front toward you.

Notes:

- When removing the node, note the node tray number and make sure to install the node in the same tray from which it was removed. Reinstalling the node into a different tray requires the node to be reconfigured.
- For safety, make sure to hold the node with both hands when lifting the node.

c. Remove the top cover (see “Remove the top cover” on page 169).

d. If the GPU air duct is installed in the node, remove it (see “Remove the GPU air duct” on page 90).

e. If the PCIe riser assembly is installed, remove it from the node and disconnect the PCIe cables from the system board (see “Remove the PCIe riser assembly” on page 114 and Chapter 6 “Internal cable routing” on page 175).

f. Remove the power bus bar (see “Remove the power bus bar” on page 122).

Step 2. Disconnect the power cable from the power distribution board.

Step 3. Remove the power distribution board from the node.

a. ❶ Remove the five screws that secure the power distribution board to the node.

b. ❷ Slightly pull the power distribution board toward the front of the node; then, lift it out of the node.

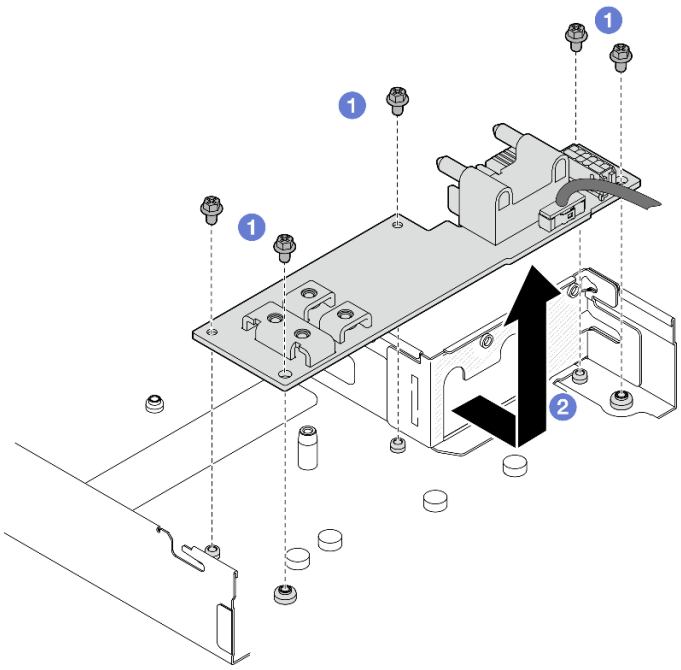

Figure 85. Removal of the power distribution board

Step 4. Disconnect the sideband cable from the power distribution board.

After you finish

1. Install a replacement unit (see “Install a power distribution board” on page 128).
2. If you are instructed to return the component or optional device, follow all packaging instructions, and use any packaging materials for shipping that are supplied to you.

Demo video

https://www.youtube.com/watch?v=D6o1bE6vJuI

Install a power distribution board

Follow instructions in this section to install a power distribution board.

About this task

To avoid potential danger, make sure to read and follow the safety information.

Attention:

- Read “Installation Guidelines” on page 39 and “Safety inspection checklist” on page 40 to make sure that you work safely.
- Touch the static-protective package that contains the component to any unpainted metal surface on the node and chassis; then, take the component out of the package and place it on a static-protective surface.

Procedure

Step 1. Connect the sideband cable to the power distribution board.

Step 2. Install the power distribution board.

a. 1 Align the screws holes on the power distribution board with the screw holes on the node; then, lower and insert the power distribution board into place.

b. 2 Tighten the five screws to secure the power distribution board to the node.

Note: Make sure that the standoffs are securely seated in the holes of the power distribution board.

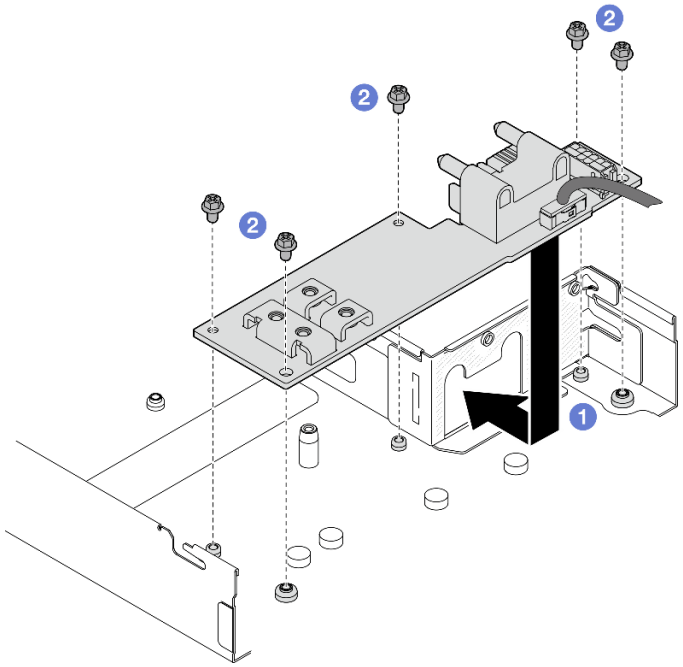

Figure 86. Installation of a power distribution board

Step 3. Connect the power cable to the power distribution board; then, reconnect the power distribution board cables to the system board (see "Power distribution board cable routing" on page 182).

After you finish

1. Reinstall the power bus bar (see "Install a power bus bar" on page 124).
2. If necessary, reinstall the PCIe riser assembly to the node and reconnect the required PCIe cables to the system board (see "Install a PCIe riser assembly" on page 120 and Chapter 6 "Internal cable routing" on page 175).
3. If necessary, reinstall the GPU air duct (see "Install a GPU air duct" on page 91).
4. Make sure that all the required cables are routed and connected correctly; then, reinstall the top cover (see "Install the top cover" on page 171).
5. Reinstall the node into the chassis (see "Install a node to the chassis" on page 74).
6. Make sure that the required power supply units are installed and power cords are connected; then, power on the node (see "Install a hot-swap power supply" on page 58 and "Power on the node" on page 46).
7. Proceed to complete the parts replacement (see "Complete the parts replacement" on page 172).

Demo video

https://www.youtube.com/watch?v=ifZF5lrX5uc

Processor and heat sink replacement (trained technician only)

Follow instructions in this section to remove or install a processor and heat sink module (PHM).

Important: This task must be operated by trained technicians.

Attention: Before reusing a processor or heat sink, make sure to use Lenovo proven alcohol cleaning pad and thermal grease.

Remove the processor and heat sink

This task has instructions for removing the assembled processor and heat sink, known as a processor-heat-sink module (PHM). This task requires a Torx T30 driver. This procedure must be executed by a trained technician.

Important: This task must be operated by trained technicians.

About this task

To avoid potential danger, make sure to read and follow the safety information.

Attention:

- Read “Installation Guidelines” on page 39 and “Safety inspection checklist” on page 40 to make sure that you work safely.
- To transfer Intel® On Demand Suite from the defective processor to the new processor, read the PPIN of the defective processor before powering off the system. For more information, see “Enable Intel® On Demand” on page 197.
- Each processor socket must always contain a cover or a PHM. When removing or installing a PHM, protect the empty processor sockets with a cover.
- Do not touch the processor socket or processor contacts. Processor-socket contacts are very fragile and easily damaged. Contaminants on the processor contacts, such as oil from your skin, can cause connection failures.
- Do not allow the thermal grease on the processor or heat sink to come in contact with anything. Contact with any surface can compromise the thermal grease, rendering it ineffective. Thermal grease can damage components, such as the electrical connectors in the processor socket.
- Remove and install only one PHM at a time. If the system supports multiple processors, install the PHMs starting with the first processor socket.

Note: The heat sink, processor, and processor carrier for the node might look different from those shown in the illustrations in this section.

The following illustration shows the components of the PHM.

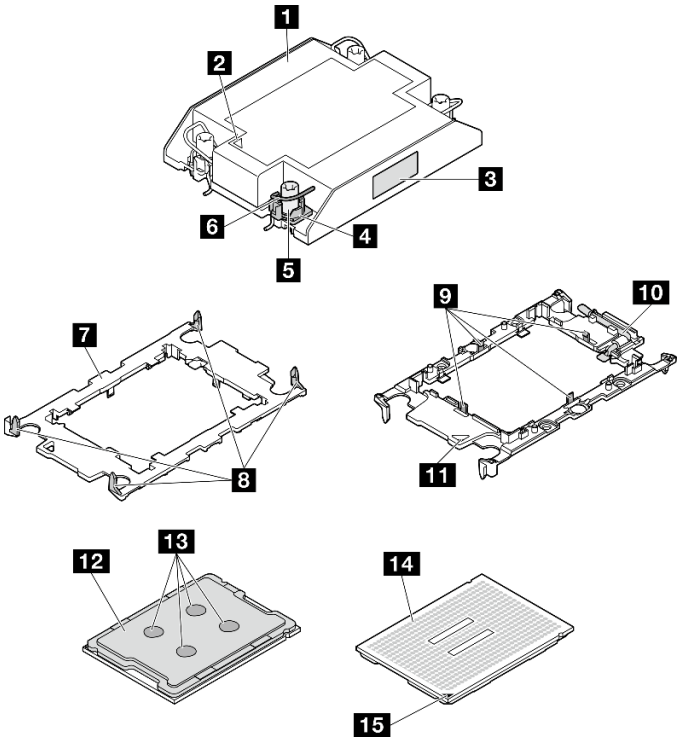

Figure 87. PHM components

1 Heat sink	9 Clips to secure processor in carrier
2 Heat sink triangular mark	10 Processor ejector handle
3 Processor identification label	11 Carrier triangular mark
4 Nut and wire bail retainer	12 Processor heat spreader
5 Torx T30 nut	13 Thermal grease
6 Anti-tilt wire bail	14 Processor contacts
7 Processor carrier	15 Processor triangular mark
8 Clips to secure carrier to heat sink	

Procedure

Step 1. Make preparations for this task.

a. Power off the node (see “Power off the node” on page 46); then, disconnect all external cables from the node.

b. Remove the node from the chassis (see “Remove a node from the chassis” on page 70); then, carefully lay the node on a flat, static-protective surface, orienting the node with the front toward you.

Notes:

- When removing the node, note the node tray number and make sure to install the node in the same tray from which it was removed. Reinstalling the node into a different tray requires the node to be reconfigured.
- For safety, make sure to hold the node with both hands when lifting the node.

c. Remove the top cover (see “Remove the top cover” on page 169).

d. For one-processor configuration, remove the 1U standard heat sink or 1U performance heat sink that is installed on the front of the node.

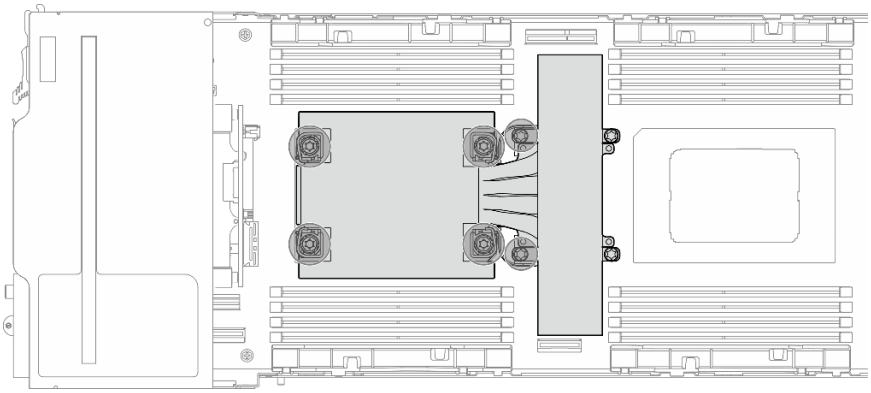

Figure 88. PHM location for one-processor configuration

e. For two-processor configuration, remove the 1U standard heat sink that is installed on the front of the node, or the 1U performance heat sink that is installed on the rear of the node.

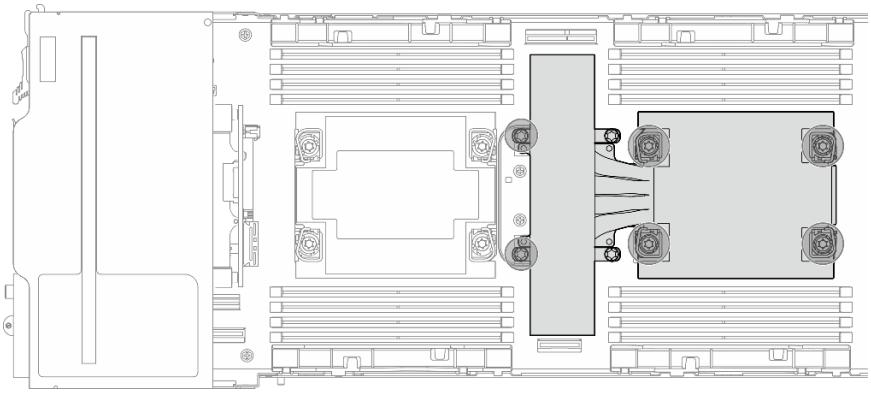

Figure 89. PHM location for two-processor configuration

Step 2. Remove the PHM from the system board.

Important:

- Do not touch the contacts on the processor contacts. Contaminants on the processor contacts, such as oil from your skin, can cause connection failures.
- Keep the processor socket clean from any object to prevent possible damages.
- Do not allow the thermal grease on the processor or heat sink to come in contact with anything. Contact with any surface can compromise the thermal grease, rendering it ineffective. Thermal grease can damage components, such as the electrical connectors in the processor socket.

a. 1 Fully loosen the Torx T30 nuts on the PHM ***in the removal sequence shown*** on the heat-sink label.

Note: For reference, the torque required for the screws to be fully tightened/removed is 10+/- 2.0 lbf-in, 1.1+/- 0.2 N-m.

Attention: To prevent damage to components, make sure to follow the indicated tightening/loosening sequence.

b. 2 Rotate the anti-tilt wire bails inward.

c. 3 Carefully lift the PHM from the processor socket. If the PHM cannot be fully lifted out of the socket, further loosen the Torx T30 nuts and try lifting the PHM again.

Figure 90. Removal of the 1U Standard PHM

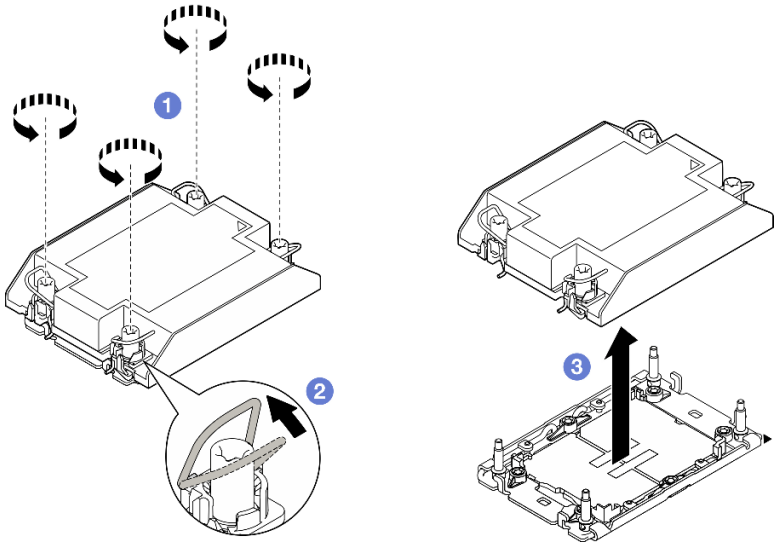

Figure 91. Removal of the 1U Performance PHM from Processor 1

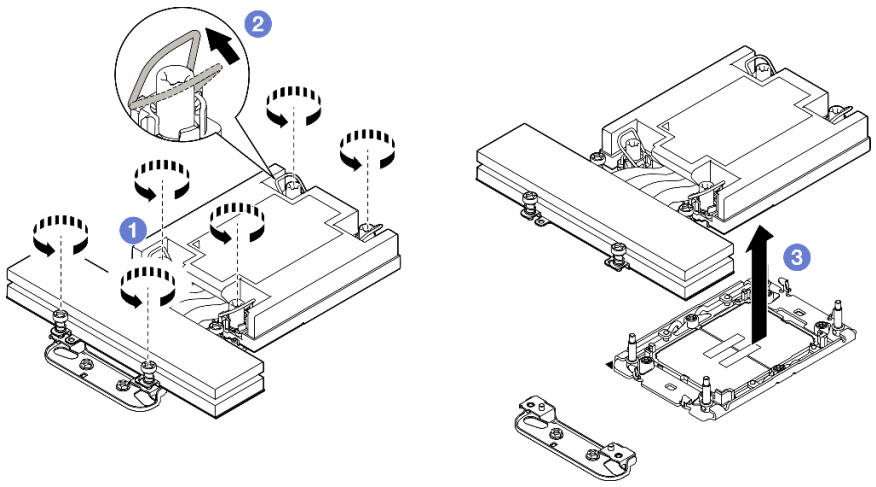

Figure 92. Removal of the 1U Performance PHM from Processor 2

Step 3. Remove the heat sink support bracket if necessary.

a. ❶ Loosen the two screws that secure the support bracket.

b. ❷ Hold the support bracket and remove it from the system board.

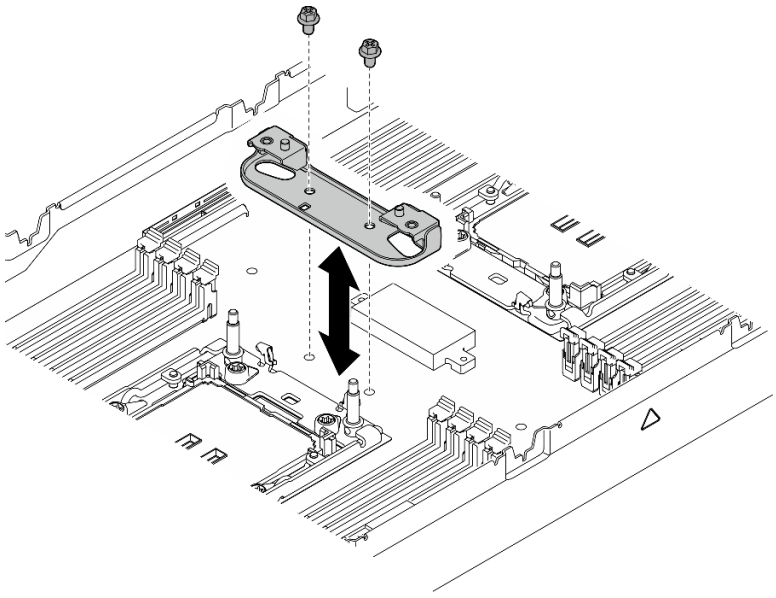

Figure 93. Heat sink support bracket replacement

After you finish

1. Each processor socket must always contain a cover or a PHM. Protect an empty processor socket with a cover or install a new PHM.
2. If you are removing the PHM as part of a system board replacement, set the PHM aside.
3. If you are reusing the processor or heat sink, separate the processor from its retainer. See “Separate the processor from carrier and heat sink” on page 135.
4. Install a replacement unit (see “Install a processor and heat sink” on page 136).
5. If you are instructed to return the component or optional device, follow all packaging instructions, and use any packaging materials for shipping that are supplied to you.

6. To transfer Intel® On Demand Suite from the defective processor to the new processor, see “Enable Intel® On Demand” on page 197.

Demo video

https://www.youtube.com/watch?v=CUjXM_Nh7sE

Separate the processor from carrier and heat sink

This task has instructions for separating a processor and its carrier from an assembled processor and heat sink, known as a processor-heat-sink module (PHM). This procedure must be executed by a trained technician.

About this task

To avoid potential danger, make sure to read and follow the safety information.

Attention: Read “Installation Guidelines” on page 39 and “Safety inspection checklist” on page 40 to make sure that you work safely.

Important:

- Do not touch the contacts on the processor contacts. Contaminants on the processor contacts, such as oil from your skin, can cause connection failures.
- Keep the processor socket clean from any object to prevent possible damages.
- Do not allow the thermal grease on the processor or heat sink to come in contact with anything. Contact with any surface can compromise the thermal grease, rendering it ineffective. Thermal grease can damage components, such as the electrical connectors in the processor socket.

Note: The heat sink, processor, and processor carrier for the node might look different from those shown in the illustrations in this section.

Procedure

Step 1. Separate the processor from the heat sink and carrier.

a. ❶ Lift the handle to release the processor from the carrier.

b. ❷ Hold the processor by its edges; then, lift the processor from the heat sink and carrier.

c. ❸ Without putting the processor down, wipe the thermal grease from the top of the processor with an alcohol cleaning pad; then, place the processor on a static protective surface with the processor-contact side up.

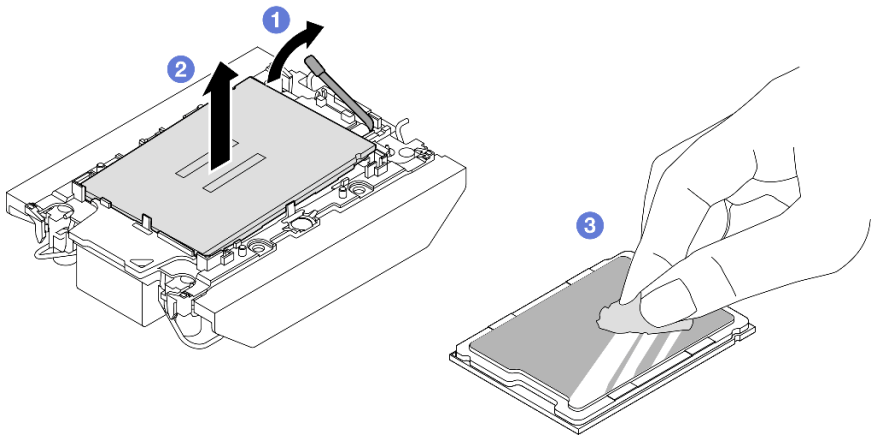

Figure 94. Separating a processor carrier from the heat sink

Note: Do not touch the contacts on the processor.

Step 2. Separate the processor carrier from the heat sink.

a. 1 Release the retaining clips from the heat sink.

b. 2 Lift the carrier from the heat sink.

c. 3 Wipe the thermal grease from the bottom of the heat sink with an alcohol cleaning pad.

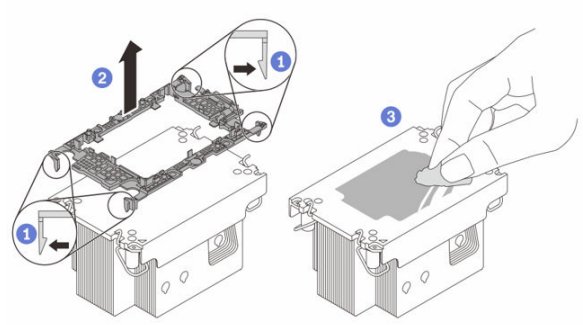

Figure 95. Separating a processor carrier from the heat sink

Note: The processor carrier will be discarded and replaced with a new one.

After you finish

1. Install the PHM (see “Install a processor and heat sink” on page 136).
2. If you are instructed to return the component or optional device, follow all packaging instructions, and use any packaging materials for shipping that are supplied to you.

Demo video

https://www.youtube.com/watch?v=CUjXM_Nh7sE

Install a processor and heat sink

This task has instructions for installing an assembled processor and heat sink, known as a processor-heat-sink module (PHM). This task requires a Torx T30 driver. This procedure must be executed by a trained technician.

Important: This task must be operated by trained technicians.

About this task

To avoid potential danger, make sure to read and follow the safety information.

Attention:

- Read "Installation Guidelines" on page 39 and "Safety inspection checklist" on page 40 to make sure that you work safely.
- Prevent exposure to static electricity, which might lead to system halt and loss of data, by keeping static-sensitive components in their static-protective packages until installation, and handling these devices with an electrostatic-discharge wrist strap or other grounding system.
- Each processor socket must always contain a cover or a PHM. When removing or installing a PHM, protect the empty processor sockets with a cover.
- Do not touch the processor socket or processor contacts. Processor-socket contacts are very fragile and easily damaged. Contaminants on the processor contacts, such as oil from your skin, can cause connection failures.
- Do not allow the thermal grease on the processor or heat sink to come in contact with anything. Contact with any surface can compromise the thermal grease, rendering it ineffective. Thermal grease can damage components, such as the electrical connectors in the processor socket.
- Remove and install only one PHM at a time. If the system supports multiple processors, install the PHMs starting with the first processor socket.

Notes:

- The heat sink, processor, and processor carrier for your system might be different from those shown in the illustrations.
- PHMs are keyed for the socket where they can be installed and for their orientation in the socket.
- See https://serverproven.lenovo.com for a list of processors supported for your server. All processors must have the same speed, number of cores, and frequency.
- Before you install a new PHM or replacement processor, update your system firmware to the latest level. See "Update the firmware" on page 189.

Firmware and driver download: You might need to update the firmware or driver after replacing a component.

- Go to https://datacentersupport.lenovo.com/products/servers/thinksystem/sd530v3/7dd3/downloads/driver-list to see the latest firmware and driver updates for your server.
- Go to "Update the firmware" on page 189 for more information on firmware updating tools.

Make sure to install heat sink based on processor's configurations:

	One-processor configuration	Two-processor configuration
185-watt or lower	• Processor 1: Standard heat sink • Processor 2: N/A	• Processor 1: Standard heat sink • Processor 2: Performance heat sink

Greater than 185-watt, less or equal to 205-watt	• Processor 1: Performance heat sink • Processor 2: N/A	• Processor 1: Standard heat sink • Processor 2: Performance heat sink
Greater than 205-watt	• Processor 1: Performance heat sink • Processor 2: N/A	• Processor 1: N/A • Processor 2: N/A

The following illustration shows the components of the PHM.

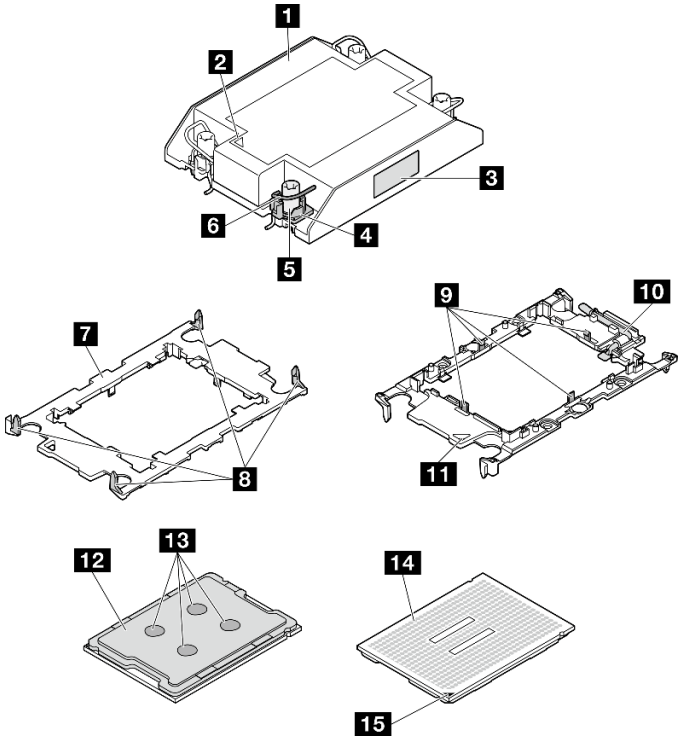

Figure 96. PHM components

1 Heat sink	9 Clips to secure processor in carrier
2 Heat sink triangular mark	10 Processor ejector handle
3 Processor identification label	11 Carrier triangular mark
4 Nut and wire bail retainer	12 Processor heat spreader
5 Torx T30 nut	13 Thermal grease
6 Anti-tilt wire bail	14 Processor contacts
7 Processor carrier	15 Processor triangular mark
8 Clips to secure carrier to heat sink	

Procedure

Step 1. Make preparations for this task.

a. Record the processor identification label.

- If you are replacing a processor and reusing the heat sink, remove the processor identification label from the heat sink and replace it with the new label that comes with the replacement processor.
- If you are replacing a heat sink and reusing the processor, remove the processor identification label from the old heat sink and place it on the new heat sink in the same location.

  Note: If you are unable to remove the label and place it on the new heat sink, or if the label is damaged during transfer, write the processor serial number from the processor identification label on the new heat sink in the same location as the label would be placed using a permanent marker.

Step 2. Install the processor in the new carrier.

Notes:

- If you are replacing the processor and reusing the heat sink, use the new carrier that comes with the new processor.
- If you are replacing the heat sink and reusing the processor, and if the new heat sink comes with two processor carriers, make sure to use the same type of carrier as the one you discarded.

1. ❶ Make sure the handle on the carrier is in the closed position.
2. ❷ Align the processor on the new carrier so that the triangular marks align; then, insert the marked end of the processor into the carrier.
3. ❸ Hold the inserted end of the processor in place; then, pivot the unmarked end of the carrier down and away from the processor.
4. ❹ Press the processor and secure the unmarked end under the clip on the carrier.
5. ❺ Carefully pivot the sides of the carrier down and away from the processor.
6. ❻ Press the processor and secure the sides under the clips on the carrier.

   Note: To prevent the processor from falling out of the carrier, keep the processor-contact side up and hold the processor-carrier assembly by the sides of the carrier.

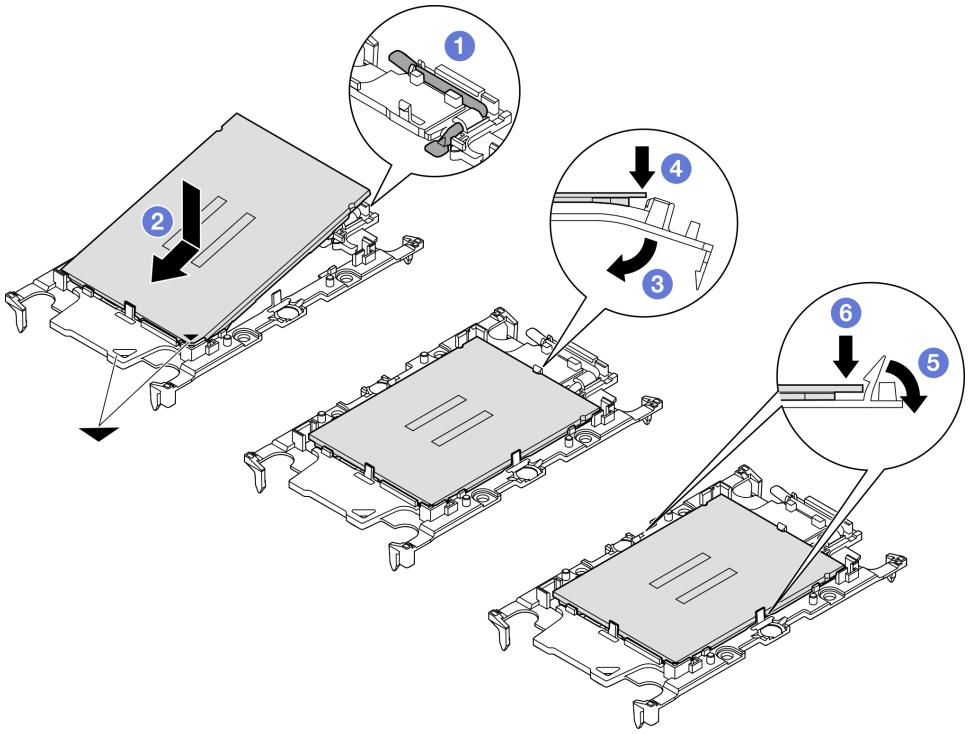

Figure 97. Installation of the processor carrier

Step 3. Apply the thermal grease.

- If you are replacing the heat sink and reusing the processor, a new heat sink comes with thermal grease and you do not need to apply new thermal grease.

  Note: To ensure the best performance, check the manufacturing date on the new heat sink and make sure it does not exceed two years. Otherwise, wipe off the existing thermal grease and apply new thermal grease.

- If you are replacing the processor and reusing the heat sink, do the following steps to apply thermal grease:

  1. If there is any old thermal grease on the heat sink, wipe off the thermal grease with an alcohol cleaning pad.
  2. Carefully place the processor and carrier in the shipping tray with the processor-contact side down. Make sure the triangular mark on the carrier is oriented in the shipping tray as shown below.
  3. Apply the thermal grease on the top of the processor with syringe by forming four uniformly spaced dots, while each dot consists of about 0.1 ml of thermal grease.

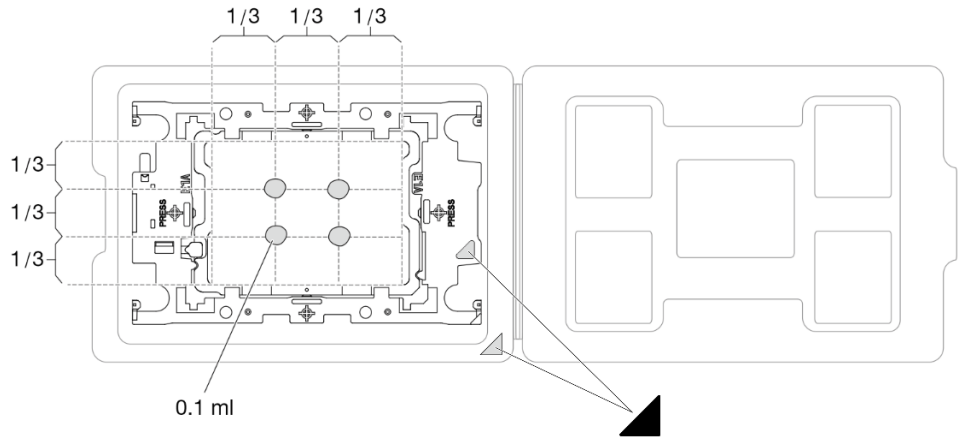

Figure 98. Thermal grease application with processor in shipping tray

Step 4. Assemble the processor and heat sink.

a. Align the triangular mark on the heat sink label with the triangular mark on the processor carrier and processor.

b. Install the heat sink onto the processor-carrier.

c. Press the carrier into place until the clips at all four corners engage.

d. Visually inspect to make sure that there is no gap between the processor carrier and the heat sink.

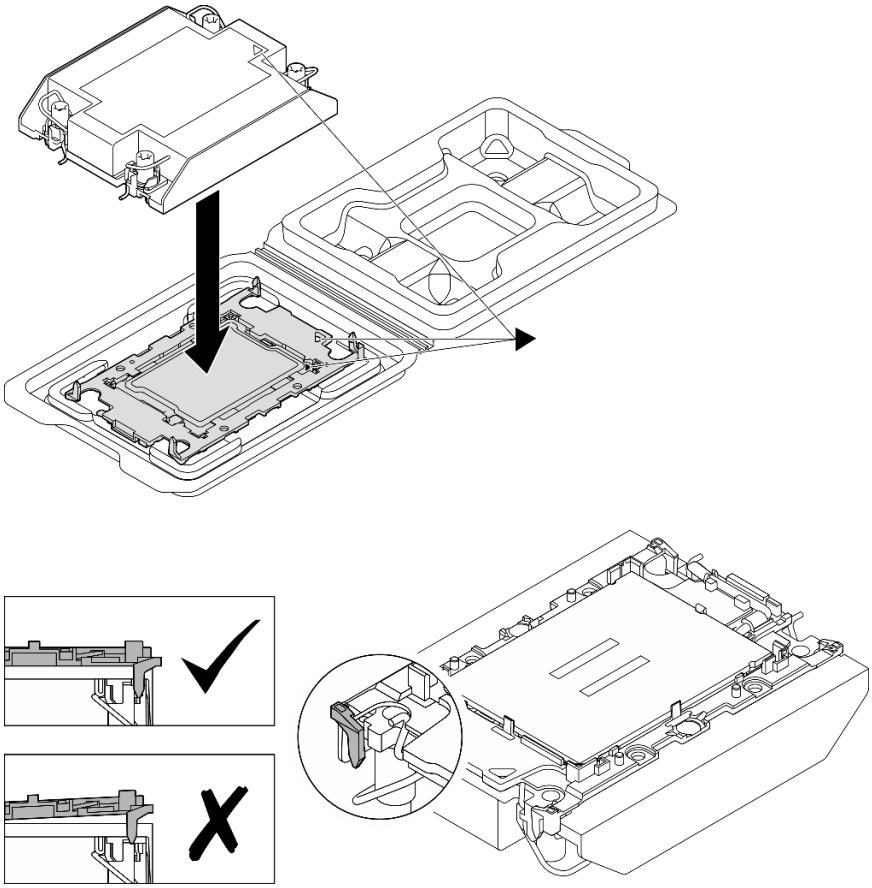

Figure 99. Assembling the PHM with processor in shipping tray

Step 5. Install the heat sink support bracket to the system board if performance heat sink is to be installed.

a. ❶ Lower the heat sink support bracket onto the system board.

b. ❷ Tighten the two screws to secure the heat sink support bracket.

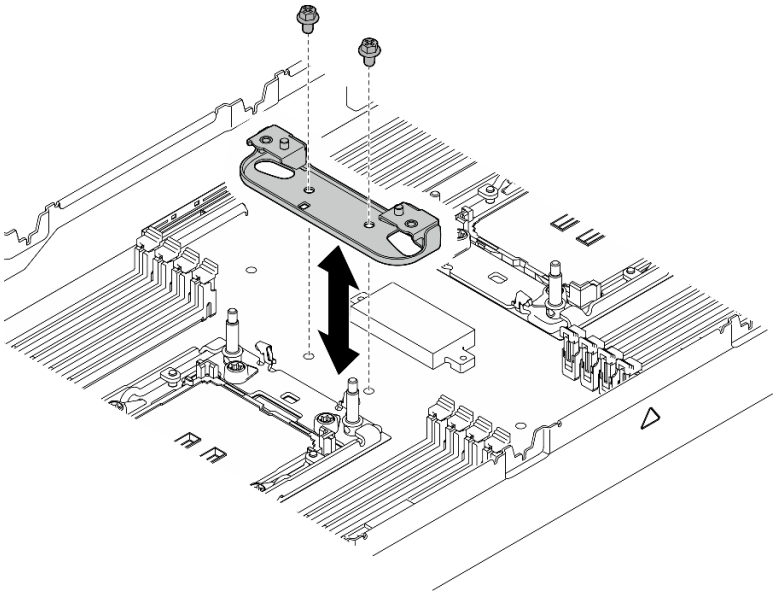

Figure 100. Heat sink support bracket replacement

Step 6. For one-processor configuration, install the 1U standard heat sink or 1U performance heat sink into processor socket 1.

Important:

- Do not touch the contacts on the bottom of the processor.
- Keep the processor socket clean from any object to prevent possible damages.

a. ❶ Rotate the anti-tilt wire bails inward.

b. ❷ Align the triangular mark and four Torx T30 nuts on the PHM with the triangular mark and threaded posts of the processor socket; then, insert the PHM into the processor socket.

c. ❸ Rotate the anti-tilt wire bails outward until they engage with the hooks in the socket.

d. ❹ Fully tighten the Torx T30 nuts ***in the installation sequence shown*** on the heat-sink label. Tighten the screws until they stop; then, visually inspect to make sure that there is no gap between the screw shoulder beneath the heat sink and the processor socket.

Note: For reference, the torque required for the screws to be fully tightened/removed is 10+/- 2.0 lbf-in, 1.1+/- 0.2 N-m.

Attention: To prevent damage to components, make sure to follow the indicated tightening/ loosening sequence.

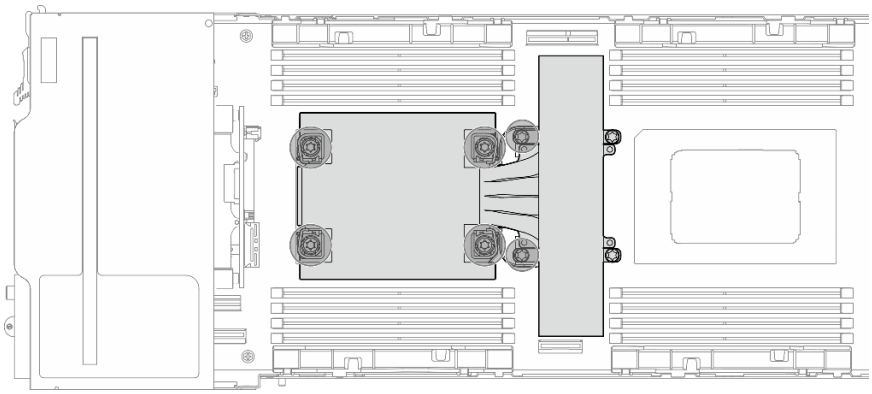

Figure 101. PHM location for one-processor configuration

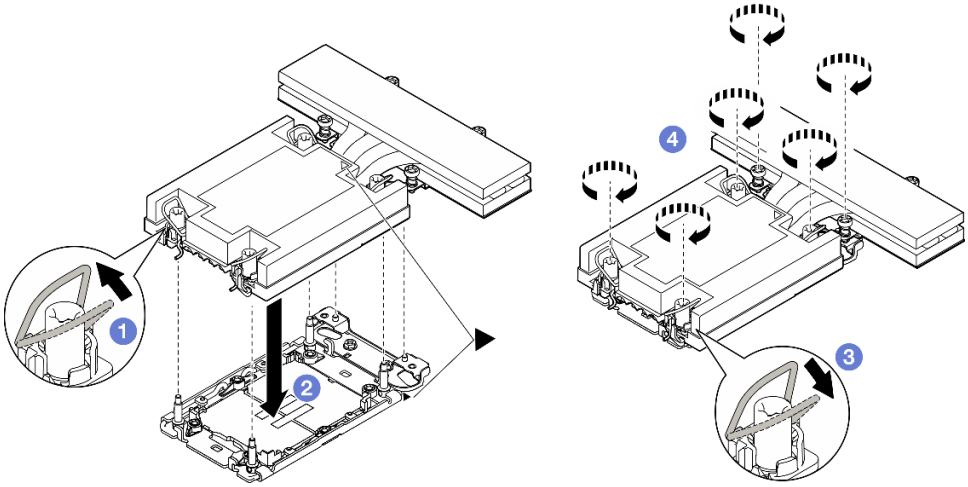

Figure 102. Installation of a 1U Performance PHM for one-processor configuration

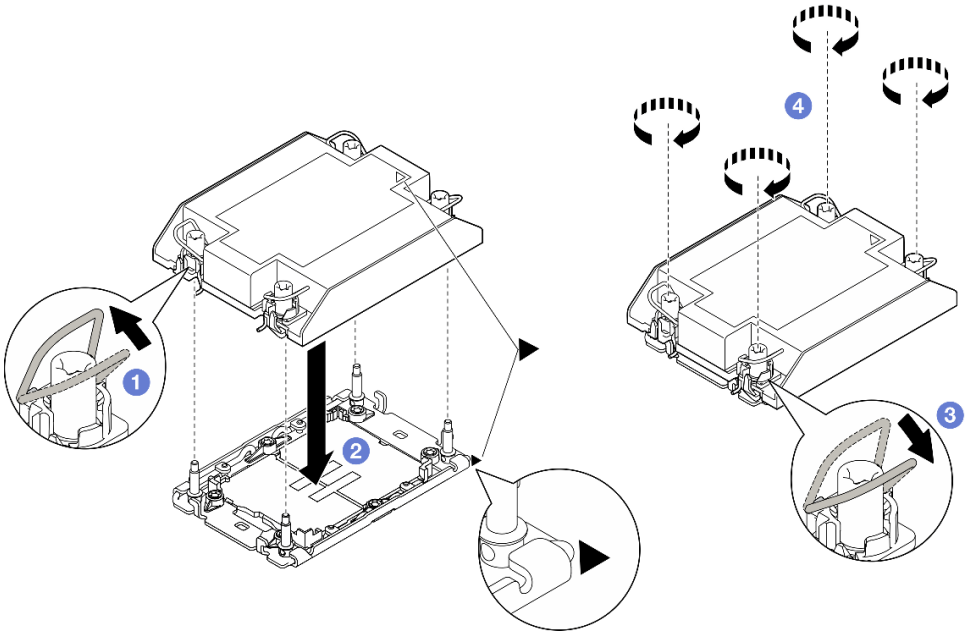

Figure 103. Installation of a 1U Standard PHM for one-processor configuration

Step 7. For two-processor configuration, install the 1U standard heat sink into processor socket 1 and 1U performance heat sink into processor socket 2.

Important:

- Do not touch the contacts on the bottom of the processor.
- Keep the processor socket clean from any object to prevent possible damages.

a. ❶ Rotate the anti-tilt wire bails inward.

b. ❷ Align the triangular mark and four Torx T30 nuts on the PHM with the triangular mark and threaded posts of the processor socket; then, insert the PHM into the processor socket.

c. ❸ Rotate the anti-tilt wire bails outward until they engage with the hooks in the socket.

d. ❹ Fully tighten the Torx T30 nuts ***in the installation sequence shown*** on the heat-sink label. Tighten the screws until they stop; then, visually inspect to make sure that there is no gap between the screw shoulder beneath the heat sink and the processor socket.

Note: For reference, the torque required for the screws to be fully tightened/removed is 10+/- 2.0 lbf-in, 1.1+/- 0.2 N-m.

Attention: To prevent damage to components, make sure to follow the indicated tightening/ loosening sequence.

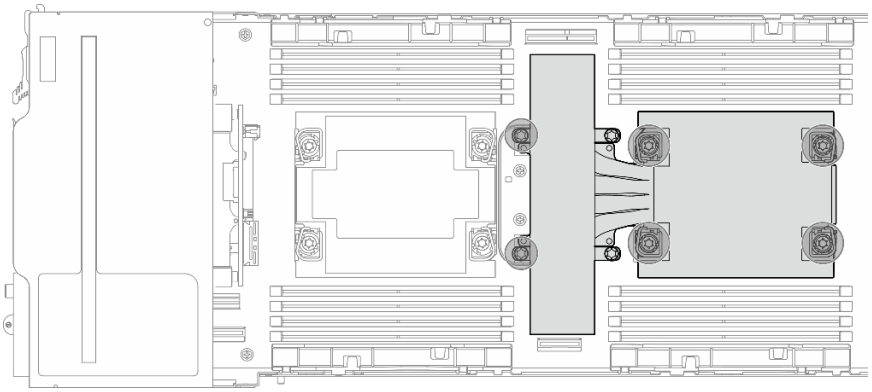

Figure 104. PHM location for two-processor configuration

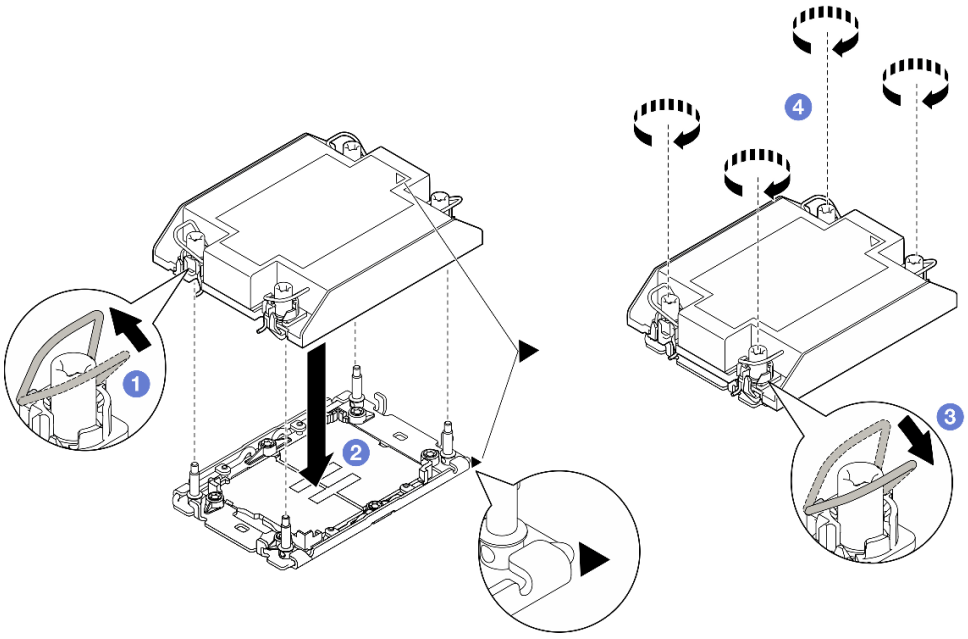

Figure 105. Installation of a 1U Standard PHM for two-processor configuration

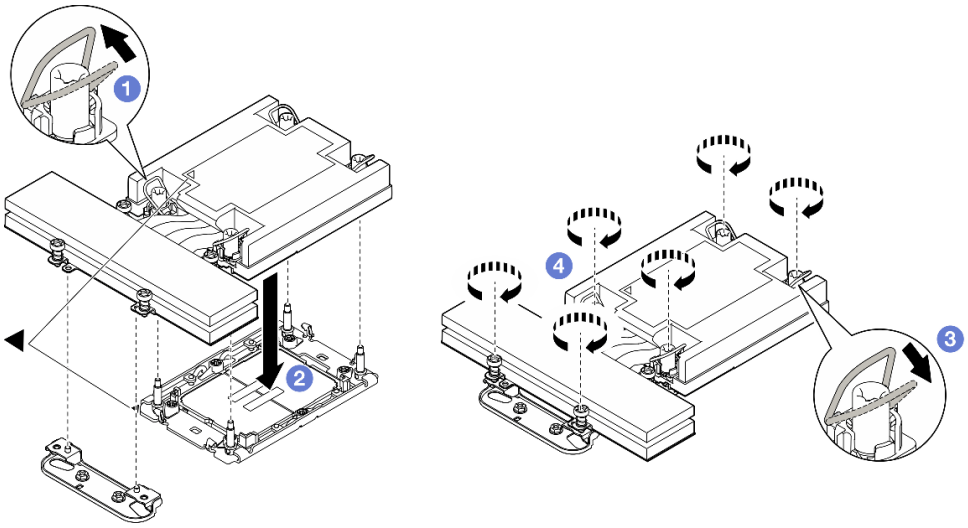

Figure 106. Installation of a 1U Performance PHM for two-processor configuration

After you finish

1. Make sure that all the required cables are routed and connected correctly; then, reinstall the top cover (see "Install the top cover" on page 171).
2. Reinstall the node into the chassis (see "Install a node to the chassis" on page 74).
3. Make sure that the required power supply units are installed and power cords are connected; then, power on the node (see "Install a hot-swap power supply" on page 58 and "Power on the node" on page 46).
4. Proceed to complete the parts replacement (see "Complete the parts replacement" on page 172).
5. To enable Intel® On Demand Suite to the new processor, or to transfer Intel® On Demand Suite from the defective processor to the new processor, refer to "Enable Intel® On Demand" on page 197.

Demo video

https://www.youtube.com/watch?v=K2Qq_Np_Q-s

Rear I/O module replacement

Follow instructions in this section to remove or install the rear I/O module.

Remove the rear I/O module

Follow instructions in this section to remove the rear I/O module.

About this task

To avoid potential danger, make sure to read and follow the safety information.

Attention: Read “Installation Guidelines” on page 39 and “Safety inspection checklist” on page 40 to make sure that you work safely.

Procedure

Step 1. Make preparations for this task.

a. Power off the node (see “Power off the node” on page 46); then, disconnect all external cables from the node.

b. Remove the node from the chassis (see “Remove a node from the chassis” on page 70); then, carefully lay the node on a flat, static-protective surface, orienting the node with the front toward you.

Notes:

- When removing the node, note the node tray number and make sure to install the node in the same tray from which it was removed. Reinstalling the node into a different tray requires the node to be reconfigured.
- For safety, make sure to hold the node with both hands when lifting the node.

c. Remove the top cover (see “Remove the top cover” on page 169).

d. If the GPU air duct is installed in the node, remove it (see “Remove the GPU air duct” on page 90).

e. If the PCIe riser assembly is installed, remove it from the node and disconnect the PCIe cables from the system board (see “Remove the PCIe riser assembly” on page 114 and Chapter 6 “Internal cable routing” on page 175).

Step 2. Disconnect the cables from the rear I/O module.

a. ❶ Loosen the screw that secures the grounding cable; then, remove the grounding cable from the rear I/O module.

b. ❷ Disconnect the rear I/O cable from the rear I/O module.

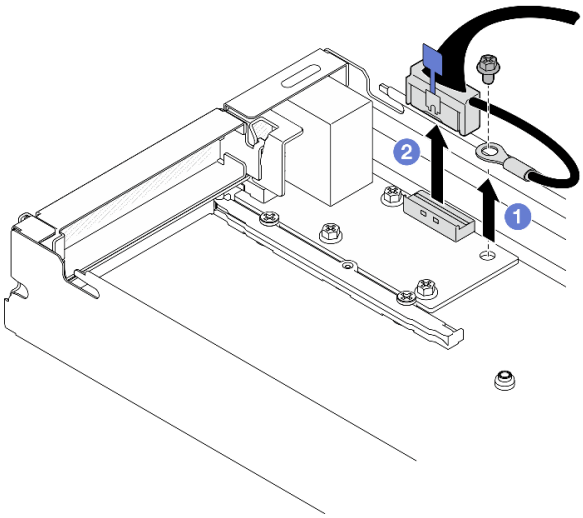

Figure 107. Removal of the rear I/O cable and grounding cable

Step 3. Remove the rear I/O module.

a. 1 Remove the three screws from the rear I/O module as illustrated.

b. 2 Slightly pull the rear I/O module toward the front of the node; then, lift it out of the node.

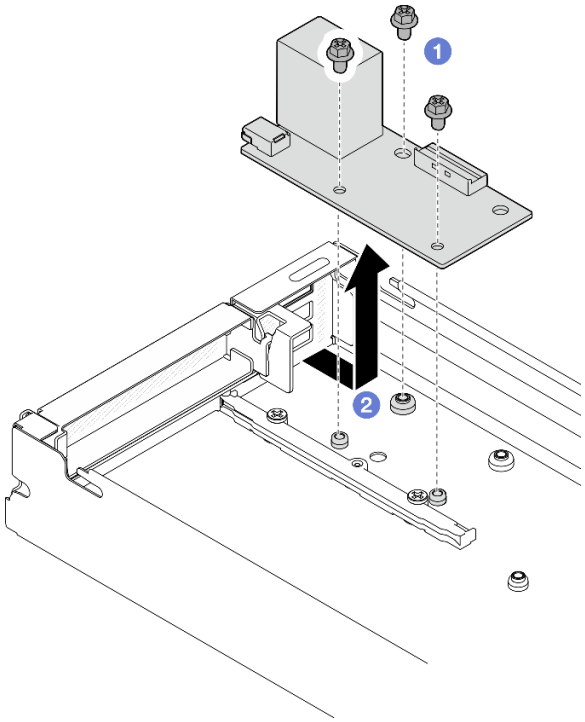

Figure 108. Removal of the rear I/O module

After you finish

1. Install a replacement unit (see “Install a rear I/O module” on page 149).
2. If you are instructed to return the component or optional device, follow all packaging instructions, and use any packaging materials for shipping that are supplied to you.

Demo video

https://www.youtube.com/watch?v=BZUw-HTtYNg

Install a rear I/O module

Follow instructions in this section to install a rear I/O module.

About this task

To avoid potential danger, make sure to read and follow the safety information.

Attention:

- Read “Installation Guidelines” on page 39 and “Safety inspection checklist” on page 40 to make sure that you work safely.
- Touch the static-protective package that contains the component to any unpainted metal surface on the node and chassis; then, take the component out of the package and place it on a static-protective surface.

Procedure

Step 1. Install the rear I/O module to the node.

a. ❶ Align the screw holes on the rear I/O module with the screw holes on the bottom of the node; then, lower the rear I/O module and slightly push it toward the rear into place.

b. ❷ Tighten the three screws as illustrated to secure the rear I/O module.

Note: Make sure that the standoffs are securely seated in the holes of the rear I/O module as illustrated.

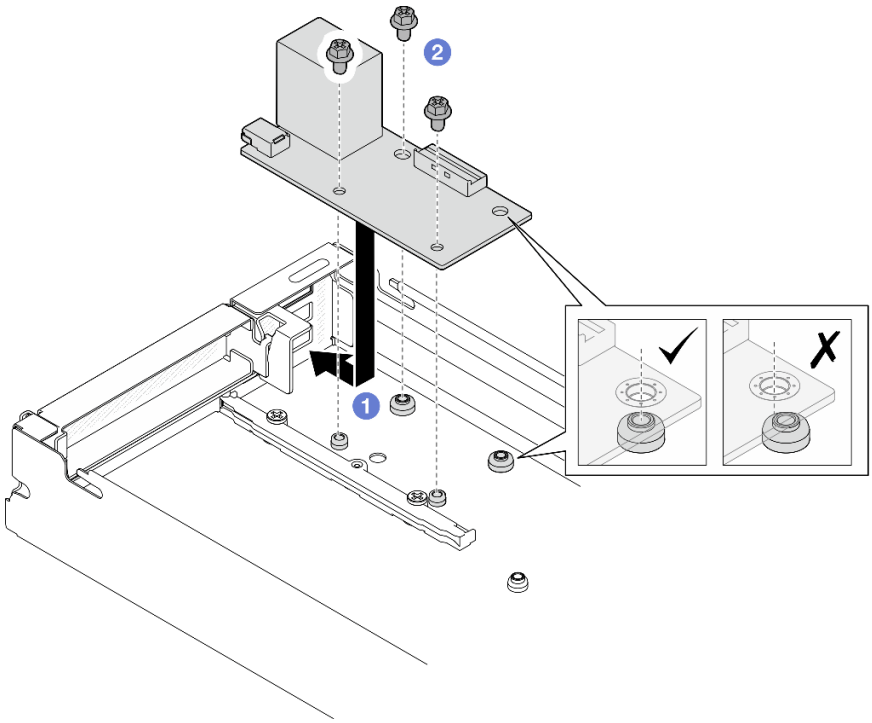

Figure 109. Installation of the rear I/O module

Step 2. Reconnect the cables to the rear I/O module.

a. ❶ Route and connect the cable between the rear I/O module and the system board (see “Rear I/O and OCP module cable routing” on page 183).

b. ❷ Secure the grounding cable onto the rear I/O module standoff with a screw as illustrated.

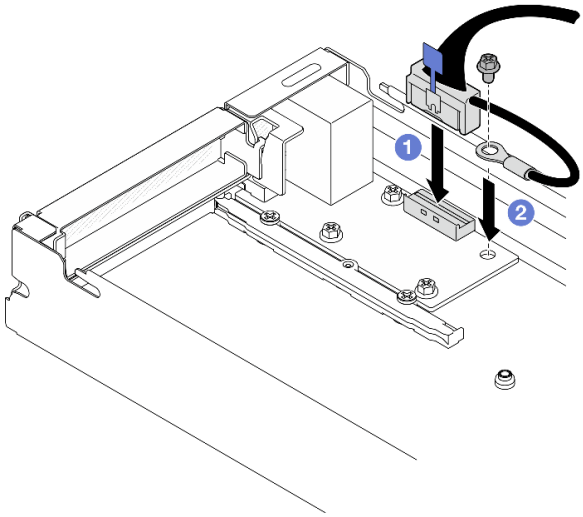

Figure 110. Installation of the rear I/O cable and grounding cable

After you finish

1. If necessary, reinstall the PCIe riser assembly to the node and reconnect the required PCIe cables to the system board (see “Install a PCIe riser assembly” on page 120 and Chapter 6 “Internal cable routing” on page 175).
2. If necessary, reinstall the GPU air duct (see “Install a GPU air duct” on page 91).
3. Make sure that all the required cables are routed and connected correctly; then, reinstall the top cover (see “Install the top cover” on page 171).
4. Reinstall the node into the chassis (see “Install a node to the chassis” on page 74).
5. Make sure that the required power supply units are installed and power cords are connected; then, power on the node (see “Install a hot-swap power supply” on page 58 and “Power on the node” on page 46).
6. Proceed to complete the parts replacement (see “Complete the parts replacement” on page 172).

Demo video

https://www.youtube.com

System board assembly replacement (trained technician only)

Follow instructions in this section to remove or install the system board assembly.

Important: This task must be operated by trained technicians.

CAUTION:



The heat sinks and processors might be very hot. Turn off the server and wait several minutes to let the server cool before removing the server cover.

Remove the firmware and RoT security module

Follow instructions in this section to remove the firmware and RoT security module (ThinkSystem V3 Firmware and Root of Trust Security Module).

About this task

To avoid potential danger, make sure to read and follow the safety information.

Attention: Read "Installation Guidelines" on page 39 and "Safety inspection checklist" on page 40 to make sure that you work safely.

Procedure

Step 1. Make preparations for this task.

a. Perform OneCLI commands to back up the UEFI settings. See https://pubs.lenovo.com/lxce-onecli/onecli_r_save_command.

b. Perform both OneCLI commands and XCC actions to back up the XCC settings. See https://pubs.lenovo.com/lxce-onecli/onecli_r_save_command and https://pubs.lenovo.com/xcc2/NN1ia_c_backupthexcc.html.

c. Power off the node (see "Power off the node" on page 46); then, disconnect all external cables from the node.

d. Remove the node from the chassis (see "Remove a node from the chassis" on page 70); then, carefully lay the node on a flat, static-protective surface, orienting the node with the front toward you.

Notes:

- When removing the node, note the node tray number and make sure to install the node in the same tray from which it was removed. Reinstalling the node into a different tray requires the node to be reconfigured.
- For safety, make sure to hold the node with both hands when lifting the node.

e. Remove the top cover (see "Remove the top cover" on page 169).

f. Disconnect all the cables from the drive backplane; then, remove the drive cage assembly from the node and place it on a flat, static-protective surface (see "Remove the drive cage assembly" on page 83).

Step 2. Locate the Firmware and RoT security module connector on the system board.

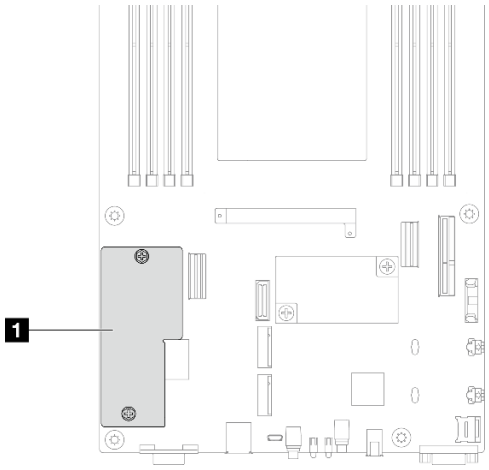

Figure 111. Location of the Firmware and RoT security module

Step 3. Remove the firmware and RoT security module from the system board.

a. 1 Loosen the two screws that secure the firmware and RoT security module on the system board.

b. 2 Lift the firmware and RoT security module away from the system board.

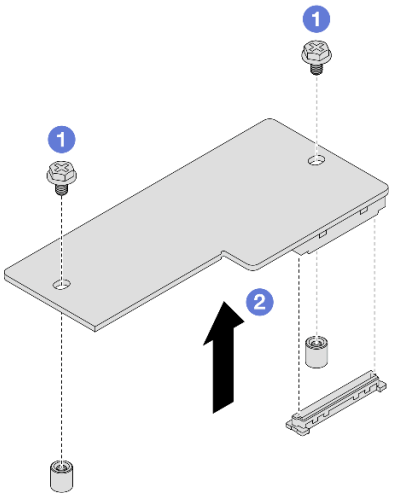

Figure 112. Removal of the Firmware and RoT security module

After you finish

1. Install a replacement unit (see “Install a firmware and RoT security module” on page 152).
2. If you are instructed to return the component or optional device, follow all packaging instructions, and use any packaging materials for shipping that are supplied to you.

Demo video

https://www.youtube.com/watch?v=d1fqMiOWR-4

Install a firmware and RoT security module

Follow instructions in this section to install a firmware and RoT security module (ThinkSystem V3 Firmware and Root of Trust Security Module).

About this task

Important: This task must be operated by trained technicians that are certified by Lenovo Service. Do not attempt to remove or install the part without proper training and qualification.

(Lenovo trained technician only) After replacing the firmware and RoT security module, update the UEFI firmware to the specific version supported by the server.

To avoid potential danger, make sure to read and follow the safety information.

Attention:

- Read "Installation Guidelines" on page 39 and "Safety inspection checklist" on page 40 to make sure that you work safely.
- Touch the static-protective package that contains the component to any unpainted metal surface on the node and chassis; then, take the component out of the package and place it on a static-protective surface.

Firmware and driver download: You might need to update the firmware or driver after replacing a component.

- Go to https://datacentersupport.lenovo.com/products/servers/thinksystem/sd530v3/7dd3/downloads/driver-list to see the latest firmware and driver updates for your server.
- Go to "Update the firmware" on page 189 for more information on firmware updating tools.

Procedure

Step 1. Touch the static-protective package that contains the component to any unpainted metal surface on the node and chassis; then, take the component out of the package and place it on a static-protective surface.

Step 2. Locate the Firmware and RoT security module connector on the system board.

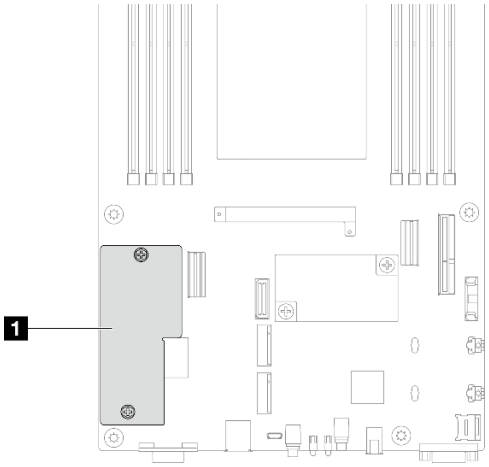

Figure 113. Location of the Firmware and RoT security module

Step 3. Install the firmware and RoT security module to the node.

a. 1 Lower the firmware and RoT security module onto the system board and make sure that the connector on the module is correctly inserted into the slot on the system board.

b. 2 Tighten the two screws to secure the firmware and RoT security module.

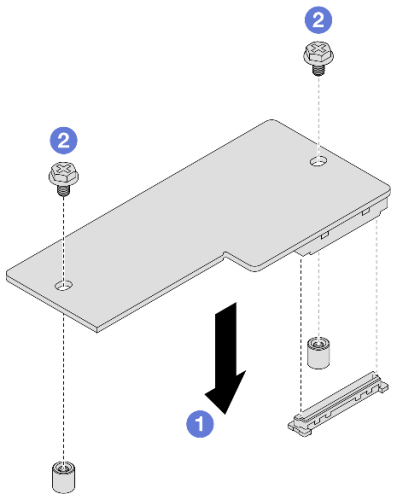

Figure 114. Installation of the firmware and RoT security module

After you finish

1. Reconnect all the required cables to the drive backplane; then, reinstall the drive cage assembly to the node (see “E3.S drive backplane cable routing” on page 178 and “Install a drive cage assembly” on page 87).
2. Make sure that all the required cables are routed and connected correctly; then, reinstall the top cover (see “Install the top cover” on page 171).
3. Reinstall the node into the chassis (see “Install a node to the chassis” on page 74).
4. Make sure that the required power supply units are installed and power cords are connected; then, power on the node (see “Install a hot-swap power supply” on page 58 and “Power on the node” on page 46).
5. Proceed to complete the parts replacement (see “Complete the parts replacement” on page 172).
6. Update the UEFI, XCC and LXPM firmware to the specific version supported by the server. See https://glosse4lenovo.lenovo.com/wiki/glosse4lenovo/view/How%20To/System%20related/How%20to%20do%20RoT%20Module%20FW%20update%20on%20ThinkSystem%20V3%20machines/ (Lenovo service technicians only).
7. Perform OneCLI commands to restore the UEFI settings. See https://pubs.lenovo.com/lxce-onecli/onecli_r_restore_command.
8. Perform both OneCLI commands and XCC actions to restore the XCC settings. See https://pubs.lenovo.com/lxce-onecli/onecli_r_restore_command and https://pubs.lenovo.com/xcc2/NN1ia_c_restorethexcc.html.
9. Optionally, do the following if needed:
   - Hide TPM. See “Hide/observe TPM” on page 167.
   - Update the TPM firmware. See “Update the TPM firmware” on page 168.
   - Enable UEFI Secure Boot. See “Enable UEFI Secure Boot” on page 169.

Demo video

https://www.youtube.com

Remove the system board (Trained technician only)

Follow instructions in this section to remove the system board.

Important:

- This task must be operated by trained technicians that are certified by Lenovo Service. Do not attempt to remove or install the part without proper training and qualification.
- When replacing the system board, always update the server with the latest firmware or restore the pre-existing firmware. Make sure that you have the latest firmware or a copy of the pre-existing firmware before you proceed.
- When removing the memory modules, label the slot number on each memory module, remove all the memory modules from the system board, and set them aside on a static-protective surface for reinstallation.
- **When disconnecting cables, make a list of each cable and record the connectors the cable is connected to, and use the record as a cabling checklist after installing the new system board assembly.**

About this task

To avoid potential danger, make sure to read and follow the safety information.

Attention: Read "Installation Guidelines" on page 39 and "Safety inspection checklist" on page 40 to make sure that you work safely.

Procedure

Step 1. Make preparations for this task.

a. Record all system configuration information, such as Lenovo XClarity Controller IP addresses, vital product data, and the machine type, model number, serial number, Universally Unique Identifier, and asset tag of the server.

b. Save the system configuration to an external device with Lenovo XClarity Essentials.

c. Save the system event log to external media.

d. Power off the node (see "Power off the node" on page 46); then, disconnect all external cables from the node.

e. Remove the node from the chassis (see "Remove a node from the chassis" on page 70); then, carefully lay the node on a flat, static-protective surface, orienting the node with the front toward you.

Notes:

- When removing the node, note the node tray number and make sure to install the node in the same tray from which it was removed. Reinstalling the node into a different tray requires the node to be reconfigured.
- For safety, make sure to hold the node with both hands when lifting the node.

f. Remove the top cover (see "Remove the top cover" on page 169).

g. Disconnect all the cables from the drive backplane; then, remove the drive cage assembly from the node and place it on a flat, static-protective surface (see "Remove the drive cage assembly" on page 83).

h. Remove the firmware and RoT security module (see "Remove the firmware and RoT security module" on page 151).

i. Remove all the installed processor and heat sink modules (see "Remove the processor and heat sink" on page 130).

j. Make sure to label the slot number on each memory module; then, remove all the memory modules from the system board and set them aside on a static-protective surface for reinstallation (see “Remove a memory module” on page 104).

Important: It is advised to print out the layout of memory module slots for reference.

k. If necessary, remove the M.2 drives (see “Remove an M.2 drive” on page 99).

l. Remove the microSD card (see “Remove the MicroSD card” on page 109).

m. If the GPU air duct is installed in the node, remove it (see “Remove the GPU air duct” on page 90).

n. If the PCIe riser assembly is installed, remove it from the node and disconnect the PCIe cables from the system board (see “Remove the PCIe riser assembly” on page 114 and Chapter 6 “Internal cable routing” on page 175).

o. Remove the power bus bar (see “Remove the power bus bar” on page 122).

p. Disconnect the power distribution board cables from the system board; then, remove the power distribution board (see “Remove the power distribution board” on page 126).

q. If the rear OCP and rear I/O module cables are connected to the system board, remove them (see “Rear I/O and OCP module cable routing” on page 183).

Step 2. Remove the heat sink support bracket.

a. ❶ Loosen the two screws that secure the support bracket.

b. ❷ Hold the support bracket and remove it from the system board.

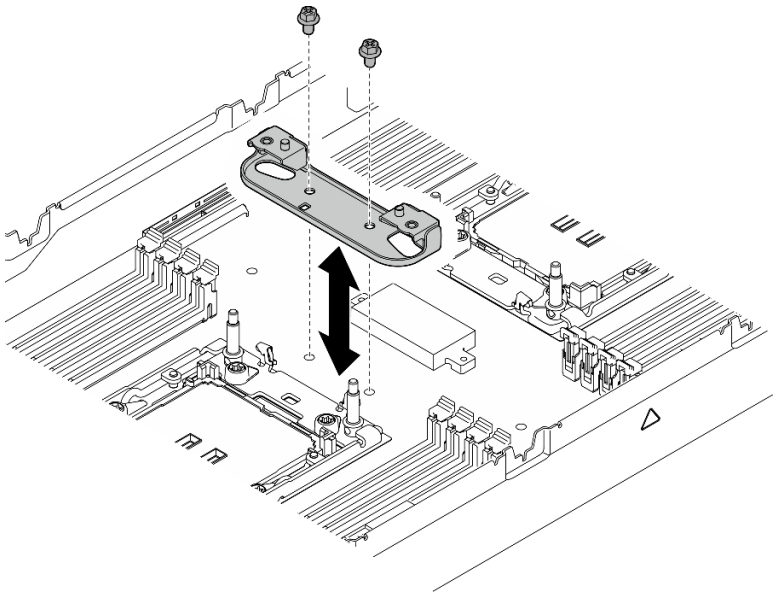

Figure 115. Heat sink support bracket replacement

Step 3. Disconnect all the cables from the system board. When disconnecting the cables, make a list of each cable and record the connectors the cables are connected to, and use the record as a cabling checklist after installing the new system board.

Step 4. Remove all the installed cable ducts.

a. ❶ Disengage the clips of the cable ducts from the node.

b. ❷ Lift the cable ducts out of the node.

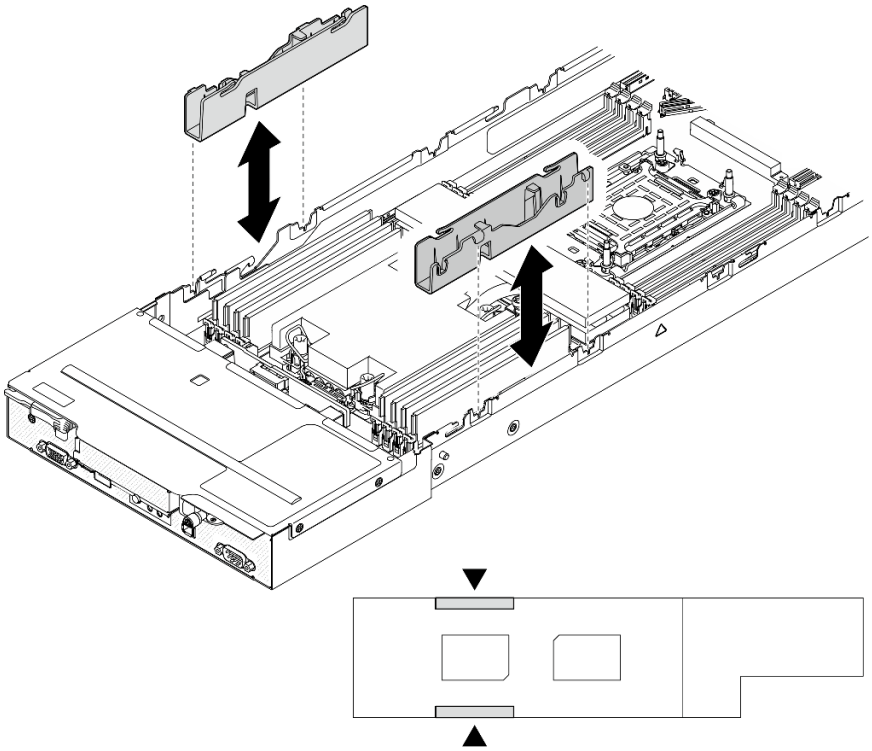

Figure 116. Cable duct replacement (one processor configuration)

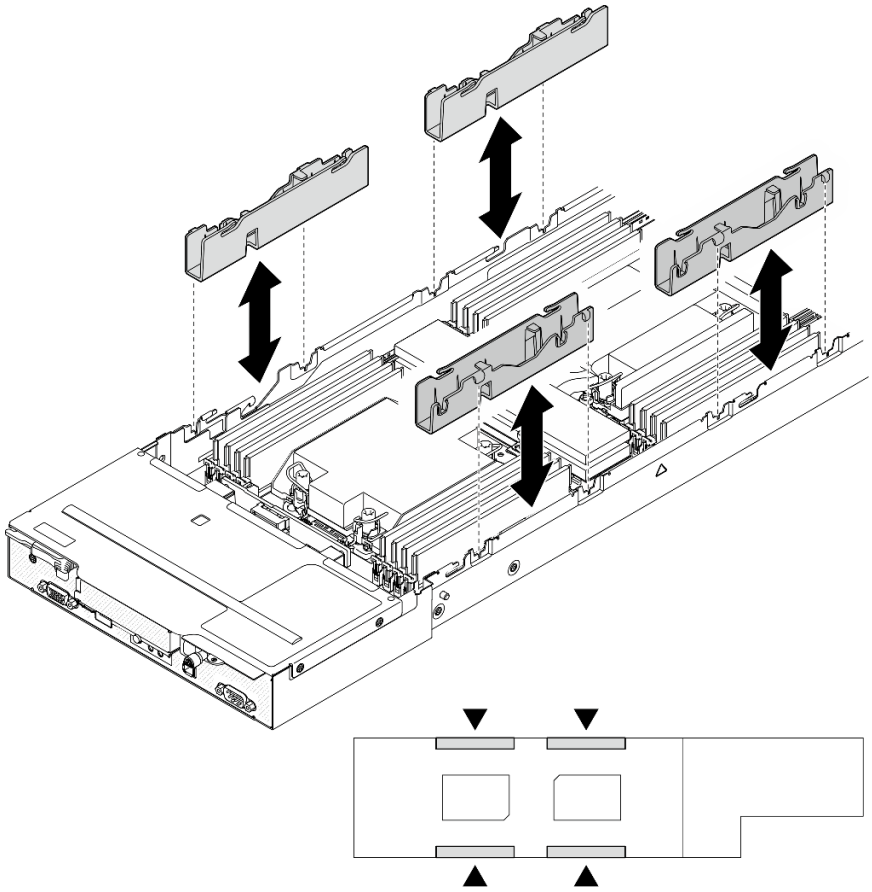

Figure 117. Cable duct replacement (two processor configuration)

Step 5. Remove the system-board screws from the front of the node.

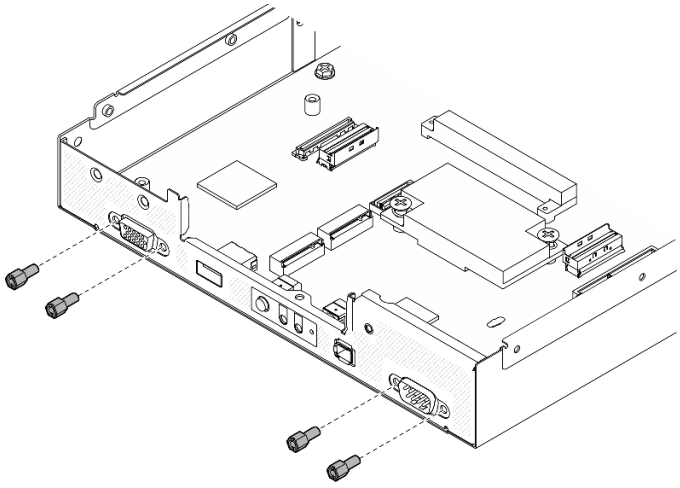

Figure 118. Removal of the screws

Step 6. Remove all the screws from the system board.

Important: When removing the system board from the node, avoid touching the connectors on the system board. Do not damage any surrounding components inside the node.

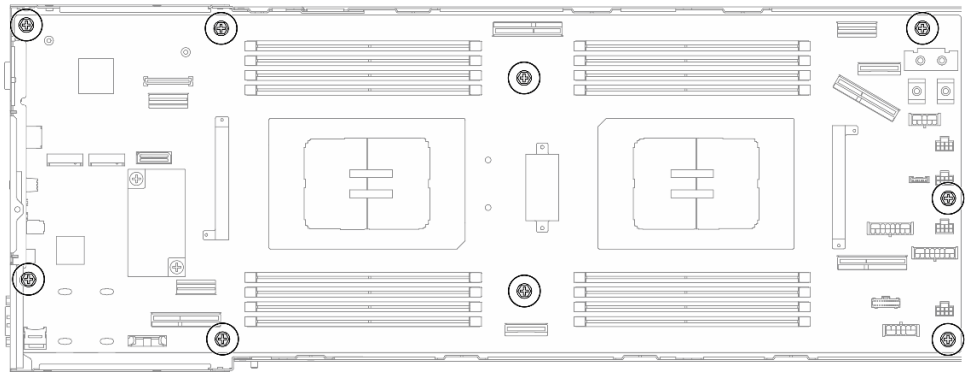

Figure 119. Removal of the screws

Step 7. Remove the system board from the node.

a. ❶ Carefully tilt and hold the rear edge of the system board; then, pivot the system board at an angle to disengage it.

b. ❷ Gently slide the system board toward the rear of the node; then, carefully lift the system board out of the node.

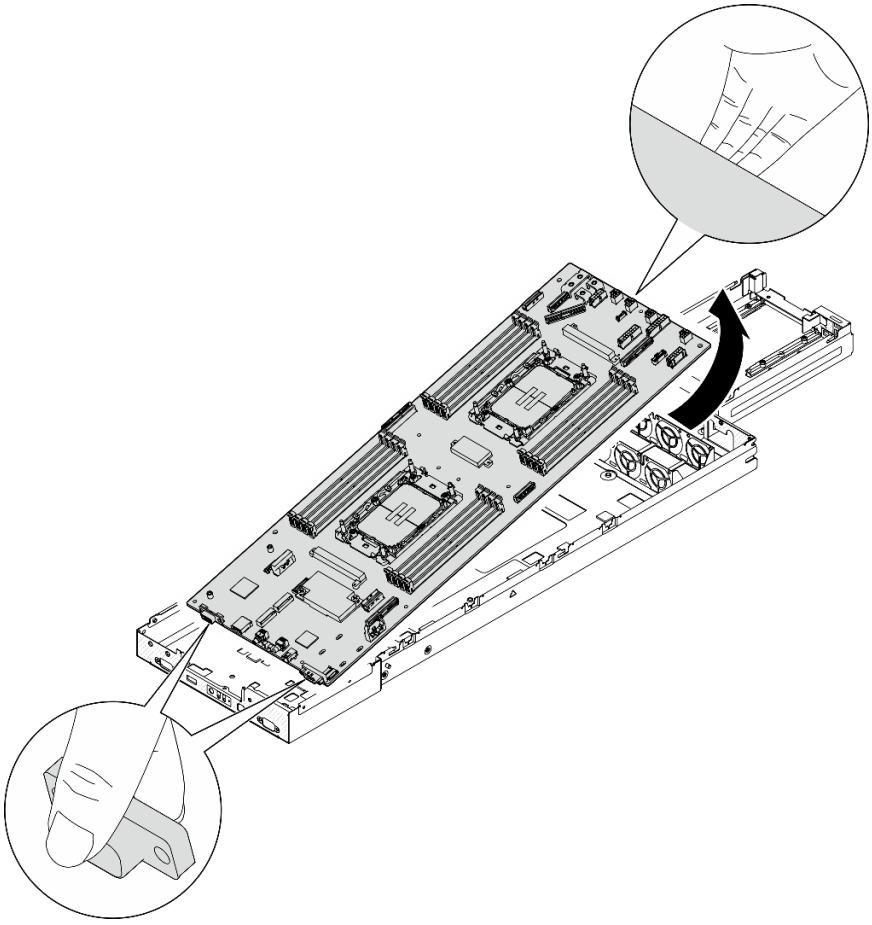

Figure 120. Removal of the system board

After you finish

1. Install a replacement unit (see “Install a system board (Trained technician only)” on page 160).
2. If you are instructed to return the component or optional device, follow all packaging instructions, and use any packaging materials for shipping that are supplied to you.

   Important: Before returning the system board, make sure to install the processor socket covers from the new system board. Follow the steps below to replace a processor socket cover:

   a. Take a socket cover from the processor socket assembly on the new system board and orient it correctly above the processor socket assembly on the removed system board.

   b. Gently press down the socket cover legs to the processor socket assembly, pressing on the edges to avoid damage to the socket pins. You might hear a click on the socket cover when it is securely attached.

   c. Make sure that the socket cover is securely attached to the processor socket assembly.

Demo video

https://www.youtube.com/watch?v=C_xOqBJyN_M

Install a system board (Trained technician only)

Follow instructions in this section to install a system board.

About this task

Important: This task must be operated by trained technicians that are certified by Lenovo Service. Do not attempt to remove or install the part without proper training and qualification.

To avoid potential danger, make sure to read and follow the safety information.

Attention:

- Read “Installation Guidelines” on page 39 and “Safety inspection checklist” on page 40 to make sure that you work safely.
- Prevent exposure to static electricity, which might lead to system halt and loss of data, by keeping static-sensitive components in their static-protective packages until installation, and handling these devices with an electrostatic-discharge wrist strap or other grounding system.
- After replacing the system board, always update the server with the latest firmware or restore the pre-existing firmware.

Firmware and driver download: You might need to update the firmware or driver after replacing a component.

- Go to https://datacentersupport.lenovo.com/products/servers/thinksystem/sd530v3/7dd3/downloads/driver-list to see the latest firmware and driver updates for your server.
- Go to “Update the firmware” on page 189 for more information on firmware updating tools.

Procedure

Step 1. Install the system board to the node.

Important: When installing the system board into the node, avoid touching the connectors on the system board. Do not damage any surrounding components inside the node.

a. Carefully hold the rear edge of the system board and tilt the system board at angle.

b. Align the connectors of the system board and the front of the node; then, gently slide and insert the system board into place.

c. Carefully seat the system board onto the corresponding guide pins and screw holes in the node.

Note: Make sure that the standoffs are securely seated in the holes of the system board.

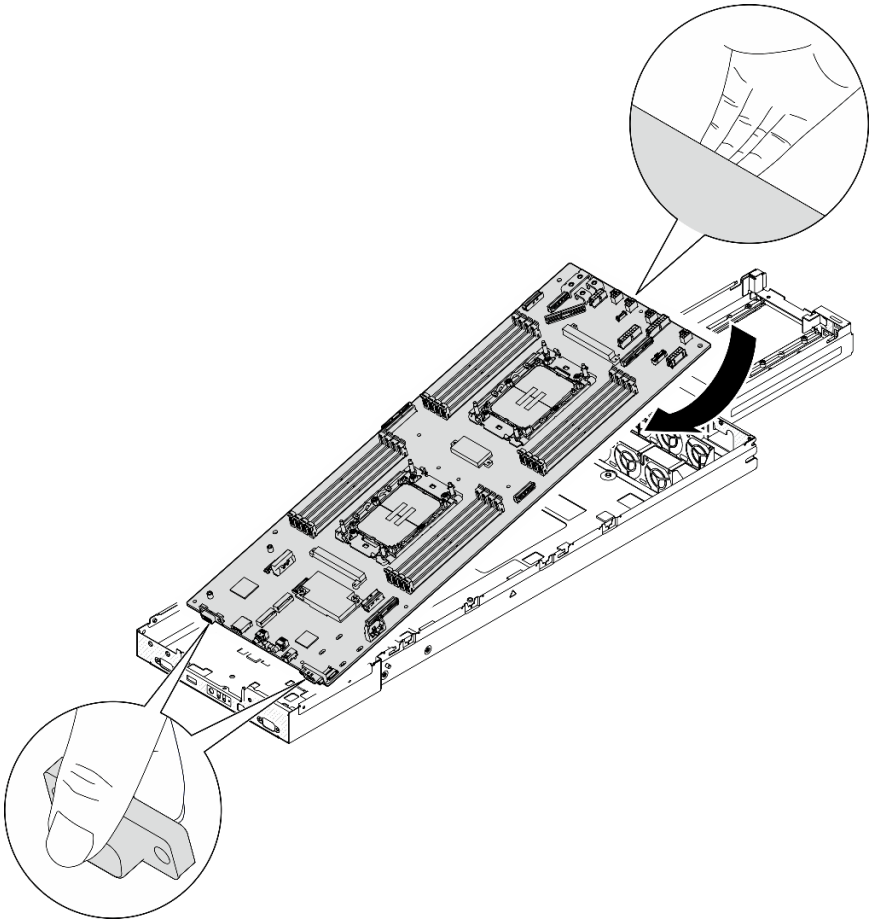

Figure 121. Installation of the system board

Step 2. Tighten all the system-board screws on the front of the node and on the system board.

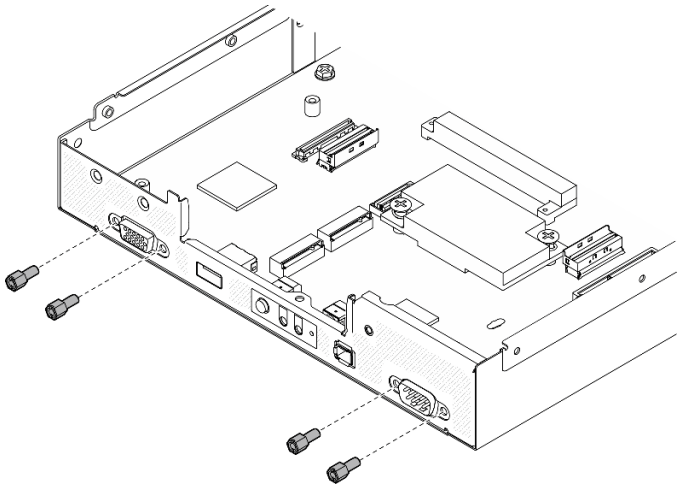

Figure 122. Installation of the system-board screws on the front

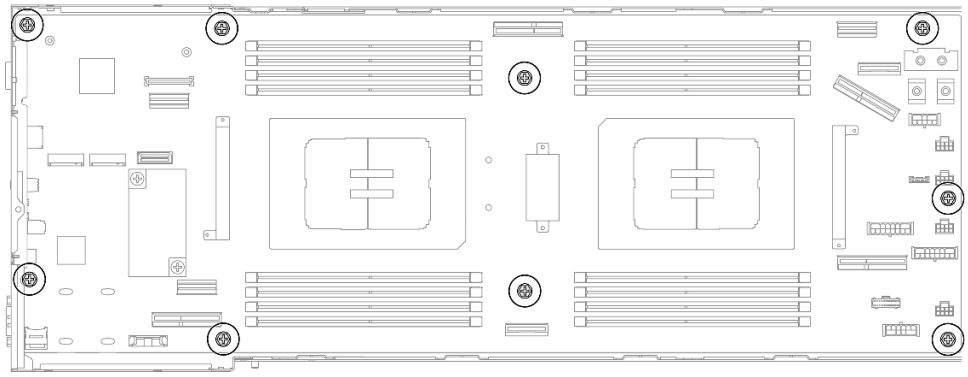

Figure 123. Installation of the screws on the system board

Step 3. Reinstall the cable ducts as illustrated.

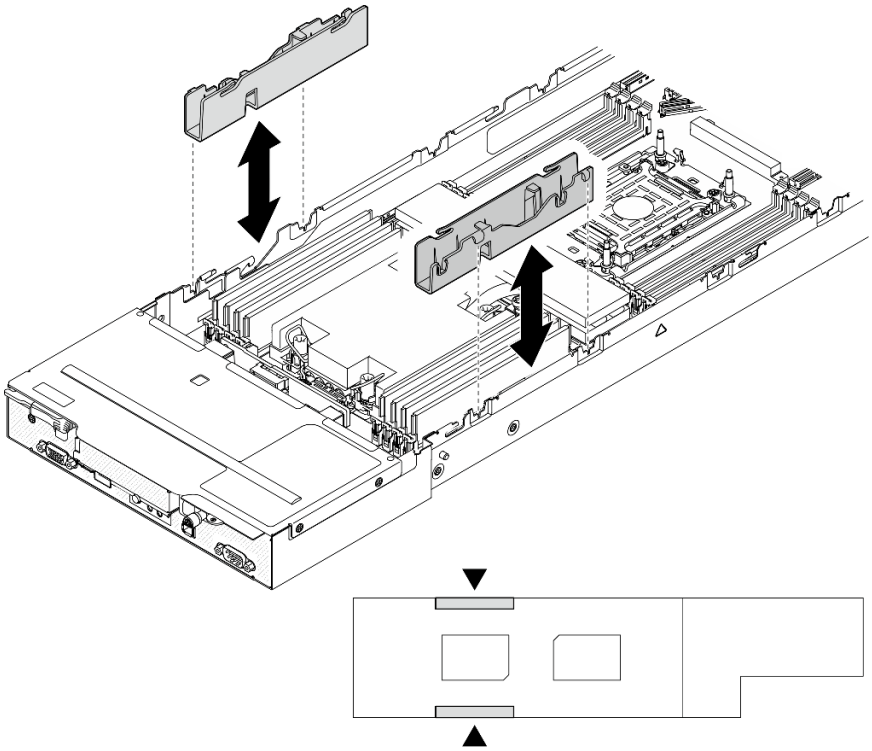

Figure 124. Cable duct replacement (one processor configuration)

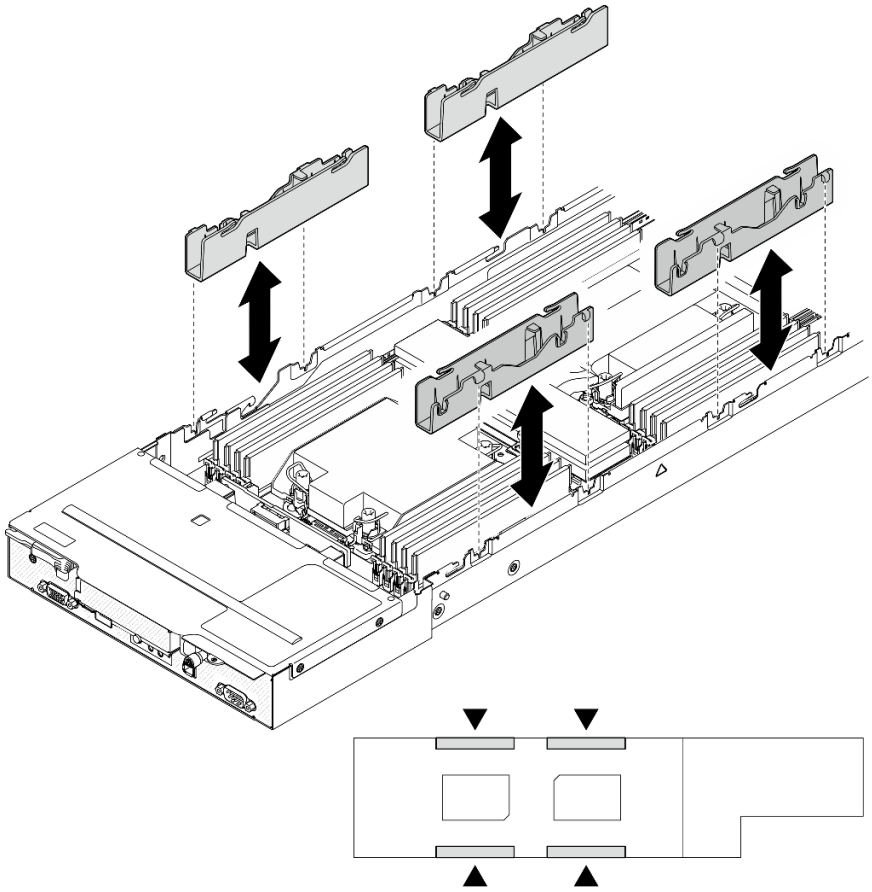

Figure 125. Cable duct replacement (two processor configuration)

Step 4. Reinstall the heat sink support bracket to the system board if performance heat sink is to be installed.

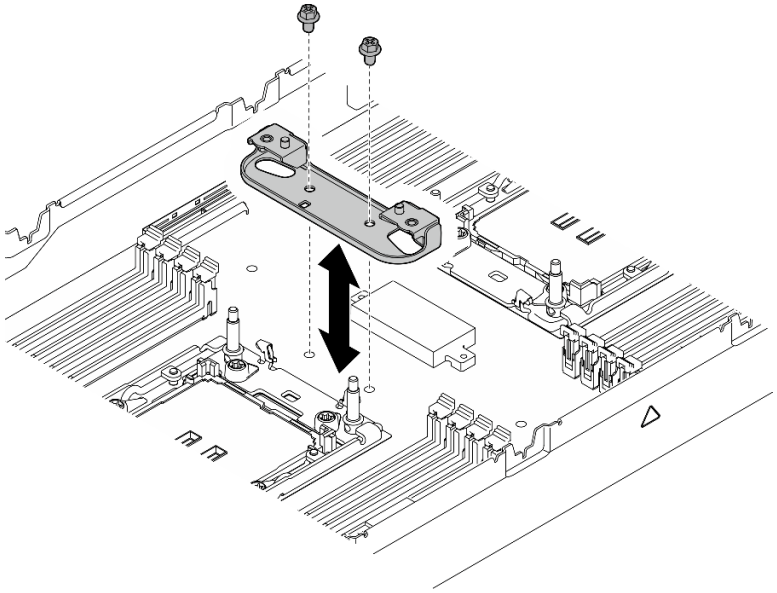

Figure 126. Heat sink support bracket replacement

After you finish

1. If necessary, install the rear I/O module and rear OCP cable to the node (see "Install a rear I/O module" on page 149 and "Install a power distribution board" on page 128); then, connect cables of the rear I/O module and OCP cable to the system board (see "Rear I/O and OCP module cable routing" on page 183).
2. If necessary, install the power distribution board and connect cables between the power distribution board and the system board (see "Install a power distribution board" on page 128 and "Power distribution board cable routing" on page 182).
3. Reinstall the power bus bar (see "Install a power bus bar" on page 124).
4. If necessary, reinstall the PCIe riser assembly to the node and reconnect the required PCIe cables to the system board (see "Install a PCIe riser assembly" on page 120 and Chapter 6 "Internal cable routing" on page 175).
5. If necessary, reinstall the GPU air duct (see "Install a GPU air duct" on page 91).
6. Reinstall the required M.2 drives to the system board (see "Install an M.2 drive" on page 102).
7. Reinstall the MicroSD card to the system board (see "Install a MicroSD card" on page 110).
8. Reinstall the firmware and RoT security module to the system board (see "Install a firmware and RoT security module" on page 152).
9. Reinstall all the required memory modules or memory module fillers (see "Install a memory module" on page 106).
10. If there is no CMOS battery (CR2032) installed on the system board yet, install one (see "Install a CMOS battery (CR2032)" on page 80).
11. Reconnect all the required cables to the system board (see Chapter 6 "Internal cable routing" on page 175).
12. Reconnect all the required cables to the drive backplane; then, reinstall the drive cage assembly to the node (see "E3.S drive backplane cable routing" on page 178 and "Install a drive cage assembly" on page 87).
13. Reinstall the required processor and heat sink modules (PHMs) (see "Install a processor and heat sink" on page 136).
14. Make sure that all the required cables are routed and connected correctly; then, reinstall the top cover (see "Install the top cover" on page 171).
15. Reinstall the node into the chassis (see "Install a node to the chassis" on page 74).
16. Make sure that the required power supply units are installed and power cords are connected; then, power on the node (see "Install a hot-swap power supply" on page 58 and "Power on the node" on page 46).
17. Proceed to complete the parts replacement (see "Complete the parts replacement" on page 172).
18. Update the vital product data (VPD). See "Update the Vital Product Data (VPD)" on page 166. Machine type number and serial number can be found on the ID label, see "Identify the system and access the Lenovo XClarity Controller" on page 33.
19. If hiding TPM or updating TPM firmware is needed, see "Hide/observe TPM" on page 167 or "Update the TPM firmware" on page 168.
20. Optionally, enable UEFI Secure Boot. See "Enable UEFI Secure Boot" on page 169.
21. Download and install the latest device drivers: https://datacentersupport.lenovo.com/products/servers/thinksystem/sd530v3/7dd3/downloads/driver-list.
22. Update the system and device firmware. See "Update the firmware" on page 189.

    Note: If you have replaced the firmware and RoT security module, update the firmware to the specific version supported by the server. See https://glosse4lenovo.lenovo.com/wiki/glosse4lenovo/view/How+To/

System+related/How+to+do+RoT+Module+FW+update+on+ThinkSystem+V3+machines/ (Lenovo service technicians only).

Demo video

https://www.youtube.com/watch?v=lmTYirAIfz8

Update the Vital Product Data (VPD)

Use this topic to update the Vital Product Data (VPD).

- **(Required)** Machine type
- **(Required)** Serial number
- **(Required)** System model
- (Optional) Asset tag
- (Optional) UUID

Recommended tools:

- Lenovo XClarity Provisioning Manager
- Lenovo XClarity Essentials OneCLI commands

Using Lenovo XClarity Provisioning Manager

Steps:

1. Start the server and press the key according to the on-screen instructions. The Lenovo XClarity Provisioning Manager interface is displayed by default.
2. Click ⚙ on the top right corner of the Lenovo XClarity Provisioning Manager main interface.
3. Click **Update VPD**; then, follow on-screen instructions to update the VPD.

Using Lenovo XClarity Essentials OneCLI commands

- Updating **machine type**
  `onecli config set SYSTEM_PROD_DATA.SysInfoProdName <m/t_model> [access_method]`
- Updating **serial number**
  `onecli config set SYSTEM_PROD_DATA.SysInfoSerialNum <s/n> [access_method]`
- Updating **system model**

  `onecli config set SYSTEM_PROD_DATA.SysInfoProdIdentifier <system model> [access_method]`
- Updating **asset tag**
  `onecli config set SYSTEM_PROD_DATA.SysEncloseAssetTag <asset_tag> [access_method]`
- Updating **UUID**
  `onecli config createuuid SYSTEM_PROD_DATA.SysInfoUUID [access_method]`

Variable	Description
<m/t_model>	The server machine type and model number. Type `xxxxyyyyyy`, where `xxxx` is the machine type and `yyyyyy` is the server model number.
<s/n>	The serial number on the server. Type `zzzzzzzz` (length 8-10 characters), where `zzzzzzzz` is the serial number.

<system model>	The system model on the server. Type `system yyyyyyyy`, where *yyyyyyyy* is the product identifier.
<asset_tag>	The server asset tag number. Type `aaaaaaaaaaaaaaaaaaaaaaaaaaaaaaaa`, where `aaaaaaaaaaaaaaaaaaaaaaaaaaaaaaaa` is the asset tag number.
[access_method]	The access method that you select to access the target server. • Online KCS (unauthenticated and user restricted): You can directly delete *[access_method]* from the command. • Online authenticated LAN: In this case, specify below LAN account information at the end of the OneCLI command: `--bmc-username` *<user_id>* `--bmc-password` *<password>* • Remote WAN/LAN: In this case, specify below XCC account information and IP address at the end of the OneCLI command: `--bmc` *<bmc_user_id>*:*<bmc_password>*@*<bmc_external_IP>* **Notes:** – *<bmc_user_id>* The BMC account name (1 of 12 accounts). The default value is USERID. – *<bmc_password>* The BMC account password (1 of 12 accounts).

Hide/observe TPM

TPM is enabled by default to encrypt data transfer for system operation. Optionally, you can disable TPM using Unified Extensible Firmware Interface (UEFI) or Lenovo XClarity Essentials OneCLI.

Using UEFI

For details, see “Hide TPM from OS” in *UEFI User Guide* at https://pubs.lenovo.com/uefi-overview/.

Using Lenovo XClarity Essentials OneCLI

To disable TPM, do the following:

1. Download and install Lenovo XClarity Essentials OneCLI.

   To download Lenovo XClarity Essentials OneCLI, go to the following site:

   https://datacentersupport.lenovo.com/solutions/HT116433

2. Run the following command:

   `OneCli.exe config set TrustedComputingGroup.HideTPMfromOS "Yes" -bmc` *<userid>*:*<password>*@*<ip_address>*

   where:

   - *<userid>*:*<password>* are the credentials used to access the BMC (Lenovo XClarity Controller interface) of your server. The default user ID is USERID, and the default password is PASSW0RD (zero, not an uppercase o)
   - *<ip_address>* is the IP address of the BMC.

   Example:

```
D:\onecli>OneCli.exe config set UEFI.TrustedComputingGroup_TPMDevice "Disabled" --bmc USERID:PASSWORD@10.245.38.64
[1s]Certificate check finished [100%][=======================================================================================>]
Start to connect BMC at 10.245.38.64 to apply config set
Invoking SET command ...
UEFI.TrustedComputingGroup_TPMDevice=Disabled
Changes completed successfully, but these changes will not take effect until next reboot.
Succeed.
```

3. Reboot the system.

If you want to enable TPM again, run the following command and reboot the system:
`OneCli.exe config set TrustedComputingGroup.HideTPMfromOS "No" -bmc <userid>:<password>@<ip_address>`

Example:

```
D:\onecli>OneCli.exe config set UEFI.TrustedComputingGroup_TPMDevice "Enabled" --bmc USERID:PASSWORD@10.245.38.64
[1s]Certificate check finished [100%][=======================================================================================>]
Start to connect BMC at 10.245.38.64 to apply config set
Invoking SET command ...
UEFI.TrustedComputingGroup_TPMDevice=Enabled
Changes completed successfully, but these changes will not take effect until next reboot.
Succeed.
```

Update the TPM firmware

Optionally, you can update the TPM firmware using Lenovo XClarity Essentials OneCLI.

Note: TPM firmware update is irreversible. After update, the TPM firmware cannot be downgraded to earlier versions.

TPM firmware version

Follow the procedure below to see the TPM firmware version:

From Lenovo XClarity Provisioning Manager

1. Start the server and press the key specified in the on-screen instructions to display the Lenovo XClarity Provisioning Manager interface. (For more information, see the “Startup” section in the LXPM documentation compatible with your server at https://pubs.lenovo.com/lxpm-overview/.)
2. If the power-on Administrator password is required, enter the password.
3. From the UEFI Setup page, click **System Settings → Security → Trusted Platform Module → TPM 2.0 → TPM Firmware Version**.

Update the TPM firmware

To update the TPM firmware, do the following:

1. Download and install Lenovo XClarity Essentials OneCLI.

   To download Lenovo XClarity Essentials OneCLI, go to the following site:

   https://datacentersupport.lenovo.com/solutions/HT116433

2. Run the following command:
   `OneCli.exe config set TrustedComputingGroup.DeviceOperation "Update to TPM 2.0 firmware version <x.x.x.x>" --bmc <userid>:<password>@<ip_address>`

   where:

   - *<x.x.x.x>* is the target TPM version.

     e.g. TPM 2.0 (7.2.1.0) -> TPM 2.0 (7.2.2.0):

     `OneCli.exe config set TrustedComputingGroup.DeviceOperation "Update to TPM 2.0 firmware version 7.2.2.0" --bmc <userid>:<password>@<ip_address>`

- *<userid>:<password>* are the credentials used to access the BMC (Lenovo XClarity Controller interface) of your server. The default user ID is USERID, and the default password is PASSW0RD (zero, not an uppercase o).
- *<ip_address>* is the IP address of the BMC.

Enable UEFI Secure Boot

Optionally, you can enable UEFI Secure Boot.

There are two methods available to enable UEFI Secure Boot:

- From Lenovo XClarity Provisioning Manager

  To enable UEFI Secure Boot from Lenovo XClarity Provisioning Manager:

  1. Start the server and press the key specified in the on-screen instructions to display the Lenovo XClarity Provisioning Manager interface. (For more information, see the "Startup" section in the LXPM documentation compatible with your server at https://pubs.lenovo.com/lxpm-overview/.)
  2. If the power-on Administrator password is required, enter the password.
  3. From the UEFI Setup page, click **System Settings → Security → Secure Boot Configuration → Secure Boot Setting**.
  4. Enable Secure Boot and save the settings.

  Note: If disabling UEFI secure boot is needed, select Disable in step 4.

- From Lenovo XClarity Essentials OneCLI

  To enable UEFI Secure Boot from Lenovo XClarity Essentials OneCLI:

  1. Download and install Lenovo XClarity Essentials OneCLI.

     To download Lenovo XClarity Essentials OneCLI, go to the following site:

     https://datacentersupport.lenovo.com/solutions/HT116433

  2. Run the following command to enable Secure Boot:
     `OneCli.exe config set UEFI.SecureBootConfiguration_SecureBootSetting Enabled --bmc <userid>:<password>@<ip_address>`

     where:

     - *<userid>:<password>* are the credentials used to access the BMC (Lenovo XClarity Controller interface) of your server. The default user ID is USERID, and the default password is PASSW0RD (zero, not an uppercase o)
     - *<ip_address>* is the IP address of the BMC.

     For more information about the Lenovo XClarity Essentials OneCLI `set` command, see:

     https://pubs.lenovo.com/lxce-onecli/onecli_r_set_command

  Note: If disabling UEFI secure boot is needed, run the following command:
  `OneCli.exe config set UEFI.SecureBootConfiguration_SecureBootSetting Disabled --bmc <userid>:<password>@<ip_address>`

Top cover replacement

Follow instructions in this section to remove or install the top cover.

Remove the top cover

Follow instructions in this section to remove the top cover from the node.

About this task

To avoid potential danger, make sure to read and follow the safety information.

Attention: Read “Installation Guidelines” on page 39 and “Safety inspection checklist” on page 40 to make sure that you work safely.

Procedure

Step 1. Make preparations for this task.

a. Power off the node (see “Power off the node” on page 46); then, disconnect all external cables from the node.

b. Remove the node from the chassis (see “Remove a node from the chassis” on page 70); then, carefully lay the node on a flat, static-protective surface, orienting the node with the front toward you.

Notes:

- When removing the node, note the node tray number and make sure to install the node in the same tray from which it was removed. Reinstalling the node into a different tray requires the node to be reconfigured.
- For safety, make sure to hold the node with both hands when lifting the node.

Step 2. Remove the top cover from the node.

a. ❶ Press the release button on the side of the top cover.

b. ❷ Slide the top cover toward the rear of the node; then, lift it up from the node and place it on a flat and clean surface.

Important:

- Service label is located on the inside of the top cover (see “Identify the system and access the Lenovo XClarity Controller” on page 33).
- For proper cooling and air flow, install the top cover before powering on the node. Operating the node with the top cover removed might damage the components.

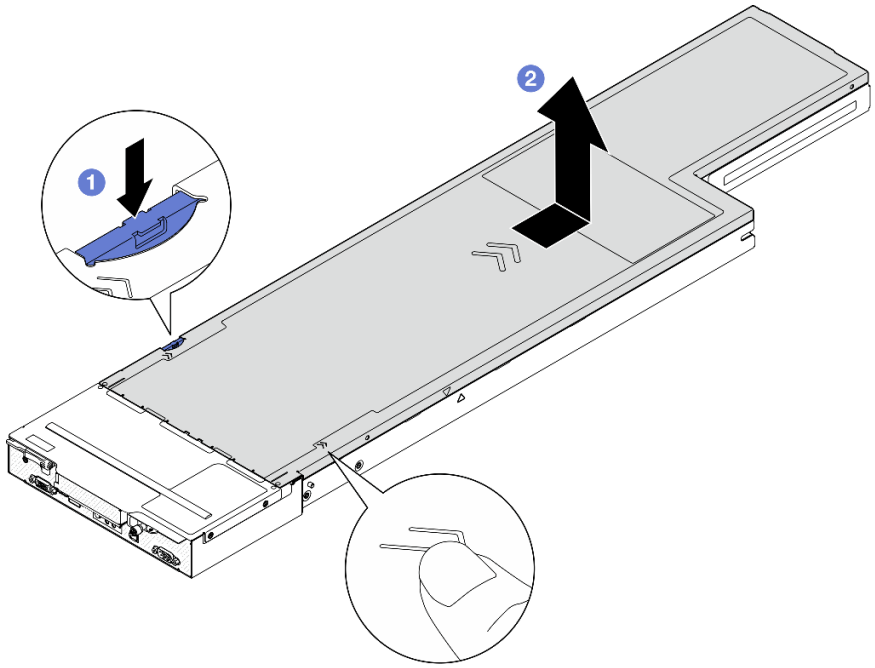

Figure 127. Removal of the top cover

After you finish

1. Install a replacement unit (see “Install the top cover” on page 171).
2. If you are instructed to return the component or optional device, follow all packaging instructions, and use any packaging materials for shipping that are supplied to you.

Demo video

https://www.youtube.com/watch?v=RMKfzugDGVk

Install the top cover

Follow instructions in this section to install the top cover.

About this task

To avoid potential danger, make sure to read and follow the safety information.

Attention:

- Read “Installation Guidelines” on page 39 and “Safety inspection checklist” on page 40 to make sure that you work safely.
- Make sure that all cables, adapters, and other components are installed and seated correctly and that there are no loose tools or parts left inside the node.
- Make sure that all internal cables are correctly routed (see Chapter 6 “Internal cable routing” on page 175).

Procedure

Step 1. Align the top cover guide pins with the guide holes on the node; then, place the top cover onto the top of the node and slide it towards the front of the node until it engages with the node.

Step 2. Check and make sure that the button on the side of the top cover is in locked position.

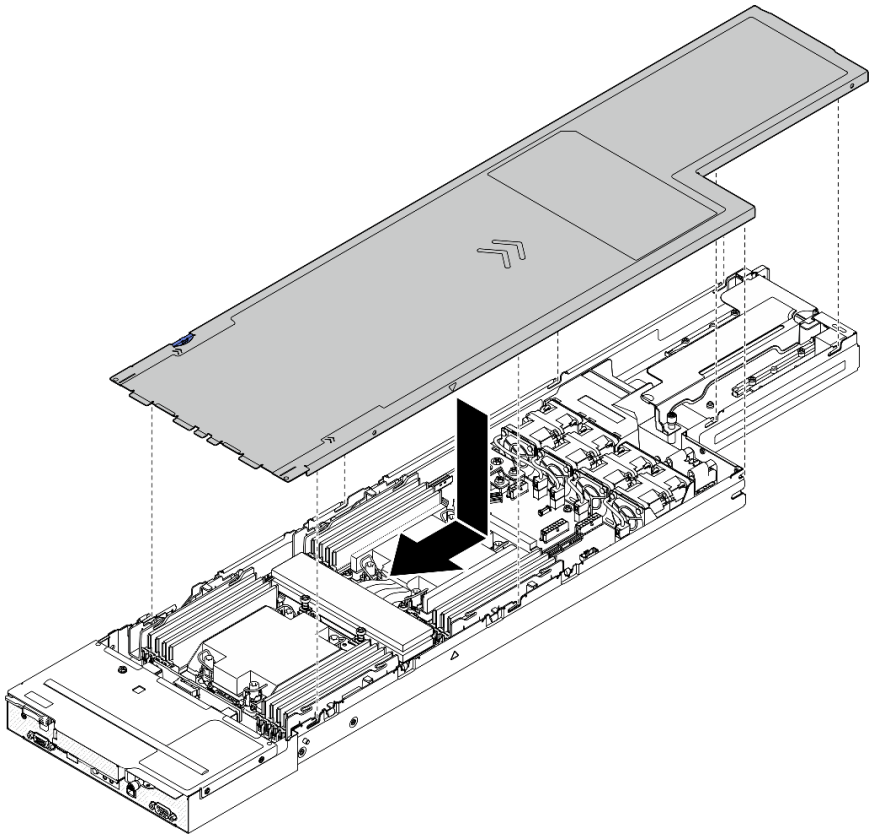

Figure 128. Installation of the top cover

After you finish

1. Reinstall the node into the chassis (see “Install a node to the chassis” on page 74).
2. Make sure that the required power supply units are installed and power cords are connected; then, power on the node (see “Install a hot-swap power supply” on page 58 and “Power on the node” on page 46).
3. Proceed to complete the parts replacement (see “Complete the parts replacement” on page 172).

Demo video

https://www.youtube.com/watch?v=3zkWjmDHzA4

Complete the parts replacement

Go through the checklist to complete parts replacement.

To complete the parts replacement, do the following:

1. Make sure that all components have been reassembled correctly and that no tools or loose screws are left inside the node.
2. Properly route and secure the cables in the node. Refer to the cable connecting and routing information for each component (see Chapter 6 “Internal cable routing” on page 175).
3. Reinstall the node into the chassis (see “Install a node to the chassis” on page 74).

4. Make sure that the required power supply units are installed and power cords are connected; then, power on the node (see “Install a hot-swap power supply” on page 58 and “Power on the node” on page 46).
5. Update the system configuration.
   - Download and install the latest device drivers: http://datacentersupport.lenovo.com.
   - Update the system firmware. See “Update the firmware” on page 189.
   - Update the UEFI configuration. See https://pubs.lenovo.com/uefi-overview/.
   - Reconfigure the disk arrays if you have installed or removed a hot-swap drive or a RAID adapter. See https://pubs.lenovo.com/lxpm-overview/ for the LXPM documentation compatible with your system.

Chapter 6. Internal cable routing

See this section to do cable routing for specific components.

Before connecting the cables, read the following guidelines carefully:

- Turn off the node before connecting or disconnecting any internal cables.
- Refer to the documentation that comes with any external devices for additional cabling instructions.
- Make use of the identifiers printed on the cables to locate the proper connectors.
- Make sure that the cable is not pinched and does not cover any connectors or obstruct any components on the system board.

Important:

- To avoid cable interference, the cables next to the DIMM slots must be separated from the DIMMs by the cable ducts.

Note: Disengage all latches, release tabs, or locks on cable connectors when you disconnect cables from the system board. Failing to release them before removing the cables will damage the cable sockets on the system board, which are fragile. Any damage to the cable sockets might require replacing the system board.

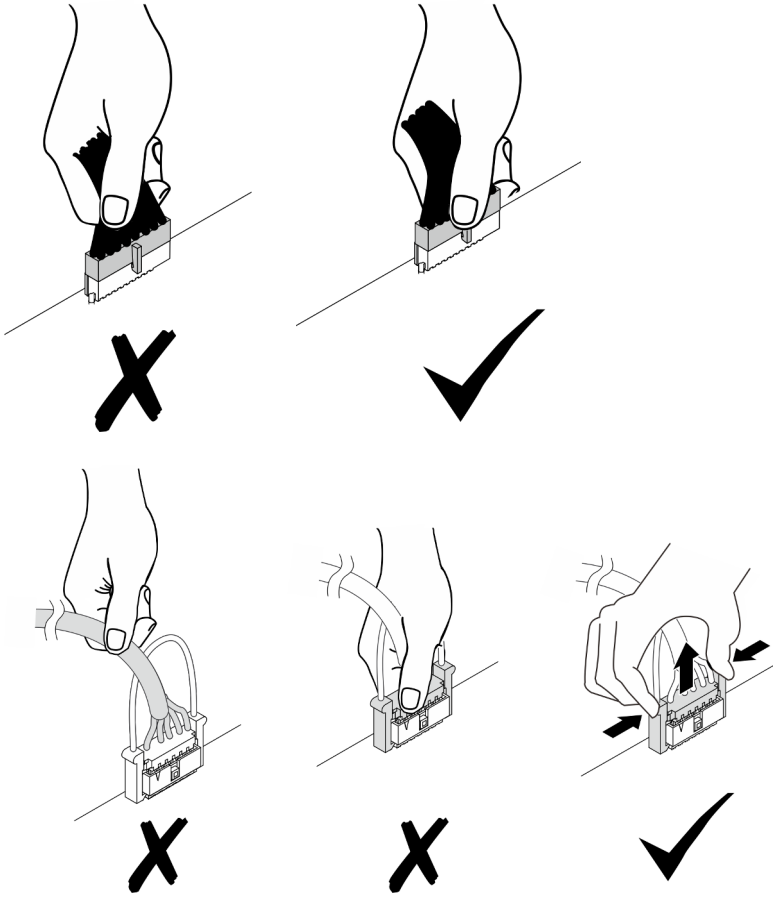

© Copyright Lenovo 2025

Identifying connectors

See this section to locate and identify the connectors on the electric boards.

System-board connectors for cable routing

See this section to locate and identify the connectors on the system board that are used for internal cable routing.

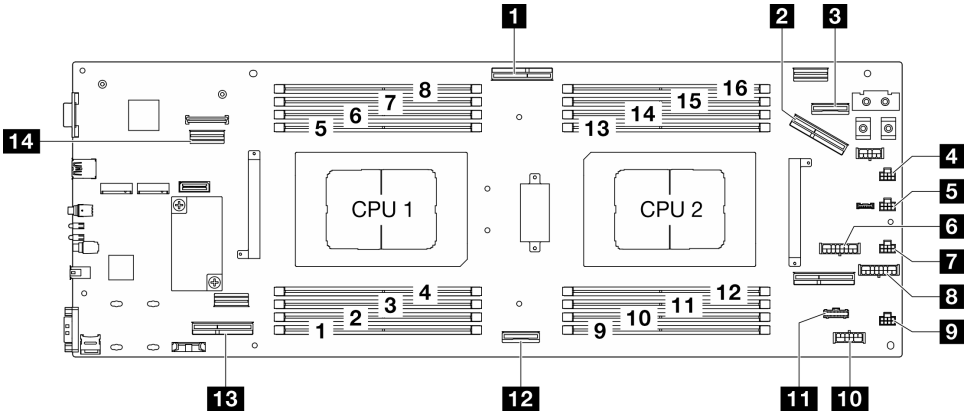

Figure 129. System-board connectors for cable routing

Table 23. **System-board connectors for cable routing**

1 OCP signal connector	8 PCIe riser power connector
2 PCIe riser slot 1 connector (Gen5)	9 Fan 4 connector
3 OCP power and sideband connector	10 P12V AUX power connector
4 Fan 1 connector	11 Node sideband connector
5 Fan 2 connector	12 NVMe 0-1 connector (Gen5)
6 Backplane power connector	13 PCIe riser slot 1 connector (Gen5)
7 Fan 3 connector	14 Rear I/O signal connector

Drive backplane connectors

See this section to locate and identify the connectors on the drive backplane.

E3.S drive backplane

See this section to locate the connectors on the drive backplane.

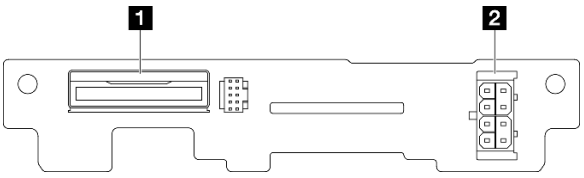

Figure 130. E3.S drive backplane connectors

Table 24. Drive backplane connectors

1 NVMe 0-1	2 Backplane power connector

PCIe riser connectors

See this section to locate and identify the connectors on the PCIe riser card.

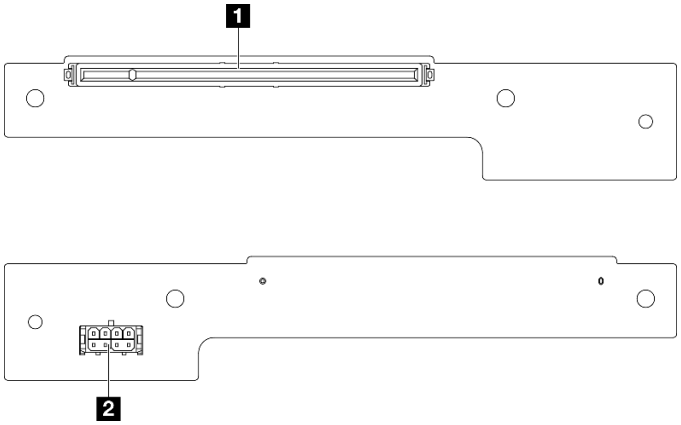

Figure 131. PCIe riser card connectors

Table 25. Gen 5 HH riser card connectors

1 PCIe x16 (Gen5) slot	2 PCIe riser power connector

Power distribution board connectors

See this section to locate and identify the connectors on the power distribution board.

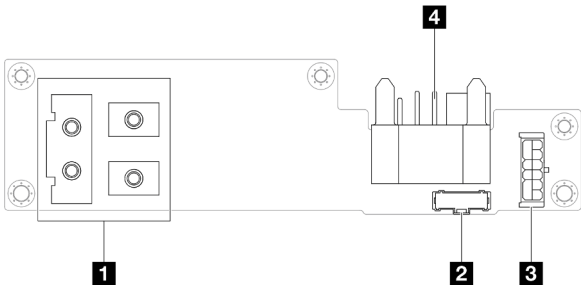

Figure 132. Power distribution board connectors

Table 26. Power distribution board connectors

1 Power bus bar connector	3 Power connector
2 Sideband connector	4 Chassis midplane connector

Rear I/O module connector

See this section to locate and identify the connectors on the rear I/O module.

Table 27. Rear I/O module connector

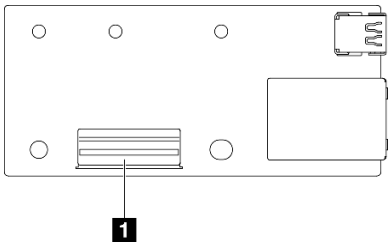	1 Rear I/O signal connector

E3.S drive backplane cable routing

Follow instructions in this section to route the cables for the E3.S drive backplane.

Notes:

- Connections between connectors; 1↔1, 2↔2, 3↔3, ... n↔n
- When routing the cables, make sure that all cables are routed appropriately through the corresponding cable guides and cable clips.
- Strictly observe the following instructions to avoid damaging cable sockets on the system board. Any damage to the cable sockets might require replacing the system board.
  - Connect cable connectors vertically or horizontally in alignment with the orientations of the corresponding cable sockets, avoiding any tilt.
  - To disconnect cables from the system board, do as follows:
    1. Press and hold all latches, release tabs, or locks on cable connectors to release the cable connectors.
    2. Remove the cable connectors vertically or horizontally in alignment with the orientations of the corresponding cable sockets, avoiding any tilt.

       Note: The cable connectors might look different from those in the illustration, but the removal procedure is the same.

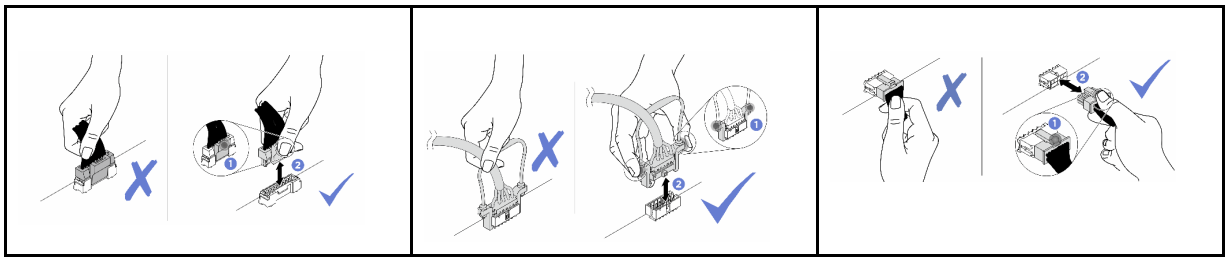

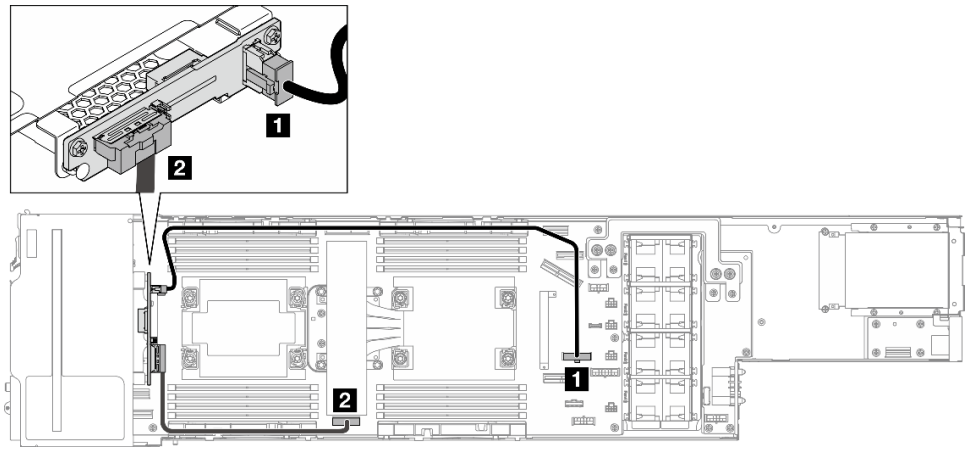

Figure 133. Cable routing for E3.S drive backplane

From (system board)	To (E3.S drive backplane)	Cable
1 Backplane power connector	1 Power connector	Power 2x8 to Power 2x4 (645 mm)
2 NVMe 0-1 connector (Gen5)	2 NVMe 0-1	MCIO x8 to MCIO x8 (315 mm)

Fan cable routing

Follow instructions in this section to route the cables for the fan.

Notes:

- Connections between connectors; 1↔1, 2↔2, 3↔3, ... n↔n
- When routing the cables, make sure that all cables are routed appropriately through the corresponding cable guides and cable clips.
- Manage redundant fan cables as shown in the illustration.
- Strictly observe the following instructions to avoid damaging cable sockets on the system board. Any damage to the cable sockets might require replacing the system board.
  - Connect cable connectors vertically or horizontally in alignment with the orientations of the corresponding cable sockets, avoiding any tilt.
  - To disconnect cables from the system board, do as follows:
    1. Press and hold all latches, release tabs, or locks on cable connectors to release the cable connectors.
    2. Remove the cable connectors vertically or horizontally in alignment with the orientations of the corresponding cable sockets, avoiding any tilt.

       Note: The cable connectors might look different from those in the illustration, but the removal procedure is the same.

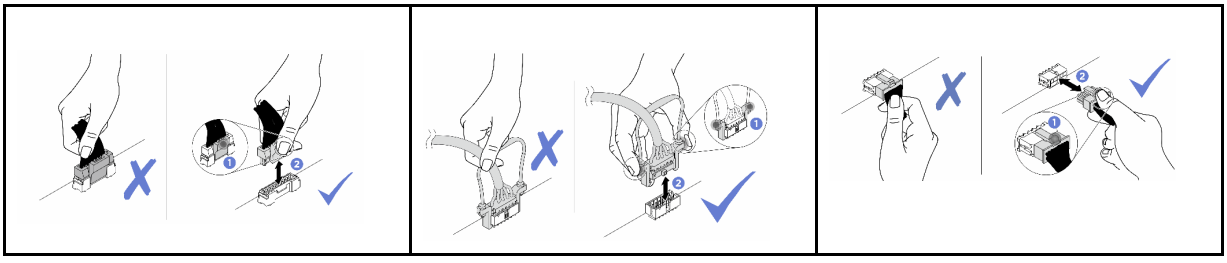

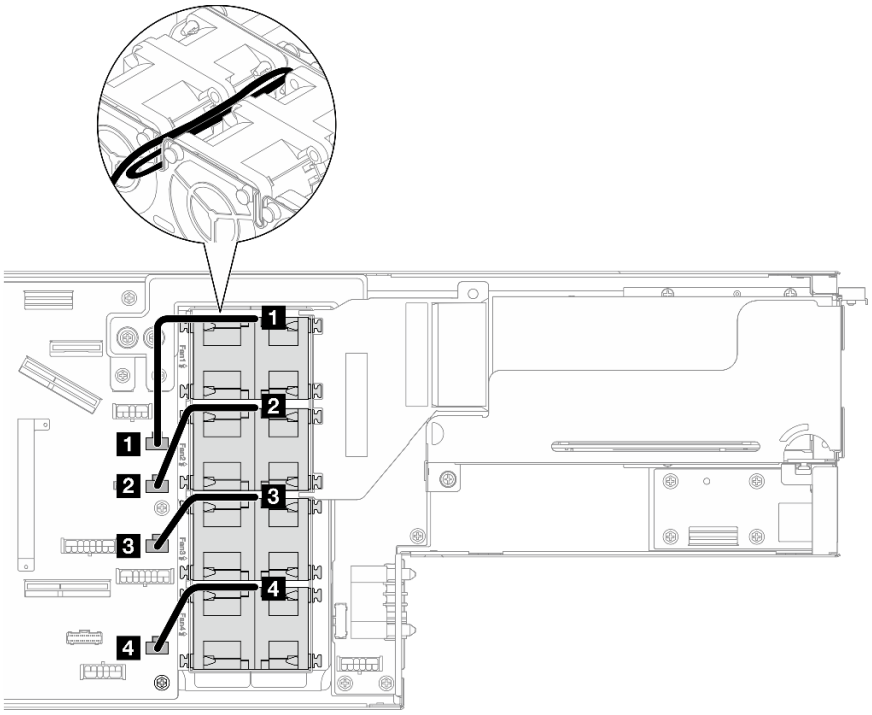

Figure 134. Fan cable routing

From (fan)	To (system board)	Cable length
1 Fan 1 cable	Fan 1 connector	140 mm
2 Fan 2 cable	Fan 2 connector	140 mm
3 Fan 3 cable	Fan 3 connector	140 mm
4 Fan 4 cable	Fan 4 connector	140 mm

PCIe riser cable routing

Follow instructions in this section to route the cables for the PCIe riser.

Notes:

- Depending on the specific configuration, the information in this topic might not apply to your node.
- Connections between connectors; 1↔1, 2↔2, 3↔3, ... n↔n
- When routing the cables, make sure that all cables are routed appropriately through the corresponding cable guides and cable clips.
- Strictly observe the following instructions to avoid damaging cable sockets on the system board. Any damage to the cable sockets might require replacing the system board.
  - Connect cable connectors vertically or horizontally in alignment with the orientations of the corresponding cable sockets, avoiding any tilt.
  - To disconnect cables from the system board, do as follows:
    1. Press and hold all latches, release tabs, or locks on cable connectors to release the cable connectors.
    2. Remove the cable connectors vertically or horizontally in alignment with the orientations of the corresponding cable sockets, avoiding any tilt.

Note: The cable connectors might look different from those in the illustration, but the removal procedure is the same.

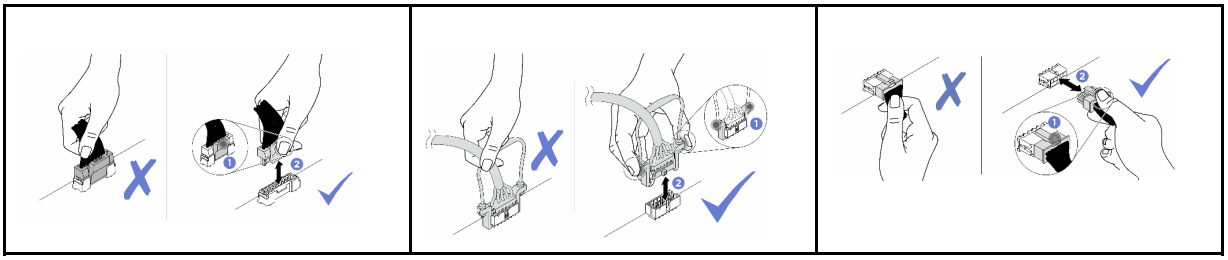

The PCIe riser cable routing contains the following configurations:

- "With one processor" on page 181
- "With two processors" on page 182

With one processor

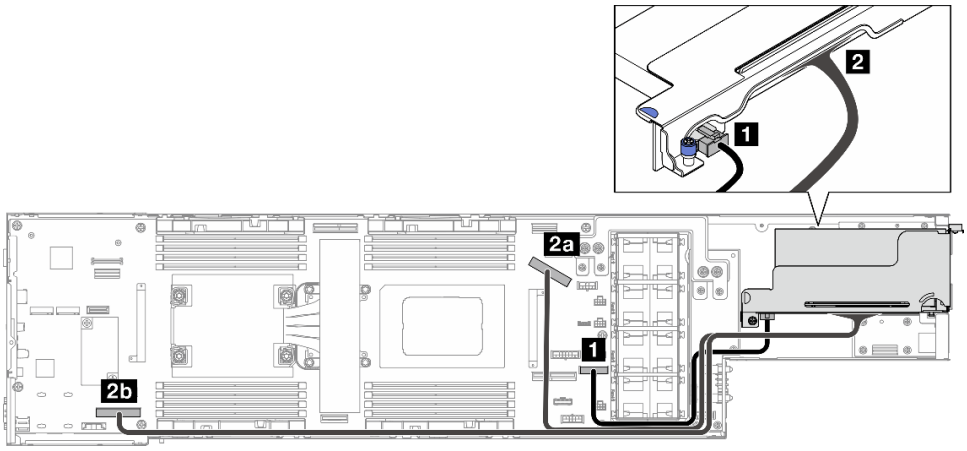

Figure 135. PCIe riser cable routing – one processor

From (system board)	To (PCIe riser)	Cable
1 PCIe riser power connector	1 Power connector	Power 2x8 to Power 2x4 (310 mm)
2a PCIe riser slot 1 connector (Gen5) (sideband)	2 PCIe riser wired cable	PCIe riser to MCIO x16 (340 mm)
2b PCIe riser slot 1 connector (Gen5) (signal)		PCIe riser to MCIO x16 (660 mm)

With two processors

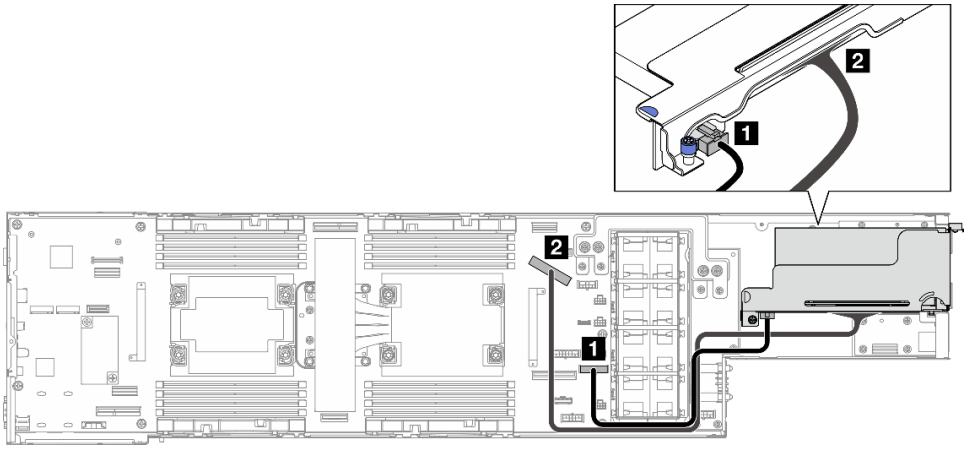

Figure 136. PCIe riser cable routing – two processors

From (system board)	To (PCIe riser)	Cable
1 PCIe riser power connector	1 Power connector	Power 2x8 to Power 2x4 (310 mm)
2 PCIe riser slot 1 connector (Gen5)	2 PCIe riser wired cable	PCIe riser to MCIO x16 (340 mm)

Power distribution board cable routing

Follow instructions in this section to route the cables for the power distribution board.

Notes:

- Connections between connectors; 1↔1, 2↔2, 3↔3, ... n↔n
- When routing the cables, make sure that all cables are routed appropriately through the corresponding cable guides and cable clips.
- Strictly observe the following instructions to avoid damaging cable sockets on the system board. Any damage to the cable sockets might require replacing the system board.
  - Connect cable connectors vertically or horizontally in alignment with the orientations of the corresponding cable sockets, avoiding any tilt.
  - To disconnect cables from the system board, do as follows:
    1. Press and hold all latches, release tabs, or locks on cable connectors to release the cable connectors.
    2. Remove the cable connectors vertically or horizontally in alignment with the orientations of the corresponding cable sockets, avoiding any tilt.

       Note: The cable connectors might look different from those in the illustration, but the removal procedure is the same.

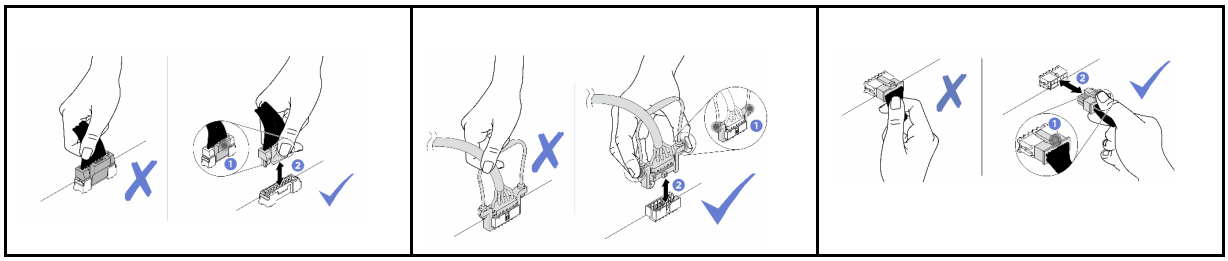

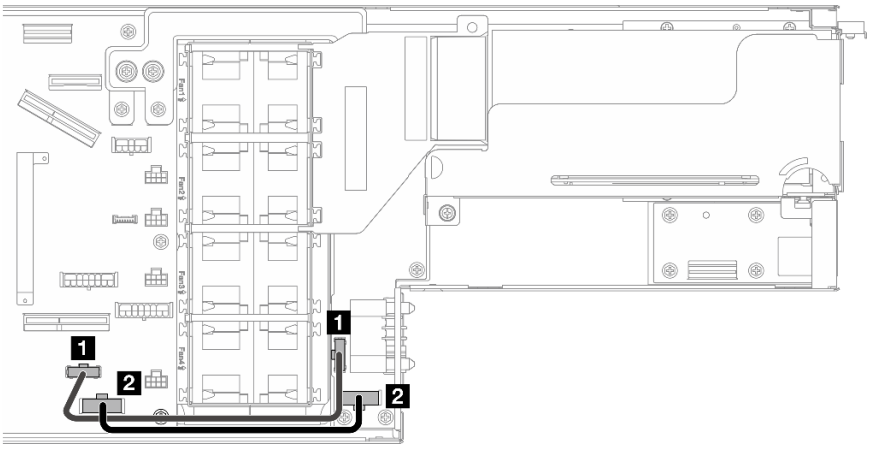

Figure 137. Cable routing for the power distribution board

From (power distribution board)	To (system board)	Cable
1 PDB sideband connector	1 Node sideband connector	Sideband 2x15 to sideband 2x15 (180 mm)
2 PDB P12V AUX power connector	2 P12V AUX power connector	Power 2x6 to power 2x6 (200 mm)

Rear I/O and OCP module cable routing

Follow instructions in this section to install and route the cables for the rear I/O module and OCP module.

Notes:

- Connections between connectors; 1↔1, 2↔2, 3↔3, ... n↔n
- When routing the cables, make sure that all cables are routed appropriately through the corresponding cable guides and cable clips.
- Strictly observe the following instructions to avoid damaging cable sockets on the system board. Any damage to the cable sockets might require replacing the system board.
  - Connect cable connectors vertically or horizontally in alignment with the orientations of the corresponding cable sockets, avoiding any tilt.
  - To disconnect cables from the system board, do as follows:
    1. Press and hold all latches, release tabs, or locks on cable connectors to release the cable connectors.
    2. Remove the cable connectors vertically or horizontally in alignment with the orientations of the corresponding cable sockets, avoiding any tilt.

       Note: The cable connectors might look different from those in the illustration, but the removal procedure is the same.

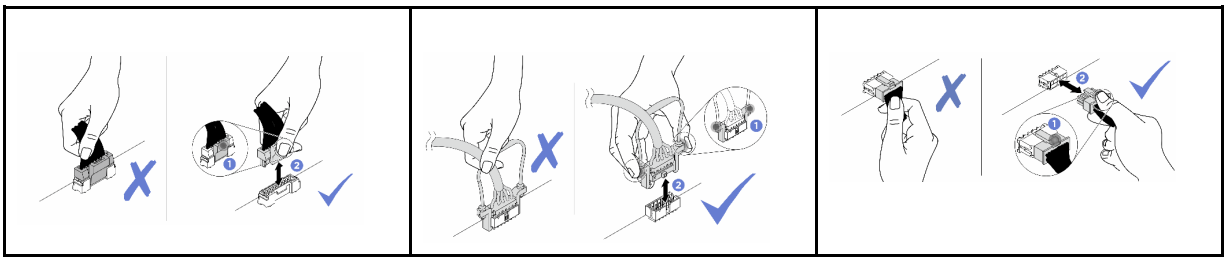

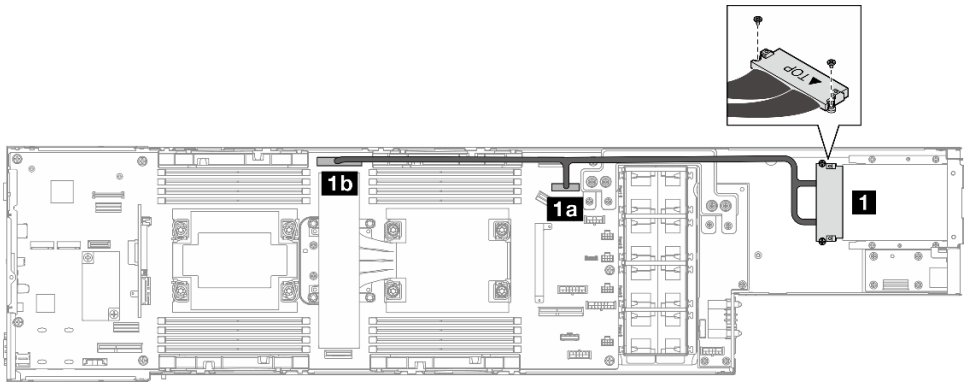

Figure 138. Cables for the rear I/O module and OCP module

From	To (system board)	Cable
1 Node bottom (secured with screws)	1a OCP power and sideband connector	OCP connector to MCIO x8 (270 mm)
	1b OCP signal connector	OCP connector to MCIO x16 (450 mm)

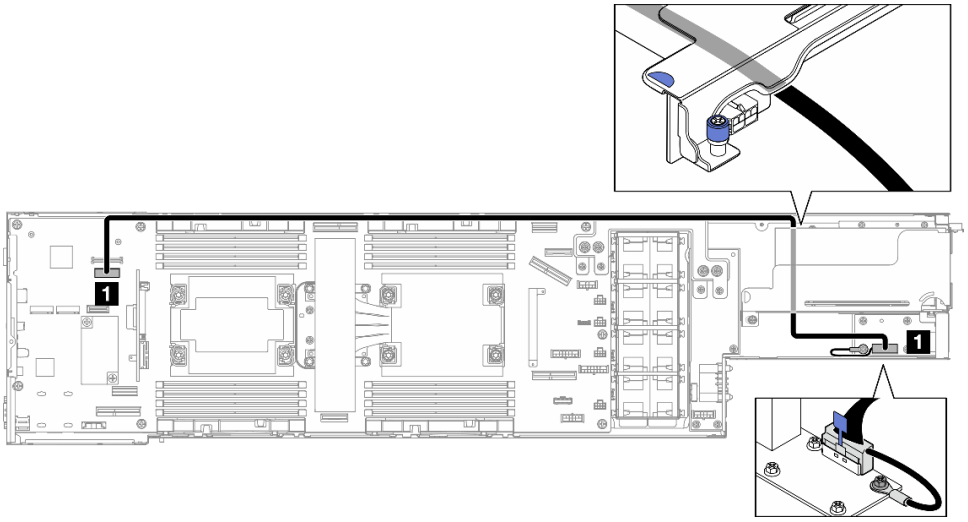

From	To (system board)	Cable
1 Rear I/O signal connector (on the rear I/O module)	1 Rear I/O signal connector	Low-profile SlimSAS x8 to low-profile SlimSAS x8 (915 mm)

Note: When connecting the rear I/O cable to the rear I/O module, make sure to secure the attached grounding cable with a screw.

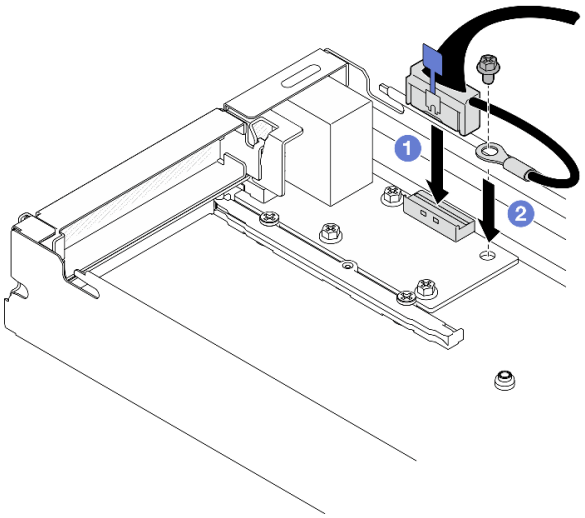

Figure 139. Installation of the rear I/O cable and grounding cable

Chapter 7. System configuration

Complete these procedures to configure your system.

Set the network connection for the Lenovo XClarity Controller

Before you can access the Lenovo XClarity Controller over your network, you need to specify how Lenovo XClarity Controller will connect to the network. Depending on how the network connection is implemented, you might need to specify a static IP address as well.

The following methods are available to set the network connection for the Lenovo XClarity Controller if you are not using DHCP:

- If a monitor is attached to the server, you can use Lenovo XClarity Provisioning Manager to set the network connection.

  Complete the following steps to connect the Lenovo XClarity Controller to the network using the Lenovo XClarity Provisioning Manager.

  1. Start the server.
  2. Press the key specified in the on-screen instructions to display the Lenovo XClarity Provisioning Manager interface. (For more information, see the “Startup” section in the LXPM documentation compatible with your server at https://pubs.lenovo.com/lxpm-overview/.)
  3. Go to **LXPM → UEFI Setup → BMC Settings** to specify how the Lenovo XClarity Controller will connect to the network.
     - If you choose a static IP connection, make sure that you specify an IPv4 or IPv6 address that is available on the network.
     - If you choose a DHCP connection, make sure that the MAC address for the server has been configured in the DHCP server.
  4. Click **OK** to apply the setting and wait for two to three minutes.
  5. Use an IPv4 or IPv6 address to connect Lenovo XClarity Controller.

     Important: The Lenovo XClarity Controller is set initially with a user name of USERID and password of PASSW0RD (with a zero, not the letter O). This default user setting has Supervisor access. It is required to change this user name and password during your initial configuration for enhanced security.
- If no monitor is attached to the server, you can set the network connection through the Lenovo XClarity Controller interface. Connect an Ethernet cable from your laptop to XCC system management port (10/100/1000 Mbps RJ-45) on your server. For the location of the XCC system management port (10/100/1000 Mbps RJ-45), see Chapter 2 “Hardware components” on page 19.

  Note: Make sure that you modify the IP settings on the laptop so that it is on the same network as the server default settings.

  The default IPv4 address and the IPv6 Link Local Address (LLA) is provided on the Lenovo XClarity Controller Network Access label that is affixed to the Pull Out Information Tab. See “Identify the system and access the Lenovo XClarity Controller” on page 33.
- If you are using the Lenovo XClarity Administrator Mobile app from a mobile device, you can connect to the Lenovo XClarity Controller through the Lenovo XClarity Controller USB connector on the server. For the location of the Lenovo XClarity Controller USB connector, see Chapter 2 “Hardware components” on page 19.

© Copyright Lenovo 2025

Note: The Lenovo XClarity Controller USB connector mode must be set to manage the Lenovo XClarity Controller (instead of normal USB mode). To switch from normal mode to Lenovo XClarity Controller management mode, hold the ID button on the server for at least 3 seconds until its LED flashes slowly (once every couple of seconds). See Chapter 2 “Hardware components” on page 19 for the location of the ID button.

To connect using the Lenovo XClarity Administrator Mobile app:

1. Connect the USB cable of your mobile device to the Lenovo XClarity Controller USB connector on the server.
2. On your mobile device, enable USB tethering.
3. On your mobile device, launch the Lenovo XClarity Administrator mobile app.
4. If automatic discovery is disabled, click **Discovery** on the USB Discovery page to connect to the Lenovo XClarity Controller.

For more information about using the Lenovo XClarity Administrator Mobile app, see:

https://pubs.lenovo.com/lxca/lxca_usemobileapp

Set USB port for Lenovo XClarity Controller connection

Before you can access the Lenovo XClarity Controller through the USB port, you need to configure the USB port for Lenovo XClarity Controller connection.

Server support

To see if your server supports accessing Lenovo XClarity Controller through the USB port, check one of the following:

- Refer to Chapter 2 “Hardware components” on page 19.
-  If there is a wrench icon on the USB port of your server, you can set the management USB port to connect to Lenovo XClarity Controller. It is also the only USB port that supports USB automation update of the firmware and RoT security module.

Setting the USB management port for Lenovo XClarity Controller connection

You can switch the USB port between normal and Lenovo XClarity Controller management operation by performing one of the following steps.

- Hold the ID button for at least 3 second until its LED flashes slowly (once every couple of seconds). See Chapter 2 “Hardware components” on page 19 for ID button location.
- From the Lenovo XClarity Controller management controller CLI, run the `usbfp` command. For information about using the Lenovo XClarity Controller CLI, see the “Command-line interface” section in the XCC documentation compatible with your server at https://pubs.lenovo.com/lxcc-overview/.
- From the Lenovo XClarity Controller management controller web interface, click **BMC Configuration → Network → USB Management Port Assignment**. For information about Lenovo XClarity Controller web interface functions, see the “Description of XClarity Controller functions on web interface” section in the XCC documentation compatible with your server at https://pubs.lenovo.com/lxcc-overview/.

Checking USB port current setting

You can also check the current setting of the USB port using the Lenovo XClarity Controller management controller CLI (`usbfp` command) or the Lenovo XClarity Controller management controller web interface (**BMC Configuration → Network → USB Management Port Assignment**). See the “Command-line

interface” and “Description of XClarity Controller functions on web interface” sections in the XCC documentation compatible with your server at https://pubs.lenovo.com/lxcc-overview/.

Update the firmware

Several options are available to update the firmware for the system.

The tools listed here can be used to update the most current firmware for the chassis, nodes, and the devices that are installed in the system.

- Best practices related to updating firmware is available at the following site:
  - https://lenovopress.lenovo.com/lp0656-lenovo-thinksystem-firmware-and-driver-update-best-practices
- The latest firmware can be found at the following site:
  - https://datacentersupport.lenovo.com/products/servers/thinksystem/sd530v3/7dd3/downloads/driver-list
- You can subscribe to product notification to stay up to date on firmware updates:
  - https://datacentersupport.lenovo.com/solutions/ht509500

Update Bundles (Service Packs)

Lenovo typically releases firmware in bundles called Update Bundles (Service Packs). To ensure that all of the firmware updates are compatible, you should update all firmware at the same time. If you are updating firmware for both the Lenovo XClarity Controller and UEFI, update the firmware for Lenovo XClarity Controller first.

Update method terminology

- **In-band update.** The installation or update is performed using a tool or application within an operating system that is executing on the server’s core CPU.
- **Out-of-band update.** The installation or update is performed by the Lenovo XClarity Controller collecting the update and then directing the update to the target subsystem or device. Out-of-band updates have no dependency on an operating system executing on the core CPU. However, most out-of-band operations do require the server to be in the S0 (Working) power state.
- **On-Target update.** The installation or update is initiated from an installed operating system executing on the target server itself.
- **Off-Target update.** The installation or update is initiated from a computing device interacting directly with the server’s Lenovo XClarity Controller.
- **Update Bundles (Service Packs).** Update Bundles (Service Packs) are bundled updates designed and tested to provide the interdependent level of functionality, performance, and compatibility. Update Bundles (Service Packs) are server machine-type specific and are built (with firmware and device driver updates) to support specific Windows Server, Red Hat Enterprise Linux (RHEL) and SUSE Linux Enterprise Server (SLES) operating system distributions. Machine-type-specific firmware-only Update Bundles (Service Packs) are also available.

Firmware updating tools

See the following table to determine the best Lenovo tool to use for installing and setting up the firmware:

Tool	Update Methods Supported	Core System Firmware Updates	I/O Devices Firmware Updates	Drive Firmware Updates	Graphical user interface	Command line interface	Supports Static Bundles (Service Packs)	Chassis Midplane PSoC Firmware Update
Lenovo XClarity Provisioning Manager (LXPM)	In-band[2] On-Target	√			√			
Lenovo XClarity Controller (XCC)	In-band[4] Out-of-band Off-Target	√	Selected I/O devices	√[3]	√		√	√
Lenovo XClarity Essentials OneCLI (OneCLI)	In-band Out-of-band On-Target Off-Target	√	All I/O devices	√[3]		√	√	√
Lenovo XClarity Essentials UpdateXpress (LXCE)	In-band Out-of-band On-Target Off-Target	√	All I/O devices		√		√	
Lenovo XClarity Essentials Bootable Media Creator (BoMC)	In-band Out-of-band Off-Target	√	All I/O devices		√ (BoMC application)	√ (BoMC application)	√	
Lenovo XClarity Administrator (LXCA)	In-band[1] Out-of-band[2] Off-Target	√	All I/O devices		√		√	

Tool	Update Methods Supported	Core System Firmware Updates	I/O Devices Firmware Updates	Drive Firmware Updates	Graphical user interface	Command line interface	Supports Static Bundles (Service Packs)	Chassis Midplane PSoC Firmware Update
Lenovo XClarity Integrator (LXCI) for VMware vCenter	Out-of-band Off-Target	√	Selected I/O devices		√			
Lenovo XClarity Integrator (LXCI) for Microsoft Windows Admin Center	In-band Out-of-band On-Target Off-Target	√	All I/O devices		√		√	
Lenovo XClarity Integrator (LXCI) for Microsoft System Center Configuration Manager	In-band On-Target	√	All I/O devices		√		√	

Notes:

1. For I/O firmware updates.
2. For BMC and UEFI firmware updates.
3. Drive firmware update is only supported by the tools and methods below:
   - XCC Bare Metal Update (BMU): In-band, and requires system reboot.
   - Lenovo XClarity Essentials OneCLI:
     - For OneCLI version earlier than 5.0.0:
       - For drives supported by ThinkSystem V2 and V3 products (legacy drives): In-band, and does not require system reboot.
       - For drives supported only by ThinkSystem V3 products (new drives): Staging to XCC and complete the update with XCC BMU (In-band, and requires system reboot.).
     - For OneCLI 5.0.0 and later versions: In-band, and does not require system reboot.
4. Bare Metal Update (BMU) only.

- **Lenovo XClarity Provisioning Manager**

  From Lenovo XClarity Provisioning Manager, you can update the Lenovo XClarity Controller firmware, the UEFI firmware, and the Lenovo XClarity Provisioning Manager software.

  Note: By default, the Lenovo XClarity Provisioning Manager Graphical User Interface is displayed when you start the server and press the key specified in the on-screen instructions. If you have changed that default to be the text-based system setup, you can bring up the Graphical User Interface from the text-based system setup interface.

  For additional information about using Lenovo XClarity Provisioning Manager to update firmware, see:

"Firmware Update" section in the LXPM documentation compatible with your server at https://pubs.lenovo.com/lxpm-overview/

- **Lenovo XClarity Controller**

  If you need to install a specific update, you can use the Lenovo XClarity Controller interface for a specific server.

  Notes:

  – To perform an in-band update through Windows or Linux, the operating system driver must be installed and the Ethernet-over-USB (sometimes called LAN over USB) interface must be enabled.

    For additional information about configuring Ethernet over USB, see:

    "Configuring Ethernet over USB" section in the XCC documentation version compatible with your server at https://pubs.lenovo.com/lxcc-overview/

  – If you update firmware through the Lenovo XClarity Controller, make sure that you have downloaded and installed the latest device drivers for the operating system that is running on the server.

  For additional information about using Lenovo XClarity Controller to update firmware, see:

  "Updating Server Firmware" section in the XCC documentation compatible with your server at https://pubs.lenovo.com/lxcc-overview/

- **Lenovo XClarity Essentials OneCLI**

  Lenovo XClarity Essentials OneCLI is a collection of command line applications that can be used to manage Lenovo servers. Its update application can be used to update firmware and device drivers for your servers. The update can be performed within the host operating system of the server (in-band) or remotely through the BMC of the server (out-of-band).

  For additional information about using Lenovo XClarity Essentials OneCLI to update firmware, see:

  https://pubs.lenovo.com/lxce-onecli/onecli_c_update

- **Lenovo XClarity Essentials UpdateXpress**

  Lenovo XClarity Essentials UpdateXpress provides most of OneCLI update functions through a graphical user interface (GUI). It can be used to acquire and deploy Static Bundle update packages and individual updates. Static Bundle contain firmware and device driver updates for Microsoft Windows and for Linux.

  You can obtain Lenovo XClarity Essentials UpdateXpress from the following location:

  https://datacentersupport.lenovo.com/solutions/lnvo-xpress

- **Lenovo XClarity Essentials Bootable Media Creator**

  You can use Lenovo XClarity Essentials Bootable Media Creator to create bootable media that is suitable for firmware updates, VPD updates, inventory and FFDC collection, advanced system configuration, FoD Keys management, secure erase, RAID configuration, and diagnostics on supported servers.

  You can obtain Lenovo XClarity Essentials BoMC from the following location:

  https://datacentersupport.lenovo.com/solutions/lnvo-bomc

- **Lenovo XClarity Administrator**

  If you are managing multiple servers using the Lenovo XClarity Administrator, you can update firmware for all managed servers through that interface. Firmware management is simplified by assigning firmware-compliance policies to managed endpoints. When you create and assign a compliance policy to managed endpoints, Lenovo XClarity Administrator monitors changes to the inventory for those endpoints and flags any endpoints that are out of compliance.

  For additional information about using Lenovo XClarity Administrator to update firmware, see:

https://pubs.lenovo.com/lxca/update_fw

- **Lenovo XClarity Integrator offerings**

  Lenovo XClarity Integrator offerings can integrate management features of Lenovo XClarity Administrator and your server with software used in a certain deployment infrastructure, such as VMware vCenter, Microsoft Admin Center, or Microsoft System Center.

  For additional information about using Lenovo XClarity Integrator to update firmware, see:

  https://pubs.lenovo.com/lxci-overview/

Configure the firmware

Several options are available to install and set up the firmware for the server.

Note: UEFI **Legacy Mode** is not supported by ThinkSystem V4 products.

- **Lenovo XClarity Provisioning Manager (LXPM)**

  From Lenovo XClarity Provisioning Manager, you can configure the UEFI settings for your server.

  Notes: The Lenovo XClarity Provisioning Manager provides a Graphical User Interface to configure a server. The text-based interface to system configuration (the Setup Utility) is also available. From Lenovo XClarity Provisioning Manager, you can choose to restart the server and access the text-based interface. In addition, you can choose to make the text-based interface the default interface that is displayed when you start LXPM. To do this, go to **Lenovo XClarity Provisioning Manager → UEFI Setup → System Settings → <F1>Start Control → Text Setup**. To start the server with Graphic User Interface, select **Auto** or **Tool Suite**.

  See the following documentations for more information:

  - Search for the LXPM documentation version compatible with your server at https://pubs.lenovo.com/lxpm-overview/
  - *UEFI User Guide* at https://pubs.lenovo.com/uefi-overview/

- **Lenovo XClarity Essentials OneCLI**

  You can use the config application and commands to view the current system configuration settings and make changes to Lenovo XClarity Controller and UEFI. The saved configuration information can be used to replicate or restore other systems.

  For information about configuring the server using Lenovo XClarity Essentials OneCLI, see:

  https://pubs.lenovo.com/lxce-onecli/onecli_c_settings_info_commands

- **Lenovo XClarity Administrator**

  You can quickly provision and pre-provision all of your servers using a consistent configuration. Configuration settings (such as local storage, I/O adapters, boot settings, firmware, ports, and Lenovo XClarity Controller and UEFI settings) are saved as a server pattern that can be applied to one or more managed servers. When the server patterns are updated, the changes are automatically deployed to the applied servers.

  Specific details about configuring the server using Lenovo XClarity Administrator are available at:

  https://pubs.lenovo.com/lxca/server_configuring

- **Lenovo XClarity Controller**

  You can configure the management processor for the server through the Lenovo XClarity Controller Web interface, the command-line interface, or Redfish API.

For information about configuring the server using Lenovo XClarity Controller, see:

"Configuring the Server" section in the XCC documentation compatible with your server at https://pubs.lenovo.com/lxcc-overview/

Memory module configuration

Memory performance depends on several variables, such as memory mode, memory speed, memory ranks, memory population and processor.

Information about optimizing memory performance and configuring memory is available at the Lenovo Press website:

https://lenovopress.lenovo.com/servers/options/memory

In addition, you can take advantage of a memory configurator, which is available at the following site:

https://dcsc.lenovo.com/#/memory_configuration

Enable Software Guard Extensions (SGX)

Intel® Software Guard Extensions (Intel® SGX) operates under the assumption that the security perimeter includes only the internals of the CPU package, and leaves the DRAM untrusted.

Complete the following steps to enable SGX.

Step 1. **Make sure** to refer to "Memory module installation rules and order" on page 42, which specifies whether your sever supports SGX and lists the memory module population sequence for SGX configuration. (DIMM configuration must be at least 8 DIMMs per socket to support SGX.)

Step 2. Restart the system. Before the operating system starts up, press the key specified in the on-screen instructions to enter the Setup Utility. (For more information, see the "Startup" section in the LXPM documentation compatible with your server at https://pubs.lenovo.com/lxpm-overview/.)

Step 3. Go to **System settings → Processors → Total Memory Encryption (TME)** and enable the option.

Step 4. Save the changes, then go to **System settings → Processors → SW Guard Extension (SGX)** and enable the option.

RAID configuration

Using a Redundant Array of Independent Disks (RAID) to store data remains one of the most common and cost-efficient methods to increase server's storage performance, availability, and capacity.

RAID increases performance by allowing multiple drives to process I/O requests simultaneously. RAID can also prevent data loss in case of a drive failure by reconstructing (or rebuilding) the missing data from the failed drive using the data from the remaining drives.

RAID array (also known as RAID drive group) is a group of multiple physical drives that uses a certain common method to distribute data across the drives. A virtual drive (also known as virtual disk or logical drive) is a partition in the drive group that is made up of contiguous data segments on the drives. Virtual drive is presented up to the host operating system as a physical disk that can be partitioned to create OS logical drives or volumes.

An introduction to RAID is available at the following Lenovo Press website:

https://lenovopress.lenovo.com/lp0578-lenovo-raid-introduction

Detailed information about RAID management tools and resources is available at the following Lenovo Press website:

https://lenovopress.lenovo.com/lp0579-lenovo-raid-management-tools-and-resources

Intel VROC

Enabling Intel VROC

Before setting up RAID for NVMe drives, follow the below steps to enable VROC:

1. Restart the system. Before the operating system starts up, press the key specified in the on-screen instructions to enter the Setup Utility. (For more information, see the “Startup” section in the LXPM documentation compatible with your server at https://pubs.lenovo.com/lxpm-overview/.)
2. Go to **System settings → Devices and I/O Ports → Intel® VMD technology → Enable/Disable Intel® VMD** and enable the option.
3. Save the changes and reboot the system.

Intel VROC configurations

Intel offers various VROC configurations with different RAID level and SSD support. See the following for more details.

Notes:
- Supported RAID levels varies by model. For the RAID level supported by SD530 V3, see Node technical specifications.
- For more information about acquiring and installing the activation key, see https://fod.lenovo.com/lkms.

Intel VROC configurations for PCIe NVMe SSDs	**Requirements**
Intel VROC Standard	• Supports RAID levels 0, 1, and 10 • Requires an activation key
Intel VROC Premium	• Supports RAID levels 0, 1, 5, and 10 • Requires an activation key
Bootable RAID	• RAID 1 only • Requires an activation key • Supported processors: – 5th Gen Intel® Xeon® Scalable processors (formerly codenamed as Emerald Rapids, EMR) – 6th Gen Intel® Xeon® Scalable processors with P-cores (formerly codenamed as Granite Rapids-SP, GNR-SP) – 6th Gen Intel® Xeon® Scalable processors with E-cores (formerly codenamed as Sierra Forest-SP, SRF-SP)
Intel VROC configurations for SATA SSDs	**Requirements**
Intel VROC SATA RAID	• Supports RAID levels 0, 1, 5, and 10. • Not supported by Granite Rapids-SP (GNR-SP) processors and Sierra Forest-SP (SRF-SP) processors.

Deploy the operating system

Several options are available to deploy an operating system on the server.

Available operating systems

- Microsoft Windows Server
- VMware ESXi
- Red Hat Enterprise Linux
- SUSE Linux Enterprise Server

Complete list of available operating systems: https://lenovopress.lenovo.com/osig.

Tool-based deployment

- **Multi-server**

  Available tools:

  – Lenovo XClarity Administrator

  https://pubs.lenovo.com/lxca/compute_node_image_deployment

  – Lenovo XClarity Essentials OneCLI

  https://pubs.lenovo.com/lxce-onecli/onecli_r_uxspi_proxy_tool

- **Single-server**

  Available tools:

  – Lenovo XClarity Provisioning Manager

  "OS Installation" section in the LXPM documentation compatible with your server at https://pubs.lenovo.com/lxpm-overview/

  – Lenovo XClarity Essentials OneCLI

  https://pubs.lenovo.com/lxce-onecli/onecli_r_uxspi_proxy_tool

Manual deployment

If you cannot access the above tools, follow the instructions below, download the corresponding *OS Installation Guide*, and deploy the operating system manually by referring to the guide.

1. Go to https://datacentersupport.lenovo.com/solutions/server-os.
2. Select an operating system from the navigation pane and click **Resources**.
3. Locate the "OS Install Guides" area and click the installation instructions. Then, follow the instructions to complete the operation system deployment task.

Back up the server configuration

After setting up the server or making changes to the configuration, it is a good practice to make a complete backup of the server configuration.

Make sure that you create backups for the following server components:

- **Management processor**

  You can back up the management processor configuration through the Lenovo XClarity Controller interface. For details about backing up the management processor configuration, see:

  "Backing up the BMC configuration" section in the XCC documentation compatible with your server at https://pubs.lenovo.com/lxcc-overview/.

  Alternatively, you can use the `save` command from Lenovo XClarity Essentials OneCLI to create a backup of all configuration settings. For more information about the `save` command, see:

https://pubs.lenovo.com/lxce-onecli/onecli_r_save_command

- **Operating system**

  Use your backup methods to back up the operating system and user data for the server.

Enable Intel® On Demand

A processor is equipped with various computing capabilities. Basic capabilities are available at the initial processor installation, while others remain inactivated. As development environment and tasks evolve, computing demands may accelerate and require leverage of the previously inactivated processor capabilities. In such cases, user can select desired processor capabilities and activate them through Intel On Demand feature—a feature that allows user to customize processor capabilities according to environment and tasks at hand. The following section specifies system hardware and software requirement, Intel On Demand enabling and transferring procedures, and list of processor capabilities.

This documentation includes the following sections:
- “Supported processor” on page 197
- “Installation tool” on page 197
- Procedures for “Enabling Intel On Demand Features” on page 198
- Procedures for “Transferring Intel On Demand Features” on page 199
- XCC and LXCE OneCLI instructions for:
  - “Reading PPIN” on page 199
  - “Installing Intel On Demand to processor” on page 201
  - “Acquiring and uploading Intel On Demand State Report” on page 202
  - “Checking the Intel On Demand features installed in a processor” on page 204

Note: Depending on the model, the XCC Web GUI layout may be slightly different from the illustrations in this document.

Supported processor

Intel On Demand is only supported by Intel On Demand capable processors. For more information on Intel On Demand capable processors supported by SD530 V3, see https://lenovopress.lenovo.com/lp1853-thinksystem-sd530-v3-server.

Note: All processors in a system must be installed with identical Intel On Demand feature.

Installation tool

Intel On Demand can be installed via Lenovo XClarity Controller (XCC) and Lenovo XClarity Essentials OneCLI (LXCE OneCLI). After confirming that your processor supports Intel On Demand, you also need to make sure the XCC and LXCE OneCLI installed in your system supports installing Intel On Demand.

1. Check if Lenovo XClarity Controller (XCC) supports installing Intel On Demand (two methods provided):

   - **Via XCC WebGUI**

     Go to **BMC Configuration → License**, if there is a section named **On Demand Capabilities for Intel CPU** in the page, it indicates that current XCC supports installing Intel On Demand, otherwise you need to update XCC firmware to the latest version to ensure it supports installing Intel On Demand.

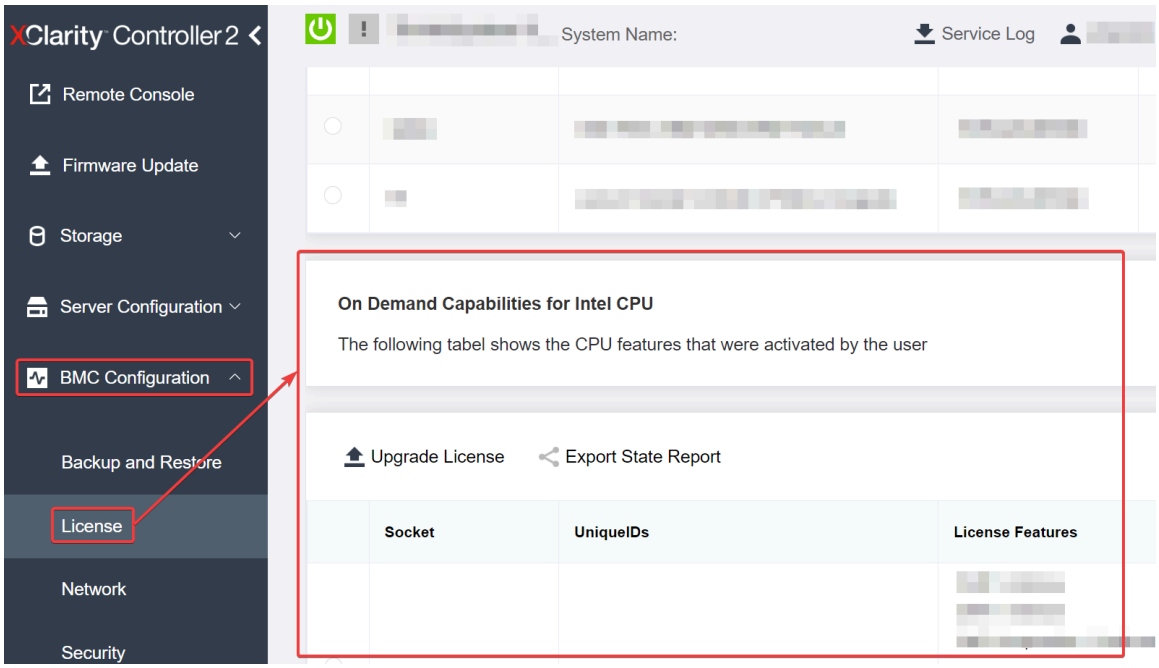

Figure 140. On Demand Capabilities for Intel CPU in XCC Web GUI

- **Via XCC REST API**
  a. Use the **GET** method with the following Request URL:
  `GET https://bmc_ip/redfish/v1/LicenseService/Licenses/`
  b. In the response JSON object, the `Members` field includes the API such as `/redfish/v1/LicenseService/Licenses/CPUX_OnDemandCapability`, where `X` is the CPU numbering, it indicates that current XCC supports installing Intel On Demand, otherwise you need to update XCC firmware to the latest version to ensure it supports installing Intel On Demand.

  For example:

```
"Members": [
        {
            "@odata.id": "/redfish/v1/LicenseService/Licenses/CPU1_OnDemandCapability"
        },
        {
            "@odata.id": "/redfish/v1/LicenseService/Licenses/CPU2_OnDemandCapability"
        },
    ]
```

2. Check if LXCE OneCLI supports installing Intel On Demand
   - LXCE OneCLI version must be at 4.2.0 or above.

Enabling Intel On Demand Features

1. Select the Intel On Demand features that meets your workload needs, see “Intel On Demand Features” on page 205.
2. After completing ordering the features, you will receive Authorization Code via e-mail.
3. PPIN is a mandatory information for enabling the features. Read the PPIN of the processor that is to be installed with the features. See “Reading PPIN” on page 199.
4. Go to https://fod.lenovo.com/lkms and input the Authorization Code to acquire the Activation Key.
5. In the website, input Machine Type, Machine serial number, and PPIN.
6. The website will generate the Activation Key. Download the Activation Key.

7. Install the features to the processor with the Activation Key via XCC or LXCE OneCLI. See “Installing Intel On Demand to processor” on page 201.

   Note: If more than one Activation Keys are acquired, it is mandatory to install them in the sequential order they were acquired. For example, start with installing the first acquired key, and proceed with the second acquired key, and so on.
8. AC cycle the server.
9. (Optional) Upload Intel On Demand State Report. See “Acquiring and uploading Intel On Demand State Report” on page 202.

   The State Report represents the current configuration state of the Intel On Demand capable processors. Lenovo accepts State Reports from customers to calibrate the current state of the Intel On Demand capable processors.
10. To see the features installed in a processor, see “Checking the Intel On Demand features installed in a processor” on page 204.

For reference, see https://pubs.lenovo.com/lenovo_fod.

Transferring Intel On Demand Features

After replacing a processor, you may need to transfer the features from the defective processor to the new processor. Complete the following steps to transfer features to new processor.

1. Before removing the defective processor from the system, read the PPIN of the defective processor. See “Reading PPIN” on page 199.
2. After installing the new processor, read the PPIN of the new processor. See “Reading PPIN” on page 199.
3. Go to https://fod.lenovo.com/lkms and input the PPIN of the defective processor. (Input PPIN in the UID section.)
4. Select the features to be transferred.
5. Input the PPIN of the new processor.
6. The website will generate the new Activation Key. Download the new Activation Key. See “Installing Intel On Demand to processor” on page 201.
7. Install the features to the new processor with the new Activation Key via XCC or LXCE OneCLI.
8. AC cycle the server.
9. (Optional) Upload Intel On Demand State Report. See “Acquiring and uploading Intel On Demand State Report” on page 202.

   The State Report represents the current configuration state of the Intel On Demand capable processors. Lenovo accepts State Reports from customers to calibrate the current state of the Intel On Demand capable processors.
10. To see the features installed in a processor, see “Checking the Intel On Demand features installed in a processor” on page 204.

For reference, see https://pubs.lenovo.com/lenovo_fod.

Reading PPIN

Protected Processor Inventory Number, or PPIN, is a mandatory information for enabling Intel On Demand. PPIN can be read via XCC Web GUI, XCC REST API, and LXCE OneCLI. See the following for more information.

Reading PPIN via XCC Web GUI

Open XCC Web GUI, go to **Inventory page → CPU tab → Expand → PPIN**

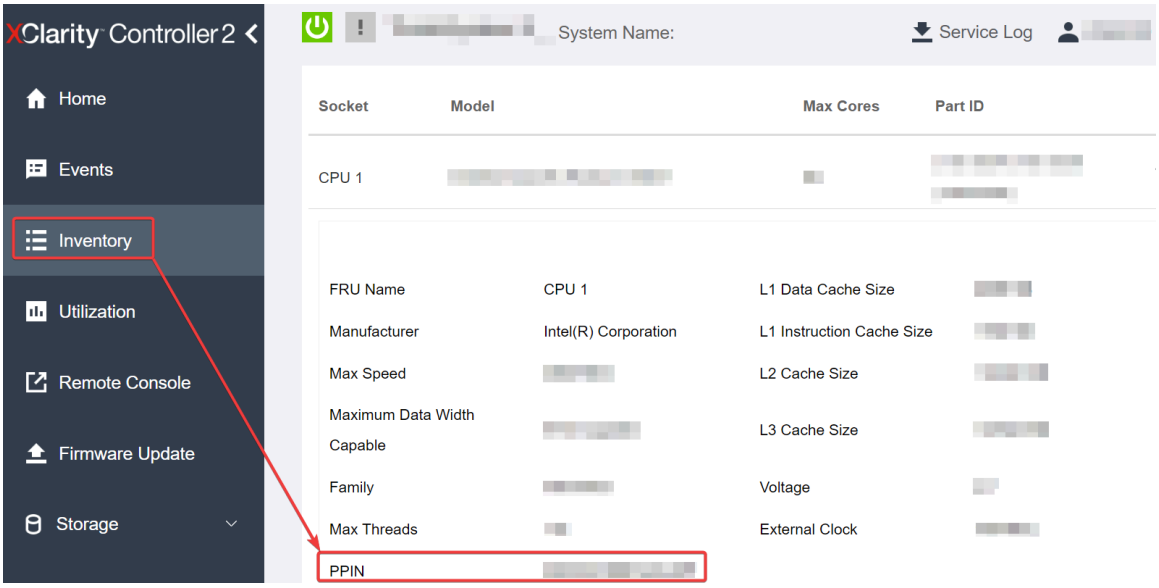

Figure 141. Reading PPIN via XCC Web GUI

Reading PPIN via XCC REST API

1. Use the **GET** method with the following Request URL:
   `GET https://bmc_ip/redfish/v1/Systems/1/Processors`
   For example:
   `GET https://bmc_ip/redfish/v1/Systems/1/Processors`
2. In the response JSON object, the `Members` field shows reference link to an element of processor resource.

   For example:
   ```
   "Members":[
   {
   @odata.id: "/redfish/v1/Systems/1/Processors/1"
   },
   {
   @odata.id: "/redfish/v1/Systems/1/Processors/2"
   }
   ],
   ```
3. Select the processor you need to read the PPIN from. Use the **GET** method with the following Request URL, where `x` is the CPU numbering:
   `GET https://bmc_ip/redfish/v1/Systems/1/Processors/x`
   For example, to read Processor 1 PPIN, see the following:
   `GET https://bmc_ip/redfish/v1/Systems/1/Processors/1`
4. In the response JSON object, the `ProcessorId` field shows the `ProtectedIdentificationNumber` field, which is the PPIN info of the requested CPU.

   For example:
   ```
   "ProcessorId":{
     "ProtectedIdentificationNumber":"1234567890xxxyyy"
   },
   ```

Reading PPIN via LXCE OneCLI

Input the following command:

```
OneCli.exe fod showppin -b XCC_USER:XCC_PASSWORD@XCC_HOST
```

The output shows PPIN information. For example:

```
Machine Type: 7D75
Serail Number: 7D75012345
FoD PPIN result:
=====================================
|   Socket ID   |        PPIN        |
|  Processor 1  |  1234567890xxxyyy  |
|  Processor 2  |  9876543210zzzyyy  |
=====================================
```

Installing Intel On Demand to processor

Install Intel On Demand features to the processor with the Activation Key downloaded from the https://fod.lenovo.com/lkms via XCC Web GUI, XCC REST API or LXCE OneCLI.

Use XCC Web GUI to install Intel On Demand

1. Open XCC Web GUI, go to **BMC Configuration → License → On Demand Capabilities for Intel CPU → Upgrade License → Browse → Import** to upload the Activation Key

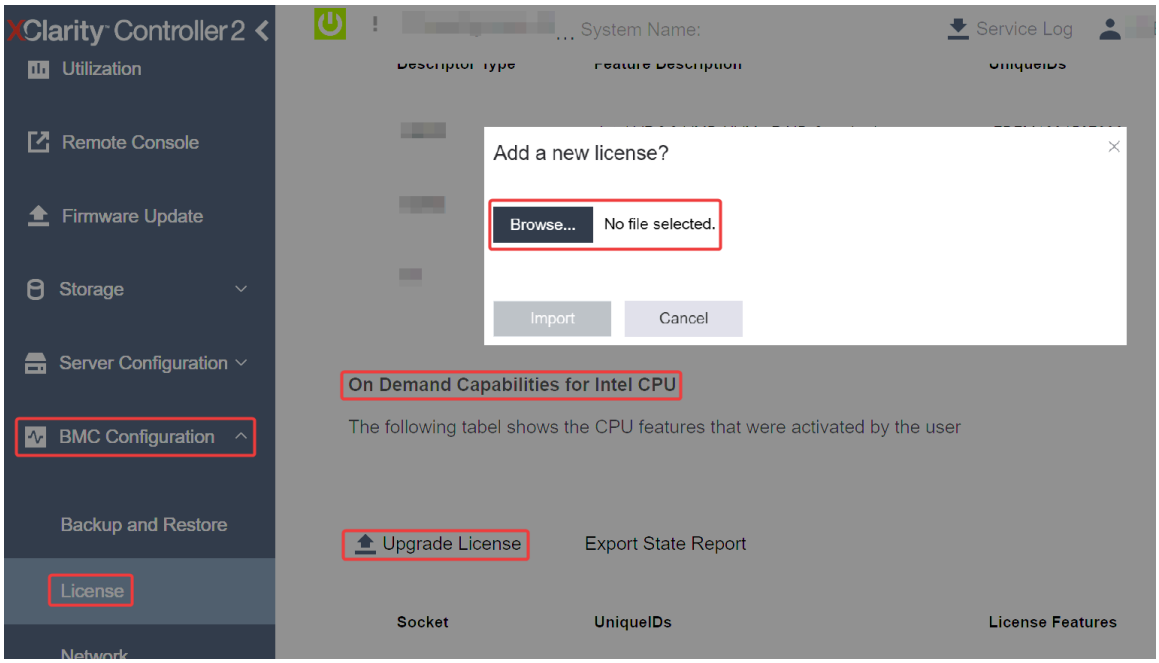

Figure 142. Uploading Activation Key via XCC Web GUI

2. If the installation is successful, the Web GUI will show a pop-up window with the message "`License key upgraded successfully. The features will be activated on the processor after system power cycle`".

   Otherwise, see "Enable Intel® On Demand Troubleshooting" on page 206.

Use XCC REST API to install Intel On Demand

1. Use the **POST** method with the following Request URL:
   ```
   POST https://bmc_ip/redfish/v1/LicenseService/Licenses
   ```
2. Transfer Activation Key to base64 string at first and fill it into the LicenseString field as POST data.
   ```
   {
       "LicenseString": ""
   }
   ```

3. If the installation is successful, XCC REST API show the message "`License key upgraded successfully. The features will be activated on the processor after system power cycle`".

   Otherwise, see "Enable Intel® On Demand Troubleshooting" on page 206.

Use LXCE OneCLI to install Intel On Demand

Input the following command, where `<key_file>` specifies the Activation Key:
```
OneCli.exe fod install --keyfile <key_file>
```

If successfully installed, the response will show:
```
Successfully install key
```

Call Lenovo support if the response shows the following:
```
Failed to install key
```

Acquiring and uploading Intel On Demand State Report

After completing enabling or transferring Intel On Demand, acquire and upload the State Report via XCC Web GUI, XCC REST API, and LXCE OneCLI. See the following for more information.

Use XCC Web GUI to upload State Report

1. Open XCC Web GUI, go to **BMC Configuration → License → On Demand Capabilities for Intel CPU → Choose CPU → Export State Report**

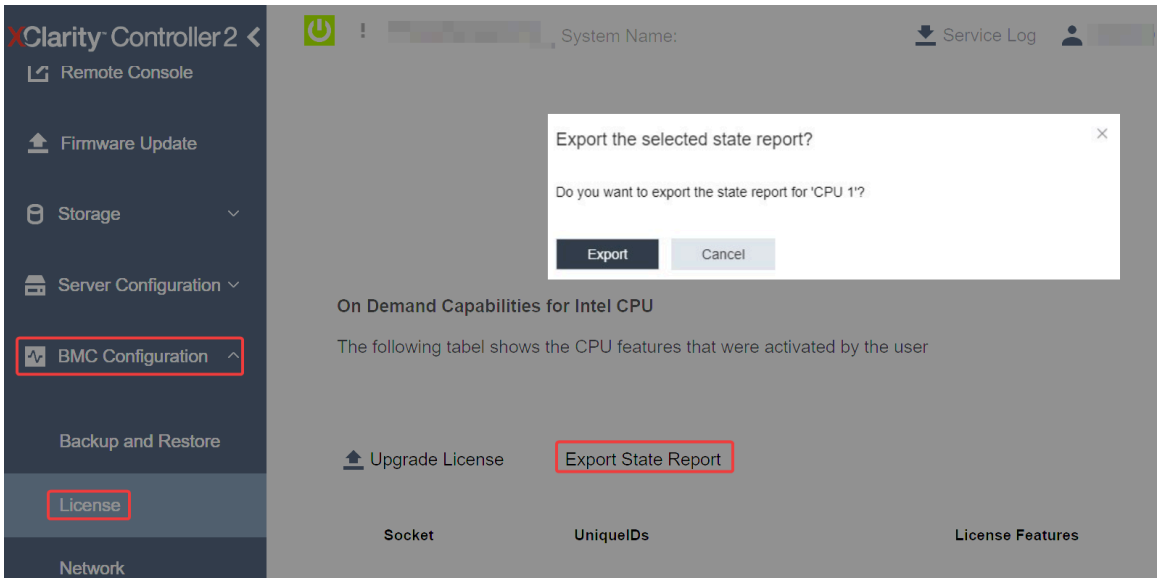

Figure 143. Export State Report via XCC Web GUI

2. Upload State Report via "On Demand Feedback" section in https://fod.lenovo.com/lkms.

Use XCC REST API to upload State Report

1. Use the **GET** method with the following Request URL to retrieve CPU State Report API, where `X` is the CPU numbering:
   `GET https://bmc_ip/redfish/v1/LicenseService/Licenses/CPUX_OnDemandCapability`
   For example, to retrieve CPU 1 State Report API, see the following:
   `GET https://bmc_ip/redfish/v1/LicenseService/Licenses/CPU1_OnDemandCapability`
2. In the response JSON object, the response of the `target` field of the `LenovoLicense.ExportStateReport` field is the CPU State Report API, where `X` is the CPU numbering:

```
"Actions": {
    "Oem": {
        "#LenovoLicense.ExportStateReport": {
            "title": "ExportStateReport",
            "target": "/redfish/v1/LicenseService/Licenses/CPUX_OnDemandCapability/Actions/Oem/LenovoLicense.ExportStateReport"
        }
    }
},
```

In the following example, the response of the `target` field is the CPU 1 State Report API. Copy the CPU 1 State Report API.

```
"Actions": {
    "Oem": {
        "#LenovoLicense.ExportStateReport": {
            "title": "ExportStateReport",
            "target": "/redfish/v1/LicenseService/Licenses/CPU1_OnDemandCapability/Actions/Oem/LenovoLicense.ExportStateReport"
        }
    }
},
```

3. Retrieve the State Report.
   a. Use the **POST** method with the following Request URL with CPU State Report API to retrieve the State Report, where `X` is the CPU numbering:
   `POST https://bmc_ip/redfish/v1/LicenseService/Licenses/CPUX_OnDemandCapability/Actions/Oem/LenovoLicense.ExportStateReport`
   For example, to retrieve CPU 1 State Report, see the following:
   `POST https://bmc_ip/redfish/v1/LicenseService/Licenses/CPU1_OnDemandCapability/Actions/Oem/LenovoLicense.ExportStateReport`
   b. Use an empty JSON object as POST data. When using API tool such as Postman, fill an empty JSON object in **Body → Raw → JSON**, fill a NULL object '{}' in a JSON file.

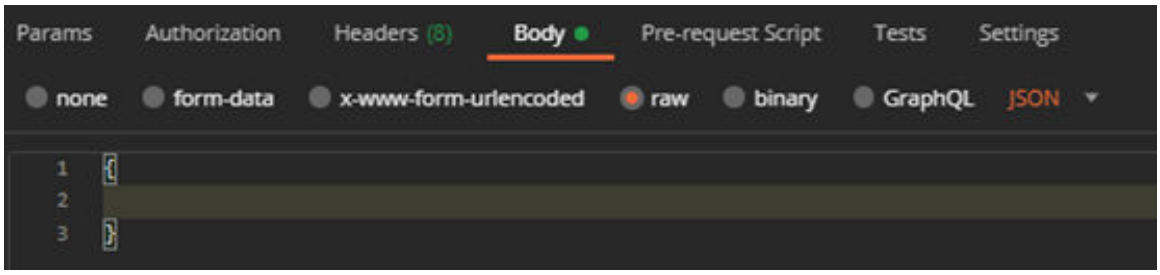

4. In the response, retrieve the State Report in the `stateReports` field.

```
{
    "stateReports": [
        {
            "syntaxVersion": "1.0",
            "timestamp": "",
            "objectId": "",
            "hardwareComponentData": [
                {
                    "hardwareId": {
                        "type": "PPIN",
                        "value": ""
                    },
                    "stateCertificate": {
                        "pendingCapabilityActivationPayloadCount": ,
                        "value": ""
                    },
                    "hardwareType": "CPU"
                }
            ]
```

```
        }
    ]
}
```

5. Upload State Report via “On Demand Feedback” section in https://fod.lenovo.com/lkms.

Use LXCE OneCLI to upload State Report

1. Acquire State Report with the following command:
   `OneCli.exe fod exportreport -b XCC_USER:XCC_PASSWORD@XCC_HOST`
2. Upload State Report with the following command:
   `OneCli.exe fod uploadreport --file CPU1_xxxxxx_StateReport.json --kmsid KMS_USER:KMS_PASSWORD`
   Where:

   `CPU1_xxxxxx_StateReport.json` is the file name downloaded from the **fod exportreport** command in Step 1.

   `KMS_USER` and `KMS_PASSWORD` are your ID and password on the https://fod.lenovo.com/lkms.

Checking the Intel On Demand features installed in a processor

You can check the Intel On Demand features installed in a processor via XCC Web GUI, XCC REST API, and LXCE OneCLI. See the following for more information.

Note: If the processor has not been installed with any license, it would not appear in the **On Demand Capabilities for Intel CPU** section in XCC Web GUI.

Use XCC Web GUI to check the Intel On Demand features installed in a processor

Go to **BMC Configuration → License → On Demand Capabilities for Intel CPU → Choose CPU → License Features**, where the installed features are listed.

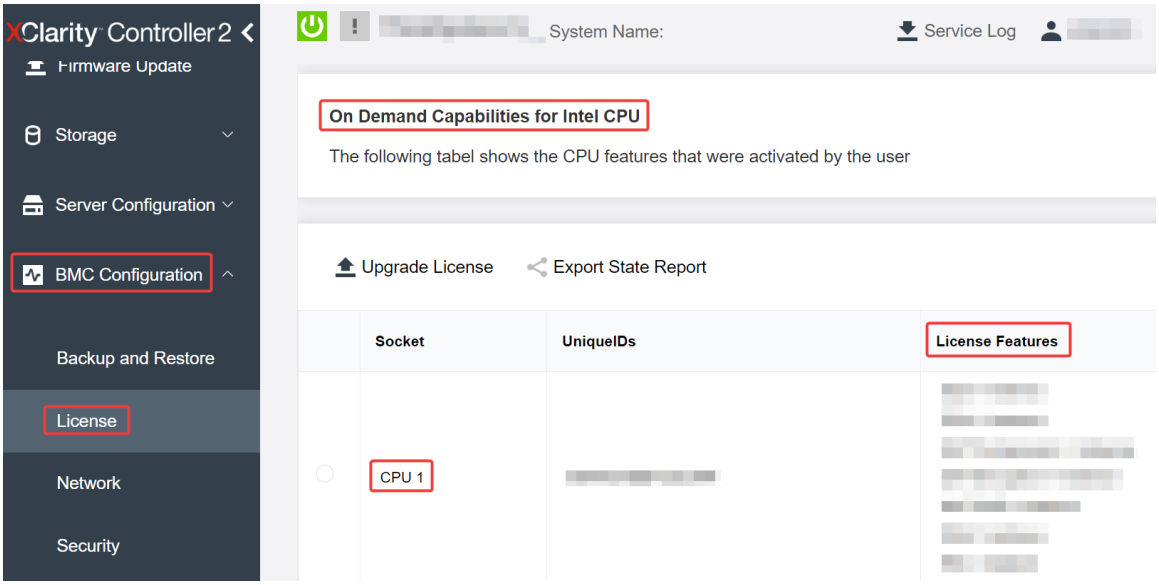

Figure 144. Checking the Intel On Demand features installed in a processor in XCC Web GUI

Use XCC REST API to check the Intel On Demand features installed in a processor

1. Use the **GET** method with the following Request URL to retrieve Intel On Demand features installed on CPU X, where `X` is the CPU numbering:
   `GET https://bmc_ip/redfish/v1/LicenseService/Licenses/CPUX_OnDemandCapability`
   For example, to retrieve Intel On Demand features installed on CPU 1, see the following:

```
GET https://bmc_ip/redfish/v1/LicenseService/Licenses/CPU1_OnDemandCapability
```

2. In the response JSON object, the `FeatureList` field contains the Intel On Demand features installed in this processor.

```
"Oem": {
 "Lenovo":{
    "FeatureList":[]
    "@odata.type":""
 }
},
```

Use LXCE OneCLI to check the Intel On Demand features installed in a processor

1. Check installed features with the following command:
   `OneCli.exe fod report -b XCC_USER:XCC_PASSWORD@XCC_HOST`
2. The output shows all license, including Intel On Demand features. For example:

```
                                    FoD Reports result:
==============================================================================================
| Feature | Key                    | Status         | Description                 | User      | Expired |
| Type    | ID                     |                | Feature List                | Reminding | Date    |
|----------------------------------------------------------------------------------------------
| N/A     | CPU1_OnDemandCapability | StandbyOffline | DSA 4 instances,            | N/A       | N/A     |
|         |                        |                | IAA 4 instances             |           |         |
----------------------------------------------------------------------------------------------
| N/A     | CPU2_OnDemandCapability | Enabled        | DSA 4 instances,            | N/A       | N/A     |
|         |                        |                | IAA 4 instances             |           |         |
----------------------------------------------------------------------------------------------
| 004a    | XCC2_Platinum          | Enabled        | Lenovo XClarity Controller 2 | N/A       | N/A     |
|         |                        |                | Platinum Upgrade            |           |         |
==============================================================================================
Succeed.
```

Intel On Demand Features

Intel On Demand features are listed below. Supported features vary by product, for more information, see https://lenovopress.lenovo.com/lp1853-thinksystem-sd530-v3-server.

Features

- **Intel Quick Assist Technology (Intel QAT)**[1]

  Intel® QAT which helps free up processor cores by offloading encryption, decryption, and compression so systems can serve a larger number of clients or use less power. With Intel QAT, 4th gen Intel Xeon Scalable processors are the highest performance CPUs that can compress and encrypt in a single data flow.

- **Intel Dynamic Load Balancer (Intel DLB)**[2]

  Intel DLB is a hardware managed system of queues and arbiters connecting producers and consumers. It is a PCI device envisaged to live in the server CPU uncore and can interact with software running on cores, and potentially with other devices.

- **Intel Data Streaming Accelerator (Intel DSA)**[1]

  Intel DSA drives high performance for storage, networking, and data-intensive workloads by improving streaming data movement and transformation operations. Designed to offload the most common data movement tasks that cause overhead in data center-scale deployments, Intel DSA helps speed up data movement across the CPU, memory, caches, all attached memory, storage, and network devices.

- **Intel In Memory Accelerator (Intel IAA)**[1]

Intel IAA helps run database and analytics workloads faster, with potentially greater power efficiency. This built-in accelerator increases query throughput and decreases the memory footprint for in-memory database and big data analytics workloads. Intel IAA is ideal for in-memory databases, and source databases.

- **Intel Software Guard Extensions (Intel SGX) 512 GB**[3]

  Intel® SGX offers hardware-based memory encryption that isolates specific application code and data in memory. Intel SGX allows user-level code to allocate private regions of memory, called enclaves, which are designed to be protected from processes running at higher privilege levels.

References
- [1]*Achieve Performance Advantage with Intel oneAPI, AI Tools, and 4th Gen Intel® Xeon® Scalable Processors Featuring Built-in Accelerator Engines*, (n.d.). Intel. https://www.intel.com/content/www/us/en/developer/articles/technical/performance-advantage-with-xeon-and-oneapi-tools.html
- [2]*Intel® Dynamic Load Balancer*, (2023, May 23) Intel. https://www.intel.com/content/www/us/en/download/686372/intel-dynamic-load-balancer.html
- [3]*Intel® Software Guard Extensions (Intel® SGX)*, (n.d.) Intel. https://www.intel.com/content/www/us/en/architecture-and-technology/software-guard-extensions.html

Enable Intel® On Demand Troubleshooting

Refer to the table below for Intel On Demand installation error messages and user actions.

Table 28. Intel On Demand installation messages and user actions

Message	User Action
License key upgraded successfully. The features will be activated on the processor after system power cycle.	You can activate Intel On Demand after performing one system power cycle.
The activation key format is invalid	Check if you have uploaded the correct Activation Key file. If the error persists, contact Lenovo support.
Invalid processor PPIN in Activation key	Contact Lenovo support.
The license was installed in the processor already	You have already installed this activation key. Check if the activation key you uploaded is correct.
Not enough NMRAM space in the processor	Contact Lenovo support.
Internal error	Contact Lenovo support.
Cold reset needed before next provisioning	If you want to continue installing an activation key, perform a system power cycle at first.
Unable to provision LAC due to FEH error	Contact Lenovo support.
Unable to import license in shutdown state, please try again after power on.	Power on the system before installing Intel On Demand.
Unable to import license due to On Demand Capabilities information is in progress. Please try again later.	If you want to continue installing an activation key, try again later.

Chapter 8. Problem determination

Use the information in this section to isolate and resolve issues that you might encounter while using your server.

Lenovo servers can be configured to automatically notify Lenovo Support if certain events are generated. You can configure automatic notification, also known as Call Home, from management applications, such as the Lenovo XClarity Administrator. If you configure automatic problem notification, Lenovo Support is automatically alerted whenever a server encounters a potentially significant event.

To isolate a problem, you should typically begin with the event log of the application that is managing the server:

- If you are managing the server from the Lenovo XClarity Administrator, begin with the Lenovo XClarity Administrator event log.
- If you are using some other management application, begin with the Lenovo XClarity Controller event log.

Web resources

- **Tech tips**

  Lenovo continually updates the support website with the latest tips and techniques that you can use to solve issues that your server might encounter. These Tech Tips (also called retain tips or service bulletins) provide procedures to work around issues or solve problems related to the operation of your server.

  To find the Tech Tips available for your server:

  1. Go to http://datacentersupport.lenovo.com and navigate to the support page for your server.
  2. Click on **How To's** from the navigation pane.
  3. Click **Article Type → Solution** from the drop-down menu.

     Follow the on-screen instructions to choose the category for the problem that you are having.

- **Lenovo Data Center Forum**
  - Check https://forums.lenovo.com/t5/Datacenter-Systems/ct-p/sv_eg to see if someone else has encountered a similar problem.

Event logs

An *alert* is a message or other indication that signals an event or an impending event. Alerts are generated by the Lenovo XClarity Controller or by UEFI in the servers. These alerts are stored in the Lenovo XClarity Controller Event Log. If the server is managed by the Chassis Management Module 2 or by the Lenovo XClarity Administrator, alerts are automatically forwarded to those management applications.

Note: For a listing of events, including user actions that might need to be performed to recover from an event, see the *Messages and Codes Reference*, which is available at https://pubs.lenovo.com/sd530-v3/pdf_files.

Lenovo XClarity Administrator event log

If you are using Lenovo XClarity Administrator to manage server, network, and storage hardware, you can view the events from all managed devices through the XClarity Administrator.

© Copyright Lenovo 2025

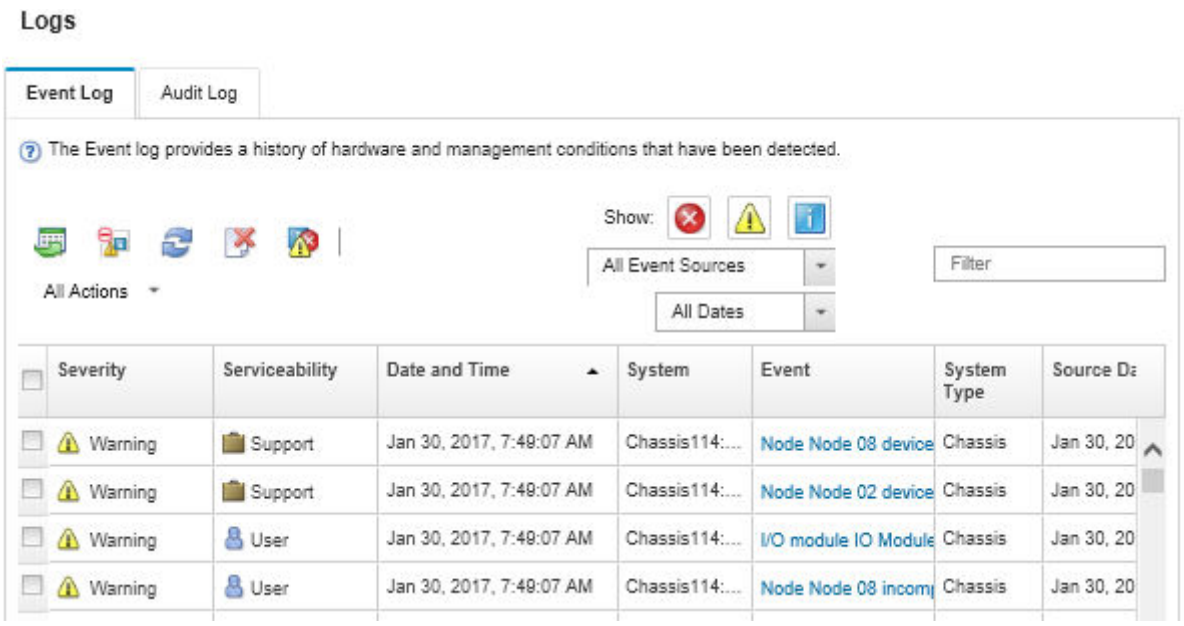

Figure 145. Lenovo XClarity Administrator event log

For more information about working with events from XClarity Administrator, see:

https://pubs.lenovo.com/lxca/events_vieweventlog

Lenovo XClarity Controller event log

The Lenovo XClarity Controller monitors the physical state of the server and its components using sensors that measure internal physical variables such as temperature, power-supply voltages, fan speeds, and component status. The Lenovo XClarity Controller provides various interfaces to systems management software and to system administrators and users to enable remote management and control of a server.

The Lenovo XClarity Controller monitors all components of the server and posts events in the Lenovo XClarity Controller event log.

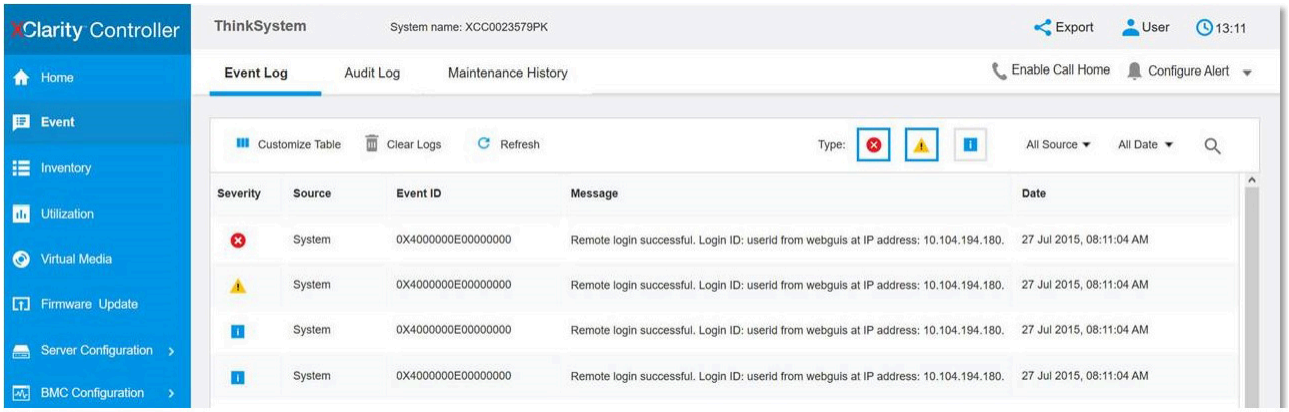

Figure 146. Lenovo XClarity Controller event log

For more information about accessing the Lenovo XClarity Controller event log, see:

“Viewing Event Logs” section in the XCC documentation compatible with your server at https://pubs.lenovo.com/lxcc-overview/

Troubleshooting by system LEDs and diagnostics display

See the following section for information on available system LEDs and diagnostics display.

Drive LEDs

This topic provides information on drive LEDs.

The following table describes the problems that are indicated by drive activity LED and drive status LED.

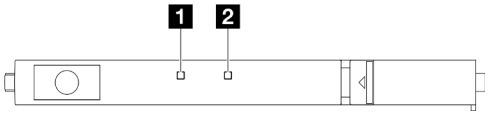

Figure 147. E3.S drive LEDs

LED	Description
1 Drive activity LED (green)	Each hot-swap drive comes with an activity LED. When this LED is flashing, it indicates that the drive is in use.
2 Drive status LED (yellow)	The drive status LED indicates the following status: • The LED is lit: the drive has failed. • The LED is flashing slowly (once per second): the drive is being rebuilt. • The LED is flashing rapidly (three times per second): the drive is being identified.

Front operator panel LEDs

The front operator panel of the node provides controls, connectors, and LEDs.

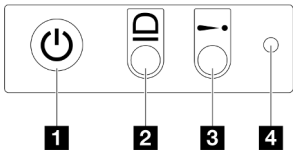

Figure 148. Front operator panel buttons and LEDs

Table 29. Front operator panel buttons and LEDs

1 Power button with power status LED (green)	3 System Error LED (yellow)
2 System ID LED (blue)	4 NMI button

1 Power button with power status LED (green)

You can press the power button to power on the server when you finish setting up the server. You also can hold the power button for several seconds to power off the server if you cannot shut down the server from the operating system. The states of the power LED are as follows:

Status	Color	Description
Off	None	No power supply is properly installed, or the LED itself has failed.
Flashing rapidly (four times per second)	Green	The server is turned off and is not ready to be turned on. The power button is disabled. This will last approximately 5 to 10 seconds.
Flashing slowly (once per second)	Green	The server is turned off and is ready to be turned on. You can press the power button to turn on the server.
Lit	Green	The server is turned on.

2 System ID LED (blue)

Use this system ID LED to visually locate the server. The LED can be changed to on, blinking, or off. You can use the Lenovo XClarity Controller or a remote management program to change the state of the system ID LED to assist in visually locating the server among other servers.

3 System Error LED (yellow)

The system error LED helps you to determine if there are any system errors.

Status	Color	Description	Action
On	Yellow	An error has been detected on the server. Causes might include one or more of the following errors: • The temperature of the server reached the non-critical temperature threshold. • The voltage of the server reached the non-critical voltage threshold. • A fan has been detected to be running at low speed. • The power supply has a critical error. • The power supply is not connected to the power.	Check the Event log to determine the exact cause of the error.
Off	None	The server is off or the server is on and is working correctly.	None.

4 NMI button

Press this button to force a non-maskable interrupt to the processor. A pen or the end of a straightened paper clip might be needed to press this button. This button can also be used to force a blue-screen memory dump (only when you are directed to do so by Lenovo Support).

Power supply LED

This topic provides information about various power supply LED status and corresponding action suggestions.

- The following minimal configuration is required for the node to start:
  - System board
  - Firmware and RoT security module (installed on the system board)
  - One processor in socket 1
  - One memory module in DIMM slot 4
  - One power supply in PSU slot 1

– One boot drive, M.2 or E3.S drive, and RAID adapter if configured (If OS is needed by debugging)
– Four system fans

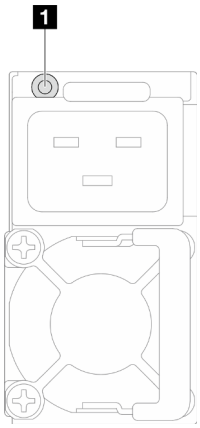

Figure 149. Power supply LED

LED	Description
1 Power supply status	The power supply status LED can be in one of the following states: • **Green:** The power supply is connected to the AC power source and working normally. • **Off:** The power supply is disconnected from the AC power source. • **Slow blinking green (about one flash every second):** The power supply is in PSU standby state with AC present, cold standby state, or always standby state. • **Amber:** The AC power cord is unplugged, AC power lost (with a second power supply in parallel still in AC power input power), or power supply has failed. To resolve the issue, replace the power supply. • **Slow blinking amber (about one flash every second):** Power supply warning events where the power supply continues to operate.

Firmware and RoT security module LEDs

The following illustration shows the light-emitting diodes (LEDs) on the Firmware and RoT security module (ThinkSystem V3 Firmware and Root of Trust Security Module).

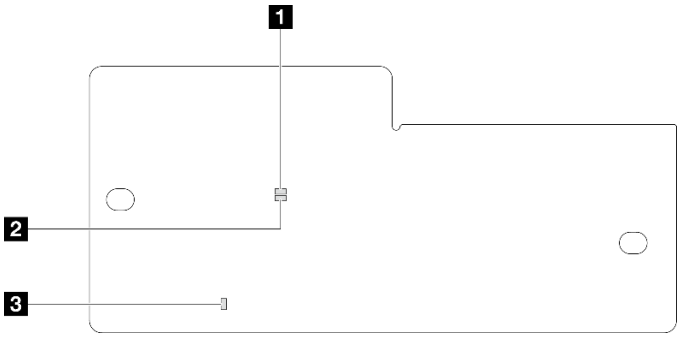

Figure 150. LEDs on the firmware and RoT security module

1 AP0 LED (Green)	2 AP1 LED (Green)	3 Fatal Error LED (Amber)

Table 30. LEDs description

Scenario	AP0 LED	AP1 LED	Fatal Error LED	XCC heart-beat LED[note]	Actions
RoT security module fatal firmware failure	Off	Off	On	N/A	Replace the firmware and RoT security module.
	Blink	N/A	On	N/A	
No system power	Off	Off	Off	Off	If the AC power is on, but the system board does not have power, then: 1. Check the power supply unit (PSU) or chassis midplane. If the PSU or chassis midplane has any error, replace it. 2. If there is no problem with the PSU or chassis midplane, replace the system board.
XCC firmware recoverable error	Blink	N/A	Off	N/A	Information only. No action is required.
XCC firmware is recovered from error	On	N/A	Off	N/A	
UEFI firmware authentication failure	N/A	Blink	Off	N/A	
UEFI firmware is recovered from authentication failure	N/A	On	Off	N/A	
System is OK	On	On	Off	Blink (1 Hz)	

Note: For XCC heartbeat LED location, see "System-board LEDs" on page 212.

System-board LEDs

This section contains information on the light-emitting diodes (LEDs) on the system board.

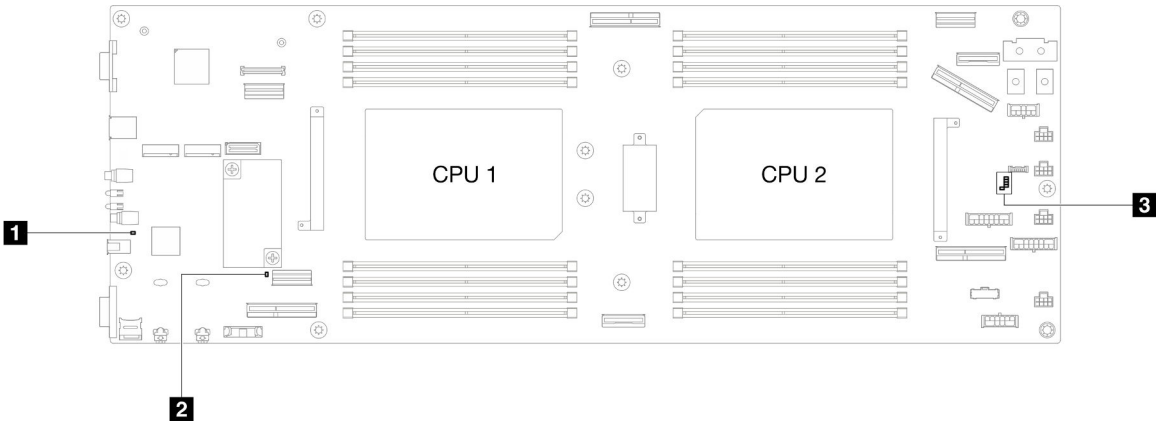

Table 31. System-board LEDs description and actions

- **1 System power LED (yellow)**

  Off: No power supply is properly installed, or the LED itself has failed.

  Flashing rapidly (four times per second): The node is turned off and is not ready to be turned on. The power button is disabled. This will last approximately 5 to 10 seconds.

  Flashing slowly (once per second): The node is turned off and is ready to be turned on. You can press the power button to turn on the node.

  Lit: The node is turned on.

- **2 ME heartbeat LED (green)**

  Blinking: PCH ME is functioning.

  On: PCH ME is malfunctioning.

  Off: PCH ME is malfunctioning.

- **3 XCC heartbeat LED**

  Blinking (1 Hz, about one flash per second): XCC is working normally.

  Blinking at other speeds or always on: XCC is at the initial phase or is working abnormally.

  Off: XCC is not working.

XCC system management port LEDs

This topic provides information on LEDs of XCC system management port (10/100/1000 Mbps RJ-45).

The following table describes the problems that are indicated by LEDs on XCC system management port (10/100/1000 Mbps RJ-45).

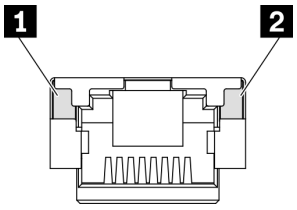

Figure 151. XCC system management port (10/100/1000 Mbps RJ-45) LEDs

LED	Description
1 XCC system management port (10/100/1000 Mbps RJ-45) link LED	Use this green LED to distinguish the network connectivity status: • Off: The network link is disconnected. • Green: The network link is established.
2 XCC system management port (10/100/1000 Mbps RJ-45) activity LED	Use this green LED to distinguish the network activity status: • Off: The server is disconnected from a LAN. • Green (blinking): The network is connected and active.

External Diagnostics Handset

The External Diagnostics Handset is an external device that is connected to the server with a cable, and it allows quick access to system information such as errors, system status, firmware, network, and health information.

Location of the External Diagnostics Handset

Location	Callouts
The External Diagnostics Handset is connected to the server with an external cable. 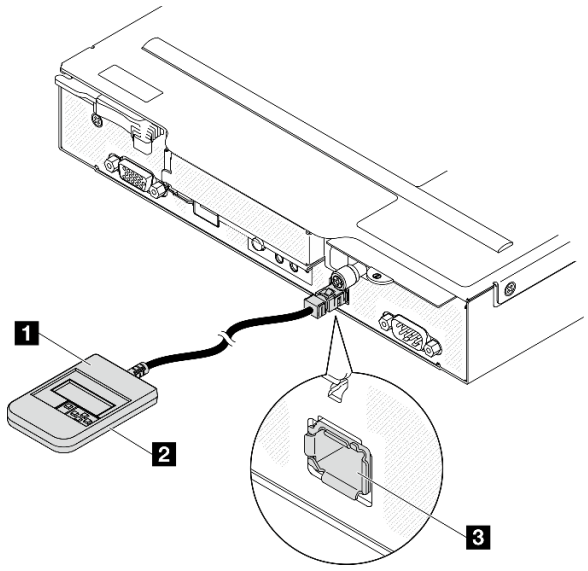 	1 External Diagnostics Handset 2 Magnetic bottom With this component, the diagnostic handset can be attached to the top or side of the rack with hands spared for service tasks. 3 External diagnostics connector This connector is located on the front of the server, and is used to connect an External Diagnostics Handset.

Note: When unplugging the External Diagnostics Handset, see the following instructions:

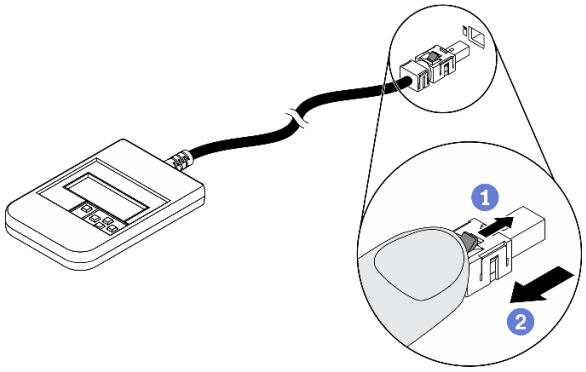

1 Press the plastic clip on the plug forward.

2 Hold the clip and remove the cable from the connector.

Display panel overview

The diagnostics device consists of an LCD display and 5 navigation buttons.

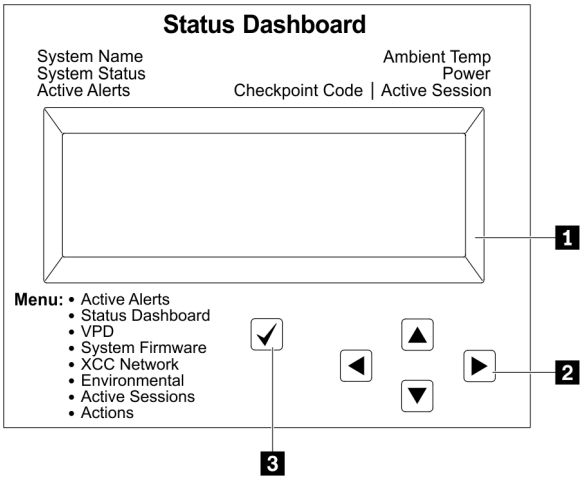

1 LCD display
2 Scroll buttons (up/down/left/right) Press the scroll buttons to locate and select system information.
3 Select button Press the select button to select from the options in the menu.

Option flow diagram

The LCD panel displays various system information. Navigate through the options with the scroll keys.

Depending on the model, the options and entries on the LCD display might be different.

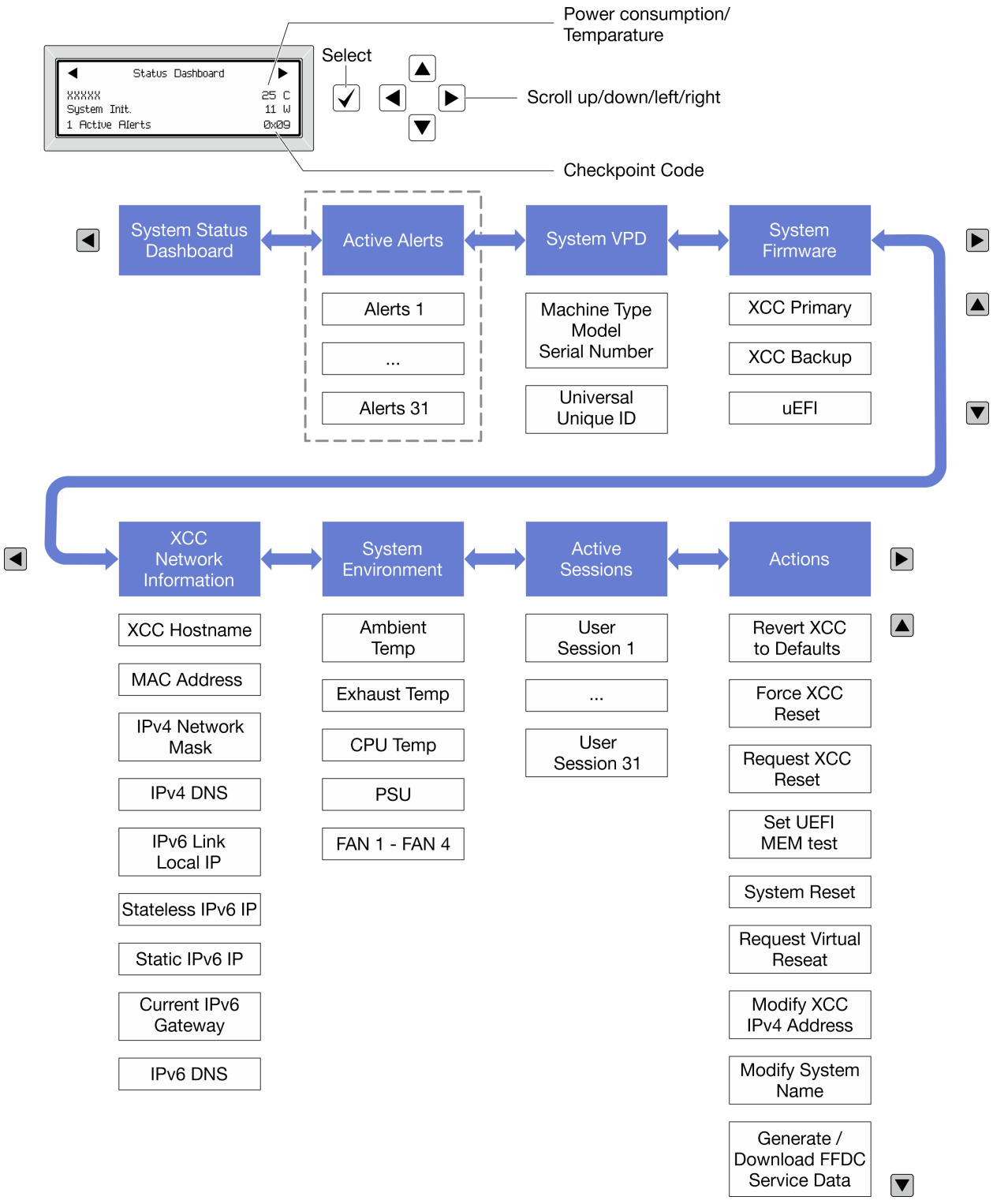

Full menu list

Following is the list of available options. Switch between an option and the subordinate information entries with the select button, and switch among options or information entries with the scroll buttons.

Depending on the model, the options and entries on the LCD display might be different.

Home Menu (System Status Dashboard)

Home Menu	Example
1 System name 2 System status 3 Active alert quantity 4 Temperature 5 Power consumption 6 Checkpoint code	

Active Alerts

Sub Menu	Example
Home screen: Active error quantity **Note:** The “Active Alerts” menu displays only the quantity of active errors. If no errors occur, the “Active Alerts” menu will not be available during navigation.	1 Active Alerts
Details screen: • Error message ID (Type: Error/Warning/Information) • Occurrence time • Possible sources of the error	Active Alerts: 1 Press ▼ to view alert details FQXSPPU009N(Error) 04/07/2020 02:37:39 PM CPU 1 Status: Configuration Error

System VPD Information

Sub Menu	Example
• Machine type and serial number • Universal Unique ID (UUID)	Machine Type: xxxx Serial Num: xxxxxx Universal Unique ID: xxxxxxxxxxxxxxxxxxxxxxxxxxxx

System Firmware

Sub Menu	Example
XCC Primary • Firmware level (status) • Build ID • Version number • Release date	XCC Primary (Active) Build: DVI399T Version: 4.07 Date: 2020-04-07
XCC Backup • Firmware level (status) • Build ID • Version number • Release date	XCC Backup (Active) Build: D8BT05I Version: 1.00 Date: 2019-12-30
UEFI • Firmware level (status) • Build ID • Version number • Release date	UEFI (Inactive) Build: D0E101P Version: 1.00 Date: 2019-12-26

XCC Network Information

Sub Menu	Example
• XCC hostname • MAC address • IPv4 Network Mask • IPv4 DNS • IPv6 Link Local IP • Stateless IPv6 IP • Static IPv6 IP • Current IPv6 Gateway • IPv6 DNS **Note:** Only the MAC address that is currently in use is displayed (extension or shared).	XCC Network Information XCC Hostname: XCC-xxxx-SN MAC Address: xx:xx:xx:xx:xx:xx IPv4 IP: xx.xx.xx.xx IPv4 Network Mask: x.x.x.x IPv4 Default Gateway: x.x.x.x

System Environmental Information

Sub Menu	Example
• Ambient temperature • Exhaust temperature • CPU temperature • PSU status • Spinning speed of fans by RPM	Ambient Temp: 24 C Exhaust Temp: 30 C CPU1 Temp: 50 C PSU1: Vin= 213 w Inlet= 26 C FAN1 Front: 21000 RPM FAN2 Front: 21000 RPM FAN3 Front: 21000 RPM FAN4 Front: 21000 RPM

Active Sessions

Sub Menu	Example
Quantity of active sessions	Active User Sessions: 1

Actions

Sub Menu	Example
Several quick actions are available: • Revert XCC to Defaults • Force XCC Reset • Request XCC Reset • Set UEFI Memory Test • Request Virtual Reseat • Modify XCC Static IPv4 Address/Net mask/Gateway • Modify System Name • Generate/Download FFDC Service Data	Request XCC Reset? This will request the BMC to reboot itself. Hold √ for 3 seconds

General problem determination procedures

Use the information in this section to resolve problems if the event log does not contain specific errors or the system is inoperative.

If you are not sure about the cause of a problem and the power supplies are working correctly, complete the following steps to attempt to resolve the problem:

1. Power off the system.
2. Make sure that the system is cabled correctly.
3. Remove or disconnect the following devices if applicable, one at a time, until you find the failure. Power on and configure the system each time you remove or disconnect a device.
   - Any external devices.
   - Surge-suppressor device (on the system).
   - Printer, mouse, and non-Lenovo devices.
   - Each adapter.

- Hard disk drives.
- Memory modules until you reach the minimum configuration that is supported for the system.

Note: To determine the minimal configuration for your system, see “Minimal configuration for debugging” in “Node technical specifications” on page 9.

4. Power on the system.

If the problem is solved when you remove an adapter from the node, but the problem recurs when you install the same adapter again, suspect the adapter. If the problem recurs when you replace the adapter with a different one, try a different PCIe slot.

If the problem appears to be a networking problem and the compute node passes all system tests, suspect a network cabling problem that is external to the node.

Resolving suspected power problems

Power problems can be difficult to solve. For example, a short circuit can exist anywhere on any of the power distribution buses. Usually, a short circuit will cause the power subsystem to shut down because of an overcurrent condition.

Complete the following steps to diagnose and resolve a suspected power problem.

Step 1. Check the event log and resolve any errors related to the power.

Note: Start with the event log of the application that is managing the server. For more information about event logs, see “Event logs” on page 207.

Step 2. Check for short circuits, for example, if a loose screw is causing a short circuit on a circuit board.

Step 3. Remove the adapters and disconnect the cables and power cords to all internal and external devices until the server is at the minimal configuration for debugging that is required for the server to start. To determine the minimal configuration for your server, see “Minimal configuration for debugging” in “Node technical specifications” on page 5.

Step 4. Reconnect all AC power cords and turn on the server. If the server starts successfully, reseat the adapters and devices one at a time until the problem is isolated.

If the server does not start from the minimal configuration, replace the components in the minimal configuration one at a time until the problem is isolated.

Resolving suspected Ethernet controller problems

The method that you use to test the Ethernet controller depends on which operating system you are using. See the operating-system documentation for information about Ethernet controllers, and see the Ethernet controller device-driver readme file.

Complete the following steps to attempt to resolve suspected problems with the Ethernet controller.

Step 1. Make sure that the correct device drivers, which come with the server are installed and that they are at the latest level.

Step 2. Make sure that the Ethernet cable is installed correctly.

- The cable must be securely attached at all connections. If the cable is attached but the problem remains, try a different cable.
- Make sure that the cable rating is applicable for the network speed selected. For example, an SFP+ cable is only suitable for 10G operation. An SFP25 cable is needed for 25G operation. Likewise for Base-T operation, a CAT5 cable is required for 1G Base-T operation while a CAT6 cable is required for 10G Base-T operation.

Step 3. Set both the adapter port and the switch port to auto-negotiation. If auto-negotiation is not supported on one of the ports, try configuring both ports manually to match each other.

Step 4. Check the Ethernet controller LEDs on the server. These LEDs indicate whether there is a problem with the connector, cable, or hub.

Although some adapters may vary, when installed vertically the adapter link LED is typically on the left of the port and the activity LED is typically on the right.

Ethernet controller LED locations are specified in "Troubleshooting by system LEDs and diagnostics display" on page 209.

- The Ethernet link status LED is lit when the Ethernet controller receives a link indication from the switch. If the LED is off, there might be a defective connector or cable or a problem with the switch.
- The Ethernet transmit/receive activity LED is lit when the Ethernet controller sends or receives data over the Ethernet network. If the Ethernet transmit/receive activity is off, make sure that the hub and network are operating and that the correct device drivers are installed.

Step 5. Check the Network activity LED on the server. The Network activity LED is lit when data is active on the Ethernet network. If the Network activity LED is off, make sure that the hub and network are operating and that the correct device drivers are installed.

Network activity LED location is specified in "Troubleshooting by system LEDs and diagnostics display" on page 209.

Step 6. Check for operating-system-specific causes of the problem, and also make sure that the operating system drivers are installed correctly.

Step 7. Make sure that the device drivers on the client and server are using the same protocol.

If the Ethernet controller still cannot connect to the network but the hardware appears to be working, the network administrator must investigate other possible causes of the error.

Troubleshooting by symptom

Use this information to find solutions to problems that have identifiable symptoms.

To use the symptom-based troubleshooting information in this section, complete the following steps:

1. Check the event log of the application that is managing the server and follow the suggested actions to resolve any event codes.
   - If you are managing the server from the Lenovo XClarity Administrator, begin with the Lenovo XClarity Administrator event log.
   - If you are using some other management application, begin with the Lenovo XClarity Controller event log.

   For more information about event logs (see "Event logs" on page 207).
2. Review this section to find the symptoms that you are experiencing and follow the suggested actions to resolve the issue.
3. If the problem persists, contact support (see "Contacting Support" on page 239).

Intermittent problems

Use this information to solve intermittent problems.

- "Intermittent external device problems" on page 222

- “Intermittent unexpected reboots” on page 222

Intermittent external device problems

Complete the following steps until the problem is solved.

1. Update the UEFI and XCC firmware to the latest versions.
2. Make sure that the correct device drivers are installed. See the manufacturer's website for documentation.
3. For a USB device:
   a. Make sure that the device is configured correctly.

      Restart the server and press the key according to the on-screen instructions to display the LXPM system setup interface. (For more information, see the “Startup” section in the LXPM documentation compatible with your server at https://pubs.lenovo.com/lxpm-overview/.) Then, click **System Settings → Devices and I/O Ports → USB Configuration**.

   b. Connect the device to another port. If using a USB hub, remove the hub and connect the device directly to the compute node. Make sure that the device is configured correctly for the port.

Intermittent unexpected reboots

Note: Some uncorrectable errors require that the server reboot so that it can disable a device, such as a memory DIMM or a processor to allow the machine to boot up properly.

1. If the reset occurs during POST and the POST watchdog timer is enabled, make sure that sufficient time is allowed in the watchdog timeout value (POST Watchdog Timer).

   To check the POST watchdog time, restart the server and press the key according to the on-screen instructions to display the LXPM system setup interface. (For more information, see the “Startup” section in the LXPM documentation compatible with your server at https://pubs.lenovo.com/lxpm-overview/.) Then, click **BMC Settings → POST Watchdog Timer**.
2. If the reset occurs after the operating system starts, enter the operating system when the system operates normally and set up operating system kernel dump process (Windows and Linux base operating systems will be using different method). Enter the UEFI setup menus and disable the feature, or disable it with the following OneCli command.
   `OneCli.exe config set SystemRecovery.RebootSystemOnNMI Disable --bmc`*xcc_userid* `PASSWORD@`*xcc_ipaddress*
3. See the management controller event log to check for an event code that indicates a reboot. See “Event logs” on page 207 for information about viewing the event log. If you are using Linux base operating system, then capture all logs back to Lenovo support for further investigation.

Keyboard, mouse, or USB-device problems

Use this information to solve problems related to a keyboard, mouse, KVM switch or USB-device problems.

- “All or some keys on the keyboard do not work” on page 222
- “Mouse does not work” on page 223
- “USB-device does not work” on page 223

All or some keys on the keyboard do not work

1. Make sure that:
   - The keyboard cable is securely connected.
   - The server and the monitor are turned on.
2. If you are using a USB keyboard, run the Setup utility and enable keyboardless operation.
3. If you are using a USB keyboard and it is connected to a USB hub, disconnect the keyboard from the hub and connect it directly to the server.

4. Try to install the USB keyboard into a different USB port as available.
5. Replace the keyboard.

Mouse does not work

1. Make sure that:
   - The mouse cable is securely connected to the server.
   - The mouse device drivers are installed correctly.
   - The server and the monitor are turned on.
   - The mouse option is enabled in the Setup utility.
2. If you are using a USB mouse and it is connected to a USB hub, disconnect the mouse from the hub and connect it directly to the server.
3. Try to install the USB mouse into a different USB port as available.
4. Replace the mouse.

USB-device does not work

1. Make sure that:
   - The correct USB device driver is installed.
   - The operating system supports USB devices.
2. Make sure that the USB configuration options are set correctly in system setup.

   Restart the server and press the key according to the on-screen instructions to display the LXPM system setup interface. (For more information, see the “Startup” section in the LXPM documentation compatible with your server at https://pubs.lenovo.com/lxpm-overview/.) Then, click **System Settings → Devices and I/O Ports → USB Configuration**.
3. If you are using a USB hub, disconnect the USB device from the hub and connect it directly to the server.

Memory problems

See this section to resolve issues related to memory.

Common memory problems

- “Multiple memory modules in a channel identified as failing” on page 223
- “Displayed system memory is less than installed physical memory” on page 224
- “Invalid memory population detected” on page 224

Multiple memory modules in a channel identified as failing

Note: Each time you install or remove a memory module, you must disconnect the server from the power source; then, wait 10 seconds before restarting the server.

Complete the following procedure to solve the problem.

1. Reseat the memory modules; then, restart the server.
2. Remove the highest-numbered memory module of those that are identified and replace it with an identical known good memory module; then, restart the server. Repeat as necessary. If the failures continue after all identified memory modules are replaced, go to step 4.
3. Return the removed memory modules, one at a time, to their original connectors, restarting the server after each memory module, until a memory module fails. Replace each failing memory module with an identical known good memory module, restarting the server after each memory module replacement. Repeat step 3 until you have tested all removed memory modules.

4. Replace the highest-numbered memory module of those identified; then, restart the server. Repeat as necessary.
5. Reverse the memory modules between the channels (of the same processor), and then restart the server. If the problem is related to a memory module, replace the failing memory module.
6. (Trained technician only) Install the failing memory module into a memory module connector for processor 2 (if installed) to verify that the problem is not the processor or the memory module connector.
7. (Trained technician only) Replace the system board (system board assembly).

Displayed system memory is less than installed physical memory

Complete the following procedure to solve the problem.

Note: Each time you install or remove a memory module, you must disconnect the server from the power source; then, wait 10 seconds before restarting the server.

1. Make sure that:
   - No error LEDs are lit. See "Troubleshooting by system LEDs and diagnostics display" on page 209.
   - Memory mirrored channel does not account for the discrepancy.
   - The memory modules are seated correctly.
   - You have installed the correct type of memory module (see "Memory module installation rules and order" on page 42 for requirements).
   - After changing or replacing a memory module, memory configuration is updated accordingly in the Setup Utility.
   - All banks of memory are enabled. The server might have automatically disabled a memory bank when it detected a problem, or a memory bank might have been manually disabled.
   - There is no memory mismatch when the server is at the minimum memory configuration.
2. Reseat the memory modules, and then restart the server.
3. Check the POST error log:
   - If a memory module was disabled by a systems-management interrupt (SMI), replace the memory module.
   - If a memory module was disabled by the user or by POST, reseat the memory module; then, run the Setup Utility and enable the memory module.
4. Run memory diagnostics. When you start a system and press the key according to the on-screen instructions, the LXPM interface is displayed by default. (For more information, see the "Startup" section in the LXPM documentation compatible with your server at https://pubs.lenovo.com/lxpm-overview/.) You can perform memory diagnostics with this interface. From the Diagnostic page, go to **Run Diagnostic → Memory test → Advanced Memory Test**.
5. Reverse the modules between the channels (of the same processor), and then restart the server. If the problem is related to a memory module, replace the failing memory module.
6. Re-enable all memory modules using the Setup Utility, and then restart the server.
7. (Trained technician only) Install the failing memory module into a memory module connector for processor 2 (if installed) to verify that the problem is not the processor or the memory module connector.
8. (Trained technician only) Replace the system board (system board assembly).

Invalid memory population detected

If this warning message appears, complete the following steps:

```
Invalid memory population (unsupported DIMM population) detected. Please verify memory configuration is valid.
```

1. See “Memory module installation rules and order” on page 42 to make sure the present memory module population sequence is supported.
2. If the present sequence is indeed supported, see if any of the modules is displayed as “disabled” in Setup Utility.
3. Reseat the module that is displayed as “disabled,” and reboot the system.
4. If the problem persists, replace the memory module.

Extra namespace appears in an interleaved region

If there are two created namespaces in one interleaved region, VMware ESXi ignores the created namespaces and creates an extra new namespace during system booting. Delete the created namespaces in either the Setup Utility or the operating system before the first booting with ESXi.

Monitor and video problems

Use this information to solve problems related to a monitor or video.

- “Screen is blank” on page 225
- “Screen goes blank when you start some application programs” on page 225
- “The monitor has screen jitter, or the screen image is wavy, unreadable, rolling, or distorted” on page 226

Screen is blank

Note: Make sure that the expected boot mode has not been changed from the UEFI to Legacy or vice versa.

1. If the server is attached to a KVM switch, bypass the KVM switch to eliminate it as a possible cause of the problem: connect the monitor cable directly to the correct connector on the rear of the server.
2. The management controller remote presence function is disabled if you install an optional video adapter. To use the management controller remote presence function, remove the optional video adapter.
3. If the server is installed with the graphical adapters while turning on the server, the Lenovo logo is displayed on the screen after approximately 3 minutes. This is normal operation while the system loads.
4. Make sure that:
   - The server is turned on and there is power supplied to the server.
   - The monitor cables are connected correctly.
   - The monitor is turned on and the brightness and contrast controls are adjusted correctly.
5. Make sure that the correct server is controlling the monitor, if applicable.
6. Make sure that corrupted server firmware is not affecting the video; see “Update the firmware” on page 189.
7. Observe the LEDs on the system board (system board assembly); if the codes are changing, go to step 6.
8. Replace the following components one at a time, in the order shown, restarting the server each time:
   a. Monitor
   b. Video adapter (if one is installed)
   c. (Trained technician only) System board (system board assembly)

Screen goes blank when you start some application programs

1. Make sure that:
   - The application program is not setting a display mode that is higher than the capability of the monitor.
   - You installed the necessary device drivers for the application.

The monitor has screen jitter, or the screen image is wavy, unreadable, rolling, or distorted

1. If the monitor self-tests show that the monitor is working correctly, consider the location of the monitor. Magnetic fields around other devices (such as transformers, appliances, fluorescents, and other monitors) can cause screen jitter or wavy, unreadable, rolling, or distorted screen images. If this happens, turn off the monitor.

   Attention: Moving a color monitor while it is turned on might cause screen discoloration.

   Move the device and the monitor at least 305 mm (12 in.) apart, and turn on the monitor.

   Notes:

   a. To prevent diskette drive read/write errors, make sure that the distance between the monitor and any external diskette drive is at least 76 mm (3 in.).

   b. Non-Lenovo monitor cables might cause unpredictable problems.
2. Reseat the monitor cable.
3. Replace the components listed in step 2 one at a time, in the order shown, restarting the server each time:
   a. Monitor cable
   b. Video adapter (if one is installed)
   c. Monitor
   d. (Trained technician only) System board (system board assembly)

Network problems

Use this information to resolve issues related to networking.

- "Cannot wake server using Wake on LAN" on page 226
- "Could not log in using LDAP account with SSL enabled" on page 226

Cannot wake server using Wake on LAN

Complete the following steps until the problem is resolved:

1. If you are using the multi-port network adapter and the server is connected to the network using RJ-45 connector, check the system-error log (see "Event logs" on page 207), make sure:
   a. The room temperature is not too high (see Ambient temperature management).
   b. The air vents are not blocked.
   c. The air baffle is installed securely.
2. Reseat the multi-port network adapter.
3. Turn off the server and disconnect it from the power source; then, wait 10 seconds before restarting the server.
4. If the problem still remains, replace the multi-port network adapter.

Could not log in using LDAP account with SSL enabled

Complete the following steps until the problem is resolved:

1. Make sure that the license key is valid.
2. Generate a new license key and log in again.

Observable problems

Use this information to solve observable problems.

- “Server hangs during the UEFI boot process” on page 227
- “The server immediately displays the POST Event Viewer when it is turned on” on page 227
- “Server is unresponsive (POST is complete and operating system is running)” on page 227
- “Server is unresponsive (POST failed and cannot start System Setup)” on page 228
- “Voltage planar fault is displayed in the event log” on page 228
- “Unusual smell” on page 228
- “Server seems to be running hot” on page 229
- “Cannot enter legacy mode after installing a new adapter” on page 229
- “Cracked parts or cracked chassis” on page 229

Server hangs during the UEFI boot process

If the system hangs during the UEFI boot process with the message `UEFI: DXE INIT` on the display, make sure that Option ROMs were not configured with a setting of **Legacy**. You can remotely view the current settings for Option ROMs by running the following command using the Lenovo XClarity Essentials OneCLI:

```
onecli config show EnableDisableAdapterOptionROMSupport --bmc xcc_userid:xcc_password@xcc_ipaddress
```

To recover a system that hangs during the boot process with Legacy Option ROM settings, see the following Tech Tip:

https://datacentersupport.lenovo.com/solutions/ht506118

If legacy Option ROMs must be used, do not set slot Option ROMs to **Legacy** on the Devices and I/O Ports menu. Instead, set slot Option ROMs to **Auto** (the default setting), and set the System Boot Mode to **Legacy Mode**. Legacy option ROMs will be invoked shortly before the system boots.

The server immediately displays the POST Event Viewer when it is turned on

Complete the following steps until the problem is solved.

1. Correct any errors that are indicated by the system LEDs and diagnostics display.
2. Make sure that the server supports all the processors and that the processors match in speed and cache size.

   You can view processor details from system setup.

   To determine if the processor is supported for the server, see https://serverproven.lenovo.com.
3. (Trained technician only) Make sure that processor 1 is seated correctly.
4. (Trained technician only) Remove processor 2 and restart the server.
5. Replace the following components one at a time, in the order shown, restarting the server each time:
   a. (Trained technician only) Processor
   b. (Trained technician only) System board (system board assembly)

Server is unresponsive (POST is complete and operating system is running)

Complete the following steps until the problem is solved.

- If you are in the same location as the compute node, complete the following steps:
  1. If you are using a KVM connection, make sure that the connection is operating correctly. Otherwise, make sure that the keyboard and mouse are operating correctly.

2. If possible, log in to the compute node and verify that all applications are running (no applications are hung).
3. Restart the compute node.
4. If the problem remains, make sure that any new software has been installed and configured correctly.
5. Contact your place of purchase of the software or your software provider.

- If you are accessing the compute node from a remote location, complete the following steps:
  1. Make sure that all applications are running (no applications are hung).
  2. Attempt to log out of the system and log back in.
  3. Validate the network access by pinging or running a trace route to the compute node from a command line.
     a. If you are unable to get a response during a ping test, attempt to ping another compute node in the enclosure to determine whether it is a connection problem or compute node problem.
     b. Run a trace route to determine where the connection breaks down. Attempt to resolve a connection issue with either the VPN or the point at which the connection breaks down.
  4. Restart the compute node remotely through the management interface.
  5. If the problem remains, verify that any new software has been installed and configured correctly.
  6. Contact your place of purchase of the software or your software provider.

Server is unresponsive (POST failed and cannot start System Setup)

Configuration changes, such as added devices or adapter firmware updates, and firmware or application code problems can cause the server to fail POST (the power-on self-test).

If this occurs, the server responds in either of the following ways:

- The server restarts automatically and attempts POST again.
- The server hangs, and you must manually restart the server for the server to attempt POST again.

After a specified number of consecutive attempts (automatic or manual), the server reverts to the default UEFI configuration and starts System Setup so that you can make the necessary corrections to the configuration and restart the server. If the server is unable to successfully complete POST with the default configuration, there might be a problem with the system board (system board assembly). You can specify the number of consecutive restart attempts in System Setup. Click **System Settings → Recovery → POST Attempts → POST Attempts Limit**. Available options are 3, 6, 9, and 255.

Voltage planar fault is displayed in the event log

Complete the following steps until the problem is solved.

1. Revert the system to the minimum configuration. See “Node technical specifications” on page 5 for the minimally required number of processors and DIMMs.
2. Restart the system.
   - If the system restarts, add each of the removed items one at a time and restart the system each time until the error occurs. Replace the item for which the error occurs.
   - If the system does not restart, suspect the system board (system board assembly).

Unusual smell

Complete the following steps until the problem is solved.

1. An unusual smell might be coming from newly installed equipment.
2. If the problem remains, contact Lenovo Support.

Server seems to be running hot

Complete the following steps until the problem is solved.

Multiple compute nodes or chassis:

1. Make sure that the room temperature is within the specified range (see “Ambient temperature management” on page 10).
2. Make sure that the fans are installed correctly.
3. Update the UEFI and XCC firmware to the latest versions.
4. Make sure that the fillers in the server are installed correctly (see Chapter 5 “Hardware replacement procedures” on page 39 for detailed installation procedures).
5. Use the IPMI command to ramp up the fan speed to the full fan speed to see whether the issue can be resolved.

   Note: The IPMI raw command should only be used by trained technician and the each system has its own specific IPMI raw command.
6. Check the management processor event log for rising temperature events. If there are no events, the compute node is running within normal operating temperatures. Note that you can expect some variation in temperature.

Cannot enter legacy mode after installing a new adapter

Complete the following procedure to solve the problem.

1. Go to **UEFI Setup → Devices and I/O Ports → Set Option ROM Execution Order**.
2. Move the RAID adapter with operation system installed to the top of the list.
3. Select **Save**.
4. Reboot the system and auto boot to operation system.

Cracked parts or cracked chassis

Contact Lenovo Support.

Optional-device problems

Use this information to solve problems related to optional devices.

- “Insufficient PCIe resources are detected” on page 229
- “A Lenovo optional device that was just installed does not work” on page 230
- “A Lenovo optional device that worked previously does not work now” on page 230

Insufficient PCIe resources are detected

If you see an error message stating “Insufficient PCI Resources Detected,” complete the following steps until the problem is resolved:

1. Press Enter to access System Setup Utility.
2. Select **System Settings → Devices and I/O Ports → MM Config Base**; then, modify the setting to increase the device resources. For example, modify 3 GB to 2 GB or modify 2 GB to 1 GB.
3. Save the settings and restart the system.
4. If the error recurs with the highest device resource setting (1GB), shutdown the system and remove some PCIe devices; then, power on the system.
5. If the reboot failed, repeat step 1 to step 4.

6. If the error recurs, press Enter to access System Setup Utility.
7. Select **System Settings → Devices and I/O Ports → PCI 64–Bit Resource Allocation**, then; modify the setting from **Auto** to **Enable**.
8. If the Boot Device does not support MMIO above 4GB for Legacy Boot, use UEFI Boot Mode or remove/disable some PCIe devices.
9. Contact Lenovo technical support.

A Lenovo optional device that was just installed does not work

1. Make sure that:
   - The device is supported for the server (see https://serverproven.lenovo.com).
   - You followed the installation instructions that came with the device and the device is installed correctly.
   - You have not loosened any other installed devices or cables.
   - You updated the configuration information in the Setup utility. Whenever memory or any other device is changed, you must update the configuration.
2. Reseat the device that you have just installed.
3. Replace the device that you have just installed.

A Lenovo optional device that worked previously does not work now

1. Make sure that all of the cable connections for the device are secure.
2. If the device comes with test instructions, use those instructions to test the device.
3. If the failing device is a SCSI device, make sure that:
   - The cables for all external SCSI devices are connected correctly.
   - Any external SCSI device is turned on. You must turn on an external SCSI device before you turn on the server.
4. Reseat the failing device.
5. Replace the failing device.

Power on and power off problems

Use this information to resolve issues when powering on or powering off the server.

- "Embedded hypervisor is not in the boot list" on page 230
- "Server does not power on" on page 230
- "Server does not power off" on page 231

Embedded hypervisor is not in the boot list

Complete the following steps until the problem is resolved:

1. Make sure that the optional embedded hypervisor flash device is selected on the boot manager `<F12> Select Boot Device` at startup.
2. Make sure that the embedded hypervisor flash device is seated in the connector correctly (see Chapter 5 "Hardware replacement procedures" on page 39).
3. See the documentation that comes with the optional embedded hypervisor flash device to validate that the device is configured correctly.
4. Make sure that other software works on the server.

Server does not power on

Complete the following steps until the problem is resolved:

Note: The power button will not function until approximately five to ten seconds after the server has been connected to power to allow the BMC to complete initialization.

1. Make sure that the power button is working correctly:
   a. Disconnect the server power cords.
   b. Reconnect the power cords.
   c. (Trained technician only) Reseat the front operator panel cable, and then repeat steps 1a and 1b.
      - (Trained technician only) If the server starts, reseat the front operator panel. If the problem remains, replace the front operator panel.
      - If the server does not start, bypass the power button by using the force power-on jumper. If the server starts, reseat the front operator panel. If the problem remains, replace the front operator panel.
2. Make sure that the reset button is working correctly:
   a. Disconnect the server power cords.
   b. Reconnect the power cords.
   c. (Trained technician only) Reseat the front operator panel cable, and then repeat steps 2a and 2b.
      - (Trained technician only) If the server starts, replace the front operator panel.
      - If the server does not start, go to step 3.
3. Make sure that both power supplies installed in the server are of the same type. Mixing different power supplies in the server will cause a system error (the system-error LED on the front operator panel turns on).
4. Make sure that:
   - The power cords are correctly connected to the server and to a working electrical outlet.
   - The type of memory that is installed is correct and the installation rules are met.
   - The DIMMs are fully seated with lock latches fully closed.
   - The LEDs on the power supply do not indicate a problem.
   - The processors are installed in the correct sequence.
5. Reseat the following components:
   a. Front operator panel connector
   b. Power supplies
6. Replace the following components and restart the server each time:
   a. Front operator panel connector
   b. Power supplies
7. If you just installed an optional device, remove it, and restart the server. If the server now starts, you might have installed more devices than the power supply supports.
8. Implement the minimum configuration (see “Node technical specifications” on page 5) to check whether any specific components lock the power permission.
9. Collect the failure information by capturing the system logs and provide it to Lenovo support.
10. See “Power supply LED” on page 210.

Server does not power off

Complete the following steps until the problem is resolved:

1. Determine whether you are using an Advanced Configuration and Power Interface (ACPI) or a non-ACPI operating system. If you are using a non-ACPI operating system, complete the following steps:
   a. Press `Ctrl+Alt+Delete`.
   b. Turn off the server by pressing the power button and holding it down for 5 seconds.

c. Restart the server.

d. If the server fails POST and the power button does not work, disconnect the power cord for 20 seconds; then, reconnect the power cord and restart the server.

2. If the problem remains or if you are using an ACPI-aware operating system, suspect the system board (system board assembly).

Power problems

Use this information to resolve issues related to power.

System error LED is on and event log "Power supply has lost input" is displayed

To resolve the problem, ensure that:

1. The power supply is properly connected to a power cord.
2. The power cord is connected to a properly grounded electrical outlet for the server.
3. Make sure that the power supply AC source is stable within the supported range.
4. Swap the power supply to see if the issue follows the power supply, if it follows the power supply, then replace the failing one.
5. Review the event log and see how the problem it is to follow the event log actions to resolved the problems.

Processor problems

See this section to solve problems related to a processor.

- "The system goes directly to the POST event viewer when it is turned on." on page 232

The system goes directly to the POST event viewer when it is turned on.

1. Check the light path diagnostics LEDs and the Lenovo XClarity Controller event log, and resolve any errors that have occurred.
2. Make sure that the system supports all the processors and that the processors match in speed and cache size. You can view processor details from system setup. To determine if the processor is supported for the system, see https://serverproven.lenovo.com
3. (Trained technician only) Make sure that processor 1 is seated correctly.
4. (Trained technician only) Remove processor 2 and restart the system.
5. Replace the following components one at a time, in the order shown, restarting the system each time:
   a. (Trained technician only) Processor
   b. (Trained technician only) System board

Serial-device problems

Use this information to solve problems related to serial devices.

- "Number of serial ports identified by the operating system is less than the number of installed ports" on page 232
- "Serial device does not work" on page 233

Number of serial ports identified by the operating system is less than the number of installed ports

1. Make sure that:
   - Each port is assigned a unique address in the Setup utility and none of the serial ports is disabled.
   - The serial-port adapter (if one is present) is seated correctly.

2. Reseat the serial port adapter.
3. Replace the serial port adapter.

Serial device does not work

1. Make sure that:
   - The device is compatible with the server.
   - The serial port is enabled and is assigned a unique address.
   - The device is connected to the correct connector (see “System-board connectors” on page 26).
2. Reseat the following components:
   a. Failing serial device
   b. Serial cable
3. Replace the following components one at a time, restarting the server each time:
   a. Failing serial device
   b. Serial cable
4. (Trained technician only) Replace the system board (system board assembly).

Software problems

Use this information to solve software problems.

1. To determine whether the problem is caused by the software, make sure that:
   - The server has the minimum memory that is needed to use the software. For memory requirements, see the information that comes with the software.

     Note: If you have just installed an adapter or memory, the server might have a memory-address conflict.
   - The software is designed to operate on the server.
   - Other software works on the server.
   - The software works on another server.
2. If you receive any error messages while you use the software, see the information that comes with the software for a description of the messages and suggested solutions to the problem.
3. Contact your place of purchase of the software.

Storage drive problems

Use this information to resolve issues related to the storage drives.

- “Server cannot recognize a drive” on page 233

Server cannot recognize a drive

Complete the following steps until the problem is solved.

1. Verify that the drive is supported for the server. See https://serverproven.lenovo.com for a list of supported drives.
2. Make sure that the drive is seated in the drive bay properly and that there is no physical damage to the drive connectors.
3. Run the diagnostics tests for the SAS/SATA adapter and drives. When you start a server and press the key according to the on-screen instructions, the LXPM interface is displayed by default. (For more information, see the “Startup” section in the LXPM documentation compatible with your server at https://pubs.lenovo.com/lxpm-overview/.) You can perform drive diagnostics from this interface. From the Diagnostic page, click **Run Diagnostic → Disk Drive Test**.

Based on those tests:

- If the adapter passes the test but the drives are not recognized, replace the backplane signal cable and run the tests again.
- Replace the backplane.
- If the adapter fails the test, disconnect the backplane signal cable from the adapter and run the tests again.
- If the adapter fails the test, replace the adapter.

Appendix A. Hardware disassembling for recycle

Follow instructions in this section to recycle components with compliance with local laws or regulations.

Disassemble the node for recycle

Follow instructions in this section to disassemble the node before recycling the node tray.

About this task

Attention:

- Read “Installation Guidelines” on page 39 and “Safety inspection checklist” on page 40 to make sure that you work safely.

1. Power off the node (see “Power off the node” on page 46); then, disconnect all external cables from the node.

   Note: If necessary, press the release clip with a flat-head screwdriver to remove an external network cable from the rear of a 2U node.

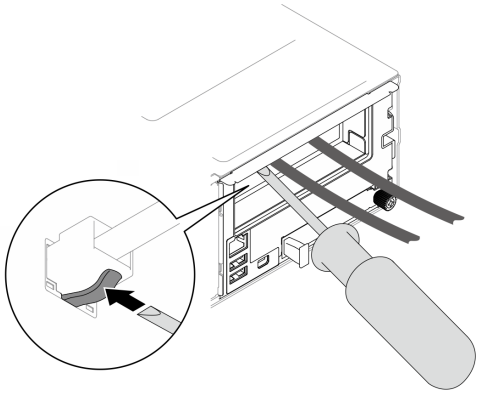

2. Remove the node from the chassis (see “Remove a node from the chassis” on page 70); then, carefully lay the node on a flat, static-protective surface, orienting the node with the front toward you.
3. Remove the top cover (see “Remove the top cover” on page 169).
4. Disconnect all the cables from the drive backplane; then, remove the drive cage assembly from the node and place it on a flat, static-protective surface (see “Remove the drive cage assembly” on page 83).
5. Remove the firmware and RoT security module (see “Remove the firmware and RoT security module” on page 151).
6. Remove all the installed processor and heat sink modules (see “Remove the processor and heat sink” on page 130).
7. Remove the heat sink support bracket.
8. Remove all the memory modules (see “Remove a memory module” on page 104).
9. If necessary, remove the M.2 drives (see “Remove an M.2 drive” on page 99).
10. Remove the microSD card (see “Remove the MicroSD card” on page 109).
11. If the GPU air duct is installed in the node, remove it (see “Remove the GPU air duct” on page 90).
12. Disconnect all the fan cables from the system board; then, remove all the fans from the fan cage (see “Remove a fan” on page 88).

© Copyright Lenovo 2025

13. If the PCIe riser assembly is installed, remove it from the node and disconnect the PCIe cables from the system board (see “Remove the PCIe riser assembly” on page 114 and Chapter 6 “Internal cable routing” on page 175).
14. Remove the power bus bar (see “Remove the power bus bar” on page 122).
15. Disconnect the power distribution board cables from the system board; then, remove the power distribution board (see “Remove the power distribution board” on page 126).
16. If the rear OCP and rear I/O module cables are connected to the system board, remove them (see “Rear I/O and OCP module cable routing” on page 183).
17. Remove the rear I/O module (see “Remove the rear I/O module” on page 147).
18. Remove all the installed cable ducts.
19. Disconnect all the cables from the system board.
20. Remove the system board (see “Remove the system board (Trained technician only)” on page 154).

Disassemble the chassis for recycle

Follow instructions in this section to disassemble the chassis before recycling.

About this task

Attention:

- Read “Installation Guidelines” on page 39 and “Safety inspection checklist” on page 40 to make sure that you work safely.

Step 1. Power off all the nodes (see “Power off the node” on page 46); then, disconnect all external cables from the nodes.

Step 2. Remove all the nodes from the chassis (see “Remove a node from the chassis” on page 70).

Step 3. Remove all power supply units and PSU fillers from the PSU cage (see “Remove a hot-swap power supply” on page 56 and Removal of a PSU filler).

Step 4. Remove the chassis from the rack (see “Remove the chassis from the rack” on page 47); then, lay the chassis on a flat, static-protective surface.

Step 5. Remove the PSU cage from the chassis (see “Remove the PSU cage” on page 62).

Step 6. Remove the chassis midplane from the PSU cage (see “Remove the chassis midplane” on page 65).

Step 7. Remove the left and right EIA brackets from the chassis (see “Remove the EIA brackets from the chassis ” on page 54).

After disassembling the chassis, recycle the units in compliance with local regulations.

Appendix B. Getting help and technical assistance

If you need help, service, or technical assistance or just want more information about Lenovo products, you will find a wide variety of sources available from Lenovo to assist you.

On the World Wide Web, up-to-date information about Lenovo systems, optional devices, services, and support are available at:

http://datacentersupport.lenovo.com

Note: IBM is Lenovo's preferred service provider for ThinkSystem.

Before you call

Before you call, there are several steps that you can take to try and solve the problem yourself. If you decide that you do need to call for assistance, gather the information that will be needed by the service technician to more quickly resolve your problem.

Attempt to resolve the problem yourself

You can solve many problems without outside assistance by following the troubleshooting procedures that Lenovo provides in the online help or in the Lenovo product documentation. The online help also describes the diagnostic tests that you can perform. The documentation for most systems, operating systems, and programs contains troubleshooting procedures and explanations of error messages and error codes. If you suspect a software problem, see the documentation for the operating system or program.

You can find the product documentation for your ThinkSystem products at the following location:

https://pubs.lenovo.com/

You can take these steps to try to solve the problem yourself:

- Check all cables to make sure that they are connected.
- Check the power switches to make sure that the system and any optional devices are turned on.
- Check for updated software, firmware, and operating-system device drivers for your Lenovo product. (See the following links) The Lenovo Warranty terms and conditions state that you, the owner of the Lenovo product, are responsible for maintaining and updating all software and firmware for the product (unless it is covered by an additional maintenance contract). Your service technician will request that you upgrade your software and firmware if the problem has a documented solution within a software upgrade.
  - Drivers and software downloads
    - https://datacentersupport.lenovo.com/products/servers/thinksystem/sd530v3/7dd3/downloads/driver-list
  - Operating system support center
    - https://datacentersupport.lenovo.com/solutions/server-os
  - Operating system installing instructions
    - https://pubs.lenovo.com/thinksystem#os-installation
- If you have installed new hardware or software in your environment, check https://serverproven.lenovo.com to make sure that the hardware and software are supported by your product.
- Refer to Chapter 8 “Problem determination” on page 207 for instructions on isolating and solving issues.

© Copyright Lenovo 2025

- Go to http://datacentersupport.lenovo.com and check for information to help you solve the problem.

  To find the Tech Tips available for your server:

  1. Go to http://datacentersupport.lenovo.com and navigate to the support page for your server.
  2. Click on **How To's** from the navigation pane.
  3. Click **Article Type → Solution** from the drop-down menu.

     Follow the on-screen instructions to choose the category for the problem that you are having.
- Check Lenovo Data Center Forum at https://forums.lenovo.com/t5/Datacenter-Systems/ct-p/sv_eg to see if someone else has encountered a similar problem.

Gathering information needed to call Support

If you require warranty service for your Lenovo product, the service technicians will be able to assist you more efficiently if you prepare the appropriate information before you call. You can also go to http://datacentersupport.lenovo.com/warrantylookup for more information about your product warranty.

Gather the following information to provide to the service technician. This data will help the service technician quickly provide a solution to your problem and ensure that you receive the level of service for which you might have contracted.

- Hardware and Software Maintenance agreement contract numbers, if applicable
- Machine type number (Lenovo 4-digit machine identifier). Machine type number can be found on the ID label, see "Identify the system and access the Lenovo XClarity Controller" on page 33.
- Model number
- Serial number
- Current system UEFI and firmware levels
- Other pertinent information such as error messages and logs

As an alternative to calling Lenovo Support, you can go to https://support.lenovo.com/servicerequest to submit an Electronic Service Request. Submitting an Electronic Service Request will start the process of determining a solution to your problem by making the pertinent information available to the service technicians. The Lenovo service technicians can start working on your solution as soon as you have completed and submitted an Electronic Service Request.

Collecting service data

To clearly identify the root cause of a server issue or at the request of Lenovo Support, you might need collect service data that can be used for further analysis. Service data includes information such as event logs and hardware inventory.

Service data can be collected through the following tools:

- **Lenovo XClarity Provisioning Manager**

  Use the Collect Service Data function of Lenovo XClarity Provisioning Manager to collect system service data. You can collect existing system log data or run a new diagnostic to collect new data.
- **Lenovo XClarity Controller**

  You can use the Lenovo XClarity Controller web interface or the CLI to collect service data for the server. The file can be saved and sent to Lenovo Support.

  – For more information about using the web interface to collect service data, see the "Backing up the BMC configuration" section in the XCC documentation compatible with your server at https://pubs.lenovo.com/lxcc-overview/.

  - For more information about using the CLI to collect service data, see the "XCC `ffdc` command" section in the XCC documentation compatible with your server at https://pubs.lenovo.com/lxcc-overview/.

- **Lenovo XClarity Administrator**

  Lenovo XClarity Administrator can be set up to collect and send diagnostic files automatically to Lenovo Support when certain serviceable events occur in Lenovo XClarity Administrator and the managed endpoints. You can choose to send diagnostic files to Lenovo Support using Call Home or to another service provider using SFTP. You can also manually collect diagnostic files, open a problem record, and send diagnostic files to the Lenovo Support.

  You can find more information about setting up automatic problem notification within the Lenovo XClarity Administrator at https://pubs.lenovo.com/lxca/admin_setupcallhome.

- **Lenovo XClarity Essentials OneCLI**

  Lenovo XClarity Essentials OneCLI has inventory application to collect service data. It can run both in-band and out-of-band. When running in-band within the host operating system on the server, OneCLI can collect information about the operating system, such as the operating system event log, in addition to the hardware service data.

  To obtain service data, you can run the `getinfor` command. For more information about running the `getinfor`, see https://pubs.lenovo.com/lxce-onecli/onecli_r_getinfor_command.

Contacting Support

You can contact Support to obtain help for your issue.

You can receive hardware service through a Lenovo Authorized Service Provider. To locate a service provider authorized by Lenovo to provide warranty service, go to https://datacentersupport.lenovo.com/serviceprovider and use filter searching for different countries. For Lenovo support telephone numbers, see https://datacentersupport.lenovo.com/supportphonelist for your region support details.

Appendix C. Documents and supports

This section provides handy documents, driver and firmware downloads, and support resources.

Documents download

This section provides introduction and download link for handy documents.

Documents

Download the following product documentations at:

https://pubs.lenovo.com/sd530-v3/pdf_files

- ***Rail Installation Guides***
  - Rail installation in a rack

    https://pubs.lenovo.com/st650-v2/thinksystem_l_shaped_rail_kit.pdf
- ***User Guide***
  - Complete overview, system configuration, hardware components replacing, and troubleshooting.

    Selected chapters from the *User Guide*:
    - ***System Configuration Guide*** **:** Server overview, components identification, system LEDs and diagnostics display, product unboxing, setting up and configuring the server.
    - ***Hardware Maintenance Guide*** **:** Installing hardware components, cable routing, and troubleshooting.
- ***Messages and Codes Reference***
  - XClarity Controller, LXPM, and uEFI events
- ***UEFI Manual***
  - UEFI setting introduction

Support websites

This section provides driver and firmware downloads and support resources.

Support and downloads

- Drivers and Software download website for ThinkSystem SD530 V3
  - https://datacentersupport.lenovo.com/products/servers/thinksystem/sd530v3/7dd3/downloads/driver-list
- Lenovo Data Center Forum
  - https://forums.lenovo.com/t5/Datacenter-Systems/ct-p/sv_eg
- Lenovo Data Center Support for ThinkSystem SD530 V3
  - https://datacentersupport.lenovo.com/products/servers/thinksystem/sd530v3/7dd3
- Lenovo License Information Documents
  - https://datacentersupport.lenovo.com/documents/lnvo-eula
- Lenovo Press website (Product Guides/Datasheets/White papers)
  - https://lenovopress.lenovo.com/

© Copyright Lenovo 2025

- Lenovo Privacy Statement
  - https://www.lenovo.com/privacy
- Lenovo Product Security Advisories
  - https://datacentersupport.lenovo.com/product_security/home
- Lenovo Product Warranty Plans
  - http://datacentersupport.lenovo.com/warrantylookup
- Lenovo Server Operating Systems Support Center website
  - https://datacentersupport.lenovo.com/solutions/server-os
- Lenovo ServerProven website (Options compatibility lookup)
  - https://serverproven.lenovo.com
- Operating System Installation Instructions
  - https://pubs.lenovo.com/thinksystem#os-installation
- Submit an eTicket (service request)
  - https://support.lenovo.com/servicerequest
- Subscribe to Lenovo Data Center Group product notifications (Stay up to date on firmware updates)
  - https://datacentersupport.lenovo.com/solutions/ht509500

Appendix D. Notices

Lenovo may not offer the products, services, or features discussed in this document in all countries. Consult your local Lenovo representative for information on the products and services currently available in your area.

Any reference to a Lenovo product, program, or service is not intended to state or imply that only that Lenovo product, program, or service may be used. Any functionally equivalent product, program, or service that does not infringe any Lenovo intellectual property right may be used instead. However, it is the user's responsibility to evaluate and verify the operation of any other product, program, or service.

Lenovo may have patents or pending patent applications covering subject matter described in this document. The furnishing of this document is not an offer and does not provide a license under any patents or patent applications. You can send inquiries in writing to the following:

Lenovo (United States), Inc.
1009 Think Place
Morrisville, NC 27560
U.S.A.
Attention: Lenovo VP of Intellectual Property

LENOVO PROVIDES THIS PUBLICATION “AS IS” WITHOUT WARRANTY OF ANY KIND, EITHER EXPRESS OR IMPLIED, INCLUDING, BUT NOT LIMITED TO, THE IMPLIED WARRANTIES OF NON-INFRINGEMENT, MERCHANTABILITY OR FITNESS FOR A PARTICULAR PURPOSE. Some jurisdictions do not allow disclaimer of express or implied warranties in certain transactions, therefore, this statement may not apply to you.

This information could include technical inaccuracies or typographical errors. Changes are periodically made to the information herein; these changes will be incorporated in new editions of the publication. Lenovo may make improvements and/or changes in the product(s) and/or the program(s) described in this publication at any time without notice.

The products described in this document are not intended for use in implantation or other life support applications where malfunction may result in injury or death to persons. The information contained in this document does not affect or change Lenovo product specifications or warranties. Nothing in this document shall operate as an express or implied license or indemnity under the intellectual property rights of Lenovo or third parties. All information contained in this document was obtained in specific environments and is presented as an illustration. The result obtained in other operating environments may vary.

Lenovo may use or distribute any of the information you supply in any way it believes appropriate without incurring any obligation to you.

Any references in this publication to non-Lenovo Web sites are provided for convenience only and do not in any manner serve as an endorsement of those Web sites. The materials at those Web sites are not part of the materials for this Lenovo product, and use of those Web sites is at your own risk.

Any performance data contained herein was determined in a controlled environment. Therefore, the result obtained in other operating environments may vary significantly. Some measurements may have been made on development-level systems and there is no guarantee that these measurements will be the same on generally available systems. Furthermore, some measurements may have been estimated through extrapolation. Actual results may vary. Users of this document should verify the applicable data for their specific environment.

© Copyright Lenovo 2025

Trademarks

Lenovo, the Lenovo logo, ThinkSystem, Flex System, System x, NeXtScale System, and x Architecture are trademarks of Lenovo in the United States, other countries, or both.

Intel and Intel Xeon are trademarks of Intel Corporation in the United States, other countries, or both.

Internet Explorer, Microsoft, and Windows are trademarks of the Microsoft group of companies.

Linux is a registered trademark of Linus Torvalds.

Other company, product, or service names may be trademarks or service marks of others.

Important notes

Processor speed indicates the internal clock speed of the processor; other factors also affect application performance.

CD or DVD drive speed is the variable read rate. Actual speeds vary and are often less than the possible maximum.

When referring to processor storage, real and virtual storage, or channel volume, KB stands for 1 024 bytes, MB stands for 1 048 576 bytes, and GB stands for 1 073 741 824 bytes.

When referring to drive capacity or communications volume, MB stands for 1 000 000 bytes, and GB stands for 1 000 000 000 bytes. Total user-accessible capacity can vary depending on operating environments.

Maximum internal drive capacities assume the replacement of any standard drives and population of all drive bays with the largest currently supported drives that are available from Lenovo.

Maximum memory might require replacement of the standard memory with an optional memory module.

Each solid-state memory cell has an intrinsic, finite number of write cycles that the cell can incur. Therefore, a solid-state device has a maximum number of write cycles that it can be subjected to, expressed as `total bytes written` (TBW). A device that has exceeded this limit might fail to respond to system-generated commands or might be incapable of being written to. Lenovo is not responsible for replacement of a device that has exceeded its maximum guaranteed number of program/erase cycles, as documented in the Official Published Specifications for the device.

Lenovo makes no representations or warranties with respect to non-Lenovo products. Support (if any) for the non-Lenovo products is provided by the third party, not Lenovo.

Some software might differ from its retail version (if available) and might not include user manuals or all program functionality.

Electronic emission notices

When you attach a monitor to the equipment, you must use the designated monitor cable and any interference suppression devices that are supplied with the monitor.

Taiwan Region BSMI RoHS declaration

單元 Unit	限用物質及其化學符號 Restricted substances and its chemical symbols					
	鉛Lead (Pb)	汞Mercury (Hg)	鎘Cadmium (Cd)	六價鉻 Hexavalent chromium (Cr^{+6})	多溴聯苯 Polybrominated biphenyls (PBB)	多溴二苯醚 Polybrominated diphenyl ethers (PBDE)
機架	○	○	○	○	○	○
外部蓋板	○	○	○	○	○	○
機械組合件	–	○	○	○	○	○
空氣傳動設備	–	○	○	○	○	○
冷卻組合件	–	○	○	○	○	○
內存模組	–	○	○	○	○	○
處理器模組	–	○	○	○	○	○
電纜組合件	–	○	○	○	○	○
儲備設備	–	○	○	○	○	○
印刷電路板	–	○	○	○	○	○

備考1. 〝超出0.1 wt %〞及〝超出0.01 wt %〞係指限用物質之百分比含量超出百分比含量基準值。

Note1 : "exceeding 0.1wt%" and "exceeding 0.01 wt%" indicate that the percentage content of the restricted substance exceeds the reference percentage value of presence condition.

備考2. 〝○〞係指該項限用物質之百分比含量未超出百分比含量基準值。

Note2 : "○"indicates that the percentage content of the restricted substance does not exceed the percentage of reference value of presence.

備考3. 〝-〞係指該項限用物質為排除項目。

Note3 : The "-" indicates that the restricted substance corresponds to the exemption.

Taiwan import and export contact information

Contacts are available for Taiwan import and export information.

委製商/進口商名稱: 台灣聯想環球科技股份有限公司
進口商地址: 台北市南港區三重路 66 號 8 樓
進口商電話: 0800-000-702