User's Manual

FreeZone® 1 Liter Benchtop Freeze Dry Systems

Models

7740020
7740021
7740030
7740031
7740040
7740041

To receive important product updates, complete your product registration card online at **register.labconco.com**

Protecting your laboratory environment
LABCONCO®

Labconco Corporation
8811 Prospect Avenue
Kansas City, MO 64132-2696
800-821-5525, 816-333-8811
FAX 816-363-0130
E-MAIL labconco@labconco.com
HOME PAGE www.labconco.com

Please read the User's Manual before operating the equipment.

Copyright © 2004, 2007 Labconco Corporation. All rights reserved.

The information contained in this manual and the accompanying products are copyrighted and all rights reserved by Labconco Corporation. Labconco Corporation reserves the right to make periodic design changes without obligation to notify any person or entity of such change.

Warranty

Labconco provides a warranty on all parts and factory workmanship. The warranty includes areas of defective material and workmanship, provided such defect results from normal and proper use of the equipment.

The warranty for all Labconco products will expire one year from date of installation or two years from date of shipment from Labconco, whichever is sooner, except the following;

- Purifier® Delta® Series Biological Safety Cabinets and PuriCare® Lab Animal Research Stations carry a three-year warranty from date of installation or four years from date of shipment from Labconco, whichever is sooner.
- SteamScrubber® & FlaskScrubber® Glassware Washers carry a two-year warranty from date of installation or three years from date of shipment from Labconco, whichever is sooner.
- Blood Drawing Chairs carry a ten year warranty.
- Carts carry a lifetime warranty.
- Glassware is not warranted from breakage when dropped or mishandled.

This limited warranty covers parts and labor, but not transportation and insurance charges. In the event of a warranty claim, contact Labconco Corporation or the dealer who sold you the product. If the cause is determined to be a manufacturing fault, the dealer or Labconco Corporation will repair or replace all defective parts to restore the unit to operation. Under no circumstances shall Labconco Corporation be liable for indirect, consequential, or special damages of any kind. This statement may be altered by a specific published amendment. No individual has authorization to alter the provisions of this warranty policy or its amendments. Lamps and filters are not covered by this warranty. Damage due to corrosion or accidental breakage is not covered.

Returned or Damaged Goods

Do not return goods without the prior authorization from Labconco. Unauthorized returns will not be accepted. If your shipment was damaged in transit, you must file a claim directly with the freight carrier. Labconco Corporation and its dealers are not responsible for shipping damages.

The United States Interstate Commerce Commission rules require that claims be filed with the delivery carrier within fifteen (15) days of delivery.

Limitation of Liability

The disposal and/or emission of substances used in connection with this equipment may be governed by various federal, state, or local regulations. All users of this equipment are required to become familiar with any regulations that apply in the user's area concerning the dumping of waste materials in or upon water, land, or air and to comply with such regulations. Labconco Corporation is held harmless with respect to user's compliance with such regulations.

Contacting Labconco Corporation

If you have questions that are not addressed in this manual, or if you need technical assistance, contact Labconco's Customer Service Department or Labconco's Product Service Department at 1-800-821-5525 or 1-816-333-8811, between the hours of 7:00 a.m. and 6:00 p.m., Central Standard Time.

Part #7429300, Rev. C
ECO E139

TABLE OF CONTENTS

CHAPTER 1: INTRODUCTION 1
- Freeze Dry Process 1
- Freeze Dry Rates 2
- Freeze Dry Capacity 3
- Samples Containing Volatile Substances 4
- About This Manual 4
- Typographical Conventions 6
- Your Next Step 6

CHAPTER 2: PREREQUISITES 7
- Electrical Requirements 7
- Location Requirements 8
- Vacuum Pump Requirements 8
- Chamber or Manifold Requirements 8

CHAPTER 3: GETTING STARTED 9
- Unpacking Your Freeze Dryer 9
- Freeze Dryer Components 10
- Setting Up Your Freeze Dryer 11
  - Vacuum Pump Connection 11
  - Electrical Connection 11
  - Drying Chamber or Drying Manifold Installation 12
- Chemical Resistance of Freeze Dryer Components 12
- Solvent Safety Precautions 13

CHAPTER 4: USING YOUR FREEZE DRYER 15
- Freeze Dryer Controls 16
- Operation Checklist 16
- Vacuum Pump Ballast Setting 17
- Operating the Freeze Dryer 17
  - Set-Up 17
  - Automatic Start-Up 19
  - Manual Start-Up 20
  - Pre Freezing Samples 21
  - Adding Sample 21
  - Shut Down 22

Defrosting 22

CHAPTER 5: MAINTAINING YOUR FREEZE DRYER 24

CHAPTER 6: TROUBLESHOOTING 26
Vacuum Pump 26
Gaskets, Tubing, Connections, Sample Valves 27
System Components & Collection Chamber Isolation 29
Refrigeration Module Operation 31

CHAPTER 7: MODIFYING YOUR FREEZE DRYER DISPLAY 32
Temperature and Vacuum Display 32
Modifying the Display 32

APPENDIX A: FREEZE DRYER COMPONENTS 34

APPENDIX B: FREEZE DRYER DIMENSIONS 37

APPENDIX C: FREEZE DRYER SPECIFICATIONS 38
Electrical Specifications 38
Environmental Conditions 38
Wiring Diagram (115V) 39
Wiring Diagram (230V) 40

APPENDIX D: FREEZE DRYER ACCESSORIES 41

DECLARATION OF CONFORMITY 49

CHAPTER 1
INTRODUCTION

Congratulations on your purchase of a Labconco FreeZone® Freeze Dry System, which is designed for laboratory lyophilization procedures. The refrigerant used in the refrigeration system is CFC-free so it will not endanger the environment. The unit is easy to install and maintain. Proper care and maintenance of this product will result in many years of dependable service.

Freeze Dry Process

Freeze drying is an important process in sample preparation and for the preservation and storage of biologicals, pharmaceuticals and foods. Of the various methods of dehydration, freeze drying (lyophilization) is especially suited for substances that are heat sensitive. Other than food processing (e.g., coffee, whole dinners), freeze drying has been extensively used in the development of pharmaceuticals (e.g., antibiotics) and preservation of biologicals (e.g., proteins, plasma, viruses and cell lines). The nondestructive nature of this process has been demonstrated by the retention of viability in freeze dried viruses and microorganisms.

Freeze drying is a process whereby water or other solvent is removed from frozen material by converting the frozen water directly into vapor without the intermediate formation of liquid water. The basis for this sublimation process involves the absorption of heat by the frozen sample in order to vaporize the ice; the use of a vacuum pump to enhance the removal of water vapor from the surface of the sample; the transfer of water vapor to a collector; and the removal of heat by the collector in order to condense the water vapor. In essence, the freeze dry process is a balance between the heat absorbed by the sample to vaporize the ice and the heat removed from the collector to convert the water vapor into ice.

Freeze Dry Rates

The efficiency of the freeze drying process is dependent upon the surface area and the thickness of the sample, the collector temperature and vacuum obtained, the eutectic point and solute concentration of the sample. It is important to remember these factors when trying to obtain efficient utilization of your freeze dry system. A listing of selected materials and their approximate drying times are shown in Table 1 for your reference.

Table 1

SAFE TEMPERATURE AND DRYING TIMES FOR SELECTED MATERIALS			
Material 10mm Thick	Safe Temperature °C	Collector Temperature °C	Hours (Approx.)
Milk	-5	-40	10
Urea	-7	-40	10
Blood Plasma	-10 to -25	-40	16
Serum	-25	-40	18
Vaccinia	-30 to -40	-50	22
Influenza Vaccine	-30	-50	24
Human Tissue	-30 to -40	-50	48
Vegetable Tissue	-50	-80	60

*Total sample quantities are contingent on various freeze dryer capacities.

Up to the point of overloading the system, the greater the surface area of the sample, the faster the rate of freeze drying. By contrast, for a given surface area, the thicker the sample the slower the rate of freeze drying. This is based on the fact that the heat of sublimation is usually absorbed on one side of the frozen sample and must travel through the frozen layer to vaporize water at the other surface. In addition, as the sample is freeze dried, the water vapor must travel through the layer of dried material. The thicker the sample, the greater the chance that the dried layer may collapse which would cause an additional decrease in the rate of freeze drying.

The surface area and thickness of the sample can usually be ignored when each sample contains only a few milliliters. However, for larger volumes, the samples should be shell frozen to maximize the surface area and minimize the thickness of the sample. The volume of the freeze dry flask should be two to three times the volume of the sample.

In order for lyophilization to occur, ice must be removed from the frozen sample via sublimation. This is accomplished by the collector and the vacuum pump. The collector, which should be at least 15 to 20°C colder than the eutectic temperature (melting temperature) of the sample, traps vapor as ice. Since the vapor pressure at the collector is lower than that of the sample, the flow of water vapor is from the sample to the collector. Since this vapor diffusion process occurs very slowly under normal atmospheric conditions, a good vacuum is essential to maintain an efficient rate. In many applications, the maintenance of a vacuum of 0.133 mBar or less is recommended.

The rate of freeze drying is directly proportional to the vapor pressure and the vapor pressure is dependent upon both eutectic temperature and solute concentration of the sample. For example, a solution of sodium chloride and water would freeze dry at a slower rate than pure water. The eutectic temperature of a sodium chloride solution is about –21°C and at this temperature the vapor pressure is about 1/16 that of water at 0°C. Although the eutectic temperature is not dependent upon the concentration of sodium chloride, the vapor pressure of the water would decrease as the concentration of sodium chloride increased. This is due to the fact that as the solute concentration increases, less of the surface area of the frozen sample is occupied by water. In general, most solutions or biological samples will have a eutectic temperature of –10 to –25°C. However, if the sample contains a simple sugar such as glucose or if the sample is animal or plant tissue, the eutectic temperature may be as low as –30° to –50°C.

Freeze Dry Capacity

The volume of a sample that can be freeze dried at one time is related to factors discussed previously and the size and design of the freeze dry system. With any given instrument, the capacity is based on the surface area of the sample; the eutectic temperature and concentration of the sample; and the rate and amount of heat transferred to the frozen sample. Of these factors, the eutectic temperature is the most important factor in determining the amount of sample that can be freeze dried at one time, particularly when flasks are used. This is because as the eutectic temperature decreases, the vapor pressure decreases but the rate of heat absorption by the sample does not change. This tends to promote melting of the sample which leads to a marked increase in vapor pressure and ultimately overloads the collector and vacuum pump. Samples that have eutectic temperatures of –20°C or lower should be placed on the freeze dry system one flask at a time so that the

vacuum in the system may recover before adding another sample to the system. If the vacuum does not recover, the capacity of the freeze dry system has been exceeded and the sample should be removed.

If there is a problem with a particular type of sample melting when placed on the freeze dry system, dilution of the sample with more water or providing some insulation around the flask to decrease the rate of heat absorption by the sample may help. If the eutectic temperature of the sample is –40 to –60°C, the freeze dry system selected for use must be equipped with cascade type refrigeration so that the collector temperature can be cooled to below –75°C, or a dry ice/solvent trap may be used between the collector and the vacuum pump.

Samples Containing Volatile Substances

In certain cases the solvent in a sample to be freeze dried may contain volatile components such as acetonitrile, methanol, acetic acid, formic acid or pyridine. In addition to these substances having an effect on the eutectic temperature, they may increase the vapor pressure at the surface of the sample. Also, compared to water, they will require the absorption of less heat for sublimation to occur. Hence, samples that contain volatile substances will have a greater tendency to melt, particularly when placed in flasks or exposed to room temperature. If a sample containing a volatile substance tends to melt when placed on a freeze dry system, dilution of the sample with more water will help keep the sample frozen. For example, a 0.2M solution of acetic acid is much easier to freeze dry than a 0.5M solution.

About This Manual

This manual is designed to help you learn how to install, use, and maintain your Freeze Dryer. Instructions for performing routine maintenance and making minor modifications to your Freeze Dryer are also included.

Chapter 1: Introduction provides a brief overview of the Freeze Dryer, explains the organization of the manual, and defines the typographical conventions used in the manual.

Chapter 2: Prerequisites explains what you need to do to prepare your site before you install your Freeze Dryer. Electrical requirements are discussed.

Chapter 3: Getting Started contains the information you need to properly unpack, inspect and install your Freeze Dryer.

Chapter 4: Using Your Freeze Dryer discusses the basic operation of your Freeze Dryer. Information on how to attach samples and run the Freeze Dryer is included.

Chapter 5: Maintaining Your Freeze Dryer explains how to perform routine maintenance on your Freeze Dryer.

Chapter 6: Troubleshooting contains a table of problems you may encounter while using your Freeze Dryer, including the probable causes of the problems, and suggested corrective actions.

Chapter 7: Modifying your Freeze Dryer Display explains how to recalibrate your Freeze Dryer display.

Appendix A: Freeze Dryer Components contains labeled diagrams of the components of the Freeze Dryer.

Appendix B: Freeze Dryer Dimensions contains comprehensive diagrams showing the dimensions for the Freeze Dryer.

Appendix C: Freeze Dryer Specifications contains product specifications. A wiring diagram for the Freeze Dryer is also included.

Appendix D: Freeze Dryer Accessories lists the part numbers and descriptions of all of the accessories available for your Freeze Dryer.

Typographical Conventions

Recognizing the following typographical conventions will help you understand and use this manual:

- Book, chapter, and section titles are shown in italic type (e.g., *Chapter 3: Getting Started*).
- Steps required to perform a task are presented in a numbered format.
- Comments located in the margins provide suggestions, reminders, and references.



- Critical information is presented in boldface type in paragraphs that are preceded by the exclamation icon. Failure to comply with the information following an exclamation icon may result in injury to the user or permanent damage to your Freeze Dryer.



- Important information is presented in capitalized type in paragraphs that are preceded by the pointer icon. It is imperative that the information contained in these paragraphs be thoroughly read and understood by the user.

Your Next Step

If your Freeze Dryer needs to be installed, proceed to *Chapter 2: Prerequisites* to ensure your installation site meets all of the requirements. Then, go to *Chapter 3: Getting Started* for instructions on how to install your Freeze Dryer and make all of the necessary connections.

For information on the operational characteristics of your Freeze Dryer, go to *Chapter 4: Using Your Freeze Dryer.*

If your Freeze Dryer is installed and you need to perform routine maintenance on the Freeze Dryer, proceed to *Chapter 5: Maintaining Your Freeze Dryer.*

Refer to *Chapter 6: Troubleshooting* if you are experiencing problems with your Freeze Dryer.

CHAPTER 2
PREREQUISITES

Before you install your Freeze Dryer, you need to prepare your site for installation. Carefully examine the location where you intend to install your Freeze Dryer. You must be certain that the area is level and of solid construction. An electrical source must be located near the installation site.

Carefully read this chapter to learn:

- the electrical supply requirements.
- the vacuum pump requirements.

Refer to *Appendix C: Freeze Dryer Specifications* for complete Freeze Dryer electrical and environmental conditions, specifications and requirements.

Electrical Requirements

The Freeze Dryer requires a dedicated electrical outlet. This outlet requires a 20 Amp circuit breaker or fuse for models rated at 115V (60 Hz). An outlet equipped with a 15 Amp circuit breaker or fuse is required for models rated at 230V (50/60 Hz). The power cord on 115V models are equipped with a 20 Amp NEMA 5-20P plug. The power cord on the 230V models is equipped with a NEMA 6-20P plug. If this does not match the available receptacle, remove this plug and replace it with an approved plug of the suitable style.

Location Requirements

The Freeze Dryer should be located in an area that provides an unobstructed flow of air around the cabinet. This air cools the refrigeration system. The refrigeration system draws air through the rear panel and exhausts it through the sides. A minimum of 3" must be allowed between the back and both sides of the Freeze Dryer and adjacent wall surfaces. Restriction of airflow during operation could adversely affect performance.

Refer to *Appendix C: Freeze Dryer Specifications* for dimensional drawings of the Freeze Dryer. The space must be large enough to accommodate the vacuum pump, which will be used with the Freeze Dryer.

Vacuum Pump Requirements

A vacuum pump must be provided by the user. A vacuum pump with a displacement of 86 liters per minute and 0.0002 mBar ultimate pressure is adequate for most samples. The inlet fitting on the vacuum pump must be suitable for 3/4" ID vacuum hose, which is provided. It is recommended that the vacuum pump is equipped with an exhaust filter to minimize oil mist exhausting from the vacuum pump.

Vacuum pumps used with 115V models should be equipped with a 115V, 15 Amp NEMA 5-15P plug. Vacuum pumps used with 230V models should be equipped with a reverse IEC plug. This plug is included with 230V models. This will allow the vacuum pump to be plugged into the receptacle on the back panel of the freeze dryer. See *Appendix D: Freeze Dryer Accessories* for vacuum pumps available from Labconco.

Chamber or Manifold Requirements

A freeze drying chamber or manifold is not included and must be purchased separately. These allow samples to be attached to the Freeze Dryer. See *Appendix D: Freeze Dryer Accessories* for available chambers and manifolds.

CHAPTER 3
GETTING STARTED

Now that the site for your Freeze Dryer is properly prepared, you are ready to unpack, inspect, install and test your Freeze Dryer. Read this chapter to learn how to:

- unpack and move your Freeze Dryer.
- set up your Freeze Dryer.
- connect the electrical supply source to your Freeze Dryer.
- properly exhaust your Freeze Dryer.
- safely use solvents with your Freeze Dryer.



The FreeZone 1 Liter Freeze Dry System weighs over 82 lbs. (37 Kg). If you must lift the Freeze Dryer manually, use at least two (2) persons and follow safe lifting guidelines.

Unpacking Your Freeze Dryer

Carefully unpack your Freeze Dryer and inspect it for damage that may have occurred in transit. If your Freeze Dryer is damaged, notify the delivery carrier immediately and retain the entire shipment intact for inspection by the carrier.

The United States Interstate Commerce Commission rules require that claims be filed with the delivery carrier within fifteen (15) days of delivery.



DO NOT RETURN GOODS WITHOUT THE PRIOR AUTHORIZATION OF LABCONCO. UNAUTHORIZED RETURNS WILL NOT BE ACCEPTED.



IF YOUR FREEZE DRYER WAS DAMAGED IN TRANSIT, YOU MUST FILE A CLAIM DIRECTLY WITH THE FREIGHT CARRIER. LABCONCO CORPORATION AND ITS DEALERS ARE NOT RESPONSIBLE FOR SHIPPING DAMAGE.



DO NOT DISCARD THE CARTON OR PACKING MATERIAL FOR YOUR FREEZE DRYER UNTIL YOU HAVE CHECKED ALL OF THE COMPONENTS AND INSTALLED AND TESTED THE FREEZE DRYER.

Freeze Dryer Components

Locate the model of Freeze Dryer you received in the following table. Verify that the components listed are present and undamaged.

Catalog #	Product Description
7740020	1 Liter Freeze Dryer – 115V, 60 Hz
7740021	1 Liter Freeze Dryer with Teflon-Coated Chamber – 115V, 60 Hz
7740030	1 Liter Freeze Dryer – 220/240V, 50 Hz
7740031	1 Liter Freeze Dryer with Teflon-Coated Chamber – 220/240V, 50 Hz
7740040	1 Liter Freeze Dryer – 208/230V, 60 Hz
7740041	1 Liter Freeze Dryer with Teflon-Coated Chamber – 208/230V, 60 Hz

Plus the Following:

Part #	Component Description
7429300	User's Manual
1336400	Power Cord – 115V
	or
1342100	Power Cord – 230V
1291000	Plug (230V models only)
7646000	Vacuum Hose
1967600	Hose Clamps (2)
7690000	Chamber Lid
7688500	Lid Gasket

If you did not receive one or more of the components listed for your Freeze Dryer, or if any of the components are damaged, contact Labconco Corporation immediately for further instructions.

Setting Up Your Freeze Dryer

After you verify receipt of the proper components, move your Freeze Dryer to the location where you want to install it. Then, follow the steps listed below.

Vacuum Pump Connection

A vacuum pump as described in *Chapter 2: Prerequisites* is required to operate your Freeze Dry System properly. The Freeze Dryer is equipped with a 3/4" ID, heavy wall, vacuum hose for connecting to the collector chamber to the vacuum pump.



Make certain that the oil in the vacuum pump is at the proper level.

Place the vacuum pump near the Freeze Dryer. Connect the vacuum pump power cord to the receptacle on the back of the cabinet labeled “vacuum pump”. If the vacuum pump has an off/on switch, turn the switch on. The vacuum pump will be controlled by the Freeze Dryer. Connect the vacuum pump inlet port to the vacuum tube on the back of the cabinet with the vacuum hose and clamps provided. If necessary, cut the hose to proper length to allow for gentle bends without kinks.

Models rated for use on 230V have a reverse IEC connector for attaching the vacuum pump power cord. A plug is supplied that can be installed on the vacuum pump power cord, if necessary.

Electrical Connection

Plug the power cord into the receptacle on the back of the Freeze Dryer and plug the other end into a suitable power receptacle.

Drying Chamber or Drying Manifold Installation

The drying chamber or drying manifold, purchased separately, may be positioned directly above the 3-inch hole in the collector chamber lid. When vacuum is applied to the system, the chamber will be held securely in place.

Chemical Resistance of Freeze Dryer Components

The FreeZone Freeze Dry System is designed to be chemically resistant to most compounds that are commonly used in freeze drying processes. However, by necessity, the freeze dryer is comprised of a number of different materials, some of which may be attacked and degraded by certain chemicals. The degree of degradation is dependent on the concentration and exposure duration. Some of the major components of the FreeZone Freeze Dry System that are susceptible to degradation are as follows:

		Acids			Buffers		Solvents						
Component	**Material**	**Acetic Acid 20%**	**Formic Acid**	**Trifluoroacetic Acid (TFA)**	**Calcium Chloride**	**Sodium Phosphate**	**Acetone**	**Acetonittirle**	**Carbon Tetrochloride**	**Cyclohexane**	**Dioxane**	**Methyl t-Butyl Ether (BTBE)**	**Pyridine**
Valve Stem	Acetal (Delrin)	C	D	D	D		D						
Collector Lid	Acrylic			D			D	D	D				
Hoses, Gaskets & Valve Bodies	Neoprene	C	D	D			C	C	D	D	D	C	D
Flask Top	Silicon Rubber		C	D		D			D	D	D	C	D
Chamber & Fittings	Stainless Steel				C								

C – Moderate degradation; Limited use

D – Severe degradation; Infrequent use recommended; Immediate thorough cleaning required.

- Most common compounds used in freeze drying processes, if allowed to enter the vacuum pump, will degrade the oil and cause damage to the vacuum pump.
- Sugars and proteins typically will have minimal negative effect on any of the materials of construction.

When using compounds in the Freeze Dryer that are hostile to the materials of construction, it is imperative that the equipment is thoroughly cleaned after use.

- Rubber and plastic components that have been exposed to damaging compounds should be removed and flushed with water.
- The oil in the vacuum pump should be checked often. It must be changed if it is cloudy, shows particles or is discolored. The useful life of vacuum pump oil can be extended if the vacuum pump is operated for an extended period of time after a freeze dry run. This allows contaminants to be purged from the hot oil. This must be done with the inlet to the pump blocked off to prevent air from free flowing through the pump. If the pump is operated at an elevated vacuum level, (>10mBar) oil may be expelled from the pump and damage could occur.

Another way to extend the life of the vacuum pump is to install an optional secondary trap in the line between the Freeze Dryer and the vacuum pump. Contact Labconco for ordering information.

With prudent maintenance the FreeZone Freeze Dry System will provide years of service. Warranty on the affected parts will be voided if maintenance has been obviously neglected. If you have questions about using specific compounds in the Freeze Dryer, contact Labconco Technical Service at 1-800-821-5525 or 816-333-8811 or e-mail: labconco@labconco.com.



Solvent Safety Precautions

Solvents used in the Freeze Dryer may be flammable or hazardous to your health. Use extreme caution and keep sources of ignition away from the solvents.

When using flammable or hazardous solvents, the vacuum pump must be vented to or operated inside a fume hood.

Hazardous materials such as strong acids or bases, radioactive substances and volatile organics must be handled carefully and promptly cleaned up if spilled. If a sample is spilled in the collector chamber it must immediately be cleaned up.

WARNING: The disposal of substances used in connection with this equipment may be governed by various Federal, State or local regulations. All users of this equipment are urged to become familiar with any regulations that apply in the user's area concerning the dumping of waste materials in or upon water, land or air and to comply with such regulations.

CHAPTER 4
USING YOUR FREEZE DRYER

After your Freeze Dryer has been installed as detailed in *Chapter 3: Getting Started*, you are ready to begin using your Freeze Dryer. Read this chapter to learn how to:

- operate the controls.
- understand the display.
- connect samples.



Do not use the Freeze Dryer in a manner not specified by the manufacturer (refer to *Appendix C: Freeze Dryer Specifications*). The electrical protection properties of the Freeze Dryer may be impaired if the Freeze Dryer is used inappropriately.

Freeze Dryer Controls

The control panel for the Freeze Dryer is shown below with a description about its function.

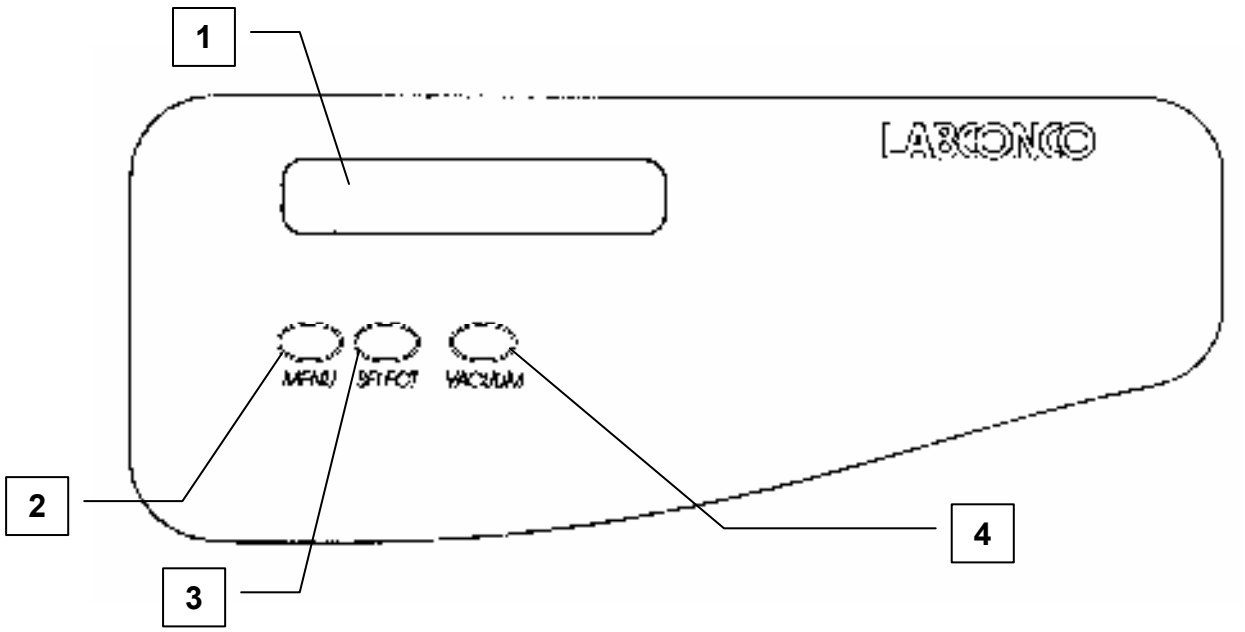

1. LCD Display – Displays system operating parameters and set-up parameters.
2. Menu Switch – This switch is used to change the display from operating system parameters to set-up parameters.
3. Select Switch – Used to select set-up parameters.
4. Vacuum Switch – Used to start the vacuum pump manually or to stop the vacuum pump when operating in either the auto or manual start-up mode.
5. Main Power Switch – Turns the Freeze Dryer on or off. (Not shown, located on the right side of the cabinet).

Operation Checklist

The following checklist should be followed prior to each use of your Freeze Dryer:

1. Wipe the interior of the collector chamber with a soft cloth or paper towel to remove any accumulated moisture.
2. Check the collector chamber drain hose to ensure that the hose is free of moisture and that the drain plug is securely installed.
3. Using a soft, lint-free cloth or paper towel, wipe the collector chamber lid gasket to remove any dirt and contaminants that could cause a vacuum leak. Vacuum grease is not required on the lid gasket to obtain a proper vacuum seal.

4. Remove the accessory drying chamber or manifold from the connection port and using a soft, lint-free cloth or paper towel, wipe the port gasket and sealing surfaces of the drying chamber/manifold to remove any dirt and contaminants that could cause a vacuum leak. Reinstall the drying chamber or manifold on the port. Vacuum grease is not required on the port gasket to obtain a proper vacuum seal.
5. Check that each sample valve is closed or in the "vent" position.

Vacuum Pump Ballast Setting

Most vacuum pumps are equipped with a gas ballast mechanism. The freeze dry process requires high vacuum (0.133 mBar). Therefore, it is recommended that the gas ballast be closed during the operation of the Freeze Dry System. If the gas ballast is left open for extended periods of operation, the oil can be pumped out the exhaust, causing the pump to fail.

Operating the Freeze Dryer

Set-Up

The Freeze Dryer may be configured to automatically start the vacuum pump when the collector temperature reaches –40°C. The display units for vacuum may be selected to be mBar, Pascal (Pa) or Torr and the temperature may be displayed as °F or °C. The run time of the refrigeration system and the vacuum pump may be monitored.

To configure your Freeze Dryer, turn the power switch ON and press MENU. The display will show:

VACUUM PUMP START UP
MANUAL AUTO

- Either MANUAL or AUTO will be flashing.
- Press SELECT until the desired function is flashing.
- Press MENU.
- The display will show:

VACUUM UNITS		
mBar	Pa	Torr

- Press SELECT until the desired units are flashing.
- Press MENU.
- The display will show:

COLLECT TEMP UNITS	
°C	°F

- Press SELECT until the desired units are flashing.
- Press MENU.
- The display will show:

REFRIG TOTAL HOUR: XXXX
SERVICE HOUR: XXXX

- To reset the SERVICE HOUR to 0 press SELECT. This allows you to keep track of the time the refrigeration system operated since it was serviced.
- The display will show the refrigeration system hours.

REFRIG TOTAL HOUR: XXXX
RESET SERVICE HOUR: ?

- To reset the service hours to 0, continue to hold SELECT 5 seconds until hours are reset.
- TOTAL HOUR cannot be reset.
- Press SELECT.
- The display will show the vacuum pump hours.

```
VACUUM TOTAL HOUR:  XXXX
      SERVICE HOUR:  XXXX
```

- To reset the SERVICE HOUR to 0, press SELECT.
- The display will show:

```
VACUUM TOTAL HOUR:  XXXX
RESET SERVICE HOUR:  ?
```

- If you want to reset the service hours to 0, continue to hold SELECT five seconds until hours are reset.

Automatic Start-Up

Turn the MAIN POWER switch ON. The refrigeration system will start and the LCD display will illuminate and read:

```
AUTO VACUUM HI mBar
WAIT COLLECTOR:  XX °C
```

If the Freeze Dryer was configured in the set up steps above to run AUTO, the vacuum pump will automatically start when the collector temperature reaches –40°C. At that point the display will read:

```
AUTO VACUUM  XXX mBar
RUN COLLECTOR:  -40°C
```

The LCD display will show the actual temperature of the collector. When the vacuum in the system is above 5 mBar, the vacuum display will indicate "HI." At 5 mBar and below, the LCD display will show a value for the actual vacuum.

Vacuum readings at high values are intended to be used solely as an indication of how the vacuum system is operating. The vacuum sensor is calibrated at the low end of the normal freeze drying range.

Manual Start-Up

Turn the MAIN POWER switch ON. The refrigeration system will start and the LCD display will illuminate and read:

If the Freeze Dryer was configured in the set up steps above to run MANUAL, the vacuum pump must be started manually by pressing the vacuum switch.

```
MANU VAC HI mBar
WAIT COLLECTOR:  XXX
```

When the collector temperature reaches –40°C the display will read:

```
MANU VAC HI mBar
READY COLLECTOR:  -40°C
```

Press the vacuum switch. The vacuum pump will start and a typical display reading will be:

```
MANU VAC 0.050 mBar
RUN COLLECTOR:  -50°C
```

The LCD display will show the actual temperature of the collector. When the vacuum in the system is above 5 mBar, the vacuum display will indicate “HI”. At 5 mBar and below, the LCD display will show a value for the actual vacuum.

Vacuum readings at high values are intended to be used solely as an indication of how the vacuum system is operating. The vacuum sensor is calibrated at the low end of the normal freeze drying range.

Pre-Freezing Samples

Appropriate containers for freeze drying include ampules, serum bottles, and wide mouth freeze drying flasks. Shell freezing of samples is recommended for wide mouth freeze drying flasks. Smaller samples in ampules and serum bottles may be frozen in a freezer. The sample container size should always be at least two to three times the sample size (i.e., 40 ml samples should be prepared in 80 ml containers or larger). The temperature required for pre-freezing is dependent on the characteristics of the sample. Pre-freezing temperature typically is at least 10° to 20°C below the eutectic or collapse temperature of the sample.

Adding Sample

The following procedure should be followed when using sample valves in the freeze dry process:

1. Pre-freeze samples. Appropriate containers for freeze drying include ampules, serum bottles, and wide mouth freeze drying flasks. Shell freezing of samples is recommended for wide mouth freeze drying flasks. Smaller samples in ampules and serum bottles may be frozen in a freezer or in the center of the collector chamber. The sample container size should always be at least two to three times the sample size (i.e., 40 ml samples should be prepared in 80 ml containers or larger).
2. Connect a pre-frozen sample to a sample valve on the drying chamber or manifold using an adapter. Turn the plastic valve knob to the "VACUUM" position to open the valve, which connects the attached sample to system vacuum. The bevel on the knob should be positioned toward the sample port to apply vacuum to the sample.

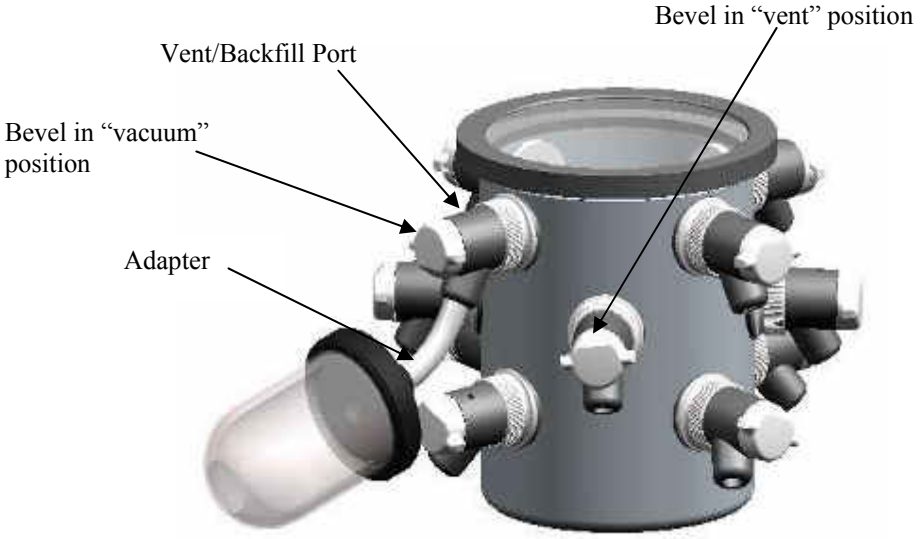

3. Before adding another sample, allow system vacuum to return to 0.133 mBar or lower. Any combination of valves and sample sizes may be utilized at one time provided that the system vacuum and collector temperature remain sufficiently low to prevent melting of the frozen sample.
4. When all the frost has disappeared from the outer surface of the sample container and no cold spots can be detected by handling the container, the sample is nearly dry. To be certain of low final moisture content, dry the sample for several hours past this point.
5. To remove a container after drying is complete, turn the plastic knob on the valve to the "VENT" position, which closes the valve and vents the container. Should backfilling with an inert gas be required, connect the gas supply line to the vent port on the valve before turning the plastic knob on the valve to vent position. The sample container may now be removed. In the vent position the bevel on the knob should point away from the sample port.
6. Ampules may be flame sealed while connected to a valve by using a sealing torch. Care must be taken not to burn the valve. An insulation material placed between the valve and the torch is recommended.

Shut Down

At the end of a run or when a sufficient amount of condensate accumulates on the collector coil to obstruct the flow of vapor to the collector chamber, the Freeze Dryer should be defrosted. First, release system vacuum by turning the plastic knob on a valve to the open position or by pulling the collector chamber drain plug out of the drain hose. Now press the Vacuum Switch on the control panel to turn the vacuum pump OFF. Turn OFF the Main Power Switch on the right hand side of the cabinet.

Defrosting

The following procedure should be followed when defrosting the collector coil:

1. Pull the collector chamber drain hose out from the left hand side of the Freeze Dryer and remove the drain plug. Place the drain hose in a suitable container to collect the condensate that will melt off the collector coil.
2. Remove the collector chamber lid and allow ambient room air to melt the ice. Dispose of the liquid appropriately.
3. Flush the collector chamber with water and wipe chamber dry.

4. If rapid defrost is desired, pour warm water over the collector coil. **Do not** allow the liquid to enter the vacuum port on the upper rear of the chamber.
5. Reinstall the drain hose plug and slide drain hose back into the side of the cabinet. Dispose of the liquid appropriately.



Utilization of acid requires immediate cleaning and neutralization after defrost or physical damage to the collector chamber and collector coil will result.

Do not attempt to chip ice from the collector coil as damage may occur to the coil.

Never attempt to start the vacuum pump when there is liquid in the collector chamber. This could result in damage to the vacuum pump.

CHAPTER 5
MAINTAINING YOUR FREEZE DRYER

Under normal operation, the Freeze Dryer requires little maintenance. The following maintenance schedule is recommended:

As needed:

1. Clean up all spills; remove liquids from the chamber.
2. Clean lid and gasket using soft cloth, sponge or chamois and a mild, non-abrasive soap or detergent.
3. Check oil level of the vacuum pump. It should be between MIN and MAX. If the oil level is less than an inch (25.4 mm) above MIN, add oil to proper level.
4. If oil shows cloudiness, particles or discoloration, drain the pump and replace with fresh oil.
5. **Utilization of acids requires immediate cleaning and neutralization after a run or physical damage to the collector chamber and collector coil will result**.
6. Check the collection chamber for condensed or frozen solvents and dispose of appropriately. Completely empty the collector chamber before the next run or before attempting to start the vacuum pump.
7. If sample valves leak vacuum or the stem becomes difficult to turn, pull the stem out of the rubber valve body and apply a thin coat of vacuum grease to the stem. Reinsert the stem into the valve body.

Monthly:

1. The rubber components on the Freeze Dryer may eventually deteriorate and require replacement. The effective life of rubber parts depends upon both their usage and the surrounding environment. Check all rubber hoses and gaskets and replace any that show signs of hardening, permanent set or deterioration.
2. Using a soft cloth, sponge or chamois and a mild, non-abrasive soap or detergent, clean the acrylic chamber lid.
3. Using a soft cloth, sponge, or chamois and a mild, non-abrasive soap or detergent, clean the exterior surfaces of the Freeze Dryer. Liquid spray cleaners and polishes may be used on the exterior surfaces. Do not use solvents to remove stains from the exterior surfaces as they may damage the finish.

Annually:

1. Every 12 months, or more often if the Freeze Dryer is operated in a dusty environment, the refrigeration system condenser should be cleaned. Using a vacuum cleaner with brush attachment, clean the condenser to ensure proper airflow for peak performance.

CHAPTER 6
TROUBLESHOOTING

Refer to the following if your Freeze Dryer fails to operate properly. If the suggested corrective actions do not solve your problem, contact Labconco for additional assistance.

Labconco Freeze Dry Systems that are clean, dry and without samples attached should reach a vacuum of 0.133 mBar within 10 minutes and should achieve an ultimate vacuum of 0.033 mBar within 18 hours when the refrigeration is operating. If the Freeze Dryer does not obtain a satisfactory vacuum, perform the following maintenance tests.

I. Vacuum Pump

First make sure that the vacuum pump operates. If it fails to operate, check the electrical connections of the Freeze Dryer to the power source and then check the electrical connection of the vacuum pump to the Freeze Dryer. If the vacuum pump has a power switch, make sure that it is turned on. If the vacuum is not adequate when the vacuum pump is operating, proceed with the following steps:

1. Check the oil and ensure it is clear and clean. If the oil looks cloudy or has any particulates, replace the pump oil. Sometimes it may be necessary to flush the pump with clean oil several times. To flush the pump, run the pump 5 to 10 minutes to allow the oil to warm up. Drain the oil and refill with clean oil. Repeat as necessary.
2. Check the oil level in the pump. Ensure it is filled to the correct level.
3. Check vacuum hose connections from the pump to the Freeze Dryer and try running the unit

If vacuum problems continue, consider obtaining a second vacuum gauge capable of reading a vacuum of 0.010 mBar. It is often useful in determining if the vacuum pump is operating properly and the vacuum sensor reading is accurate.

4. Isolate the pump by disconnecting the vacuum hose from the Freeze Dryer. Deadhead the pump by inserting the vacuum sensor from a secondary vacuum gauge into the end of the vacuum hose and observe the vacuum reading obtained. Confirm that the pump is capable of achieving an ultimate vacuum less than 0.010 mBar or approximately 10 microns. If an inadequate vacuum reading is obtained, the pump has most likely failed and may need to be replaced or rebuilt.

II. Gaskets, Tubing, Connections, Sample Valves

1. Check all sample valves on the drying chamber/manifold and ensure all valves are closed or in the vent position. Check to ensure all fittings are tight and sealed properly against the chamber. Inspect valves for cracks or cuts.
2. Inspect gasket(s) for cracks or defects. Ensure the gasket is clean. Apply a thin coat of vacuum grease to the gasket. Keep in mind too much vacuum grease can actually cause leaks.
3. Check the drain line and ensure the drain plug is installed and the tube appears to be in good condition.
4. Check all rubber vacuum tubing for signs of deterioration or cracking.
5. Check all connections and make sure they are secure and leak tight.
6. When checking the sample valves, pull as much vacuum as possible. If a vacuum indication is displayed, wiggle or rotate the valves and watch the gauge for any fluctuations. Fluctuations can indicate a potential vacuum leak. If the valve seems to be in good condition, remove the valve and apply a thin coat of vacuum grease to the stem and the outside sealing surface of the valve body, and reinstall the valve. **DO NOT APPLY VACUUM GREASE TO THE SAMPLE VALVE GASKETS, WHICH SEAL TO THE WALL OF THE DRYING CHAMBER.** If the valve still seems to be the source of the problem, remove the valve

and stopper the hole with a rubber stopper. Continue checking the other valves.

7. Make sure that the sample valve bulkhead nuts are tight. ither tighten by hand or use the wrench supplied with chambers. To use the wrench, first remove the knob and stem assembly and also the valve body. The pins on the wrench fit into the round holes of the nut. The nut should be snug, but avoid over-tightening. Replace the valve body, knob and stem.

The illustrations below show how the sample valve installs on a chamber and a manifold.

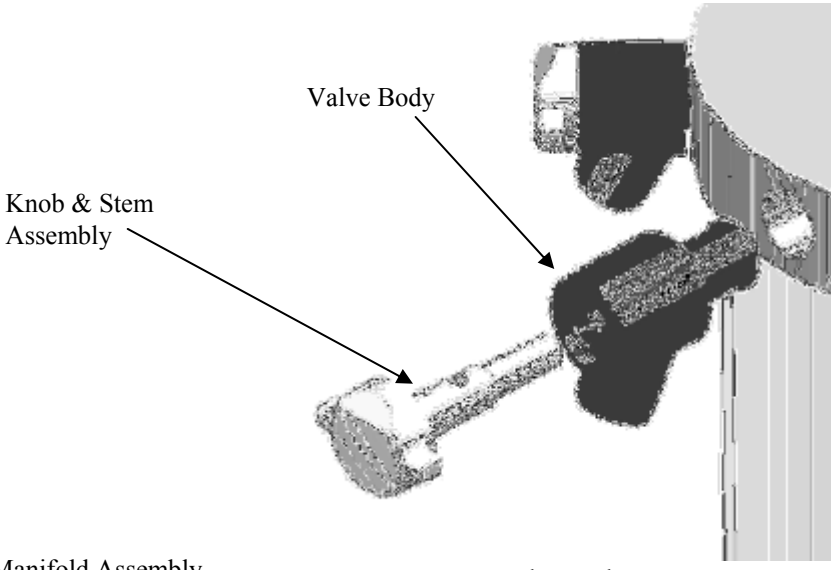

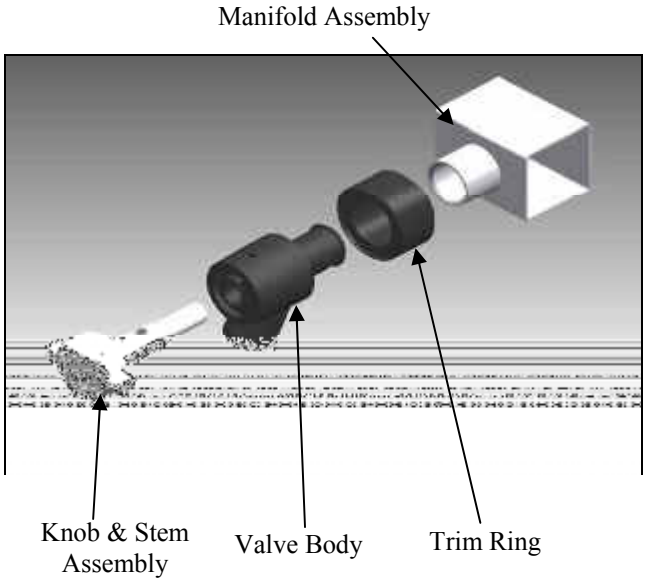

Valve Assembly (Manifold)

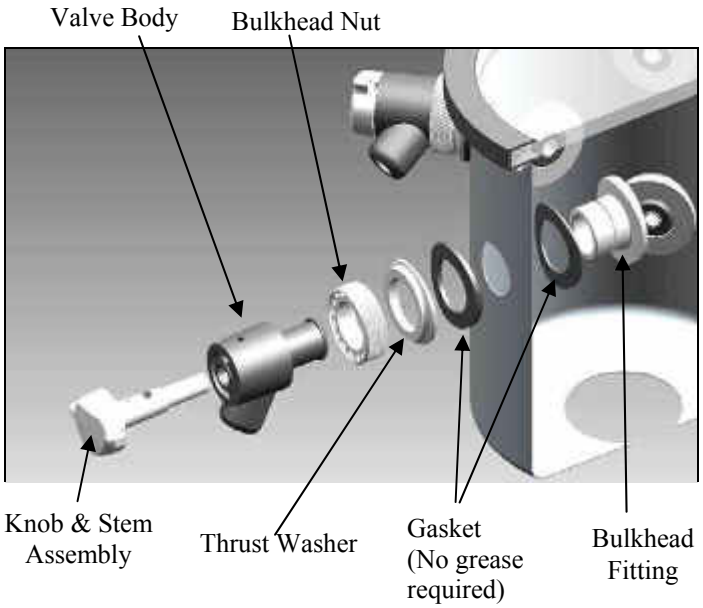

Valve Assembly (Stainless Steel Chamber)

III. System Components and Collection Chamber Isolation

This test determines if the source of a leak is in the drying chamber.

1. Remove the drying chamber or manifold.
2. Leave the gasket on and turn a large freeze dry flask upside down to cover the connection port.
3. Start the Freeze Dryer and observe the vacuum indication. If the vacuum indication is good, then the problem is in the drying chamber or manifold and you should return to *Section II, Gaskets, Tubing, Connections, Sample Valves*.

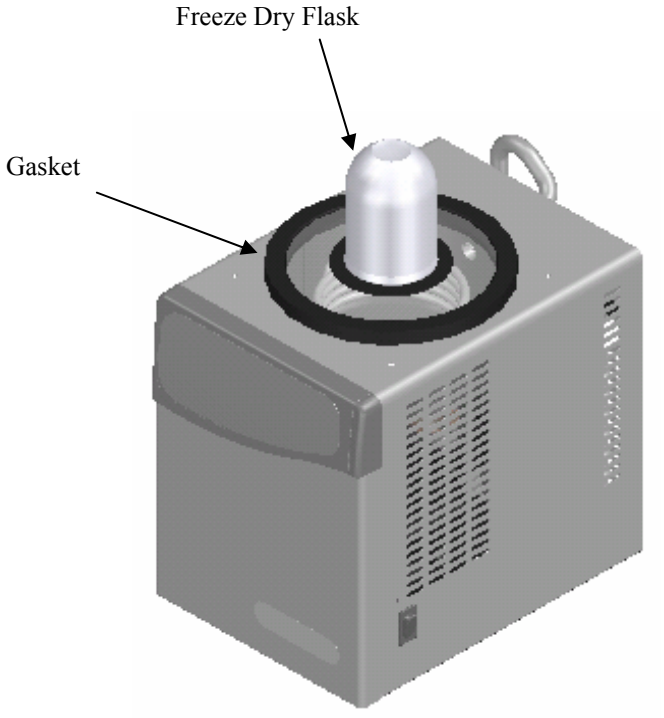

Isolating the freeze dry system from the accessory chamber/manifold

The following test determines if a vacuum leak is in the collection chamber.

1. Insert a rubber stopper in the small hole in the rear of the collector chamber.
2. Start the Freeze Dryer and observe the vacuum indication. If the vacuum is good, the problem is in the collection chamber. If it is bad, the problem is in the plumbing connections from the collection chamber to the vacuum pump.
3. If the leak is in the chamber, check the drain hose, hose connections and the drain plug.
4. If the leak is in the plumbing connections, check all rubber parts, fittings and clamps.

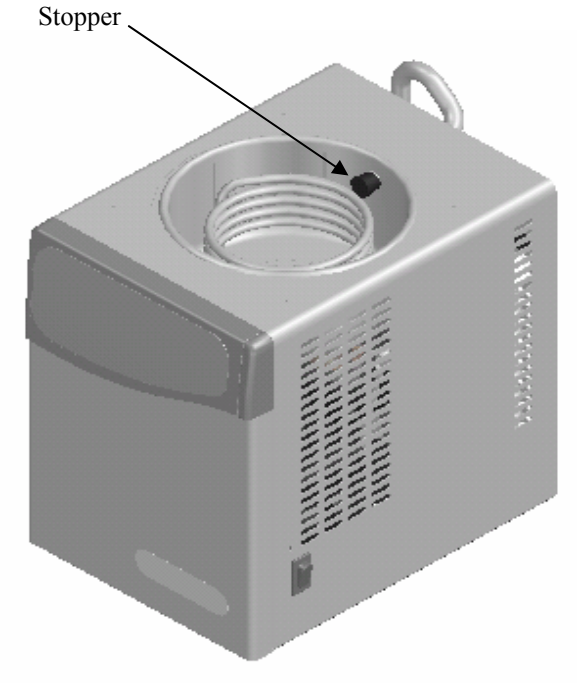

Checking the connections to the pump and the vacuum tube

Refrigeration Module Operation

Under a no-load condition, the FreeZone Freeze Dry System can achieve a collector temperature of –47°C or lower when the vacuum pump is operating, depending on ambient temperature and humidity. If the collector temperature does not reach –47°C within 40 minutes, then the refrigeration module is not functioning properly.

If any repairs are required on the refrigeration module, contact your local laboratory supply dealer. If your laboratory supply dealer is unable to provide assistance, please call Labconco. Repairs should only be undertaken by a competent refrigeration technician or through an authorized Labconco service agency.

CHAPTER 7 MODIFYING YOUR FREEZE DRYER DISPLAY

Your Freeze Dryer has been carefully calibrated and tested before shipping, however under certain circumstances it may be necessary to adjust the calibration of the temperature and/or vacuum display. Adjustments may be necessary if the Freeze Dryer requires service.

Temperature and Vacuum Display

An offset may be added to the collector temperature or vacuum display. Use an accurate traceable reference to compare the readings.

Temperature offset may be varied ±5° in 1°C increments. Vacuum offset may be varied ±0.010 mBar in 0.001 mBar increments.

Modifying the Display

Master Reset

If you want to restore all factory settings hold MENU button while turning on the power switch.
Release the MENU button when the firmware revision message appears.

This will reset:

Vacuum units to mBar
Vacuum offset to 0 mBar
Temperature units to ^C

Temperature offset to 0^C
Refrigeration total hours to 0

Vacuum pump total hours to 0
Refrigeration to operate in Manual Mode

Temperature and Vacuum Offsets

If you do not want to restore all factory settings but want to adjust offsets, press MENU and hold for approximately 10 seconds. The display will show

TEMPERATURE OFFSET:	0
VACUUM OFFSET:	0

Press SELECT until the appropriate temperature offset is shown. Each number represents 1°C.
Press VACUUM until the appropriate vacuum offset is shown. Each number represents 0.001 mBar.
Press MENU to lock in the offsets and to return to the main screen.

APPENDIX A
FREEZE DRYER
COMPONENTS

The following pages list components that are available for your Freeze Dryer. The parts shown are the most common replacement parts. If other parts are required, contact Product Service.

Item	Part No.	Description
1	7395800	Lid Gasket
2	7395801	Lid
3	7435600	Back Panel Assembly, 115V
	7435700	Back Panel Assembly, 230V
4	7953800	Motor Fan, 115V
	7953801	Motor Fan, 230V
5	7437700	Compressor, 115V, 60 Hz
	7437701	Compressor, 230V, 50 Hz
	7437702	Compressor, 230V, 60 Hz
6	1302300	Switch
7	7426500	Control Panel Label
8	7438000	Printed Circuit Board
9	7728000	Drain Plug
10	1643600	O-Ring
11	7645904	Drain Hose, Collector Chamber
12	7646000	Vacuum Hose, Vacuum Pump (Not Shown)
13	1336400	Power Cord 115V (Not Shown)
	1342100	Power Cord, 230V (Not Shown)
14	7445400	Vacuum Sensor (Not Shown)
15	7515300	Temperature Sensor, Collector (Not Shown)
16	7438100	Wire Harness, 115V (Not Shown)
	7438200	Wire Harness, 230V (Not Shown)

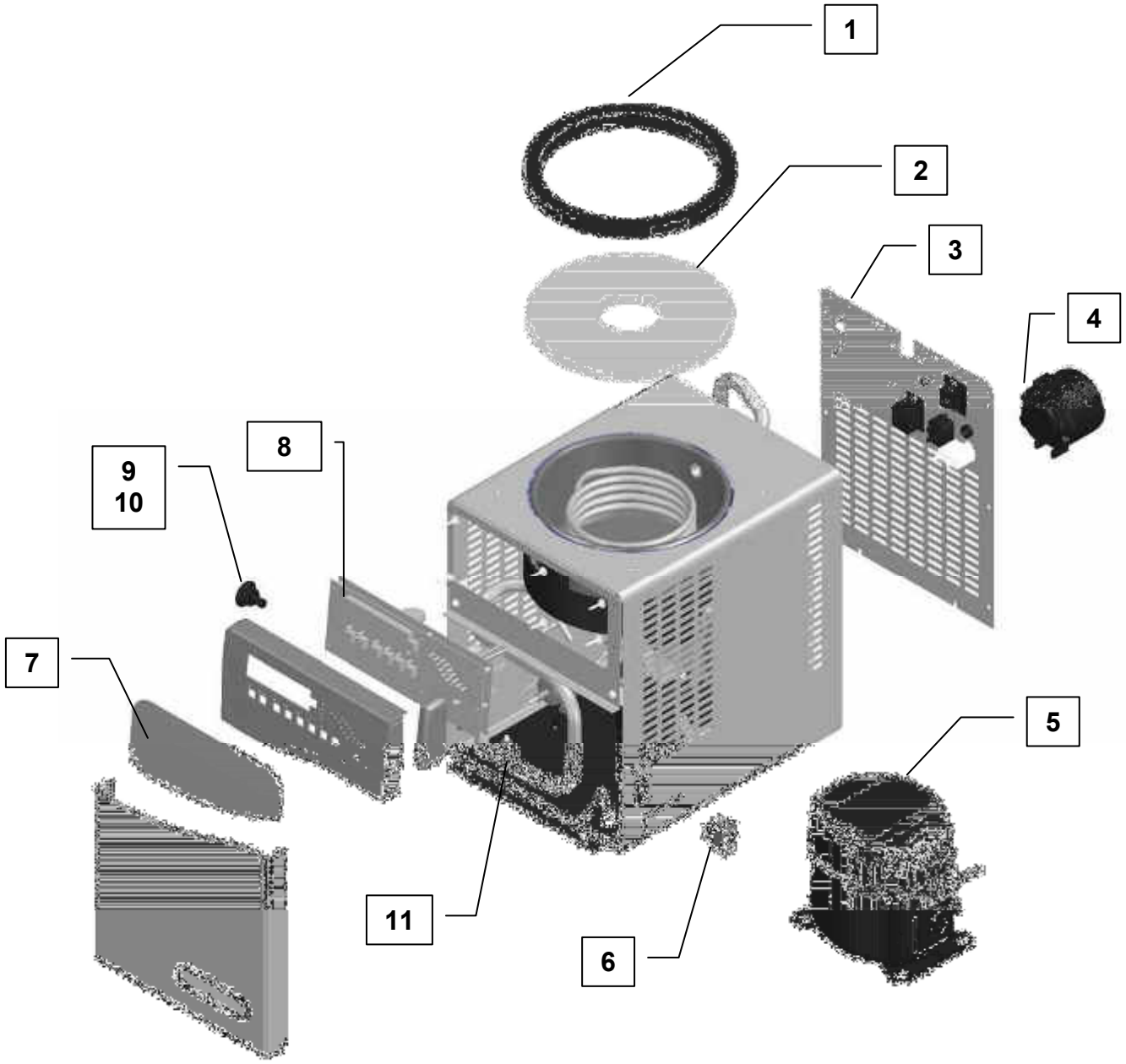
1
2
3
4
8
9
10
7
5
11
6

APPENDIX B
FREEZE DRYER
DIMENSIONS

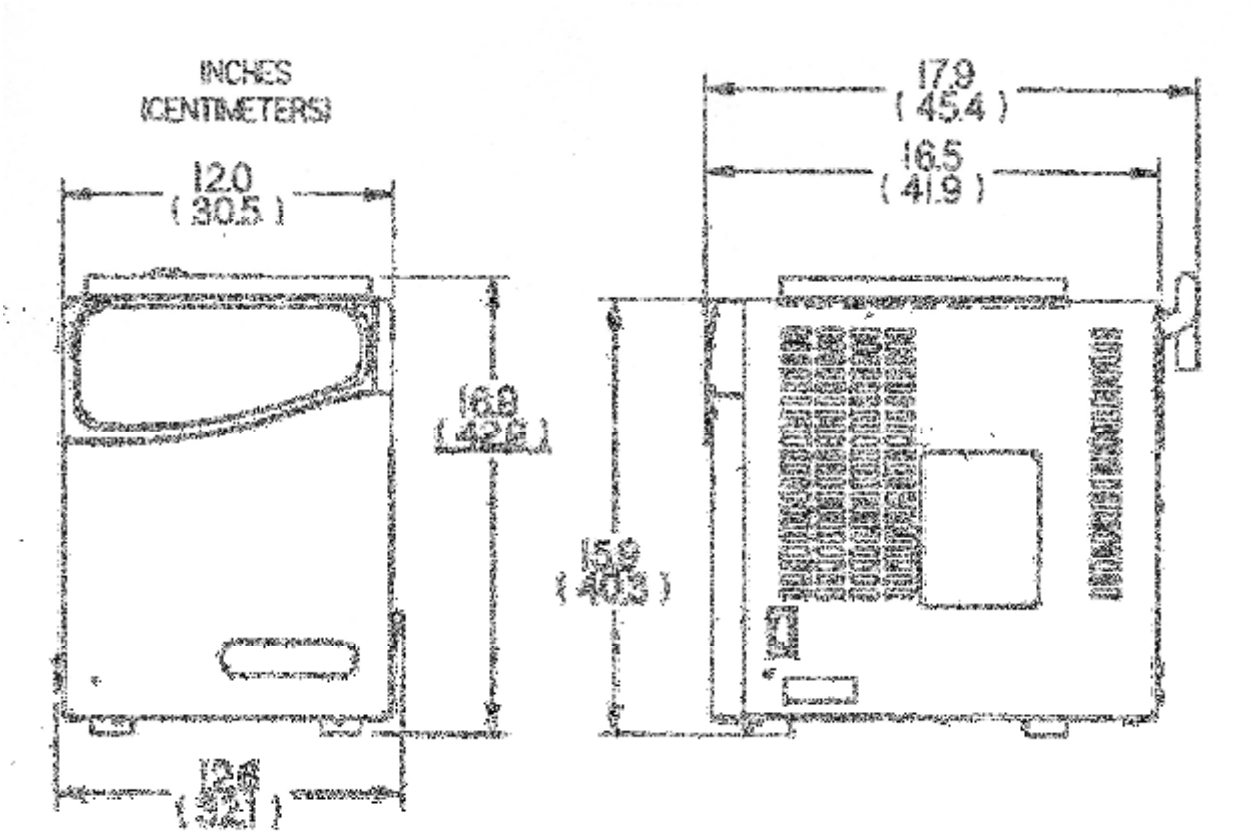

APPENDIX C
FREEZE DRYER
SPECIFICATIONS

This Appendix contains technical information about the Freeze Dryer including electrical specifications, environmental operating conditions and wiring diagrams.

Electrical Specifications

Catalog #	Voltage		Frequency	Phase	Amperage	
	Nominal	Operating Range			Nominal w/o Vacuum Pump	Max. with Vacuum Pump
7740020	115V	103-127	60	1	6	14
	100V	90-110	50	1	6	14
7740021	115V	103-127	60	1	6	14
	100V	90-110	50	1	6	14
7740030	230V	198-254	50	1	2.5	7
7740031	230V	198-254	50	1	2.5	7
7740040	230V	187-253	60	1	2.5	7
7740041	230V	187-253	60	1	2.5	7

Environmental Conditions

- Indoor use only.
- Maximum altitude: 6562 feet (2000 meters).
- Ambient temperature range: 41° to 104°F (5° to 40°C).
- Maximum relative humidity: 80% for temperatures up to 88°F (31°C), decreasing linearly to 50% relative humidity at 104°F (40°C).
- Main supply voltage fluctuations not to exceed ±10% of the nominal voltage.
- Transient overvoltages according to Installation Categories II (Overvoltage Categories per IEC 1010). Temporary voltage spikes on the AC input line that may be as high as 1500V for 115V models and 2500V for 230V models are allowed.
- Used in an environment of Pollution degrees 2 (i.e., where normally only non-conductive atmospheres are present). Occasionally, however, a temporary conductivity caused by condensation must be expected, in accordance with IEC 664.

Wiring Diagram (115V, 60 Hz Models)

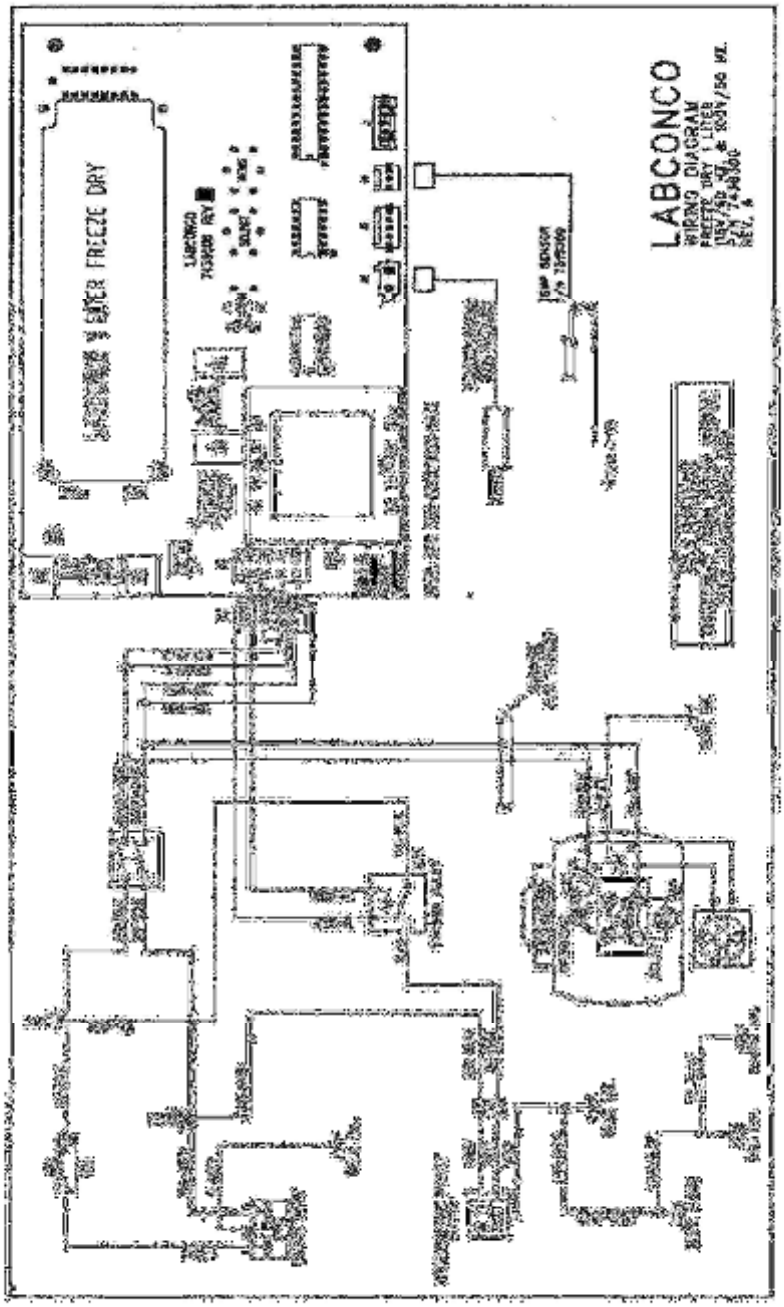

Wiring Diagram (230V, 50 or 60 Hz Models)

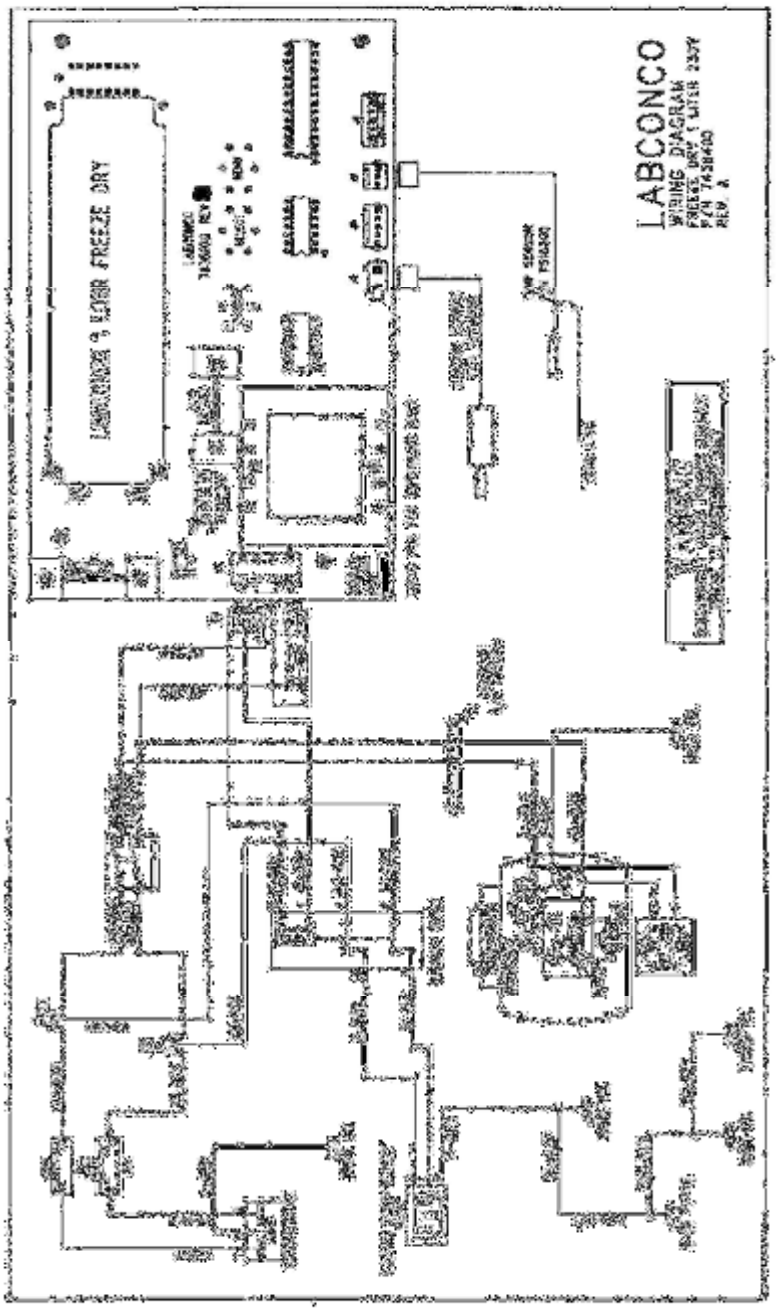

APPENDIX D
FREEZE DRYER
ACCESSORIES

The following accessories are available for the Freeze Dryer.

PART #	DESCRIPTION
1472100	**Vacuum Pump** Two stage direct drive pump, 117 liters/minute. 115 VAC, 50/60 Hz, single phase, 4.6 amps. Includes Pump Exhaust Filter 1473400. (Cat. # 1473400)
7739402	**Vacuum Pump** Two stage direct drive pump, 117 liters/minute. 230 VAC, 50/60 Hz, single phase, 2.4 amps. Includes Pump Exhaust Filter 1473400. (Cat. #1473400)
7438700	**Vacuum Pump** Two stage direct drive pump, 108 liters/minute. 115 VAC, 50/60 Hz, single phase. Includes Pump Exhaust Filter. (Cat. # 7670400)
7438800	**Vacuum Pump** Two stage direct drive pump, 108 liters/minute. 230 VAC, 50/60 Hz, single phase. Includes Pump Exhaust Filter. (Cat. # 7670400)
7769600	**Vacuum Pump Chemical Resistant** Two stage direct drive pump, 173 liters/minute. 115 VAC, 50/60 Hz, single phase. Includes Pump Exhaust Filter. (Cat. # 7670400)
7769800	**Vacuum Pump chemical Resistant** Two stage direct drive pump, 173 liters/minute. 230 VAC, 50/60 Hz, single phase. Includes Pump Exhaust Filter. (Cat. # 7670400)

PART #	DESCRIPTION
1472200	**Pump Inlet Filter** Disposable filter that prevents oil back streaming and protects vacuum pump from submicron particles. Fits vacuum pumps 1472100 and 7739402.
1473400	**Pump Exhaust Filter** Disposable filter that removes visible oil mist and odor from vacuum pump exhaust. Fits vacuum pumps 1472100 and 7739402.
1473200	**Replacement Element, Oil Mist, Pump Exhaust Filter** Fits pump exhaust filter 1473400.
1473300	**Replacement Element, Odor, Pump Exhaust Filter, package of 5** Fits pump exhaust filter 1473400 or vacuum pumps 1472100 and 7739402.
7438600	**Replacement Filter – Element** Fits vacuum pumps 7438700 and 7438800
1988000	**Vacuum Pump Oil, 1 Liter** A molecularly distilled hydrocarbon oil with low vapor pressure. For vacuum pumps 1472100 and 7739402
7772000	**Soda Acid Trap** Secondary trap that prevents migration of corrosive chemicals into vacuum pump.
7772100	**Replacement Media for Soda Acid Trap**
7772700	**Vacuum Pump Oil, 1 Liter** A mineral oil with low vapor pressure. For vacuum pumps 7438700, 7438800, 7769600, 7769800

PART #	DESCRIPTION
7772500	**Carbon Solvent Trap** Secondary trap that prevents migration of organic solvents into vacuum pump.
7772600	**Replacement Activated Carbon Media for Carbon Solvent Trap**
7538000	**Secondary Vacuum cold Trap** Provides additional protection for the vacuum pump when processing low eutectic samples 9-3/4" high x 7-7/8" diameter, and 304 stainless steel with 3/4" vacuum connections. For use with dry ice & solvent. Cools to approximately –75°C
7522800	**12 Port Drying Chamber** 9 ¾" high x 7 7/8" diameter, 304 stainless steel with 12 freeze dry valves.
7521000	**Heated Drying Chamber** 10 ½" high x 9" diameter type 304 stainless steel. The 3 shelf product heaters heat to 43°C (110°F). 115V
7521001	**Heated Drying Chamber** 10 ½" high x 9" diameter type 304 stainless steel. The 3 shelf product heaters heat to 43°C (110°F). 230V
7509200	**Product Heater** For use in chamber 7522800. Provides 3 heated shelves operating at 43°C (110°F). 115V
7509201	**Product Heater** For use in chamber 7522800. Provides 3 heated shelves operating at 43°C (110°F). 230V
7443500	**Clear Drying Chamber with 8 Valves** For bulk drying or drying in flasks
7442100	**Drying Rack – Unheated** Provides 3 shelves. For use in chambers 7443500 and 7522800
7442400	**Clear Drying Chamber** For bulk drying

PART #	DESCRIPTION
7522300	**20 Port Manifold** 10" high x 27 ½" wide x 8 5/8" deep. Type 304 stainless steel manifold with 20 freeze dry valves.
7868500	**48 Port Ampule Manifold** 28 5/8" high x 5" wide x 5" deep. Type 304 stainless steel with 48 each ¼" tube stems.
7509600	**Sample Valve Kit** Includes neoprene valve body, knob and installation parts.
7522900	**16 Port Chamber** 13" high x 138" diameter, 304 stainless steel with 16 freeze dry valves.

Fast-Freeze® Flasks



Fast-Freeze Flasks are specially designed to be easier to handle, faster to load and more convenient to use than other freeze dry glassware now in your laboratory. Compatible with all major brands of laboratory freeze dry equipment, Fast-Freeze Flasks eliminate the risk of contamination from vacuum grease, reduce spillage of valuable samples and require no washers, gaskets or retainers.

How to select Fast-Freeze Flasks for your Freeze Dry System

Select Fast-Freeze Flasks based on your sample sizes. Flasks should be filled no more than one-third of their volume so that maximum surface area is achieved and efficient lyophilization is assured. A complete Fast-Freeze Flask includes a rubber top, glass bottom and a supply of filter paper. Tops, bottoms and filter paper are available separately as replacement components. Adapters are required to attach flasks to freeze dry valve ports.

Flask Size	Complete Flask	Flask Bottom	Flask Top	Flask Top Adapter Diameter*	Dimensions/ Flask Bottom H x D
40 ml	7540000	7542000	7544000	1/2"	76 mm x 34 mm
80 ml	7540200	7542200	7544000	1/2"	115 mm x 34 mm
120 ml	7540300	7542300	75442-00	3/4"	68 mm x 59.2 mm
150 ml	7540400	7542400	7544200	3/4"	85 mm x 59.2 mm
300 ml	7540600	7542600	7544200	3/4"	145 mm x 59.2 mm
600 ml	7540800	7542800	7544400	3/4"	135 mm x 90.2 mm
900 ml	7540900	7542900	7544400	3/4"	190 mm x 90.2 mm
1200 ml	7541000	7543000	7544400	3/4"	240 mm x 90.2 mm
2000 ml	7541200	7543200	7544400	3/4"	380 mm x 90.2 mm

**Valves on the freeze dry systems, drying chambers and manifolds offered in this catalog fit adapters of both 1/2" and 3/4" sizes. Size information is provided for selecting adapters for older Labconco models and other freeze dryers.*

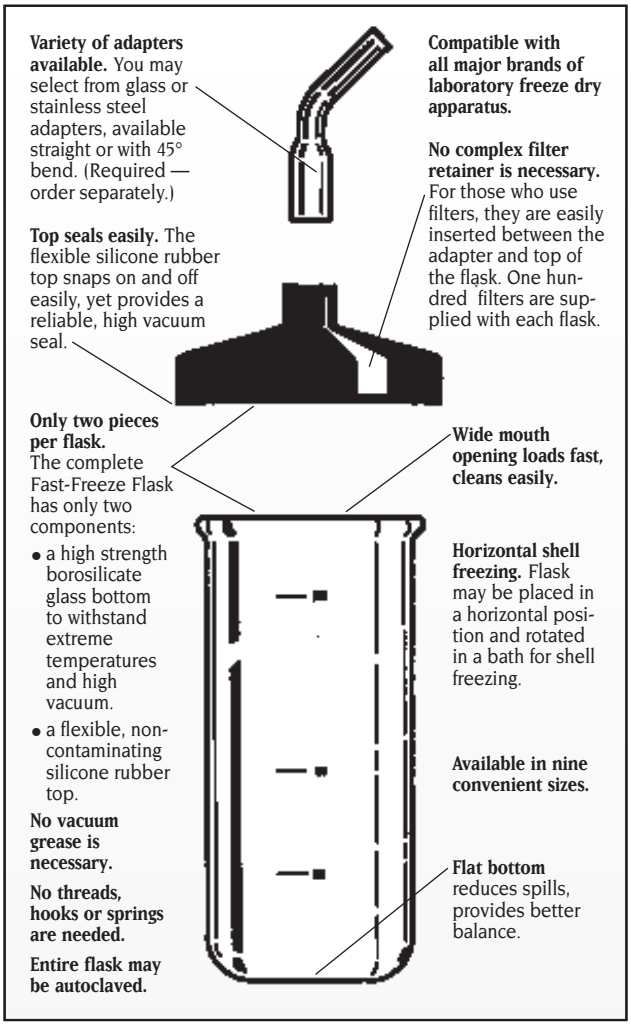

Adapters

Add the Adapters for connecting the Fast-Freeze Flasks to the valve ports on your drying chamber or manifold. Choose borosilicate glass or stainless steel adapters in 1/2" and 3/4" diameters.

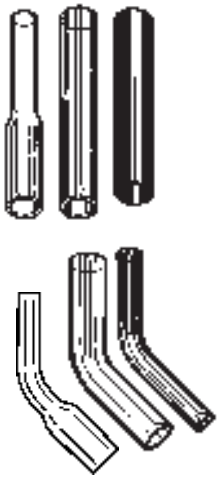

Diameter	Straight Adapter	45° Bend Adapter
Borosilicate Glass		
1/2" flask top to 1/2" valve*	7545000	7545600
3/4" flask top to 3/4" valve*	7545200	7545800
1/2" flask top to 3/4" valve*	7545400	7546000
3/4" flask top to 1/2" valve*	7545400	7546000
Stainless Steel		
1/2" flask top to 1/2" valve*	7547000	7547400
3/4" flask top to 3/4" valve*	7547200	7547600

7544810 Replacement Filter Paper
1000 (10 packages of 100). 1" diameter (28mm). Pore size 17 microns. Shipping weight 0.5 lb.

Lyph-Lock® Flasks



Lyph-Lock Flasks simplify your lyophilization procedures because they have only three pieces per flask — a high strength borosilicate glass top and bottom with a silicone rubber ring seal. The unique wide-mouth design helps you load samples easily and lyophilize efficiently.

How to select Lyph-Lock Flasks for your Freeze Dry System

Select the Lyph-Lock Flasks based on your sample sizes. Flasks should be filled to no more than one-third of their volume so that maximum surface area is achieved and efficient lyophilization is ensured. A complete Lyph-Lock Flask includes a glass top and bottom and a rubber ring seal. Tops, bottoms and seals are available separately as replacement components. Adapters are required to attach flasks to freeze dry valve ports.

Flask Size	Complete Flask 19/38 STJ	Complete Flask 24/40 STJ	Flask Top 19/38 STJ	Flask Top 20/40 STJ	Lyph-Lock Seal	Flask Bottom	Dimensions Flask Bottom H x ID
25 ml	7550000	7554000	7552000	7556000	75590-00	75570-00	37 mm x 34 mm
50 ml	7550200	7554200	7552000	7556000	7559000	7557200	67 mm x 34 mm
100 ml	7550400	7554400	7552200	7556200	7559200	7557400	50 mm x 59.2 mm
250 ml	7550600	7554600	7552200	7556200	7559200	7557600	110 mm x 59.2 mm
500 ml	7550800	7554800	7552400	7556400	7559400	7557800	103 mm x 90.2 mm
750 ml	7550900	7554900	7552400	7556400	7559400	7557900	145 mm x 90.2 mm
1000 ml	7551000	7555000	7552400	7556400	7559400	7558000	187 mm x 90.2 mm

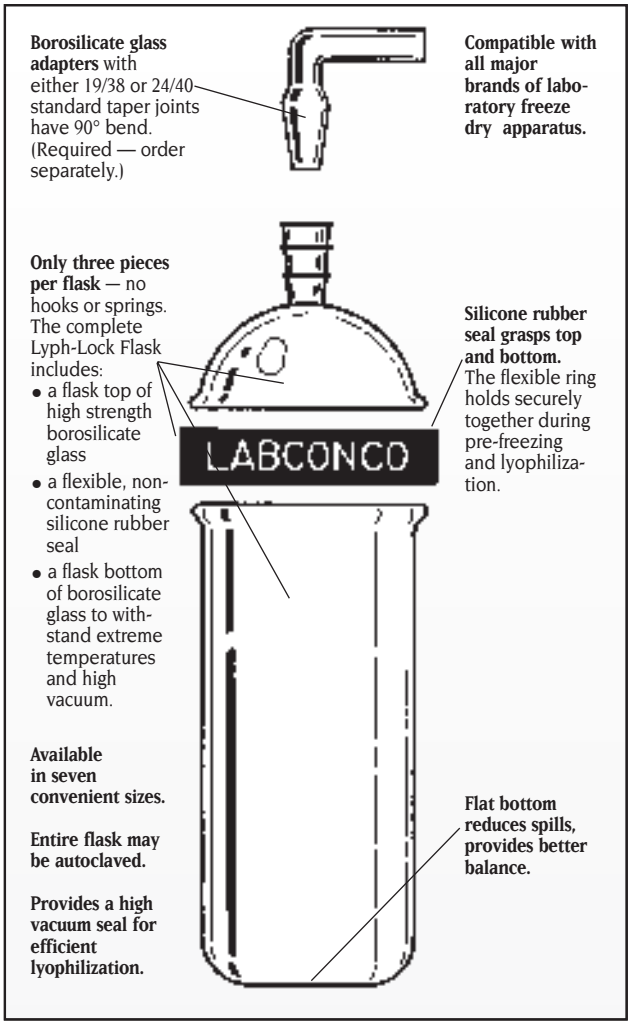

Adapters

Add the Adapters for connecting the Lyph-Lock Flasks to the valve ports on your drying chamber or manifold.

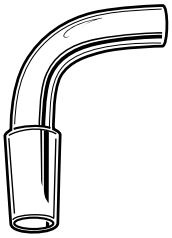

90° Bend Adapter	Description
7568000	Connects 19/38 STJ Flask Top to 1/2" valve*
7568200	Connects 19/38 STJ Flask Top to 3/4" valve*
7568400	Connects 24/40 STJ Flask Top to 1/2" valve*
7568600	Connects 24/40 STJ Flask Top to 3/4" valve*

**Valves on the freeze dry systems, drying chambers and manifolds offered in this catalog fit adapters of both 1/2" and 3/4" sizes. Size information is provided for selecting adapters for older Labconco models and other freeze dryers.*

Serum Bottles and Vials



Perfect for long term storage of freeze dried samples. Labconco Serum Bottles and Threaded Vials are specifically designed for lyophilization applications. Their uniform thin wall construction ensures even freezing and drying. Bottles and vials are ideal containers for use in the FreeZone Stoppering Tray Dryer. Serum bottles also connect to valve ports on drying chambers and manifolds.

Serum Bottles

Serum Bottles, Stoppers and Seals are supplied in packages of 100.



Size	20 mm Corkage	13 mm Corkage	Split Stoppers	Aluminum Seals	Sleeve-Type Stoppers
2 ml		7575010	7576010	7577010	
3 ml		7575210	7576010	7577010	
5 ml	7573010		7576210	7577110	7577510
10 ml	7573210		7576210	7577110	7577510
20 ml	7573410		7576210	7577110	7577510
30 ml	7573610		7576210	7577110	7577510
50 ml	7573810		7576210	7577110	7577510
100 ml	7574010		7576210	7577110	7577510
125 ml	7574210		7576210	7577110	7577510

Threaded Vials

Stoppers and Threaded Vials with Screw Caps are supplied in packages of 200.



Size	Vials with Screw Caps	Stoppers
5 ml	7762300	7762200
10 ml	7762600	7762200

Accessories



Seal Crimper

Secures tear-away Aluminum Seals.

7578000 Seal Crimper for 13 mm corkage.
Shipping weight 3 lbs. (1.4 kg).
7578100 Seal Crimper for 20 mm corkage.
Shipping weight 3 lbs. (1.4 kg).

Vacuum Stoppering Adapter

7593000 Adapter connects to valve ports for manual stoppering of 20 mm corkage serum bottles under original vacuum. The stopper and serum bottle are inserted into the adapter body and lyophilization begins. After the process is completed, the researcher slides the stopper into position so when the valve is turned from vacuum to vent the serum bottle is tightly sealed by the stopper. The ejector tube is then used to force the serum bottle out of the adapter.
Shipping weight 1 lb. (0.4 kg).

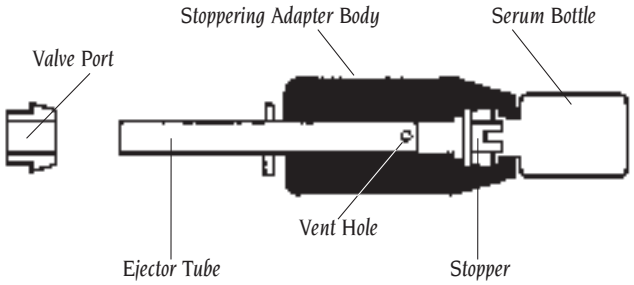

Ampules

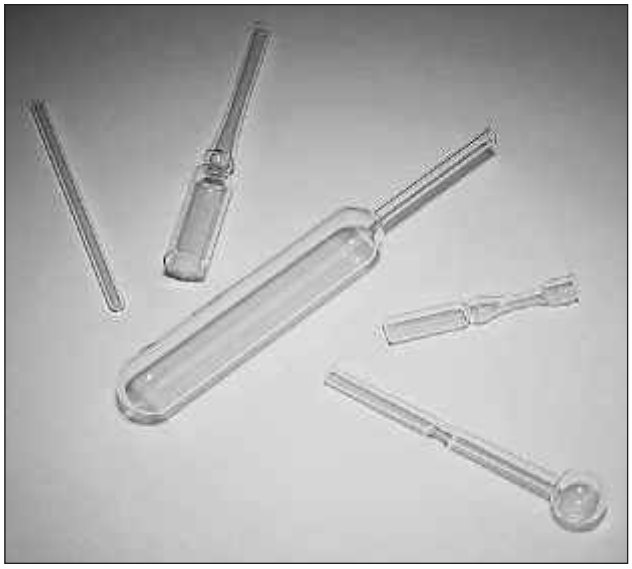

Labconco Ampules are fabricated of highest quality borosilicate glass for strength and durability. They are available in five different configurations to provide the ideal ampule for your specific lyophilization requirements, from tray drying to flame sealing applications.

Ampules

Ampules are supplied in packages of 100.

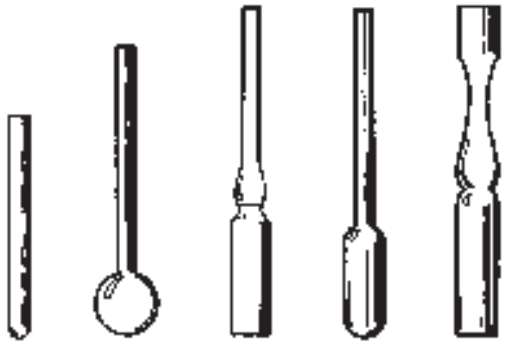

Size	Straight	Bulb-Type	Pre-Scored Flat Bottom	Round Bottom	Stoppering
1 ml	7572710	7570010	7570610		
2 ml			7570810		7572310
4 ml	7572810				
5 ml		7570210	7571010		
10 ml			7571210	7571610	
25 ml				7571810	
50 ml				7572010	

Accessories



Oxygen/Natural Gas Sealing Torch

7578500 Torch specifically designed for flame sealing freeze dry ampules. Seals all types of heat-resistant glass. Connects to natural gas, butane or propane and oxygen with 1/4" ID hose connectors. Shipping weight 3 lbs. (1.4 kg).



Ampule Valve Adapters

7593401 Adapter connects ampules to valve ports or stainless steel stems. Ten per package. Shipping weight 0.5 lb. (0.2 kg).



Stoppers

7572510 Stopper for Stoppering Ampules 75723-10. 100 per package. Shipping weight 3 lbs. (1.4 kg).



Trident Adapter

7762700 Three Way Adapter permits attachment of three ampules to a single valve port. Ampules are attached using Ampule Valve Adapters or 1/8" surgical tubing (not provided). Cavity in adapter body can be filled with cotton fiber media to help prevent contamination between samples. Shipping weight 3 oz. (0.1 kg).

DECLARATION OF CONFORMITY

Application Council Directive(s): 73/23/EEC, 89/336/EEC

Standard(s) to which conformity is declared: EN61010, EN55022, EN50082-1

Manufacturer's Name:	Labconco Corporation
Manufacturer's Address:	8811 Prospect Avenue Kansas City, MO 64132 USA
Importer's Name:	See Shipping/Customs Documents*
Importer's Address:	See Shipping/Customs Documents for your equipment
Type of Equipment:	Laboratory Equipment – Freeze Dryer
Model No.:	775 followed by two digit number based on model size; followed by another two digit number based on options. 77400 followed by two digit number based on options. 79340 followed by two digit number based on options. 767 followed by two digit number based on model size; followed by another two digit number based on options. 79600 followed by two digit number based on options. 742001 followed by two digit number based on options.
Serial No.:	Various – See Individual Declaration

Year of Manufacture: 1995 and Subsequent

I, the undersigned, hereby declare that the equipment specified above conforms to the above Directive(s) and Standard(s).

See individual Declaration of Conformity which will be signed by the importer for your country.

Place: _____

(Signature)

Date: _____

(Full Name)

_____

(Position)

*An individual version of this declaration is included with your shipping/customs documentation.

Labconco P/N 26960-02, Rev. E, ECO C010