Tools and Hardware
Catalog Data
CA325006EN

Effective January 2017
Supersedes January 2016

COOPER POWER SERIES

Kearney™ Compression Tools, Cutters, and Accessories





Contents

HAND-OPERATED MECHANICAL TOOLS 2
Fixed die type "OS" tools 2
Fixed/Insertable Die Type "O" Tools 3
Fixed Die Type O-68 and O-65 Tools 3
Fixed die type O-66 tool 4
Compression dies for type "O" tools 5

POWER-OPERATED REMOTE HYDRAULIC TOOLS 6
4,000 psi type PH13 compression tool 6
12-ton tool die adapter 7

CUTTERS 8
Compact electric cable cutter 8
Compact ratcheting cable cutter 8
ACSR wire rope and cable cutter 9
Shear-type hand operated cutters 9
Ratchet-type soft cable cutter 10
Ratchet-type hard cable cutter 10
Ratchet-type guy strand cutter 11
Ratchet-type wire rope cutter 11
General purpose center cut cutters 12
Heavy-duty cutters 12

KEARNEY DIE REFERENCE TABLE 13

Powering Business Worldwide

Hand-operated mechanical tools

Fixed die type "OS" tools

Residential service connections can be quickly and reliably made with these lightweight and compact fixed die tools. The tool is available with a choice of two dies for compressing 5/8" diameter bare and insulated Serv-ens™ connectors, triplex sleeves and URD connectors. The OS-620 has the added benefit of providing a Non-Bow™ crimp.

The bent handle design imparts a mechanical advantage. The powerful jaw mechanism follows the design principle of the larger type "O" Tool.

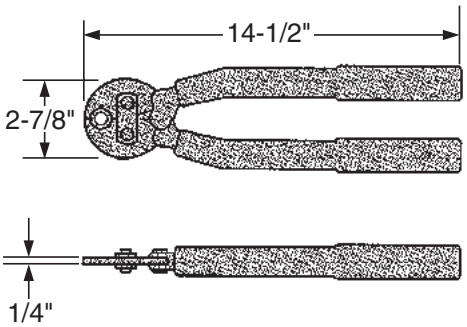

Figure 1. Residential service connector "OS" Tool

Table 1. Ordering Information

Description	Crimp Diameter	Catalog Number	Net Wt. Each
5/8" Fixed Die	5/8"	OS50	2 lbs
620 Fixed Die	5/8"	OS-620	2 lbs.



Figure 2. Tool Application: useable on any non-tension sleeve with 5/8" O.D. Catalog number OS50 shown

Fixed/Insertable Die Type "O" Tools

Almost all distribution connections can be made with lightweight, low cost type "O" Tools. Wide connection versatility is provided by interchangeable insert dies. Minimal effort to achieve compression is accomplished through the placing of individual die inserts close to the fulcrum. Accepts patented Kearney™ Non-Bow™ Dies.

A fixed nose die provides extra convenience when installing Serv-ens™ connectors and Triplex neutral sleeves.

Powerful, rugged type "O" tools are engineered around the basic design of the bolt cutter. The jaws are forged steel, heat treated and hardened for high strength. Bolts are manufactured from heat treated material and are encased in sleeve bearings to greatly reduce wear and subsequent need for future tool adjustment.

Type "O" tools have fiberglass handles, to extend operating flexibility across all connection locations. Two handle configurations are available – straight and bent.

Matched Kearney "O" tool die sets are easily inserted and remain locked securely in place during use. All die sizes are clearly marked on each die.

The use of Kearney patented Non-Bow dies is recommended when installing full tension, single ACSR sleeves.

All type "O" tools are now supplied with stainless steel pins to accept Burndy® type "W" dies, when a Kearney "D" die is inserted in the cavity.

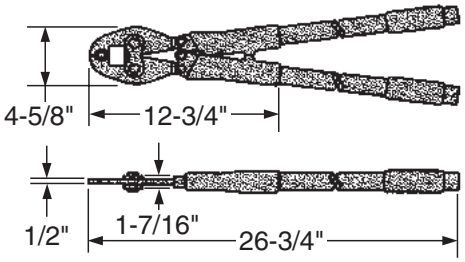

The above dimensions are for a tool with a 17" handle. Add 4" to the overall length for a 21" handle.



Figure 3. Insertable dies enable user to mechanically crimp connectors on cable up to 4/0 ACSR

Fixed Die Type O-68 and O-65 Tools

The O-68 and O-65 Tools have two fixed dies. No insertable dies are required when crimping Squeezon® connectors in the seven connector program. These tools incorporate the same features as the other type "O" Tools. These tools will also accept Burndy® type "W" dies.

O-60 design and operating specifications

- Wire ranges: Thru 4/0 ACSR (350 kcmil one hole aluminum terminals)
- Die sizes: See Table 4 on page 5
- Output force developed: Up to 9800 lbs.
- Hand operated
- Tool weight: 5-3/4 lbs
- Head material: Forged tool steel
- Bolt material: Tool steel
- Special material processing: Heat treated
- Special variations:
  - O-62 fixed 5/8" die for 5/8" Serv-ens connectors and triplex sleeves
  - O-620 fixed "620" Non-Bow Die for 5/8" connectors
  - O-63 fixed "O" die for "O" size Squeezon connectors
  - O-65 fixed 5/8" and "D" dies
  - O-66 fixed "B" and "K" dies
  - O-68 fixed "O" and "D" dies
  - 17" or 21" handles
  - Bent handles
  - Insulated head

Accessories available

- Die cases
- Carrying case
- Insulating boot
- Wire cutting dies



Figure 4. Bent handle reduces spread in open position and improves compression advantage

Table 2. Type O-60 Mechanical Tools

Description	Catalog Numbers				
	5/8" Fixed Nose Die*	"O" Fixed Nose Die*	620 Fixed Nose Die*	Fixed 5/8" & "D"	Fixed "O" & "D"
17" Straight Handles, Non-Insulated Head	O-62F	O-63F	O-620F	O-65FB	O-68FB
17" Straight Handles, Insulated Head	O-62-3F	O-63-3F	O-620-3F	O-65-3FB	O-68-3FB
21" Straight Handles, Non-Insulated Head	O-62-21F	O-63-21F	O-620-21F	O-65-21FB	O-68-21FB
21" Straight Handles, Insulated Head	O-62-22F	O-63-22F	O-620-22F	O-65-22FB	O-68-22FB
17" Bent Handles, Non-Insulated Head	O-62-50F	O-63-50F	O-620-50F	O-65-50FB	O-68-50FB
17" Bent Handles, Insulated Head	O-62-53F	O-63-53F	O-620-53F	O-65-53FB	O-68-53FB
21" Bent Handles, Non-Insulated	O-62-10F				
21" Bent Handles, Insulated	O-62-13F				

* If tool is to be supplied with a set of "D" dies, add suffix "B" to O-62, O-63 and O-620 tool part numbers i.e. O-62FB.

Fixed die type O-66 tool

The O-66 tool is designed to install copper connectors that require industry standard "B" and "K" dies. It features both die profiles machined directly into the jaw, thus providing improved durability for application versatility in overhead and underground installations. The O-66 tool is supplied with either straight or bent fiberglass handles.

Table 3. Type O-66 Mechanical Tools

Catalog Number	Description	Weight	Length
O-66F	17" Straight Handles, Non-Insulated Head	6 lbs.	28"
O-66-3F	17" Straight Handles, Insulated Head	6 lbs.	28"
O-66-21F	21" Straight Handles, Non-Insulated Head	7 lbs.	32"
O-66-22F	21" Straight Handles, Insulated Head	7 lbs.	32"
O-66-50F	17" Bent Handles, Non-Insulated Head	7 lbs.	28"
O-66-53F	17" Bent Handles, Insulated Head	7 lbs.	28"



Figure 5. O-66 Tool



Figure 6. Insert dies are locked into rectangular seats by spring-loaded locking pins

Compression dies for type "O" tools

Non-Bow Dies have a hexagonal configuration to eliminate bending of one-piece full-tension sleeves for #4, #2, and 1/0 ACSR. This is an exclusive Kearney patented die design and incorporates wider die lands, resulting in fewer indents per sleeve.

Table 4. Compression Dies for Type "O" Tools

Die Size	Catalog Number	Net Wt. Each	Die Size	Catalog Number	Net Wt. Each
B	30554CPS	3 oz.	**Non-Bow Dies (Hex)**		
D	26994		500	100625CPS	3 oz.
J	48410		510	100600CPS	
K	40495CPS		620	100613	
O	26993		635	100601	
P	30611CPS		702	100618CPS	
T	40493CPS		747	100602	
737	30084	3 oz.	845	100609	
781	30450		980	100606	
840	30124		**EEI Dies**		
3/16	36181CPS	3 oz.	7A	100603-7	3 oz.
1/4	30154		9A	100603-9	
5/16	30043		11A	100603-11	
3/8	30042		**Other Dies and Accessories**		
1/2	30041		BU-C	30744	3 oz.
9/16	26958		Orange*	49341	
19/32	30914		Plum*	36559	
5/8-1	26992CPS		**Wire Cutter Dies**		
11/16	40114CPS		For 2/0 ACSR Max.	30500CPS	3 oz.

The following are Non-Bow equivalents of standard dies:
737 –> 747; 840 –> 845; 1/2 –> 500; 5/8-1 –> 620

*Nicopress die designation

Table 5. O-Tool Accessories

For Tool Model	Description	Catalog Number	Net Wt. Each
O-60 Series	Die Case	30642CPS	1 lb.
	Insulating Boot	107749-S6	0.25 lb
	Die Holder Replacement Kit	106480	0.25 lb
	Burndy® Die Holder and Replacement Kit	107418	0.25 lb



Figure 7. Insertable O-tool die



Figure 8. Insulating boot



Figure 9. Burndy® die holders



Figure 10. Die case (#30642CPS)

Power-operated remote hydraulic tools

4,000 psi type PH13 compression tool

The PH13 tool features the same 1 1/2" jaw opening between dies as the previous hand hydraulic WH3 tool. The PH13 tool accommodates all existing WH2 and WH3 dies.

Features and benefits

- Large jaw opening of 1 1/2" between dies allows work on very large connectors
- Accommodates all existing WH2 and WH3 dies, and die adapters for "U" dies or WH1 dies
- Lightweight design is easy to handle

PH13 design and operating specifications

- Wire ranges:
  - Tension fittings through 477 26/7 ACSR
  - Terminals through 1033 kcmil Stranded
- Die Sizes: See Table 7
- Output force developed: 24,000 pounds nominal
- Tool weight: 9 lbs.
- Energized line use: Yes
- Heat treated forged tool steel head
- Ram travel: 1 9/16"
- Accessories available:
  - Squeezon connector cut-off blade
- Tool comes standard with male fitting

Table 6. Ordering Information

Description	Catalog No.	Net Wt. Each
Power Operated Tool (4,000 psi)	KPH13-4	14-1/2 lbs.
Power Operated Tool with Carrying Case (4,000 psi)	PH13-4	19-1/2lbs.

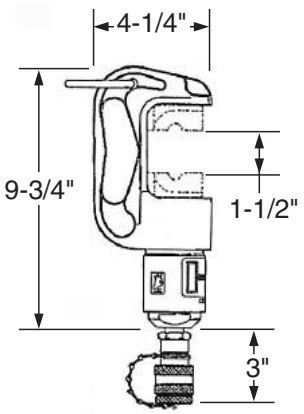

Figure 11. Dimensions



Figure 12. PH13 compression tool

Table 7. Dies for 12-ton WH2, WH3, BH4, WH4, PH2, and PH13 Tools

Die Size	Catalog Number	Net Wt. Each
B-K-T	36832CPS+	1 lb.
C	36830CPS	1 lb.
D	36457	1 lb.
N	36459CPS**	1 lb.
O	36467+	1 lb.
P	36828CPS+	1 lb.
U	36472	1 lb.
510	36838+	1 lb.
572	36836+	1 lb.
635	36482CPS+	1 lb.
727	40063+	1 lb.
737	36480+	1 lb.
747	36834CPS	1 lb.
781	36478+	1 lb.
840	36476+	1 lb.
1/4	36498+	1 lb.
5/16	36496+	1 lb.
3/8	36494CPS+	1 lb.
1/2	36490CPS+	1 lb.
9/16	36488+	1 lb.
19/32	36486CPS+	1 lb.
5/8-1	36484CPS+	1 lb.
11/16	40151CPS+	1 lb.
15/16	36474+	1 lb.
3/4 (Hex)	49435+	1 lb.
29/32 (Hex)	49437+	1 lb.
15/16 (Hex)	100370CPS	1 lb.
1- 2 (Hex)	100399	1 lb.
1 1/8-1 (Hex)	36463	1 lb.
1 1/8-2 (Hex)	100400	1 lb.
1 1/4 (Hex)	40517	1 lb.
1 5/16 (Hex)	100433CPS	1 lb.
1 1/2 (Hex)	100434CPS	1 lb.
9/16 Wide	100455	1 lb
840 Wide	100456	1 lb.
Adapters		
U die	3756	6 oz.
WH1	100096-W1	6 oz.

\+ May be used with adapter No. 100096CPS in PH3, PH4, PH14, PH15 and RH15 tools.
** For WH3 tools, use 36459-3 die instead of 36459CPS.

12-ton tool die adapter

The die adapters shown in Figures 33 and 34, locked into a WH3 tool, allow you to choose a fast acting 12-ton tool with a 1 1/2" jaw opening and 360° swivel without reinvesting in dies.

Features and benefits

- Conveniently adapts Kearney tools to accept Burndy® "U" dies or WH1 dies
- Positive locking mechanism on tool securely locks adapter in position
- Push button mechanism secures Burndy® die firmly into adapter
- Made from durable tool steel for long life



Figure 13. "U" die adapter 3756 in the PH13 tool

Table 8. Ordering Information

Description	Catalog No.	Net Wt.
WH1 Adapter	100096-W1	6 oz.
"U" Die Adapter	3756	6 oz.



Figure 14. Cutoff tool 100024CPS

Table 9. Accessories

Description	Catalog No.	Net Wt.
Accessories For "WH" Tools		
Squeezon Cut-Off Blade #6 to 4/0 "O" & "D" Die	100024CPS	3 lbs.
Squeezon Cut-Off Blade 4/0 to 500 "N" Die	100026	6 lbs.
Load Cell with Gauge	10050CPS	4-1/2 lbs.
Case for 12-Ton Tool Die		
Die Case 12-ton dies (Holds 9 dies)	40160CPS	1-1/2 lbs.

Table 10. Dies For 15-ton PH3, PH4, PH14, PH15 and RH15 Tools

Die Size	Catalog Number	Net Wt. Each
D	100472CPS	3-1/2 lbs.
N	100473CPS	3-1/2 lbs.
R	100057CPS	3-1/2 lbs.
U	100474	3-1/2 lbs.
1-2	100470CPS	3-1/2 lbs.
1-1/8-2	100471CPS	3-1/2 lbs.
1-5/16	100440CPS	3-1/2 lbs.
1-1/2	100460CPS	3-1/2 lbs.
1-5/8	100459*	3-1/2 lbs.
1-3/4	100075CPS*	3-1/2 lbs.

Note: If the required die size is not listed above, 12-ton dies listed in Table 7 may be used with adapter 100096CPS.

* Hex dies



Figure 15. WH1 adapter, catalog number 100096-W1

Cutters

Compact electric cable cutter

Small, Heavy-Duty

- Just 9" long and 1 lb.
- High-leverage jaws with shear-cut blades
- Plastic covered, non-slip grips
- Compact cutter fits into most tool pouches
- NOT an insulated tool

Not for use on ACSR or Steel Wire.



Figure 16. Compact electric cable cutter (#0890CSJ)

Table 11. Specifications

Catalog Number	Approx. Weight		Length		Copper Cable	Aluminum Cable
	lbs.	kg.	inch	mm		
0890CSJ	1	0.5	9.5	240	2/0	4/0

Compact ratcheting cable cutter

Lightweight cutter, for confined spaces

- Just 19" long and 3-1/2 lbs., both blades cut
- Ratchet-type jaws with shear-cut blades grip and hold while moderate pumping action cuts cable
- Jaw keeper prevents jaws from spreading while under heavy loads
- Leaves no burrs or sharp edges
- Fiberglass handles with non-slip, plastic grips
- Cutter has self-lubricating ratchet and only six moving parts

Not for use on EHS guy wire.



Figure 17. Compact ratcheting cable cutter (#6990FHL)

Table 12. Specifications

Catalog Number	Approx. Weight		Length		Single Core ACSR	Three Core ACSR
	lbs.	kg.	inch	mm		
6990FHL	3.5	1.6	19	485	653 kcmil	336 kcmil

ACSR wire rope and cable cutter

- An economical tool for general cutting
- Shear-cut blades give clean, sharp cuts with minimal distortion
- Cuts soft and hard steel cable, wire rope and small ACSR cable



Figure 18. ACSR wire rope and cable cutter (#0290FHJ)

Table 13. Specifications

Catalog Number	Approx. Weight		Length		Copper, Aluminum		Wire Rope		ACSR	
	lbs.	kg.	inch	mm	inch	mm	inch	mm	inch	mm
0290FHJ	4.75	2.2	28	710	1	25	1/2	13	7/16	12

Shear-type hand operated cutters

Compact, lightweight and rugged

- Drop-forged, alloy tool steel jaws with shear-cut blades
- Cuts copper or aluminum, power and communications cable
- Fiberglass handles for 2-handed control

Not for use on ACSR cable.



Figure 19. Shear-type hand operated cutters (#0290FCS)

Table 14. Specifications

Catalog Number	Approx. Weight		Length		Copper Power Cable	Aluminum Power Cable	Communications Cable		Replacement Cutterhead Catalog Number
	lbs.	kg.	inch	mm			inch	mm	
0290FCS	4.5	2	25.5	650	500 kcmil	750 kcmil	1-3/8	35	0213CSS

Ratchet-type soft cable cutter

Large capacity, easy to use

- 27" Long and 10 lbs.
- Jaw keeper prevents jaws from spreading while under heavy loads
- Ratchet mechanism provides five times the mechanical advantage over manual cutters

Not to be used on ACSR or guy wire.



Figure 20. Ratchet-type soft cable cutter (#8690FSK)

Table 15. Specifications

Catalog Number	Approx. Weight		Length		Copper and Aluminum Cable, All Types		Replacement Cutterhead Catalog Number
	lbs.	kg.	inch	mm	inch	mm	
8690FSK	10.5	4.75	27.5	700	2	51	8613FSK

Ratchet-type hard cable cutter

Universal, makes cutting easy

- Ratchet and chain increase cutting pressure as handles open and close
- Moderate pressure needed to open and close handles
- Can be used effectively with short strokes in confined spaces
- Increased mechanical advantage over manual cutters

Not to be used on insulated copper or aluminum cable.



Figure 21. Ratchet-type hard cable cutter (#8690FH)

Table 16. Specifications

Catalog Number	Approx. Weight		Length		ACSR, ACAR, ZEBRA & Telephone Cable (self-supporting)		Replacement Cutterhead Catalog Number
	lbs.	kg.	inch	mm	inch	mm	
8690FH	10.5	4.75	29.25	745	1-3/16	30	8613FH

Ratchet-type guy strand cutter

Small, lightweight and durable

- Notched shear-cut blades hold material firmly in place while ratchet and chain produce easy, progressive cuts
- Makes clean, square cuts with minimal distortion
- Increased mechanical advantage over manual cutters

Not for use on soft cable



Figure 22. Ratchet-type guy strand cutter (#8690CK)

Table 17. Specifications

Catalog Number	Approx. Weight		Length		EHS Guy Strand		Common Guy Strand		Replacement Cutterhead Catalog Number
	lbs.	kg.	inch	mm	inch	mm	inch	mm	
8690CK	8.75	4	28	710	1/2	13	1/2	13	8613CK

Ratchet-type wire rope cutter

- Ratchet-type jaws with notched shear-cut blades hold and lock material in place
- Cuts aircraft cable, EHS guy strand, wire rope, and hard, stainless-steel cable
- Cuts all strands with minimal crushing or distortion
- Increased mechanical advantage over manual cutters



Figure 23. Ratchet-type wire rope cutter (#8690TN)

Table 18. Specifications

Catalog Number	Approx. Weight		Length		EHS Guy Strand		Aircraft Cable, Hard Stainless Steel Cable		Replacement Cutterhead Catalog Number
	lbs.	kg.	inch	mm	inch	mm	inch	mm	
8690TN	13	6	36	915	5/8	16	3/4	19	8613TN

General purpose center cut cutters

Lightweight, fiberglass handles

- All-purpose jaws with center-cut blades
- Cuts soft, medium, and hard metals
- Maximum hardness of material to be cut: Brinell 455/Rockwell C48
- Lockplate keeps jaws from loosening
- Toggle joints turn 50 lbs. hand pressure to 4000 lbs. cutting pressure
- Screw-type adjustment realigns edges
- Strong, lightweight fiberglass handles
- Popular cutter



Figure 24. General purpose center cut cutters (#0190FC)

Table 19. Specifications

Catalog Number	Approx. Weight		Length		Soft/Medium Hard Materials (To Brinell 300, Rockwell C31)		Common Guy Strand		Replacement Cutterhead Catalog Number
	lbs.	kg.	inch	mm	inch	mm	inch	mm	
0190FC	4.5	2	24.5	620	7/16	11	5/16	8	0113C

Heavy-duty cutters

Large capacity and lightweight

- Recommended for the most demanding hand cutting applications
- Heavy-duty straps support the jaws
- Maximum hardness of material to be cut: Brinell 455/Rockwell C48
- Lockplate keeps jaws from loosening
- Toggle joints turn 50 lbs. hand pressure to 4,000 lbs. cutting pressure
- Screw-type adjustment realigns edges
- Tubular steel or fiberglass handles



Figure 25. Heavy-duty cutters (#0290MCX)

Table 20. Specifications

Catalog Number	Approx. Weight		Length		Hard Metal, Wire Mesh & Reinforcing Rod & Bar		Replacement Cutterhead Catalog Number
	lbs.	kg.	inch	mm	inch	mm	
0290MCX (Tubular Steel)	9.25	4.25	30	760	3/8	10 (#3Bar)	0213CX
0290FCX (Fiberglass)	9.5	4.3	30	960	3/8	10 (#3Bar)	0213CX

Kearney die reference table

Table 21. Kearney Die Reference

Kearney Die Designation	Catalog Number			
	O-60 Mechanical 6-Ton	WH2/WH3/WH4/PH2/PH13 Hydraulic & BH4 (Battery) 12-Ton	PH3/PH4/PH14/PH15/RH15 Hydraulic 15-Ton	PH25 Hydraulic 25-Ton
3/16	36181CPS	NA	NA	NA
1/4	30154	36498	36498 with 100096CPS Adapter	NA
5/16	30043	36496	36496 with 100096CPS Adapter	NA
3/8	30042	36494CPS	36494CPS with 100096CPS Adapter	NA
1/2	30041	36490CPS	36490CPS with 100096CPS Adapter	NA
500	100625CPS (Non-Bow)	NA	NA	NA
510	100600CPS (Non-Bow)	36838	36838 with 100096CPS Adapter	NA
9/16	26958	36488	36488 with 100096CPS Adapter	NA
572	NA	36836	36836 with 100096CPS Adapter	NA
19/32	30914	36486CPS	36486CPS with 100096CPS Adapter	NA
5/8 Nose	Fixed Nose Die	NA	NA	NA
5/8-1	26992	36484CPS	36484CPS with 100096CPS Adapter	100006-04
620	100613 (Non-Bow)	NA	NA	NA
635	100601 (Non-Bow)	36482CPS	36482CPS with 100096CPS Adapter	NA
11/16	40114	40151CPS	40151CPS with 100096CPS Adapter	NA
3/4	NA	49435 (Hex)	49435 (Hex) with 100096CPS Adapter	NA
727	NA	40063	40063 with 100096CPS Adapter	100006-7
737	30084	36480	36480 with 100096CPS Adapter	NA
747	100602 (Non-Bow)	36834CPS	36834CPS with 100096CPS Adapter	NA
781	30450	36478	36478 with 100096CPS Adapter	NA
702	100618CPS (Non-Bow)	NA	NA	NA
840	30124	36476	36476 with 100096CPS Adapter	100006-12
845	100609 (Non-Bow)	NA	NA	NA
29/32	NA	49437 (Hex)	49437 (Hex) with 100096CPS Adapter	NA
15/16	NA	36474	36474 with 100096CPS Adapter	NA
15/16 Hex	NA	100370CPS	100370CPS	NA
980	100606 (Non-Bow)	NA	NA	NA
1-2	NA	100399 (Hex)	100470CPS	NA
1010	NA	NA	NA	NA
1-1/8-1	NA	36463 (Hex)	NA	100006-16
1-1/8-2	NA	100400 (Hex)	100471 (Hex)	NA
1-5/16	NA	100433CPS (Hex)	100477 (Insert Type) 100440	NA
1-1/2	NA	100434CPS (Hex)	100460	100007-3 (Hex)
1-5/8	NA	NA	100459	100007-4 (Hex)
1-3/4	NA	NA	100075CPS (Hex)	100007-6 (Hex)
2-1/8	NA	NA	NA	100007-9 (Hex)
2-1/2	NA	NA	NA	NA
B	30554CPS	NA	NA	NA
B-K-T	NA	36832CPS	36832CPS with 100096CPS Adapter	NA
BU-C	30744	NA	NA	NA
C	NA	36830CPS	36830CPS	NA
D	26994	36457	100472CPS	NA
J	48410	NA	NA	NA
K	40495CPS	NA	NA	NA
N	NA	36459CPS**	100473CPS	NA
O	26993	36467	36467 with 100096CPS Adapter	NA
P	30611CPS	36828	36828 with 100096CPS Adapter	NA
R	NA	NA	100057	100007-23
T	40493CPS	NA	NA	NA

** For WH3 tools, use 36459-3 die instead of 36459CPS.

Table 21. Kearney Die Reference, continued

Kearney Die Designation	Catalog Number			
	O-60 Mechanical 6-Ton	**WH2/WH3/WH4/PH2/PH13 Hydraulic & BH4 (Battery) 12-Ton**	**PH3/PH4/PH14/PH15/RH15 Hydraulic 15-Ton**	**PH25 Hydraulic 25-Ton**
U	NA	36472	100474	NA
EEI-7A	100603-7	NA	NA	NA
EEI-9A	100603-9	NA	NA	NA
EEI-11A	100603-11	NA	NA	NA
ORANGE	49341	NA	NA	NA
PLUM	36559	NA	NA	NA

This page is intentionally left blank.

Eaton
1000 Eaton Boulevard
Cleveland, OH 44122
United States
Eaton.com

Eaton's Power Systems Division
2300 Badger Drive
Waukesha, WI 53188
United States
Eaton.com/cooperpowerseries



© 2016 Eaton
All Rights Reserved
Printed in USA
Publication No. CA325006EN

Eaton is a registered trademark.

All other trademarks are property
of their respective owners.

For Eaton's Cooper Power series product information call 1-877-277-4636 or visit:
www.eaton.com/cooperpowerseries.