SRX5800 Services Gateway

Hardware Guide



Published: 2014-06-03

Copyright © 2014, Juniper Networks, Inc.

Juniper Networks, Inc.
1194 North Mathilda Avenue
Sunnyvale, California 94089
USA
408-745-2000
www.juniper.net

Juniper Networks, Junos, Steel-Belted Radius, NetScreen, and ScreenOS are registered trademarks of Juniper Networks, Inc. in the United States and other countries. The Juniper Networks Logo, the Junos logo, and JunosE are trademarks of Juniper Networks, Inc. All other trademarks, service marks, registered trademarks, or registered service marks are the property of their respective owners.

Juniper Networks assumes no responsibility for any inaccuracies in this document. Juniper Networks reserves the right to change, modify, transfer, or otherwise revise this publication without notice.

SRX5800 Services Gateway Hardware Guide
Copyright © 2014, Juniper Networks, Inc.
All rights reserved. Printed in USA.

Revision History
August 2008—530-025322-01 Revision 01 Initial release
October 2008—530-025322-01 Revision 02 Corrected system description section
October 2008—530-025322-01 Revision 03 Minor change to Routing Engine section
April 2009—530-029952-01 Revision 01 Added Flex IOC and port modules
July 2009—530-029952-01 Revision 02
November 2010—Added high-capacity AC power supplies
February 2011—Revised installation procedure
March 2012—Added procedure for adding SPCs to a chassis cluster
August 2012—Added MTU values for IOCs
August 2012—Revised HA LED descriptions
December 2012—Added high-capacity DC power supplies, moved card content into *SRX5600 and SRX5800 Services Gateway Card Guide*
June 2012—Corrected DC input circuit breaker rating
June 2013—Corrected DC input circuit breaker rating and incorporated additional warnings that the chassis must be connected to earth ground
December 2013—Added new MPC and 3 new MIC cards
February 2014—Updated the IOC replacement procedure to include the reboot step after inserting the IOC
May 2014—Added the steps to copy certificates when replacing a routing engine in a chassis cluster.
June 2014—Added the EMC compliance requirements in Israel and the procedure to perform initial software configuration using J-Web

The information in this document is current as of the date on the title page.

SOFTWARE LICENSE

The terms and conditions for using this software are described in the software license contained in the acknowledgment to your purchase order or, to the extent applicable, to any reseller agreement or end-user purchase agreement executed between you and Juniper Networks. By using this software, you indicate that you understand and agree to be bound by those terms and conditions.

Generally speaking, the software license restricts the manner in which you are permitted to use the software and may contain prohibitions against certain uses. The software license may state conditions under which the license is automatically terminated. You should consult the license for further details.

For complete product documentation, please see the Juniper Networks Web site at www.juniper.net/techpubs.

END USER LICENSE AGREEMENT

The Juniper Networks product that is the subject of this technical documentation consists of (or is intended for use with) Juniper Networks software. Use of such software is subject to the terms and conditions of the End User License Agreement (“EULA”) posted at http://www.juniper.net/support/eula.html. By downloading, installing or using such software, you agree to the terms and conditions of that EULA.

Table of Contents

About This Guide xi

Objectives xi
Audience xi
Documentation Conventions xi
SRX Series Documentation and Release Notes xiii
Obtaining Documentation xiv
Documentation Feedback xiv
Requesting Technical Support xiv

Part 1 SRX5800 Services Gateway Overview

Chapter 1 Introduction to the SRX5800 Services Gateway 3

SRX5800 Services Gateway Description 3
SRX5800 Services Gateway Physical Specifications 3
SRX5800 Services Gateway Component Redundancy 5

Chapter 2 SRX5800 Services Gateway Hardware Components 7

SRX5800 Services Gateway Chassis 7
SRX5800 Services Gateway Rack-Mounting Hardware 10
SRX5800 Services Gateway Card Cage and Slots 11
SRX5800 Services Gateway Midplane Description 12
SRX5800 Services Gateway Interface Card Description 13
SRX5800 Services Gateway SPC Description 16
SRX5800 Services Gateway Host Subsystem Description 17
SRX5800 Services Gateway SCB Description 17
SRX5800 Services Gateway Routing Engine Description 19
SRX5800 Services Gateway Craft Interface 20
SRX5800 Services Gateway Craft Interface Overview 20
SRX5800 Services Gateway Craft Interface Alarm LEDs and Alarm Cutoff/Lamp Test Button 21
SRX5800 Services Gateway Craft Interface Host Subsystem LEDs 22
SRX5800 Services Gateway Craft Interface Power Supply LEDs 23
SRX5800 Services Gateway Craft Interface Card OK/Fail LEDs 23
SRX5800 Services Gateway Craft Interface Fan LEDs 24
SRX5800 Services Gateway Craft Interface Online Buttons 24
SRX5800 Services Gateway Craft Interface Alarm Relay Contacts 26
SRX5800 Services Gateway Power System Description 27
SRX5800 Services Gateway Power System Overview 28
SRX5800 Services Gateway High-Capacity AC Power Supply 31
SRX5800 Services Gateway High-Capacity AC Power Supply LEDs 33
SRX5800 Services Gateway Standard-Capacity AC Power Supply 34

Copyright © 2014, Juniper Networks, Inc.

SRX5800 Services Gateway Standard-Capacity AC Power Supply LEDs . . . 35
SRX5800 Services Gateway High-Capacity DC Power Supply 36
SRX5800 Services Gateway High-Capacity DC Power Supply LEDs 38
SRX5800 Services Gateway Standard-Capacity DC Power Supply 39
SRX5800 Services Gateway Standard-Capacity DC Power Supply LEDs . . 40
SRX5800 Services Gateway Cooling System Description 41
SRX5800 Services Gateway Cable Manager Description 43

Part 2 Setting Up the SRX5800 Services Gateway

Chapter 3 SRX5800 Services Gateway Installation 47

Overview of Installing the SRX5800 Services Gateway 47

Chapter 4 Preparing the Site for the SRX5800 Services Gateway Installation 49

Site Preparation Checklist for the SRX5800 Services Gateway 49
SRX5800 Services Gateway Rack Requirements 50
SRX5800 Services Gateway Rack Size and Strength Requirements 51
Spacing of Rack-Mounting Bracket Holes for the SRX5800 Services Gateway 52
Connection to Building Structure for the SRX5800 Services Gateway Rack 52
Clearance Requirements for SRX5800 Services Gateway Airflow and Hardware Maintenance 52
SRX5800 Services Gateway Cabinet Requirements 53
SRX5800 Services Gateway Cabinet Size and Clearance Requirements . . . 54
SRX5800 Services Gateway Cabinet Airflow Requirements 54

Chapter 5 Unpacking the SRX5800 Services Gateway 57

Tools and Parts Required to Unpack the SRX5800 Services Gateway 57
Unpacking the SRX5800 Services Gateway 57
Verifying the SRX5800 Services Gateway Parts Received 59

Chapter 6 Installing the SRX5800 Services Gateway Mounting Hardware 63

Installing the SRX5800 Services Gateway Mounting Hardware for a Four-Post Rack or Cabinet 63
Installing the SRX5800 Services Gateway Mounting Hardware in an Open-Frame Rack 65

Chapter 7 Installing the SRX5800 Services Gateway 69

Tools Required to Install the SRX5800 Services Gateway 69
Removing Components from the SRX5800 Chassis Before Installing It in the Rack 69
Removing the Power Supplies Before Installing the SRX5800 Services Gateway Chassis 70
Removing the Cable Manager Before Installing the SRX5800 Services Gateway Chassis 71
Removing Fan Trays Before Installing the SRX5800 Services Gateway Chassis 72

Copyright © 2014, Juniper Networks, Inc.

Removing Cards Before Installing the SRX5800 Services Gateway Chassis . . . 74
Installing the SRX5800 Services Gateway Chassis in the Rack . . . 76
Reinstalling Components in the SRX5800 Services Gateway Chassis After Installing It in the Rack . . . 79
Reinstalling Power Supplies After Installing the SRX5800 Services Gateway Chassis . . . 79
Reinstalling Fan Trays After Installing the SRX5800 Services Gateway Chassis . . . 80
Reinstalling Cards After Installing the SRX5800 Services Gateway Chassis . . . 82
Reinstalling the Cable Manager After Installing the SRX5800 Services Gateway Chassis . . . 84

Chapter 8 Connecting the SRX5800 Services Gateway . . . 87

Tools and Parts Required for SRX5800 Services Gateway Connections . . . 87
Connecting the SRX5800 Services Gateway to Management and Alarm Devices . . . 88
Connecting the SRX5800 Services Gateway to a Network for Out-of-Band Management . . . 88
Connecting the SRX5800 Services Gateway to a Management Console or an Auxiliary Device . . . 89
Connecting an SRX5800 Services Gateway to an External Alarm-Reporting Device . . . 90
Connecting Network Cables to SRX5800 Services Gateway IOCs and Port Modules . . . 91

Chapter 9 Grounding and Providing Power to the SRX5800 Services Gateway . . . 95

Tools and Parts Required for SRX5800 Services Gateway Grounding and Power Connections . . . 95
Grounding the SRX5800 Services Gateway . . . 96
Connecting Power to an AC-Powered SRX5800 Services Gateway . . . 97
Powering On an AC-Powered SRX5800 Services Gateway . . . 101
Connecting Power to a DC-Powered SRX5800 Services Gateway . . . 102
Powering On a DC-Powered SRX5800 Services Gateway . . . 105
Powering Off the SRX5800 Services Gateway . . . 106

Chapter 10 Configuring Junos OS for the SRX5800 Services Gateway . . . 109

SRX5800 Services Gateway Software Configuration Overview . . . 109
Initially Configuring the SRX5800 Services Gateway . . . 110
Performing Initial Software Configuration Using J-Web . . . 113
Configuring Root Authentication and the Management Interface from the CLI . . . 114
Configuring Interfaces, Zones, and Policies with J-Web . . . 114
Configuring the Hostname . . . 115
Configuring Interfaces . . . 115
Configuring Zones and Assigning Interfaces . . . 116
Configuring Security Policies . . . 116

Copyright © 2014, Juniper Networks, Inc.

Part 3 SRX5800 Services Gateway Hardware Maintenance, Replacement, and Troubleshooting Procedures

Chapter 11 Maintaining the SRX5800 Services Gateway Hardware Components . . . 121

Tools and Parts Required to Maintain the SRX5800 Services Gateway 121
Routine Maintenance Procedures for the SRX5800 Services Gateway 121
Maintaining the SRX5800 Cooling System Components 122
Maintaining the Air Filter on the SRX5800 Services Gateway 122
Maintaining the Fan Trays on the SRX5800 Services Gateway 123
Maintaining the SRX5800 Services Gateway Host Subsystem and SCBs 123
Maintaining the SRX5800 Packet Forwarding Engine Components 125
Maintaining Interface Cards and SPCs on the SRX5600 Services Gateway 125
Maintaining MICs and Port Modules on the SRX5800 Services Gateway . . . 127
Maintaining SRX5800 Services Gateway Network Cables 128
Handling and Storing SRX5800 Services Gateway Cards 129
SRX5800 Services Gateway Card Terminology 129
Holding an SRX5800 Services Gateway Card 130
Storing an SRX5800 Services Gateway Card 132
Maintaining SRX5800 Services Gateway Power Supplies 133

Chapter 12 Troubleshooting the SRX5800 Services Gateway Hardware Components 135

Troubleshooting Resources for the SRX5800 Services Gateway 135
Troubleshooting the SRX5800 Services Gateway with the Junos OS CLI . . 135
Troubleshooting the SRX5800 Services Gateway with Chassis and Interface Alarm Messages 136
Troubleshooting the SRX5800 Services Gateway with Alarm Relay Contacts 136
Troubleshooting the SRX5800 Services Gateway with the Craft Interface LEDs 136
Troubleshooting the SRX5800 Services Gateway with the Component LEDs 137
Juniper Networks Technical Assistance Center 138
Troubleshooting the SRX5800 Services Gateway Cooling System 138
Troubleshooting SRX5800 Services Gateway Interface Cards 139
Troubleshooting SRX5800 Services Gateway MICs and Port Modules 140
Troubleshooting SRX5800 Services Gateway SPCs 141
Troubleshooting the SRX5800 Services Gateway Power System 142

Chapter 13 Replacing SRX5800 Services Gateway Hardware Components 145

SRX5800 Services Gateway Field-Replaceable Units 146
Tools and Parts Required to Replace SRX5800 Services Gateway Hardware Components 146
Replacing the SRX5800 Services Gateway Craft Interface 148
Disconnecting the Alarm Relay Wires from the SRX5800 Services Gateway Craft Interface 148
Removing the SRX5800 Services Gateway Craft Interface 148
Installing the SRX5800 Services Gateway Craft Interface 149

Copyright © 2014, Juniper Networks, Inc.

Connecting the Alarm Relay Wires to the SRX5800 Services Gateway Craft Interface . . . 150
Replacing an SRX5800 Services Gateway Fan Tray . . . 150
Removing an SRX5800 Services Gateway Fan Tray . . . 151
Installing an SRX5800 Services Gateway Fan Tray . . . 153
Replacing the SRX5800 Services Gateway Air Filter . . . 155
Removing the SRX5800 Services Gateway Air Filter . . . 155
Installing the SRX5800 Services Gateway Air Filter . . . 156
Replacing SRX5800 Services Gateway Host Subsystem Components . . . 157
Taking the SRX5800 Services Gateway Host Subsystem Offline . . . 157
Operating and Positioning the SRX5800 Services Gateway SCB Ejectors . . . 158
Replacing an SRX5800 Services Gateway SCB . . . 158
Removing an SRX5800 Services Gateway SCB . . . 159
Installing an SRX5800 Services Gateway SCB . . . 160
Replacing the SRX5800 Services Gateway Routing Engine . . . 162
Removing the SRX5800 Services Gateway Routing Engine . . . 163
Installing the SRX5800 Services Gateway Routing Engine . . . 164
Replacing Connections to SRX5800 Services Gateway Routing Engine Interface Ports . . . 167
Replacing the Management Ethernet Cable on an SRX5800 Services Gateway . . . 167
Replacing the SRX5800 Services Gateway Console or Auxiliary Cable . . . 167
Replacing SRX5800 Services Gateway IOCs . . . 168
Removing an SRX5800 Services Gateway IOC . . . 168
Installing an SRX5800 Services Gateway IOC . . . 170
Replacing SRX5800 Services Gateway Flex IOCs . . . 173
Removing an SRX5800 Services Gateway Flex IOC . . . 173
Installing an SRX5800 Services Gateway Flex IOC . . . 175
Replacing SRX5800 Services Gateway Port Modules . . . 177
Removing an SRX5800 Services Gateway Port Module . . . 177
Installing an SRX5800 Services Gateway Port Module . . . 179
Replacing SRX5800 Services Gateway MPCs . . . 181
Removing an SRX5800 Services Gateway MPC . . . 181
Installing an SRX5800 Services Gateway MPC . . . 183
Replacing SRX5800 Services Gateway MICs . . . 185
Removing an SRX5800 Services Gateway MIC . . . 185
Installing an SRX5800 Services Gateway MIC . . . 188
Installing MPCs and MICs in an Operating SRX5800 Services Gateway Chassis Cluster . . . 190
Replacing an SRX5800 Services Gateway Network Interface Cable . . . 193
Removing an SRX5800 Services Gateway Network Interface Cable . . . 193
Installing an SRX5800 Services Gateway Network Interface Cable . . . 194
Replacing SRX5800 Services Gateway SPCs . . . 196
Removing an SRX5800 Services Gateway SPC . . . 196
Installing an SRX5800 Services Gateway SPC . . . 198
Replacing SPCs in an Operating SRX5800 Services Gateway Chassis Cluster . . . 203

Copyright © 2014, Juniper Networks, Inc.

Replacing SRX5800 Services Gateway XFP and SFP Transceivers 206
Removing an SRX5800 Services Gateway SFP or XFP Transceiver 206
Installing an SRX5800 Services Gateway SFP or XFP Transceiver 207
Upgrading an SRX5800 Services Gateway from Standard-Capacity to High-Capacity Power Supplies 208
Replacing an SRX5800 Services Gateway AC Power Supply 211
Removing an SRX5800 Services Gateway AC Power Supply 211
Installing an SRX5800 Services Gateway AC Power Supply 214
Replacing an SRX5800 Services Gateway DC Power Supply 216
Removing an SRX5800 Services Gateway DC Power Supply 216
Installing an SRX5800 Services Gateway DC Power Supply 219
Replacing an SRX5800 Services Gateway AC Power Supply Cord 224
Disconnecting an SRX5800 Services Gateway AC Power Supply Cord 224
Connecting an SRX5800 Services Gateway AC Power Supply Cord 224
Replacing an SRX5800 Services Gateway DC Power Supply Cable 226
Disconnecting an SRX5800 Services Gateway DC Power Supply Cable . . . 226
Connecting an SRX5800 Services Gateway DC Power Supply Cable 227
Replacing the SRX5800 Services Gateway Cable Manager 229
Removing the SRX5800 Services Gateway Cable Manager 230
Installing the SRX5800 Services Gateway Cable Manager 230

Part 4 Appendixes

Appendix A **Safety and Regulatory Compliance Information 235**

SRX5800 Services Gateway Definition of Safety Warning Levels 235
SRX5800 Services Gateway General Safety Guidelines and Warnings 237
Additional SRX5800 Services Gateway Warnings 238
Qualified Personnel Warning 238
Restricted Access Area Warning 239
Preventing Electrostatic Discharge Damage to the SRX5800 Services Gateway 241
SRX5800 Services Gateway Fire Safety Requirements and Fire Suppression Equipment 243
SRX5800 Services Gateway Installation Safety Guidelines and Warnings 244
Chassis Lifting Guidelines 244
Installation Instructions Warning 245
Rack-Mounting Requirements and Warnings 246
Ramp Warning 249
SRX5800 Services Gateway Laser and LED Safety Guidelines and Warnings . . 250
General Laser Safety Guidelines 250
Class 1 Laser Warning 251
Class 1 LED Product Warning 251
Laser Beam Warning 252
Radiation from Open Port Apertures Warning 253
SRX5800 Services Gateway Maintenance and Operational Safety Guidelines and Warnings 254
Battery Handling Warning 254
Jewelry Removal Warning 255
Lightning Activity Warning 256

Copyright © 2014, Juniper Networks, Inc.

Operating Temperature Warning 257
Product Disposal Warning 258
SRX5800 Services Gateway Electrical Safety Guidelines and Warnings 259
In Case of Electrical Accident 259
General Electrical Safety Guidelines and Warnings 260
DC Power Electrical Safety Guidelines and Warnings 264
SRX5800 Services Gateway Agency Approvals 270
SRX5800 Services Gateway Compliance Statements for EMC Requirements 271
Canada 271
European Community 271
Israel 272
Japan 272
United States 272

Appendix B SRX5800 Services Gateway Environmental Specifications 273

SRX5800 Services Gateway Environmental Specifications 273

Appendix C SRX5800 Services Gateway Power Guidelines, Requirements, and Specifications 275

Calculating Power Requirements for the SRX5800 Services Gateway 275
SRX5800 Services Gateway Chassis Grounding Specifications 280
SRX5800 Services Gateway Chassis Grounding Point Specifications 280
SRX5800 Services Gateway Grounding-Cable Lug Specification 281
SRX5800 Services Gateway Grounding Cable Specifications 282
SRX5800 Services Gateway AC Power Specifications and Requirements 282
SRX5800 Services Gateway AC Power Supply Specifications 282
AC Power Circuit Breaker Requirements for the SRX5800 Services Gateway 283
AC Power Cord Specifications for the SRX5800 Services Gateway 284
SRX5800 Services Gateway DC Power Specifications and Requirements 286
SRX5800 Services Gateway DC Power Supply Specifications 286
DC Power Circuit Breaker Requirements for the SRX5800 Services Gateway 287
DC Power Source Cabling for the SRX5800 Services Gateway 287
DC Power Cable Specifications for the SRX5800 Services Gateway 289
DC Power Cable Lug Specifications for the SRX5800 Services Gateway . . 289
SRX5800 Services Gateway Electrical Wiring Guidelines 290

Appendix D Cable and Wire Guidelines and Specifications for the SRX5800 Services Gateway 293

Network Cable Specifications and Guidelines for the SRX5800 Services Gateway 293
Signal Loss in Multimode and Single-Mode Fiber-Optic Cable for the SRX5800 Services Gateway 293
Attenuation and Dispersion in Fiber-Optic Cable for the SRX5800 Services Gateway 294
Calculating Power Budget for Fiber-Optic Cable for the SRX5800 Services Gateway 295

Copyright © 2014, Juniper Networks, Inc.

Calculating Power Margin for Fiber-Optic Cable for the SRX5800 Services Gateway . . . 295
Routing Engine Interface Cable and Wire Specifications for the SRX5800 Services Gateway . . . 297
Alarm Relay Contact Wire Specifications for the SRX5800 Services Gateway . . . 298
Console Port Cable and Wire Specifications for the SRX5800 Services Gateway . . . 298

Appendix E Cable Connector Pinouts . . . 299

RJ-45 Connector Pinouts for the SRX5800 Services Gateway Routing Engine Ethernet Port . . . 299
RJ-45 Connector Pinouts for the SRX5800 Services Gateway Routing Engine Auxiliary and Console Ports . . . 300

Appendix F Contacting Customer Support and Returning the SRX5800 Services Gateway Hardware . . . 301

Return Procedure for the SRX5800 Services Gateway . . . 301
Locating SRX5800 Services Gateway Component Serial Numbers . . . 302
Listing the SRX5800 Services Gateway Component Serial Numbers with the Command-Line Interface . . . 302
Locating the SRX5800 Services Gateway Chassis Serial Number Label . . . 304
Locating the SRX5800 Services Gateway Power Supply Serial Number Label . . . 304
Locating the SRX5800 Services Gateway Craft Interface Serial Number Label . . . 305
Contacting Customer Support to Obtain Return Materials Authorization for the SRX5800 Services Gateway . . . 306
Information You Might Need to Supply to JTAC . . . 306
Contacting Customer Support . . . 306
Packing the SRX5800 Services Gateway or a Component for Shipment . . . 307
Required Tools and Parts for Packing the SRX5800 Services Gateway . . . 307
Packing the SRX5800 Services Gateway for Shipment . . . 308
Packing SRX5800 Services Gateway Components for Shipment . . . 309

Part 5 Index

Index . . . 313

Copyright © 2014, Juniper Networks, Inc.

About This Guide

- Objectives on page xi
- Audience on page xi
- Documentation Conventions on page xi
- SRX Series Documentation and Release Notes on page xiii
- Obtaining Documentation on page xiv
- Documentation Feedback on page xiv
- Requesting Technical Support on page xiv

Objectives

This guide describes hardware components and installation, basic configuration, and basic troubleshooting procedures for the Juniper Networks SRX5800 Services Gateway. It explains how to prepare your site for services gateway installation, unpack and install the hardware, power on the services gateway, perform initial software configuration, and perform routine maintenance. After completing the installation and basic configuration procedures covered in this guide, see the Junos OS configuration guides for information about further Junos OS configuration.

Audience

This guide is designed for network administrators who are installing and maintaining a Juniper Networks SRX5800 Services Gateway or preparing a site for services gateway installation. To use this guide, you need a broad understanding of networks in general and the Internet in particular, networking principles, and network configuration. Any detailed discussion of these concepts is beyond the scope of this guide.

Documentation Conventions

Table 1 on page xii defines the notice icons used in this guide.

Copyright © 2014, Juniper Networks, Inc.

Table 1: Notice Icons

Icon	Meaning	Description
	Informational note	Indicates important features or instructions.
	Caution	Indicates a situation that might result in loss of data or hardware damage.
	Warning	Alerts you to the risk of personal injury or death.
	Laser warning	Alerts you to the risk of personal injury from a laser.
	Tip	Indicates helpful information.
	Best practice	Alerts you to a recommended use or implementation.

Table 2 on page xii defines the text and syntax conventions used in this guide.

Table 2: Text and Syntax Conventions

Convention	Description	Examples
Bold text like this	Represents text that you type.	To enter configuration mode, type the **configure** command: user@host> **configure**
`Fixed-width text like this`	Represents output that appears on the terminal screen.	`user@host>` **show chassis alarms** `No alarms currently active`
Italic text like this	• Introduces or emphasizes important new terms. • Identifies guide names. • Identifies RFC and Internet draft titles.	• A policy *term* is a named structure that defines match conditions and actions. • *Junos OS CLI User Guide* • RFC 1997, *BGP Communities Attribute*
Italic text like this	Represents variables (options for which you substitute a value) in commands or configuration statements.	Configure the machine's domain name: [edit] root@# **set system domain-name** *domain-name*

Copyright © 2014, Juniper Networks, Inc.

Table 2: Text and Syntax Conventions *(continued)*

Convention	Description	Examples
Text like this	Represents names of configuration statements, commands, files, and directories; configuration hierarchy levels; or labels on routing platform components.	• To configure a stub area, include the **stub** statement at the **[edit protocols ospf area area-id]** hierarchy level. • The console port is labeled **CONSOLE**.
< > (angle brackets)	Encloses optional keywords or variables.	**stub <default-metric *metric*>;**
| (pipe symbol)	Indicates a choice between the mutually exclusive keywords or variables on either side of the symbol. The set of choices is often enclosed in parentheses for clarity.	**broadcast | multicast** **(*string1* | *string2* | *string3*)**
# (pound sign)	Indicates a comment specified on the same line as the configuration statement to which it applies.	**rsvp { # Required for dynamic MPLS only**
[ ] (square brackets)	Encloses a variable for which you can substitute one or more values.	**community name members [*community-ids*]**

Indention and braces ({ })	Identifies a level in the configuration hierarchy.	[edit]
		routing-options {
		  static {
		  route default {
		  nexthop *address*;
		  retain;
		  }
		  }
		}

; (semicolon)	Identifies a leaf statement at a configuration hierarchy level.	
GUI Conventions		
Bold text like this	Represents graphical user interface (GUI) items you click or select.	• In the Logical Interfaces box, select **All Interfaces**. • To cancel the configuration, click **Cancel**.
> (bold right angle bracket)	Separates levels in a hierarchy of menu selections.	In the configuration editor hierarchy, select **Protocols>Ospf**.

SRX Series Documentation and Release Notes

For a list of related SRX Series documentation, see http://www.juniper.net/techpubs/software/junos/. If the information in the latest release notes differs from the information in the documentation, follow the *Junos OS Release Notes*.

Copyright © 2014, Juniper Networks, Inc.

Obtaining Documentation

To obtain the most current version of all Juniper Networks technical documentation, see the product documentation page on the Juniper Networks website at http://www.juniper.net/ .

To order printed copies of this guide and other Juniper Networks technical documents, or to order a documentation CD that contains this guide, contact your sales representative.

Copies of the Management Information Bases (MIBs) available in a software release are included in the documentation CDs and are at www.juniper.net/techpubs/.

Documentation Feedback

We encourage you to provide feedback, comments, and suggestions so that we can improve the documentation. You can send your comments to techpubs-comments@junper.net, or fill out the documentation feedback form at http://www.juniper.net/techpubs/docbug/docbugreport.html. If you are using e-mail, be sure to include the following information with your comments:

- Document Name
- Document part number
- Page number
- Software release version (not required for *Network Operations Guides [NOGs])*

Requesting Technical Support

Technical product support is available through the Juniper Networks Technical Assistance Center (JTAC). If you are a customer with an active J-Care or JNASC support contract, or are covered under warranty, and need postsales technical support, you can access our tools and resources online or open a case with JTAC.

- JTAC policies—For a complete understanding of our JTAC procedures and policies, review the JTAC User Guide located at http://www.juniper.net/customers/support/downloads/710059.pdf.
- Product warranties—For product warranty information, visit http://www.juniper.net/support/warranty/.
- JTAC Hours of Operation—The JTAC centers have resources available 24 hours a day, 7 days a week, 365 days a year.

Self-Help Online Tools and Resources

For quick and easy problem resolution, Juniper Networks has designed an online self-service portal called the Customer Support Center (CSC) that provides you with the following features:

Copyright © 2014, Juniper Networks, Inc.

- Find CSC offerings: http://www.juniper.net/customers/support/
- Search for known bugs: http://www2.juniper.net/kb/
- Find product documentation: www.juniper.net/techpubs/
- Find solutions and answer questions using our Knowledge Base: http://kb.juniper.net/
- Download the latest versions of software and review release notes: http://www.juniper.net/customers/csc/software/
- Search technical bulletins for relevant hardware and software notifications: https://www.juniper.net/alerts/
- Join and participate in the Juniper Networks Community Forum: http://www.juniper.net/company/communities/
- Open a case online in the CSC Case Manager: http://www.juniper.net/cm/

To verify service entitlement by product serial number, use our Serial Number Entitlement (SNE) Tool located at https://tools.juniper.net/SerialNumberEntitlementSearch/.

Opening a Case with JTAC

You can open a case with JTAC on the Web or by telephone.

- Use the Case Manager tool in the CSC at http://www.juniper.net/cm/ .
- Call 1-888-314-JTAC (1-888-314-5822 toll-free in the USA, Canada, and Mexico).

For international or direct-dial options in countries without toll-free numbers, visit us at http://www.juniper.net/support/requesting-support.html.

Copyright © 2014, Juniper Networks, Inc.

Copyright © 2014, Juniper Networks, Inc.

PART 1

SRX5800 Services Gateway Overview

- Introduction to the SRX5800 Services Gateway on page 3
- SRX5800 Services Gateway Hardware Components on page 7

Copyright © 2014, Juniper Networks, Inc.

Copyright © 2014, Juniper Networks, Inc.

CHAPTER 1

Introduction to the SRX5800 Services Gateway

- SRX5800 Services Gateway Description on page 3
- SRX5800 Services Gateway Physical Specifications on page 3
- SRX5800 Services Gateway Component Redundancy on page 5

SRX5800 Services Gateway Description

The SRX5800 Services Gateway is a high-performance, highly scalable, carrier-class security device with multi-processor architecture.

The services gateway provides 12 slots that you can populate with 2 or 3 Switch Control Boards (SCBs) and up to 12 additional cards of the following types:

- Services Processing Cards (SPCs) provide the processing capacity to run integrated services such as firewall, IPsec, and IDP.
- Modular PIC Concentrators (MPCs) provide Ethernet interfaces that connect the services gateway to your network.
- I/O cards (IOCs) provide Ethernet interfaces that connect the services gateway to your network.
- Flex IOCs are similar to IOCs, but have slots for port modules that allow you greater flexibility in adding different types of Ethernet ports to your services gateway.

Related Documentation

- SRX5800 Services Gateway Physical Specifications on page 3
- SRX5800 Services Gateway Chassis on page 7
- SRX5800 Services Gateway Card Cage and Slots on page 11
- SRX5800 Services Gateway Component Redundancy on page 5

SRX5800 Services Gateway Physical Specifications

Table 3 on page 4 summarizes the physical specifications for the services gateway chassis.

Copyright © 2014, Juniper Networks, Inc.

Table 3: Physical Specifications

Description		Value
Chassis dimensions	Height	27.75 in. (70.5 cm) high
	Width	17.37 in. (44.1 cm) wide
	Depth, with standard-capacity power supplies	23.0 in. (58.4 cm) deep from front-mounting bracket to chassis rear 27.8 in. (70.6 cm) total depth including cable management system
	Depth, with high-capacity AC power supplies	25.5 in. (64.8 cm) deep from front-mounting bracket to chassis rear 30.3 in. (77.0 cm) total depth including cable management system
	Depth, with high-capacity DC power supplies	27.8 in. (70.6 cm) deep from front-mounting bracket to chassis rear 32.6 in. (82.8 cm) total depth including cable management system
Services gateway weight		Chassis with midplane, fan tray, air filter, and cable manager: 150 lb (60.4 kg) Maximum configuration: 400 lb (182 kg)
Routing Engine weight		2.4 lb (1.1 kg)
SCB weight		9.6 lb (4.4 kg)
MPC weight (with two MICs)		13.1 lb (5.9 kg)
IOC weight		13.1 lb (5.9 kg)
Craft interface weight		1.1 lb (0.5 kg)
Fan tray weight		4.2 lb (1.9 kg)
Air filter weight		1.0 lb (0.5 kg)
Cable management weight		0.3 lb (0.14 kg)
Standard-capacity DC power supply weight		3.8 lb (1.7 kg)
High-capacity DC power supply weight		12.0 lb (5.5 kg)
Standard-capacity AC power supply weight		5.0 lb (2.3 kg)
High-capacity AC power supply weight		12.0 lb (5.5 kg)

Copyright © 2014, Juniper Networks, Inc.

NOTE: For the weights of specific cards, Routing Engines, or port modules, see the *SRX5400, SRX5600, and SRX5800 Services Gateway Card Guide* at www.juniper.net/techpubs/.

Related Documentation

- SRX5800 Services Gateway Component Redundancy on page 5
- SRX5800 Services Gateway Chassis on page 7
- SRX5800 Services Gateway Host Subsystem Description on page 17
- SRX5800 Services Gateway Craft Interface Overview on page 20
- SRX5800 Services Gateway Power System Overview on page 28
- SRX5800 Services Gateway Cooling System Description on page 41

SRX5800 Services Gateway Component Redundancy

The following major hardware components are redundant:

- Switch Control Boards (SCBs)—The host subsystem consists of a Routing Engine installed in an SCB. The device must have one host subsystem installed. You can install a second SCB for increased throughput, and a third SCB for redundancy. If a second or third SCB is installed, the host subsystem SCB functions as the master and the others function as the backup. If the SCB of the host subsystem fails, one of the other SCBs takes over as the master.

  NOTE: The SRX5800 Services Gateway does not support a redundant SCB (third SCB) card if an SRX5k SPC II (FRU model number: SRX5K-SPC-4-15-320) is installed on the device. If you have installed an SRX5k SPC II on an SRX5800 Services Gateway with a redundant SCB card, make sure to remove the redundant SCB card.

- Power supplies—When powered by standard-capacity AC power supplies, a minimum of three power supplies are required to supply power to a fully configured services gateway. All AC power supplies share the load evenly. The addition of a fourth power supply provides full power redundancy. If one power supply fails in a redundant configuration, the three remaining power supplies provide full power.

  When powered by DC power supplies or high-capacity AC power supplies, two power supplies are required to supply power to a fully configured services gateway. One power supply supports approximately half of the components in the services gateway, and the other power supply supports the remaining components. The installation of two additional power supplies provides full power redundancy. If one or two power supplies fail, the remaining power supplies can provide full power to the services gateway.

- Cooling system—The cooling system has redundant components, which are controlled by the host subsystem. If one of the fans fails, the host subsystem increases the speed of the remaining fans to provide sufficient cooling for the services gateway indefinitely.

Copyright © 2014, Juniper Networks, Inc.

Related Documentation

- SRX5800 Services Gateway Chassis on page 7
- SRX5800 Services Gateway SCB Description on page 17
- SRX5800 Services Gateway Power System Overview on page 28
- SRX5800 Services Gateway Cooling System Description on page 41

Copyright © 2014, Juniper Networks, Inc.

CHAPTER 2

SRX5800 Services Gateway Hardware Components

Nearly all components of the SRX5800 Services Gateway are field-replaceable units (FRUs), including the Switch Control Boards (SCBs), Routing Engine, Services Processing Cards (SPCs), I/O cards (IOCs), power supply, fan tray, and air filter.

- SRX5800 Services Gateway Chassis on page 7
- SRX5800 Services Gateway Rack-Mounting Hardware on page 10
- SRX5800 Services Gateway Card Cage and Slots on page 11
- SRX5800 Services Gateway Midplane Description on page 12
- SRX5800 Services Gateway Interface Card Description on page 13
- SRX5800 Services Gateway SPC Description on page 16
- SRX5800 Services Gateway Host Subsystem Description on page 17
- SRX5800 Services Gateway SCB Description on page 17
- SRX5800 Services Gateway Routing Engine Description on page 19
- SRX5800 Services Gateway Craft Interface on page 20
- SRX5800 Services Gateway Power System Description on page 27
- SRX5800 Services Gateway Cooling System Description on page 41
- SRX5800 Services Gateway Cable Manager Description on page 43

SRX5800 Services Gateway Chassis

The services gateway chassis is a rigid sheet metal structure that houses all the other services gateway components (see Figure 1 on page 8, Figure 2 on page 9, and Figure 3 on page 10). The chassis measures 27.75 in. (70.49 cm) high, 17.37 in. (44.11 cm) wide, and 23.0 in. (58.42 cm) deep (from the front-mounting flanges to the rear of the chassis). The chassis installs in 19-in. equipment racks or telco open-frame racks.

The chassis can be installed in standard 800-mm (or deeper) enclosed cabinets when powered by standard-capacity power supplies, or in 1000-mm (or deeper) enclosed cabinets when powered by high-capacity power supplies.

Up to three services gateways can be installed in one standard (48 U) rack if the rack can handle their combined weight, which can be greater than 1,134 lb (515 kg). See

Copyright © 2014, Juniper Networks, Inc.

"SRX5800 Services Gateway Physical Specifications" on page 3 for physical specifications for the SRX5800 Services Gateway.

Mounting hardware includes front-mounting flanges on the front of the chassis, and two center-mounting brackets attached to the center of the chassis.

WARNING: To meet safety and electromagnetic interference (EMI) requirements and to ensure proper operation, you must properly ground the services gateway chassis before connecting power. See "Grounding the SRX5800 Services Gateway" on page 96 for instructions.

CAUTION: Before removing or installing components of a services gateway, attach an ESD strap to an ESD point and place the other end of the strap around your bare wrist. Failure to use an ESD strap can result in damage to the services gateway.

Figure 1: Front View of a Fully Configured Services Gateway Chassis

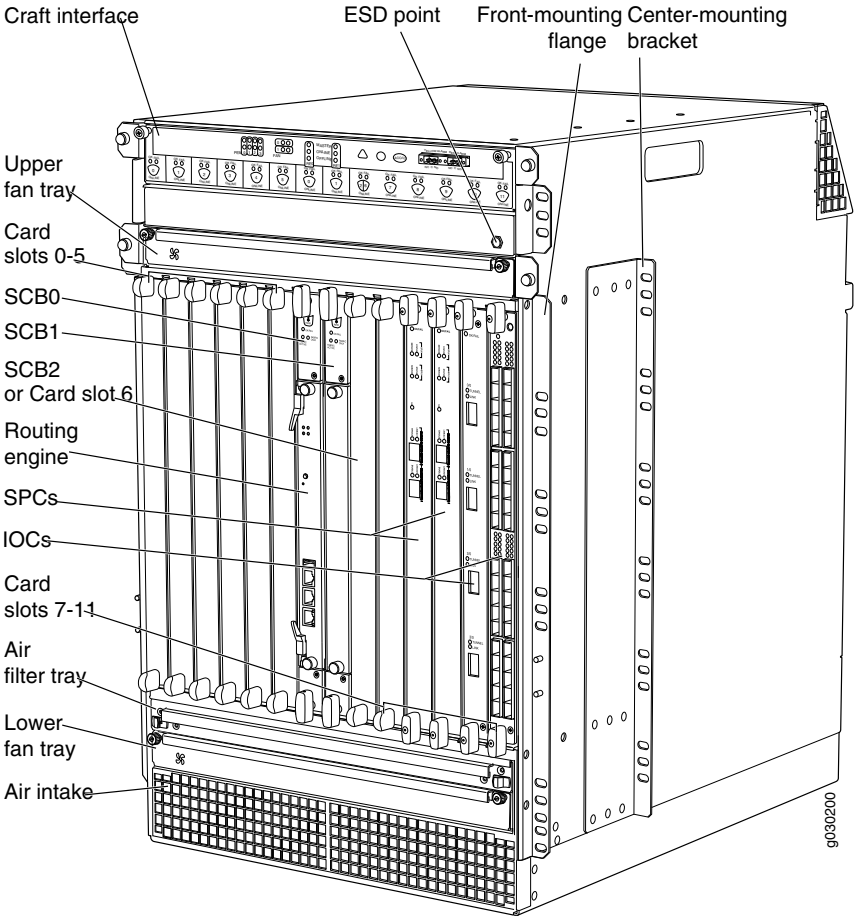

Copyright © 2014, Juniper Networks, Inc.

Figure 2: Rear View of a Fully Configured AC-Powered Services Gateway Chassis

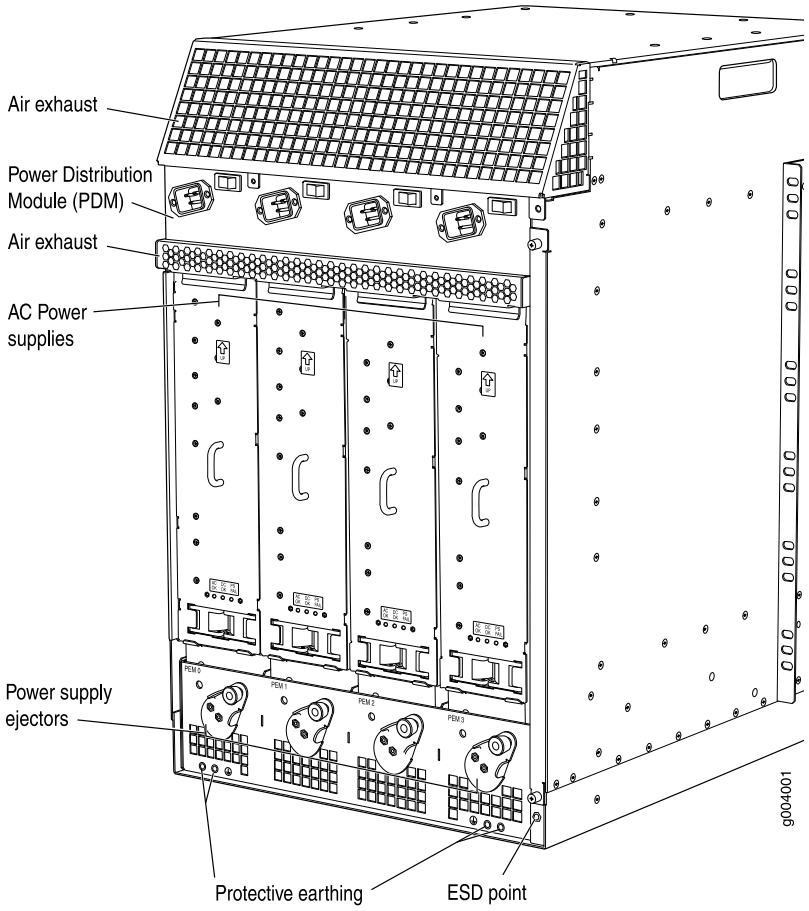

Figure 3: Rear View of a Fully Configured DC-Powered Services Gateway Chassis

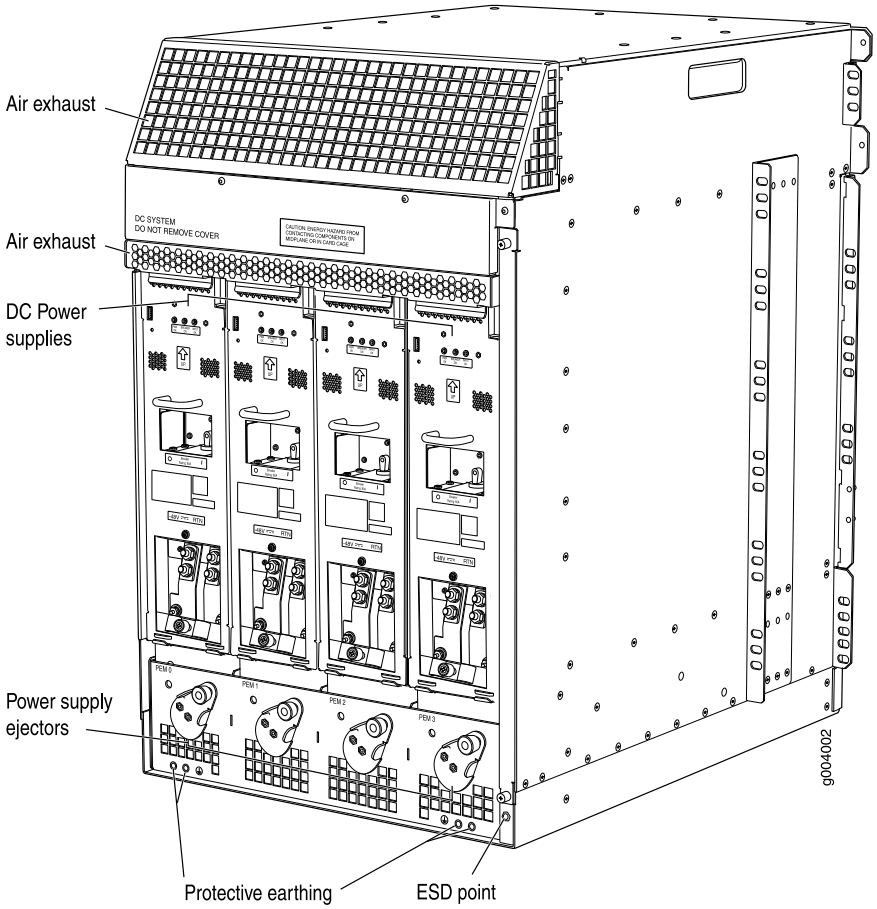

Related Documentation

- Preventing Electrostatic Discharge Damage to the SRX5800 Services Gateway on page 241
- SRX5800 Services Gateway Physical Specifications on page 3
- SRX5800 Services Gateway Power System Overview on page 28
- SRX5800 Services Gateway Card Cage and Slots on page 11
- SRX5800 Services Gateway Cooling System Description on page 41
- General Electrical Safety Guidelines and Warnings on page 260

SRX5800 Services Gateway Rack-Mounting Hardware

The rack-mounting hardware for the SRX5800 Services Gateway includes:

- The large mounting shelf for mounting in four-post racks, cabinets, and open-frame racks
- The small mounting shelf for front-mounting in a four-post rack or cabinet

Copyright © 2014, Juniper Networks, Inc.

- Front-mounting flanges on the front of the chassis for front-mounting in a four-post rack or cabinet
- Two center-mounting brackets attached to the center of the chassis for center-mounting in an open-frame rack. For an open-frame rack, center-mounting is preferable because of the more even distribution of weight.

Related Documentation

- Installing the SRX5800 Services Gateway Mounting Hardware for a Four-Post Rack or Cabinet on page 63
- Installing the SRX5800 Services Gateway Mounting Hardware in an Open-Frame Rack on page 65
- SRX5800 Services Gateway Chassis on page 7
- Chassis Lifting Guidelines on page 244

SRX5800 Services Gateway Card Cage and Slots

The card cage is the set of 14 vertical slots in the front of the chassis where you install cards. The slots are numbered from left to right. Table 4 on page 11 describes the types of cards that you can install into each slot.

Table 4: SRX5800 Services Gateway Card Cage Slots

Card Cage Slot	Eligible Cards		
	SPC	IOC, Flex IOC, or MPC	SCB
0 leftmost)	X	X	
1	X	X	
2	X	X	
3	X	X	
4	X	X	
5	X	X	
0			X
1			X
2/6	X	X	X
7	X	X	
8	X	X	
9	X	X	

Copyright © 2014, Juniper Networks, Inc.

Table 4: SRX5800 Services Gateway Card Cage Slots *(continued)*

Card Cage Slot	Eligible Cards		
	SPC	IOC, Flex IOC, or MPC	SCB
10	X	X	
11 (rightmost)	X	X	

Related Documentation

- SRX5800 Services Gateway Midplane Description on page 12

SRX5800 Services Gateway Midplane Description

The midplane is located toward the rear of the chassis and forms the rear of the card cage (see Figure 4 on page 13). IOCs, SPCs, and SCBs install into the midplane from the front of the chassis, and the power supplies install into the midplane from the rear of the chassis. The cooling system components also connect to the midplane.

The midplane performs the following major functions:

- Data path—Data packets are transferred across the midplane between the IOCs and SPCs through the fabric ASICs on the SCBs.
- Power distribution—The power supplies are connected to the midplane, which distributes power to all the services gateway components.
- Signal path—The midplane provides the signal path to the IOCs, SCBs, SPCs, Routing Engine, and other system components for monitoring and control of the system.

Copyright © 2014, Juniper Networks, Inc.

Figure 4: Midplane

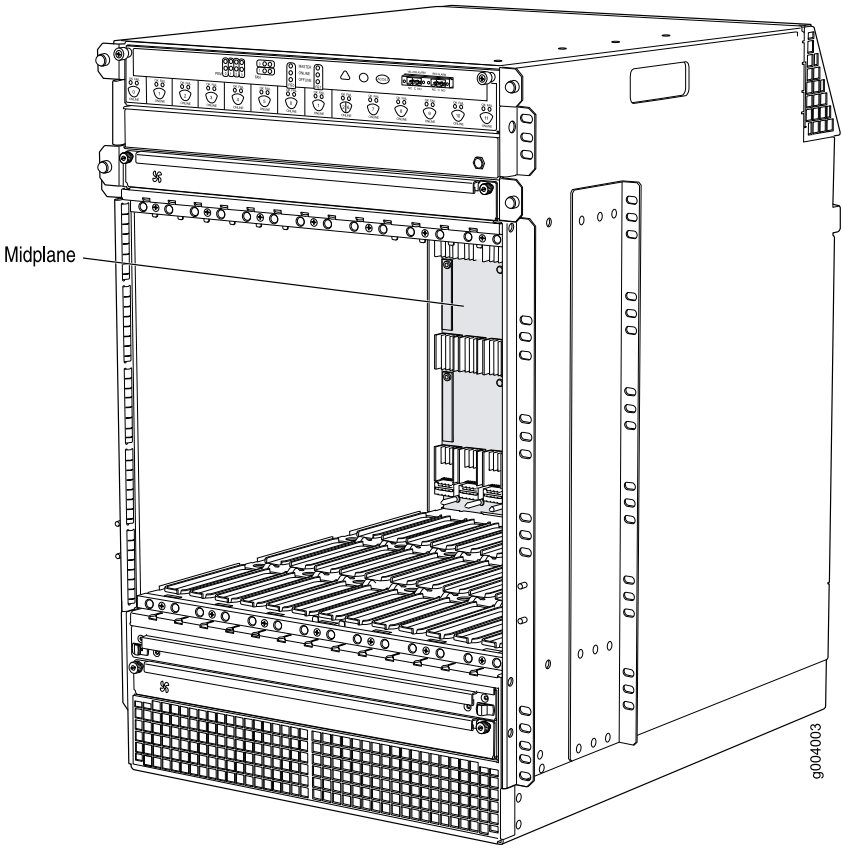

Related Documentation

- SRX5800 Services Gateway Chassis on page 7
- SRX5800 Services Gateway Card Cage and Slots on page 11
- SRX5800 Services Gateway Interface Card Description on page 13
- SRX5800 Services Gateway SCB Description on page 17
- SRX5800 Services Gateway Power System Overview on page 28

SRX5800 Services Gateway Interface Card Description

Interface cards are cards that support physical interfaces that you use to connect the services gateway to your data network. Three different types of interface cards are available:

- I/O Cards (IOCs) have fixed interface ports on the front panel of the card.
- Flex I/O Cards (Flex IOCs) have slots on the front panel that accept smaller cards called port modules. Each port module has two or more physical interfaces on it. A Flex IOC with installed port modules functions in the same way as a regular IOC, but allows greater flexibility in adding different types of Ethernet ports to your services gateway.

Copyright © 2014, Juniper Networks, Inc.

- Modular Port Concentrators (MPCs) have slots on the front panel that accept smaller cards called Modular Interface Cards (MICs). Each MIC has one or more physical interface on it. An MPC with MICs installed functions in the same way as a regular I/O card (IOC), but allows greater flexibility in adding different types of Ethernet ports to your services gateway. MPCs and MICs are similar in form and function to Flex IOCs and port modules. However, the two use different form-factors, so you cannot install port modules in an MPC, nor can you install MICs in a Flex IOC.

For all interface card types, the card assembly combines packet forwarding and Ethernet interfaces on a single board. The interface cards interface with the power supplies and Switch Control Boards (SCBs).

You can install interface cards in any of the slots that are not reserved for SCBs. If a slot is not occupied by a card, you must install a blank panel to shield the empty slot and to allow cooling air to circulate properly through the services gateway.

Figure 5 on page 14 shows typical IOCs supported on the services gateway.

Figure 5: Typical IOCs

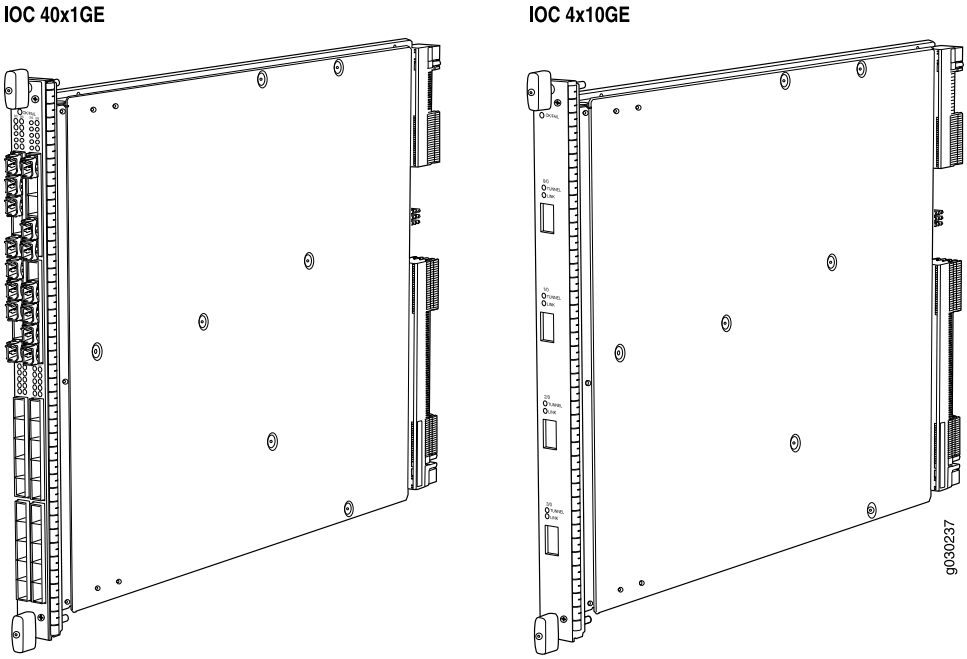

Figure 6 on page 15 shows a Flex IOC with two typical port modules installed.

Copyright © 2014, Juniper Networks, Inc.

Figure 6: Flex IOC with Port Modules

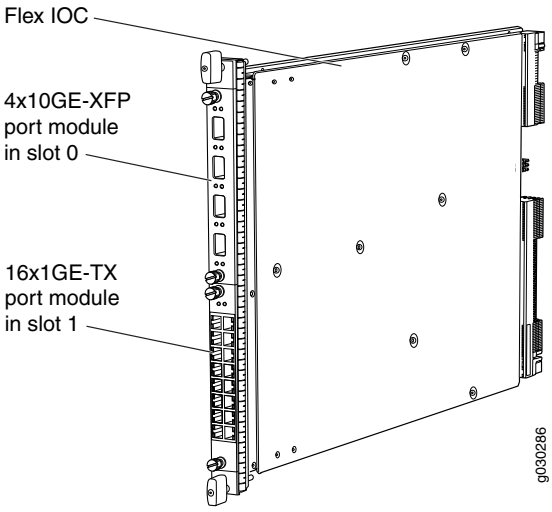

Figure 7 on page 15 shows an MPC.

Figure 7: SRX5K-MPC

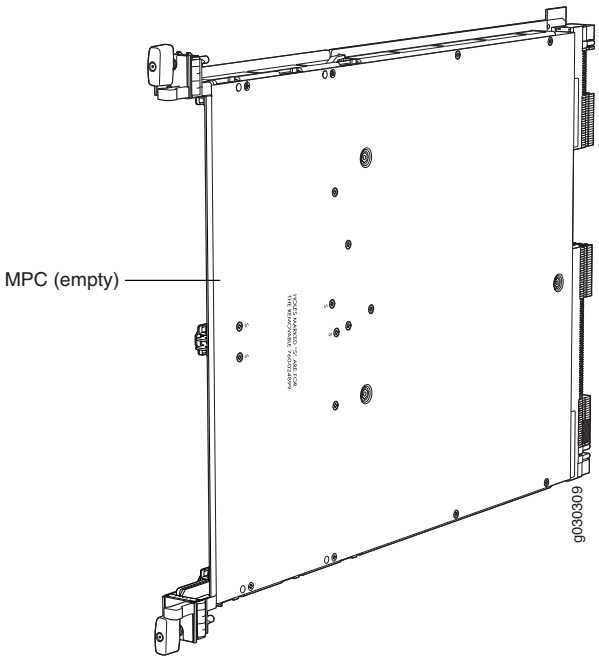

For detailed information about the interface cards, port modules, and MICs supported by the services gateway, see the *SRX5400, SRX5600, and SRX5800 Services Gateway Card Reference* at www.juniper.net/techpubs/.

Related Documentation

- Replacing SRX5800 Services Gateway IOCs on page 168
- Replacing SRX5800 Services Gateway Flex IOCs on page 173
- Replacing SRX5800 Services Gateway MPCs on page 181

Copyright © 2014, Juniper Networks, Inc.

- SRX5800 Services Gateway Card Cage and Slots on page 11
- SRX5800 Services Gateway Field-Replaceable Units on page 146

SRX5800 Services Gateway SPC Description

Each Services Processing Card (SPC) contains four Services Processing Units (SPUs), which provide the processing power to run integrated services such as firewall, IPsec, and IDP (see Figure 8 on page 16). All traffic traversing the services gateway is passed to an SPU to have services processing applied to it. Traffic is intelligently distributed by interface cards to SPUs for services processing.

The services gateway must have one SPC installed.

You can install an SPC in any of the slots that are not reserved for Switch Control Board (SCB). If a slot is not occupied by a card, you must install a blank panel to shield the empty slot and to allow cooling air to circulate properly through the device.

Figure 8 on page 16 shows a typical SPC supported on the services gateway.

Figure 8: Typical SPC

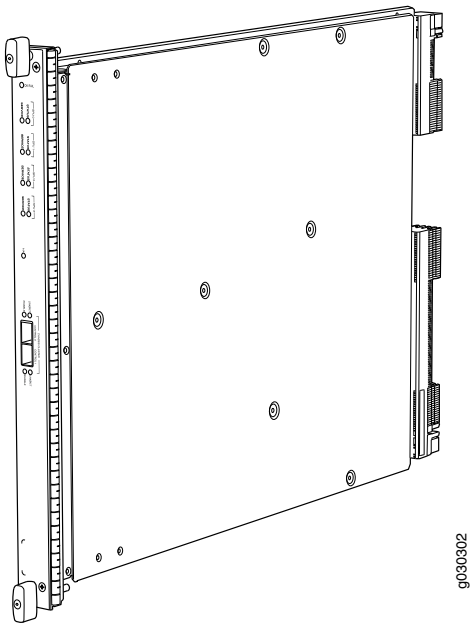

For detailed information about SPCs supported by the services gateway, see the *SRX5400, SRX5600, and SRX5800 Services Gateway Card Reference* at www.juniper.net/techpubs/.

Related Documentation

- SRX5800 Services Gateway Card Cage and Slots on page 11
- SRX5800 Services Gateway Field-Replaceable Units on page 146
- Maintaining Interface Cards and SPCs on the SRX5600 Services Gateway on page 125
- Troubleshooting SRX5800 Services Gateway SPCs on page 141

Copyright © 2014, Juniper Networks, Inc.

- Replacing SRX5800 Services Gateway SPCs on page 196

SRX5800 Services Gateway Host Subsystem Description

The host subsystem is composed of a Routing Engine installed in a Switch Control Board (SCB). The host subsystem provides the routing and system management functions of the services gateway. You must install one host subsystem on the device.

The host subsystem has three LEDs that display its status. The host subsystem LEDs are located in the middle of the craft interface.

Related Documentation

- SRX5800 Services Gateway Craft Interface Host Subsystem LEDs on page 22
- SRX5800 Services Gateway SCB Description on page 17
- SRX5800 Services Gateway Routing Engine Description on page 19
- SRX5800 Services Gateway Card Cage and Slots on page 11

SRX5800 Services Gateway SCB Description

The Switch Control Board (SCB) provides the following functions:

- Powers on and powers off IOCs and SPCs
- Controls clocking, system resets, and booting
- Monitors and controls system functions, including fan speed, board power status, PDM status and control, and the system front panel
- Provides interconnections to all the IOCs within the chassis through the switch fabrics integrated into the SCB

When the SCB is part of a host subsystem, the Routing Engine installs directly into a slot on the SCB (see Figure 9 on page 18).

Copyright © 2014, Juniper Networks, Inc.

Figure 9: SCB

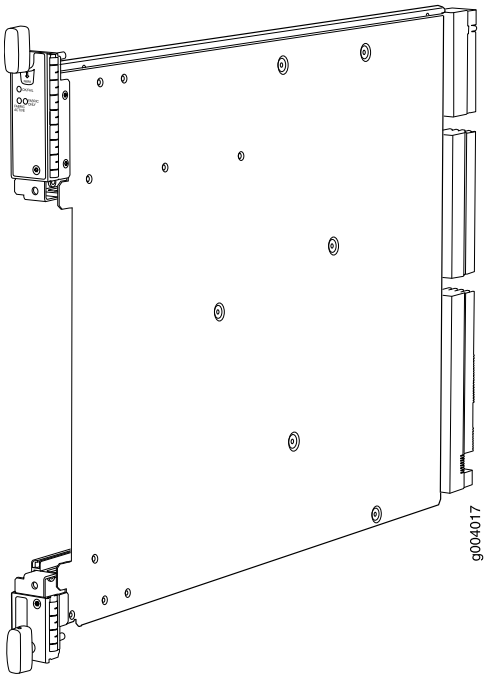

You must install at least one SCB in the services gateway as part of a host subsystem. You can install a second SCB for increased throughput, and a third SCB for redundancy.

NOTE: The SRX5800 Services Gateway does not support a redundant SCB (third SCB) card if an SRX5k SPC II (FRU model number: SRX5K-SPC-4-15-320) is installed on the device. If you have installed an SRX5k SPC II on an SRX5800 Services Gateway with a redundant SCB card, make sure to remove the redundant SCB card.

SCBs install vertically into the front of the chassis. The SCB slots are located at the middle of the card cage and are labeled **0**, **1**, and **2/6**. If any slots are empty, you must install a blank panel.

SCBs installed in slots **0** and **1** provide nonredundant fabric connections. An SCB installed in slot **2/6**, in conjunction with SCBs in slots **0** and **1**, provides redundant fabrics. If no SCB is installed in slot **2/6**, you must install a blank panel in the slot (see Table 5 on page 18).

Table 5: SCB Slot Mapping and Functionality

Functionality	Slot 0	Slot 1	Slot 2/6
Full fabric	SCB Routing Engine	SCB	–

Copyright © 2014, Juniper Networks, Inc.

Table 5: SCB Slot Mapping and Functionality *(continued)*

Functionality	Slot 0	Slot 1	Slot 2/6
Redundant fabric	SCB Routing Engine	SCB	SCB

For detailed information about SCBs supported by the SR5800 Services Gateway, see the *SRX5400, SRX5600, and SRX5800 Services Gateway Card Guide* at www.juniper.net/techpubs/.

Related Documentation

- SRX5800 Services Gateway Card Cage and Slots on page 11
- Maintaining the SRX5800 Services Gateway Host Subsystem and SCBs on page 123
- Replacing an SRX5800 Services Gateway SCB on page 158

SRX5800 Services Gateway Routing Engine Description

The Routing Engine is an Intel-based PC platform that runs Junos OS. Software processes that run on the Routing Engine maintain the routing tables, manage the routing protocols used on the device, control the device interfaces, control some chassis components, and provide the interface for system management and user access to the device.

You must install at least one Routing Engine in the services gateway. You can install a second Routing Engine if both Routing Engines are running Junos OS Release 10.0 or later.

A second Routing Engine is required if you are using the dual chassis cluster control link feature available in Junos OS Release 10.0 and later. The second Routing Engine does not perform all the functions of a Routing Engine and does not improve resiliency or redundancy. The second Routing Engine and the Switch Control Board (SCB) in which it is installed do not constitute a host subsystem. The only function of the second Routing Engine is to enable the hardware infrastructure that enables the **Chassis Cluster Control 1** port on the Services Processing Card (SPC) used for chassis cluster control links.

If you install only one Routing Engine in the services gateway, you must install it in the slot in the front panel of SCB0. If you install a second Routing Engine to use the dual chassis cluster control link feature, you install it in the slot in the front panel of SCB1.

A USB port on the Routing Engine accepts a USB memory card that allows you to load Junos OS.

Copyright © 2014, Juniper Networks, Inc.

Figure 10: Routing Engine

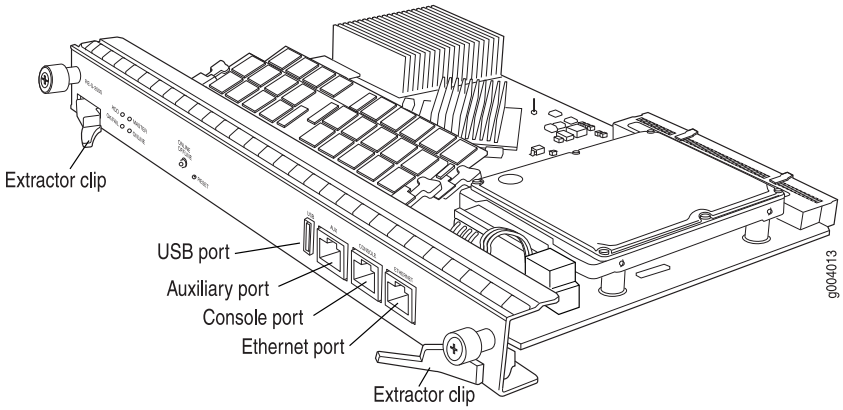

For detailed information about the Routing Engines supported by the services gateway, see the *SRX5400, SRX5600, and SRX5800 Services Gateway Card Reference* at www.juniper.net/techpubs/.

Related Documentation

- Replacing the SRX5800 Services Gateway Routing Engine on page 162

SRX5800 Services Gateway Craft Interface

- SRX5800 Services Gateway Craft Interface Overview on page 20
- SRX5800 Services Gateway Craft Interface Alarm LEDs and Alarm Cutoff/Lamp Test Button on page 21
- SRX5800 Services Gateway Craft Interface Host Subsystem LEDs on page 22
- SRX5800 Services Gateway Craft Interface Power Supply LEDs on page 23
- SRX5800 Services Gateway Craft Interface Card OK/Fail LEDs on page 23
- SRX5800 Services Gateway Craft Interface Fan LEDs on page 24
- SRX5800 Services Gateway Craft Interface Online Buttons on page 24
- SRX5800 Services Gateway Craft Interface Alarm Relay Contacts on page 26

SRX5800 Services Gateway Craft Interface Overview

The craft interface shows you status and troubleshooting information at a glance and lets you perform many system control functions. It is hot-insertable and hot-removable. The craft interface is located on the front of the services gateway above the upper fan tray.

Copyright © 2014, Juniper Networks, Inc.

Figure 11: Front Panel of the Craft Interface

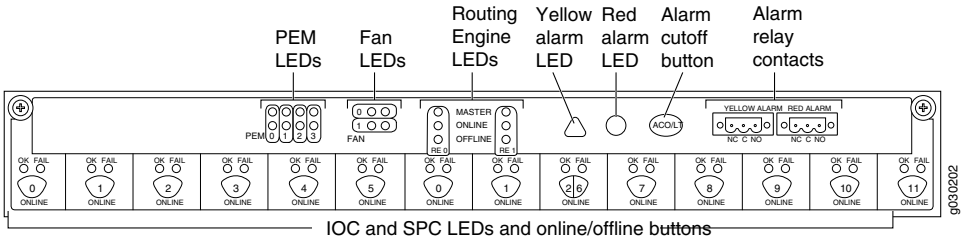

NOTE: The craft interface draws its power from the SCBs installed in the SCB slots 0, 1, and 2 at the center of the card cage. At least one SCB must be installed in the services gateway for the craft interface to obtain power.

Related Documentation

- SRX5800 Services Gateway Craft Interface Alarm LEDs and Alarm Cutoff/Lamp Test Button on page 21
- SRX5800 Services Gateway Craft Interface Host Subsystem LEDs on page 22
- SRX5800 Services Gateway Craft Interface Power Supply LEDs on page 23
- SRX5800 Services Gateway Craft Interface Card OK/Fail LEDs on page 23
- SRX5800 Services Gateway Craft Interface Fan LEDs on page 24
- SRX5800 Services Gateway Craft Interface Online Buttons on page 24
- SRX5800 Services Gateway Craft Interface Alarm Relay Contacts on page 26
- Replacing the SRX5800 Services Gateway Craft Interface on page 148

SRX5800 Services Gateway Craft Interface Alarm LEDs and Alarm Cutoff/Lamp Test Button

Two large alarm LEDs are located at the upper right of the craft interface. The circular red LED lights to indicate a critical condition that can result in a system shutdown. The triangular yellow LED lights to indicate a less severe condition that requires monitoring or maintenance. Both LEDs can be lit simultaneously. A condition that causes an LED to light also activates the corresponding alarm relay contact on the craft interface.

To deactivate the red and yellow alarms, press the button labeled **ACO/LT** (for “alarm cutoff/lamp test”), which is located to the right of the alarm LEDs. Deactivating an alarm turns off both LEDs and deactivates the device attached to the corresponding alarm relay contact on the craft interface.

Copyright © 2014, Juniper Networks, Inc.

Table 6 on page 22 describes the alarm LEDs and alarm cutoff button in more detail.

Table 6: Alarm LEDs and Alarm Cutoff/Lamp Test Button

Shape	Color	State	Description
	Red	On steadily	Critical alarm LED—Indicates a critical condition that can cause the device to stop functioning. Possible causes include component removal, failure, or overheating.
	Yellow	On steadily	Warning alarm LED—Indicates a serious but nonfatal error condition, such as a maintenance alert or a significant increase in component temperature.
	–	–	Alarm cutoff/lamp test button—Deactivates red and yellow alarms. Causes all LEDs on the craft interface to light (for testing) when pressed and held.

Related Documentation

- SRX5800 Services Gateway Craft Interface Alarm Relay Contacts on page 26
- SRX5800 Services Gateway Craft Interface Overview on page 20
- SRX5800 Services Gateway Craft Interface Host Subsystem LEDs on page 22

SRX5800 Services Gateway Craft Interface Host Subsystem LEDs

The host subsystem has three LEDs, located in the middle of the craft interface, that indicate its status. The LEDs labeled **RE0** show the status of the Routing Engine and SCB in slot **0** .

The LEDs labeled **RE1** show the status of the Routing Engine and SCB in slot **1**.
Table 7 on page 22 describes the functions of the host subsystem LEDs.

Table 7: Host Subsystem LEDs

Label	Color	State	Description
MASTER	Green	On steadily	Host is functioning as the master.
ONLINE	Green	On steadily	Host is online and is functioning normally.
OFFLINE	Red	On steadily	Host is installed but the Routing Engine is offline.
		Off	Host is not installed.

Related Documentation

- SRX5800 Services Gateway Craft Interface Overview on page 20
- SRX5800 Services Gateway Craft Interface Alarm LEDs and Alarm Cutoff/Lamp Test Button on page 21
- SRX5800 Services Gateway Craft Interface Power Supply LEDs on page 23

Copyright © 2014, Juniper Networks, Inc.

SRX5800 Services Gateway Craft Interface Power Supply LEDs

Each power supply has two LEDs on the craft interface that indicate its status. The LEDs, labeled **0** through **3**, are located near the middle of the craft interface next to the **PEM** label. Table 8 on page 23 describes the functions of the power supply LEDs on the craft interface.

Table 8: Power Supply LEDs on the Craft Interface

Label	Color	State	Description
PEM	Green	On steadily	Power supply is functioning normally.
	Red	On steadily	Power supply has failed or power input has failed.

Related Documentation

- SRX5800 Services Gateway Craft Interface Overview on page 20
- SRX5800 Services Gateway Craft Interface Host Subsystem LEDs on page 22
- SRX5800 Services Gateway Craft Interface Card OK/Fail LEDs on page 23

SRX5800 Services Gateway Craft Interface Card OK/Fail LEDs

Each slot in the card cage has a pair of LEDs on the craft interface that indicates the status of the card installed in it. The card LEDs are located along the bottom edge of the craft interface and are labeled as follows:

- **0** through **5** on the left
- **0** and **1** for the two center slots reserved for SCBs
- **2/6** and **7** through **11** on the right

Table 9 on page 23 describes the functions of the **OK** and **Fail** LEDs.

Table 9: Card OK/Fail LEDs

Label	Color	State	Description
OK	Green	On steadily	The card is functioning normally.
		Blinking	The card is transitioning online or offline.
		Off	The card is not online.
FAIL	Red	On steadily	The card has failed.

Related Documentation

- SRX5800 Services Gateway Craft Interface Overview on page 20
- SRX5800 Services Gateway Craft Interface Power Supply LEDs on page 23
- SRX5800 Services Gateway Craft Interface Fan LEDs on page 24

Copyright © 2014, Juniper Networks, Inc.

SRX5800 Services Gateway Craft Interface Fan LEDs

Each fan LED is located on the top left of the craft interface. Table 10 on page 24 describes the functions of the fan LEDs.

Table 10: Fan LEDs

Label	Color	State	Description
OK	Green	On steadily	Fan tray is functioning normally.
FAIL	Red	On steadily	Fan tray has failed.

Related Documentation

- SRX5800 Services Gateway Craft Interface Overview on page 20
- SRX5800 Services Gateway Craft Interface Card OK/Fail LEDs on page 23
- SRX5800 Services Gateway Craft Interface Online Buttons on page 24

SRX5800 Services Gateway Craft Interface Online Buttons

The craft interface has a row of Online/Offline buttons along its lower edge. Each button corresponds to one slot in the card cage. The Online/Offline buttons are only supported for slots containing MPC interface cards. You can install MPCs into slots **0/1**, **1**, and **2** only.

NOTE: The Online/Offline buttons are not supported for removal and replacement of SPCs or SCB.

CAUTION: While traffic is passing through the SRX5400 Services Gateway, particularly if the device is configured as part of a high availability (HA) cluster, we strongly recommend that you do not push any of the Online/Offline buttons.

To take an MPC offline using the Online/Offline buttons:

1. Press and hold the corresponding card's Online/Offline button on slot **1** on the craft interface. The green **OK/FAIL** LED next to the button begins to blink. Hold until both the button's LED and the MPC's LED are off.
2. Issue the CLI **show chassis fpc** command to check the status of installed MPCs. As shown in the sample output, the value *Offline* in the column labeled *State* indicates that the MPC in slot **1** is now offline:

```
user@host> show chassis fpc
Slot State            (C)  Total  Interrupt      DRAM (MB) Heap     Buffer
  0  Online            35      4          0          1024       13         25
  1  Online            47      3          0          1024       13         25
  2  Online            37      8          0          2048       18         14
```


Copyright © 2014, Juniper Networks, Inc.

```
user@host> request chassis fpc slot 2 offline
node0:
--------------------------------------------------------------------------
Offline initiated, use "show chassis fpc" to verify

{primary:node0}

user@host> show chassis fpc
node0:
--------------------------------------------------------------------------
                     Temp  CPU Utilization (%)   Memory    Utilization (%)
Slot State            (C)  Total  Interrupt      DRAM (MB) Heap     Buffer
  0  Online            35      7          0       1024       13         25
  1  Online            46      4          0       1024       13         25
  2  Offline         ---Offlined by cli command---

After pushing MPC online button:

user@host> show chassis fpc
                     Temp  CPU Utilization (%)   Memory    Utilization (%)
Slot State            (C)  Total  Interrupt      DRAM (MB) Heap     Buffer
  0  Online            34      5          0       1024       13         25
  1  Online            46      3          0       1024       13         25
  2  Offline         ---Offlined by button press---
```

To bring an MPC back online using the Online/Offline buttons:

1. Press and hold the corresponding card's Online/Offline button on slot **1** on the craft interface. The green **OK/FAIL** LED next to the button and the MPC's LED begins to blink. Hold until both the button's LED and the MPC's LED are green and steady.
2. Issue the CLI **show chassis fpc** command to check the status of installed MPCs. As shown in the sample output, the value *Online* in the column labeled *State* indicates that the MPC in slot **1** is functioning normally:

```
user@host> show chassis fpc
Slot State            (C)  Total  Interrupt      DRAM (MB) Heap     Buffer
  0  Online            35      4          0       1024       13         25
  1  Online            47      3          0       1024       13         25
  2  Online            37      8          0       2048       18         14


user@host> request chassis fpc slot 2 offline
node0:
--------------------------------------------------------------------------
Offline initiated, use "show chassis fpc" to verify

{primary:node0}

user@host> show chassis fpc
node0:
--------------------------------------------------------------------------
                     Temp  CPU Utilization (%)   Memory    Utilization (%)
Slot State            (C)  Total  Interrupt      DRAM (MB) Heap     Buffer
  0  Online            35      7          0       1024       13         25
  1  Online            46      4          0       1024       13         25
  2  Offline         ---Offlined by cli command---

After pushing MPC online button:

user@host> show chassis fpc
```

Copyright © 2014, Juniper Networks, Inc.

```
                                Temp  CPU Utilization (%)   Memory    Utilization (%)
Slot State                       (C)  Total  Interrupt      DRAM (MB) Heap     Buffer
  0  Online                       34      5          0       1024       13         25
  1  Online                       46      3          0       1024       13         25
  2  Offline                 ---Offlined by button press---
```

Related Documentation

- SRX5800 Services Gateway Craft Interface Overview on page 20
- SRX5800 Services Gateway Craft Interface Fan LEDs on page 24
- SRX5800 Services Gateway Craft Interface Alarm Relay Contacts on page 26

SRX5800 Services Gateway Craft Interface Alarm Relay Contacts

The craft interface has two alarm relay contacts for connecting the device to external alarm devices (see Figure 12 on page 26). Whenever a system condition triggers either the major or minor alarm on the craft interface, the alarm relay contacts are also activated. The alarm relay contacts are located on the upper right of the craft interface.

Figure 12: Alarm Relay Contacts

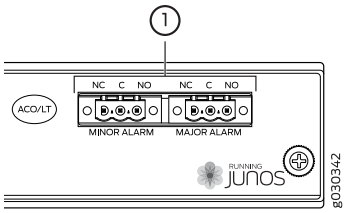

The alarm relay contacts consist of two sets of connectors, one set for each of the two alarms (major and minor). For each alarm color there are three connectors. Table 11 on page 26 describes the functions of the connectors.

Table 11: Alarm Relay Contact Functions

Contact Label	Contact Name	Function
NC	Normally Closed	Connects the alarm relay to an external alarm-reporting device that activates when the circuit between C and NC is closed.
C	Current In	Connects the alarm relay to the current source for the external alarm-reporting device.
NO	Normally Open	Connects the alarm relay to an external alarm-reporting device that activates when the circuit between C and NC is open.

Copyright © 2014, Juniper Networks, Inc.

Table 12 on page 27 shows the electrical specifications for the alarm relay contacts.

Table 12: Alarm Relay Contact Electrical Specifications

	Current Type	
	AC	DC
Maximum Voltage	250	30
Maximum Current	8 A	

Figure 13 on page 27 shows an example wiring diagram for a simple alarm reporting device. In this case the device is a 12-volt light bulb that illuminates when the device encounters a condition that activates the major alarm LED and relay contacts. The alarm relay contacts can also be used to activate other devices such as bells or buzzers.

Figure 13: Example Alarm Reporting Device

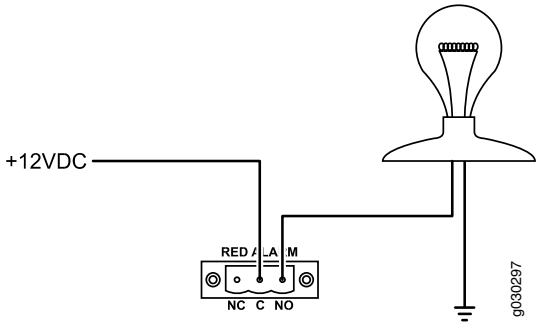

Related Documentation

- SRX5800 Services Gateway Craft Interface Overview on page 20
- SRX5800 Services Gateway Craft Interface Online Buttons on page 24
- Connecting an SRX5800 Services Gateway to an External Alarm-Reporting Device on page 90
- Alarm Relay Contact Wire Specifications for the SRX5800 Services Gateway on page 298

SRX5800 Services Gateway Power System Description

- SRX5800 Services Gateway Power System Overview on page 28
- SRX5800 Services Gateway High-Capacity AC Power Supply on page 31
- SRX5800 Services Gateway High-Capacity AC Power Supply LEDs on page 33
- SRX5800 Services Gateway Standard-Capacity AC Power Supply on page 34
- SRX5800 Services Gateway Standard-Capacity AC Power Supply LEDs on page 35
- SRX5800 Services Gateway High-Capacity DC Power Supply on page 36
- SRX5800 Services Gateway High-Capacity DC Power Supply LEDs on page 38

Copyright © 2014, Juniper Networks, Inc.

- SRX5800 Services Gateway Standard-Capacity DC Power Supply on page 39
- SRX5800 Services Gateway Standard-Capacity DC Power Supply LEDs on page 40

SRX5800 Services Gateway Power System Overview

The SRX5800 Services Gateway uses either AC or DC power supplies. The services gateway is configurable with two to four AC power supplies or two or four DC power supplies. The power supplies connect to the midplane, which distributes the different output voltages produced by the power supplies to the services gateway components, depending on their voltage requirements.

Table 13 on page 28 describes the different types of power supplies available.

Table 13: Power Supply Type Summary

Power Supply Type	Input Condition (If Any)	Maximum Output	Redundancy	Power Distribution
AC standard-capacity		1700 W	3+1	Shared
AC high-capacity	One AC input	1700 W	2+2	Zoned
	Two AC inputs	4100 W		
DC standard-capacity		1700 W		
DC high-capacity	One DC input	1700 W		
High-capacity DC	Two DC inputs	4100 W		

NOTE: The services gateway must be running Junos OS Release 10.4 or later in order to use high-capacity AC power supplies. The services gateway must be running Junos OS Release 12.1X44-D10 or later in order to use high-capacity DC power supplies.

All power supplies are hot-removable and hot-insertable. Each power supply is cooled by its own internal cooling system.

NOTE: Devices configured from the factory with DC power supplies are shipped with a blank panel installed over the power distribution modules. Devices configured with AC power supplies have no blank panel.

CAUTION: The services gateway cannot be powered from AC and DC power supplies simultaneously. The first type of power supply detected by the services gateway when initially powered on determines the type of power supply allowed by the services gateway. All installed power supplies of the

Copyright © 2014, Juniper Networks, Inc.

other type are disabled by the services gateway. If you install a power supply of the other type while the services gateway is operating, the services gateway disables the power supply and generates an alarm.

When the services gateway is powered by standard-capacity AC power supplies, the services gateway contains either three or four AC power supplies, located at the rear of the chassis in slots **PEM0** through **PEM3** (left to right). Each power supply provides power to all components in the services gateway. When three power supplies are present, they share power almost equally within a fully populated system. Four power supplies provide full power redundancy. If one power supply fails or is removed, the remaining power supplies instantly assume the entire electrical load without interruption. Three power supplies provide the maximum configuration with full power for as long as the services gateway is operational.

When the services gateway is powered by either standard- or high-capacity DC power supplies, or by high-capacity AC power supplies, power distribution within the chassis is divided into zones, as described in Table 14 on page 29.

Table 14: SRX5800 Services Gateway Power Distribution (DC or High-Capacity AC Power Supplies)

Zone	Power Supplies	Provide Power To:
Zone 0	• PEM0 • PEM2	• Lower fan tray • IOC or SPC slots 6 through 11 • SCB slots 1 and 2
Zone 1	• PEM1 • PEM3	• Upper fan tray • IOC or SPC slots 0 through 5 • SCB slot 0

Figure 14 on page 30 shows the distribution of power from the power supplies to the chassis components in an SRX5800 Services Gateway chassis powered by DC power supplies or high-capacity AC power supplies.

Copyright © 2014, Juniper Networks, Inc.

Figure 14: Power Distribution from DC and High-Capacity AC Power Supplies in the SRX5800 Services Gateway Chassis

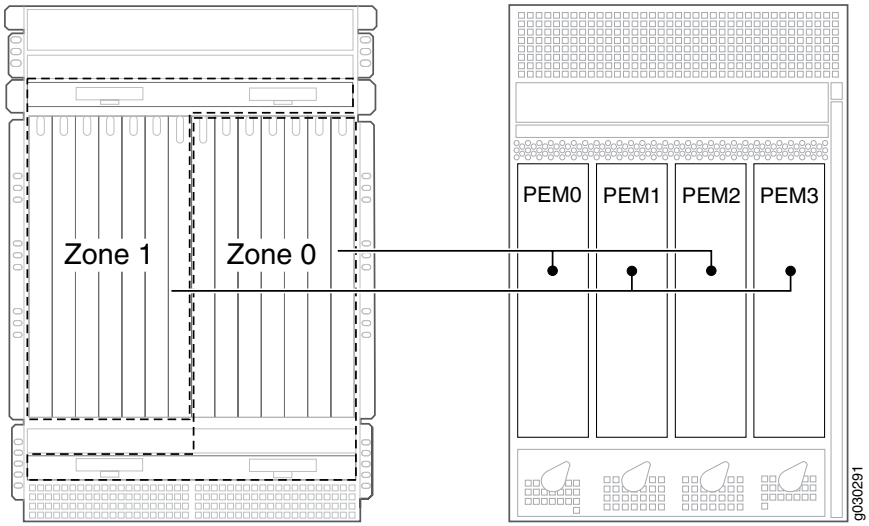

NOTE: The craft interface draws its power from the SCBs installed in the SCB slots 0, 1, and 2 at the center of the card cage. In the standard configuration, with SCBs in slots 0 and 1, the craft interface is powered on even when one of the two zones loses power. But if the chassis only has one SCB installed, the craft interface draws all of its power from that card, and consequently is powered off if the zone in which that SCB is installed loses power.

You can install either two or four DC power supplies or high-capacity AC power supplies. Two power supplies are required to power the two zones, while four power supplies provide full redundancy for both zones. The power supplies in slots **PEM0** and **PEM2** form a redundant pair, as do the power supplies in slots **PEM1** and **PEM3**. When two power supplies are installed for a zone, they share the load. If a power supply fails, its redundant power supply assumes the full load of that zone without interruption.

If you do install only two power supplies, they must be installed so that one is in an odd-numbered slot and the other is in an even-numbered slot. For example, you can install one high-capacity AC power supply in each of the slots **PEM0** and **PEM1**.

Related Documentation

- Calculating Power Requirements for the SRX5800 Services Gateway on page 275
- SRX5800 Services Gateway Standard-Capacity AC Power Supply on page 34
- SRX5800 Services Gateway Standard-Capacity DC Power Supply on page 39
- SRX5800 Services Gateway High-Capacity AC Power Supply on page 31
- SRX5800 Services Gateway High-Capacity DC Power Supply on page 36
- Troubleshooting the SRX5800 Services Gateway Power System on page 142
- Installing an SRX5800 Services Gateway AC Power Supply on page 214

Copyright © 2014, Juniper Networks, Inc.

- Installing an SRX5800 Services Gateway DC Power Supply on page 219

SRX5800 Services Gateway High-Capacity AC Power Supply

High-capacity AC power supplies provide a maximum of 4100 W of power each. Two high-capacity power supplies are required, and you can install four high-capacity power supplies for redundancy. Each high-capacity AC power supply has two corresponding AC appliance inlets: one located in the chassis directly above the power supply and one located near the top edge of the power supply itself. For each power supply, you connect one power cord to the inlet on the chassis above the power supply and one power cord to the inlet on the power supply itself. Each inlet you connect requires a dedicated AC power feed and a dedicated 15 A (250 VAC) circuit breaker.

NOTE: The services gateway cannot be powered from standard-capacity and high-capacity AC power supplies simultaneously. The one exception is during the process of replacing standard-capacity AC power supplies with high-capacity AC power supplies, when it is permissible to have both types installed briefly.

NOTE: The high-capacity power supply will operate with only one of its two AC inlets connected to an AC power feed. However, its DC output will be limited to a maximum of 1700 W. We recommend that you connect two AC power feeds to each high-capacity AC power supply.

NOTE: The services gateway must be running Junos OS Release 10.4 or later in order to use high-capacity AC power supplies.

Each high-capacity AC power supply has an input mode switch, covered by a small metal plate. The input mode switch tells the system the number of AC power feeds it should expect. The input mode switch settings are described in Table 15 on page 31. The default setting is 1.

Table 15: High-Capacity AC Power Supply Input Mode Switch Settings

Mode Switch Setting	AC Inputs	Result
1	Both AC inlets powered	DC output of 4100 W **DC OK** LED lights
	Only one AC inlet powered	DC output of 1700 W **DC OK** LED lights

Copyright © 2014, Juniper Networks, Inc.

Table 15: High-Capacity AC Power Supply Input Mode Switch Settings *(continued)*

Mode Switch Setting	AC Inputs	Result
0	Both AC inlets powered	DC output of 4100 W **DC OK** LED lights
	Only one AC inlet powered	DC output disabled **DC OK** LED unlit

NOTE: We recommend that you set the input mode switch to 1 and connect two AC input feeds to each high-capacity AC power supply.

WARNING: To meet safety and electromagnetic interference (EMI) requirements and to ensure proper operation, the services gateway chassis must be adequately grounded before power is connected. See "Grounding the SRX5800 Services Gateway" on page 96 for instructions.

Copyright © 2014, Juniper Networks, Inc.

Figure 15: High-Capacity AC Power Supply

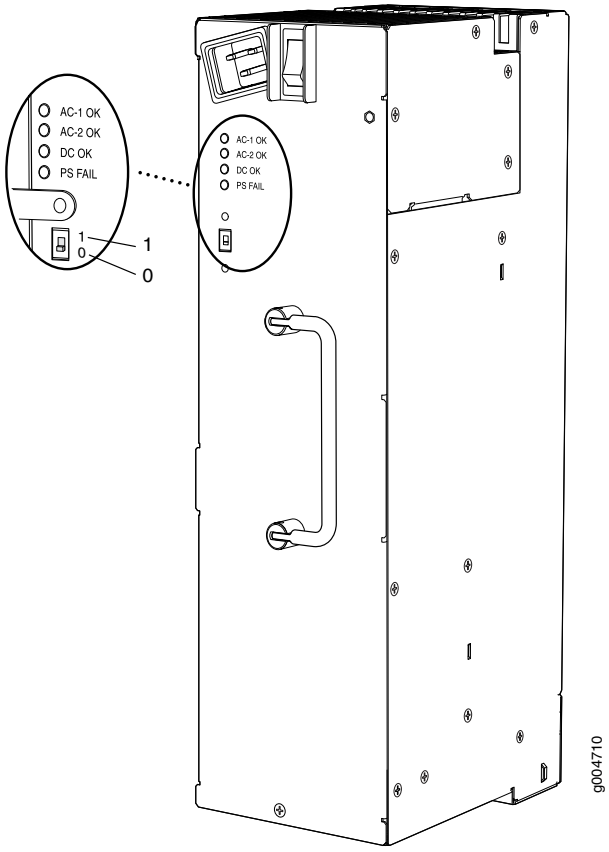

Related Documentation

- Calculating Power Requirements for the SRX5800 Services Gateway on page 275
- SRX5800 Services Gateway High-Capacity AC Power Supply LEDs on page 33
- SRX5800 Services Gateway Power System Overview on page 28

SRX5800 Services Gateway High-Capacity AC Power Supply LEDs

Each high-capacity AC power supply faceplate contains four LEDs that indicate the status of the power supply (see Table 16 on page 34). The power supply status is also reflected in two LEDs on the craft interface. In addition, a power supply failure triggers the red alarm LED on the craft interface.

Copyright © 2014, Juniper Networks, Inc.

Table 16: High-Capacity AC Power Supply LEDs

Label	Color	State	Description
AC-1 OK	Green	Off	AC power applied to power supply at the upper appliance inlet is not within the normal operating range.
		On	AC power applied to power supply at the upper appliance inlet is within the normal operating range.
AC-2 OK	Green	Off	AC power applied to power supply at the lower appliance inlet is not within the normal operating range.
		On	AC power applied to power supply at the lower appliance inlet is within the normal operating range.
DC OK	Green	Off	DC power outputs generated by the power supply are not within the normal operating ranges.
		On	DC power outputs generated by the power supply are within the normal operating ranges.
PS FAIL	Red	Off	Power supply is functioning normally.
		On	Power supply is not functioning normally. Check the **AC-1 OK**, **AC-2 OK**, and **DC OK** LEDs for more information.

Related Documentation

- SRX5800 Services Gateway Craft Interface Power Supply LEDs on page 23
- SRX5800 Services Gateway High-Capacity AC Power Supply on page 31
- SRX5800 Services Gateway Power System Overview on page 28

SRX5800 Services Gateway Standard-Capacity AC Power Supply

Each standard-capacity AC power supply has a corresponding AC appliance inlet located in the chassis directly above the power supply. Each inlet requires a dedicated AC power feed and a dedicated 15 A (250 VAC) circuit breaker.



WARNING: To meet safety and electromagnetic interference (EMI) requirements and to ensure proper operation, the services gateway chassis must be adequately grounded before power is connected. See "Grounding the SRX5800 Services Gateway" on page 96 for instructions.

Copyright © 2014, Juniper Networks, Inc.

Figure 16: Standard-Capacity AC Power Supply

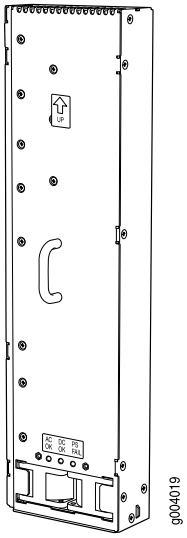

Related Documentation

- Calculating Power Requirements for the SRX5800 Services Gateway on page 275
- SRX5800 Services Gateway Craft Interface Power Supply LEDs on page 23
- SRX5800 Services Gateway Power System Overview on page 28
- SRX5800 Services Gateway Standard-Capacity AC Power Supply LEDs on page 35
- Troubleshooting the SRX5800 Services Gateway Power System on page 142
- Replacing an SRX5800 Services Gateway AC Power Supply on page 211
- SRX5800 Services Gateway AC Power Supply Specifications on page 282

SRX5800 Services Gateway Standard-Capacity AC Power Supply LEDs

Each standard-capacity AC power supply faceplate contains three LEDs that indicate the status of the power supply (see Table 17 on page 36). The power supply status is also reflected in two LEDs on the craft interface. In addition, a power supply failure triggers the red alarm LED on the craft interface.

Copyright © 2014, Juniper Networks, Inc.

Table 17: Standard Capacity AC Power Supply LEDs

Label	Color	State	Description
AC OK	Green	Off	AC power applied to power supply is not within the normal operating range.
		On	AC power applied to power supply is within the normal operating range.
DC OK	Green	Off	DC power outputs generated by the power supply are not within the normal operating ranges.
		On	DC power outputs generated by the power supply are within the normal operating ranges.
PS FAIL	Red	Off	Power supply is functioning normally.
		On	Power supply is not functioning normally. Check **AC OK** and **DC OK** LEDs for more information.

Related Documentation

- SRX5800 Services Gateway Craft Interface Power Supply LEDs on page 23
- SRX5800 Services Gateway Power System Overview on page 28
- SRX5800 Services Gateway Standard-Capacity AC Power Supply on page 34
- SRX5800 Services Gateway Standard-Capacity DC Power Supply on page 39

SRX5800 Services Gateway High-Capacity DC Power Supply

High-capacity DC power supplies provide a maximum of 4100 W of power each. Two high-capacity DC power supplies are required, and you can install four high-capacity DC power supplies for redundancy. Each high-capacity DC power supply has inlets for two DC power feeds. The four power connectors (-48V and RTN for each of the two inlets) are located behind a clear plastic cover near the bottom of the power supply. Each DC power inlet you use requires a dedicated DC power feed and a dedicated 80 A circuit breaker.

NOTE: The services gateway cannot be powered from standard-capacity and high-capacity DC power supplies simultaneously. The one exception is during the process of replacing standard-capacity DC power supplies with high-capacity DC power supplies, when it is permissible to have both types installed briefly.

NOTE: The high-capacity power supply will operate with only one of its two DC inlets connected to a DC power feed. However, its DC output will be limited to a maximum of 1700 W. We recommend that you connect two DC power feeds to each high-capacity DC power supply.

Copyright © 2014, Juniper Networks, Inc.

NOTE: The services gateway must be running Junos OS Release 12.1X44-D10 or later in order to use high-capacity DC power supplies.

Each high-capacity DC power supply has an input mode switch, covered by a small metal plate. The input mode switch tells the system the number of DC power feeds it should expect. The input mode switch settings are described in Table 18 on page 37. The default setting is 1.

Table 18: High-Capacity DC Power Supply Input Mode Switch Settings

Mode Switch Setting	AC Inputs	Result
1	Both DC inlets powered	DC output of 4100 W **DC OK** LED lights
	Only one DC inlet powered	DC output of 1700 W **DC OK** LED lights
0	Both DC inlets powered	DC output of 4100 W **DC OK** LED lights
	Only one DC inlet powered	DC output disabled **DC OK** LED unlit

NOTE: We recommend that you set the input mode switch to 1 and connect two DC input feeds to each high-capacity DC power supply.

WARNING: To meet safety and electromagnetic interference (EMI) requirements and to ensure proper operation, the services gateway chassis must be adequately grounded before power is connected. See "Grounding the SRX5800 Services Gateway" on page 96 for instructions.

Copyright © 2014, Juniper Networks, Inc.

Figure 17: High-Capacity DC Power Supply

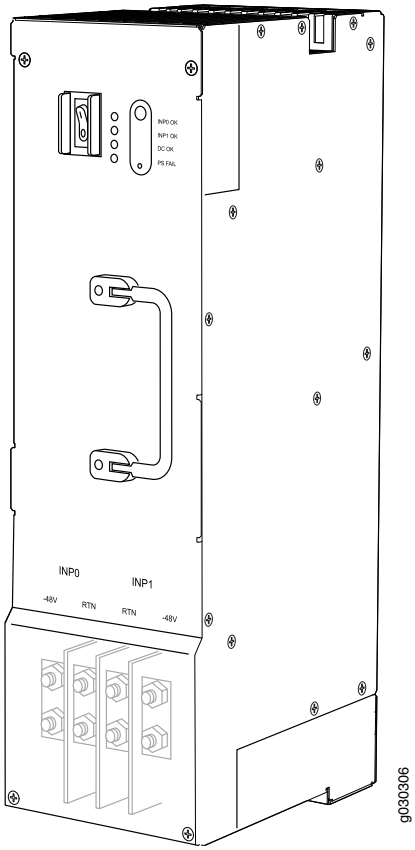

Related Documentation

- Calculating Power Requirements for the SRX5800 Services Gateway on page 275
- SRX5800 Services Gateway Power System Overview on page 28
- Installing an SRX5800 Services Gateway DC Power Supply on page 219
- SRX5800 Services Gateway Power System Overview on page 28
- SRX5800 Services Gateway Standard-Capacity DC Power Supply LEDs on page 40
- Maintaining SRX5800 Services Gateway Power Supplies on page 133
- Troubleshooting the SRX5800 Services Gateway Power System on page 142
- Replacing an SRX5800 Services Gateway DC Power Supply on page 216
- SRX5800 Services Gateway DC Power Supply Specifications on page 286

SRX5800 Services Gateway High-Capacity DC Power Supply LEDs

Each high-capacity DC power supply faceplate contains four LEDs that indicate the status of the power supply (see Table 19 on page 39). The power supply status is also reflected in two LEDs on the craft interface. In addition, a power supply failure triggers the red alarm LED on the craft interface.

Copyright © 2014, Juniper Networks, Inc.

Table 19: High-Capacity DC Power Supply LEDs

Label	Color	State	Description
INP0 OK	Green	Off	DC power applied to the power supply at input INP0 is not within the normal operating range.
		On	DC power applied to the power supply at input INP0 is within the normal operating range.
INP1 OK	Green	Off	DC power applied to the power supply at input INP1 is not within the normal operating range.
		On	DC power applied to the power supply at input INP1 is within the normal operating range.
DC OK	Green	Off	DC power outputs generated by the power supply are not within the normal operating ranges.
		On	DC power outputs generated by the power supply are within the normal operating ranges.
PS FAIL	Red	Off	Power supply is functioning normally.
		On	Power supply is not functioning normally. Check the **INP0 OK**, **INP1 OK**, and **DC OK** LEDs for more information.

Related Documentation

- SRX5800 Services Gateway Craft Interface Power Supply LEDs on page 23
- SRX5800 Services Gateway Power System Overview on page 28
- SRX5800 Services Gateway Standard-Capacity DC Power Supply on page 39

SRX5800 Services Gateway Standard-Capacity DC Power Supply

In the DC power configuration, the services gateway contains either two or four DC power supplies (see Figure 18 on page 40), located at the lower rear of the chassis in slots **PEM0** through **PEM3** (left to right). You can upgrade your DC power system from two to four power supplies.

Four power supplies provide full redundancy. If a DC power supply fails, its redundant power supply takes over without interruption.

Each DC power supply has a single DC input (–48 VDC and return) that requires a dedicated 80 A (–48 VDC) circuit breaker for the maximum hardware configuration.

Copyright © 2014, Juniper Networks, Inc.

Figure 18: Standard-Capacity DC Power Supply

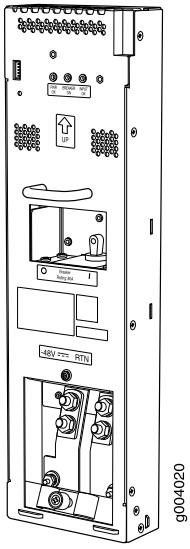

Related Documentation

- Calculating Power Requirements for the SRX5800 Services Gateway on page 275
- SRX5800 Services Gateway Power System Overview on page 28
- SRX5800 Services Gateway Standard-Capacity DC Power Supply LEDs on page 40
- Maintaining SRX5800 Services Gateway Power Supplies on page 133
- Troubleshooting the SRX5800 Services Gateway Power System on page 142
- Replacing an SRX5800 Services Gateway DC Power Supply on page 216
- SRX5800 Services Gateway DC Power Supply Specifications on page 286

SRX5800 Services Gateway Standard-Capacity DC Power Supply LEDs

Each standard-capacity DC power supply faceplate contains three LEDs that indicate the status of the power supply (see Table 20 on page 41). The power supply status is also reflected in two LEDs on the craft interface. In addition, a power supply failure triggers the red alarm LED on the craft interface.

Copyright © 2014, Juniper Networks, Inc.

Table 20: DC Power Supply LEDs

Label	Color	State	Description
PWR OK	Green	Off	Power supply is not functioning normally. Check the **INPUT OK** LED for more information.
		On	Power supply is functioning normally.
BREAKER ON	Green	Off	DC power supply circuit breaker is turned off.
		On	DC power supply circuit breaker is turned on.
INPUT OK	Green	Off	DC input to the PEM is not present.
		On	DC input is present, and is connected in correct polarity.
	Amber	On	DC input is present, but connected in reverse polarity.

Related Documentation

- SRX5800 Services Gateway Craft Interface Power Supply LEDs on page 23
- SRX5800 Services Gateway Power System Overview on page 28
- SRX5800 Services Gateway Standard-Capacity DC Power Supply on page 39

SRX5800 Services Gateway Cooling System Description

The cooling system consists of the following components:

- Upper fan tray
- Lower fan tray
- Air filter tray and air filter

The cooling system components work together to keep all services gateway components within the acceptable temperature range (see Figure 19 on page 42, Figure 20 on page 42, Figure 22 on page 43, and Figure 23 on page 43). The services gateway has two fan trays located in the front of the device that install horizontally above and below the card cage. The fan trays are interchangeable and are hot-insertable and hot-removable.

Copyright © 2014, Juniper Networks, Inc.

Figure 19: Airflow Through the Chassis

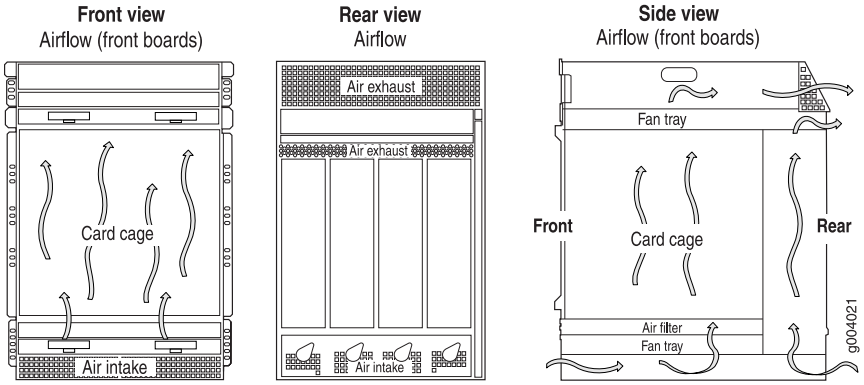

The host subsystem monitors the temperature of the device components. When the device is operating normally, the fans function at lower than full speed. If a fan fails or the ambient temperature rises above a threshold, the speed of the remaining fans is automatically adjusted to keep the temperature within the acceptable range. If the ambient maximum temperature specification is exceeded and the system cannot be adequately cooled, the Routing Engine shuts down the system by disabling output power from each PEM.

There is a single air intake in the front of the services gateway. Air is pushed up through an air filter, through the card cage, and then through the upper fan tray where it combines in a common exhaust plenum and is exhausted out the upper rear of the system.

Two different types of fan tray are available:

- The standard capacity fan tray has six fans and is adequate for services gateways in which standard-capacity power supplies are installed.
- The high-capacity fan tray has 12 fans and is required when high-capacity power supplies are installed. When high-capacity fan trays are installed, you must also install the high-capacity air filter tray.

Figure 20: Standard-Capacity Fan Tray (Same Upper and Lower)

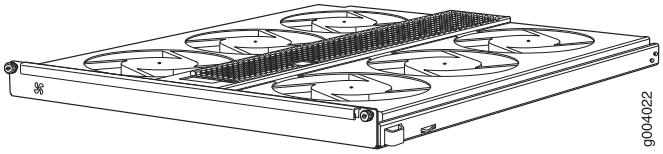

Figure 21: High-Capacity Fan Tray (Same Upper and Lower)

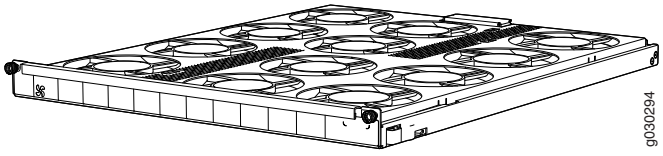

Copyright © 2014, Juniper Networks, Inc.

Figure 22: Air Filter

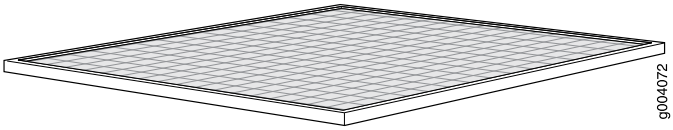

Figure 23: Standard-Capacity Air Filter Tray

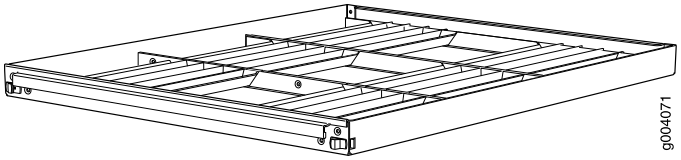

Figure 24: High-Capacity Air Filter Tray

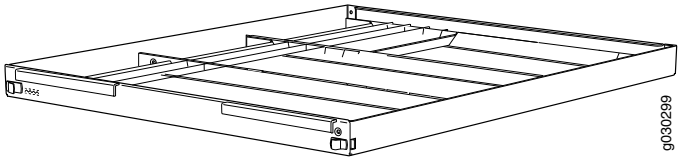

Related Documentation

- Maintaining the Fan Trays on the SRX5800 Services Gateway on page 123
- Maintaining the Air Filter on the SRX5800 Services Gateway on page 122
- Troubleshooting the SRX5800 Services Gateway Cooling System on page 138
- Replacing an SRX5800 Services Gateway Fan Tray on page 150
- Replacing the SRX5800 Services Gateway Air Filter on page 155

SRX5800 Services Gateway Cable Manager Description

The cable management system (see Figure 25 on page 44) is a tray located below the card cage that has a row of fourteen dividers for securing the cables for each card. Features in the cable management tray allow you to gently secure the cables with cable strips or other ties. To secure the cables in place, loop the tie through the cable anchor and secure the tie.

You can pull the cable management system up and outward to lock it into the maintenance position. This allows you to access the lower fan tray and the air filter.

Copyright © 2014, Juniper Networks, Inc.

Figure 25: Cable Management System

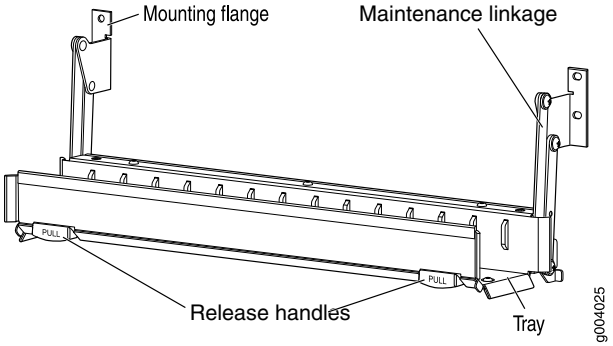

Related Documentation

- Replacing the SRX5800 Services Gateway Cable Manager on page 229

Copyright © 2014, Juniper Networks, Inc.

PART 2

Setting Up the SRX5800 Services Gateway

- SRX5800 Services Gateway Installation on page 47
- Preparing the Site for the SRX5800 Services Gateway Installation on page 49
- Unpacking the SRX5800 Services Gateway on page 57
- Installing the SRX5800 Services Gateway Mounting Hardware on page 63
- Installing the SRX5800 Services Gateway on page 69
- Connecting the SRX5800 Services Gateway on page 87
- Grounding and Providing Power to the SRX5800 Services Gateway on page 95
- Configuring Junos OS for the SRX5800 Services Gateway on page 109

Copyright © 2014, Juniper Networks, Inc.

Copyright © 2014, Juniper Networks, Inc.

CHAPTER 3

SRX5800 Services Gateway Installation

- Overview of Installing the SRX5800 Services Gateway on page 47

Overview of Installing the SRX5800 Services Gateway

To install the SRX5800 Services Gateway:

1. Prepare your installation site as described in "Site Preparation Checklist for the SRX5800 Services Gateway" on page 49.
2. Review the safety guidelines explained in "SRX5800 Services Gateway General Safety Guidelines and Warnings" on page 237.
3. Unpack the services gateway and verify the parts.
   a. Unpacking the SRX5800 Services Gateway on page 57
   b. Verifying the SRX5800 Services Gateway Parts Received on page 59
4. Install the mounting hardware.
   - Installing the SRX5800 Services Gateway Mounting Hardware for a Four-Post Rack or Cabinet on page 63
   - Installing the SRX5800 Services Gateway Mounting Hardware in an Open-Frame Rack on page 65
5. Remove components from the services gateway chassis as described in "Removing Components from the SRX5800 Chassis Before Installing It in the Rack" on page 69.
6. Lift the services gateway on to the rack as described in "Installing the SRX5800 Services Gateway Chassis in the Rack" on page 76.
7. Reinstall components into the services gateway chassis as described in "Reinstalling Components in the SRX5800 Services Gateway Chassis After Installing It in the Rack" on page 79.
8. Connect cables to the network and external devices.
   - Connecting the SRX5800 Services Gateway to a Management Console or an Auxiliary Device on page 89
   - Connecting the SRX5800 Services Gateway to a Network for Out-of-Band Management on page 88

Copyright © 2014, Juniper Networks, Inc.

- Connecting the Alarm Relay Wires to the SRX5800 Services Gateway Craft Interface on page 150

9. Connect the grounding cable as described in "Grounding the SRX5800 Services Gateway" on page 96.



WARNING: To meet safety and electromagnetic interference (EMI) requirements and to ensure proper operation, you must properly ground the services gateway chassis before connecting power.

10. Connect the AC power cord or DC power cables:
    - Connecting Power to an AC-Powered SRX5800 Services Gateway on page 97
    - Connecting Power to a DC-Powered SRX5800 Services Gateway on page 102
11. Power on the services gateway:
    - Powering On an AC-Powered SRX5800 Services Gateway on page 101
    - Powering On a DC-Powered SRX5800 Services Gateway on page 105
12. Perform the initial system configuration as described in "Initially Configuring the SRX5800 Services Gateway" on page 110.

Related Documentation

- SRX5800 Services Gateway Chassis on page 7
- Routine Maintenance Procedures for the SRX5800 Services Gateway on page 121

Copyright © 2014, Juniper Networks, Inc.

CHAPTER 4

Preparing the Site for the SRX5800 Services Gateway Installation

- Site Preparation Checklist for the SRX5800 Services Gateway on page 49
- SRX5800 Services Gateway Rack Requirements on page 50
- SRX5800 Services Gateway Cabinet Requirements on page 53

Site Preparation Checklist for the SRX5800 Services Gateway

The checklist in Table 21 on page 49 summarizes the tasks you need to perform when preparing a site for services gateway installation.

Table 21: Site Preparation Checklist

Item or Task	For More Information ...	Performed By	Date
Verify that environmental factors such as temperature and humidity do not exceed services gateway tolerances.	"SRX5800 Services Gateway Environmental Specifications" on page 273		
Plan rack or cabinet location, including required space clearances.	"Clearance Requirements for SRX5800 Services Gateway Airflow and Hardware Maintenance" on page 52		
Select the type of rack or cabinet.	"SRX5800 Services Gateway Cabinet Size and Clearance Requirements" on page 54, "SRX5800 Services Gateway Rack Size and Strength Requirements" on page 51		
If a rack is used, secure rack to floor and building structure.	"Connection to Building Structure for the SRX5800 Services Gateway Rack" on page 52		
Acquire cables and connectors.			
Locate sites for connection of system grounding.	"DC Power Electrical Safety Guidelines and Warnings" on page 264		
Measure distance between external power sources and services gateway installation site.			

Copyright © 2014, Juniper Networks, Inc.

Table 21: Site Preparation Checklist *(continued)*

Item or Task	For More Information ...	Performed By	Date
Calculate the optical power budget and optical power margin.	"Calculating Power Budget for Fiber-Optic Cable for the SRX5800 Services Gateway" on page 295,"Calculating Power Margin for Fiber-Optic Cable for the SRX5800 Services Gateway" on page 295		

Related Documentation

- Overview of Installing the SRX5800 Services Gateway on page 47
- Unpacking the SRX5800 Services Gateway on page 57

SRX5800 Services Gateway Rack Requirements

The services gateway can be installed in a rack. Many types of racks are acceptable, including four-post (telco) racks and open-frame racks. An example of an open-frame rack is shown in Figure 26 on page 50.

Figure 26: Typical Open-Frame Rack

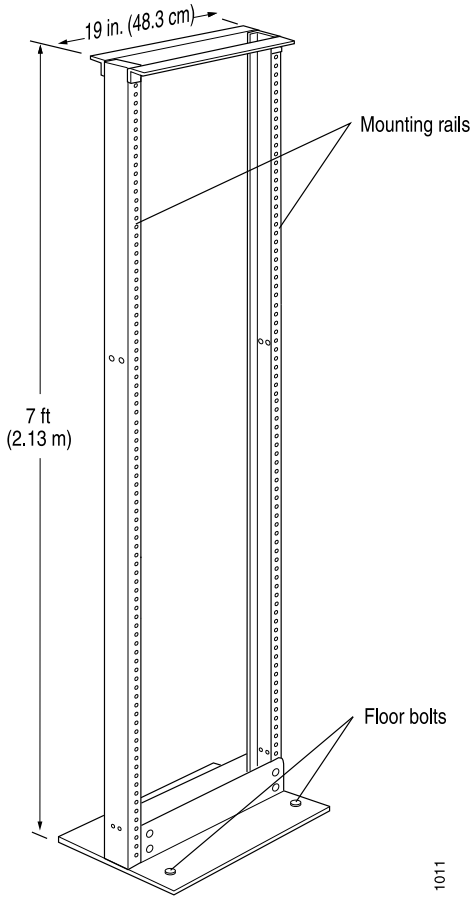

Copyright © 2014, Juniper Networks, Inc.

The rack requirements are described in the following topics:

- SRX5800 Services Gateway Rack Size and Strength Requirements on page 51
- Spacing of Rack-Mounting Bracket Holes for the SRX5800 Services Gateway on page 52
- Connection to Building Structure for the SRX5800 Services Gateway Rack on page 52
- Clearance Requirements for SRX5800 Services Gateway Airflow and Hardware Maintenance on page 52

SRX5800 Services Gateway Rack Size and Strength Requirements

The size, strength, and location of the rack must accommodate the services gateway's weight and external dimensions. The location of the rack must allow for the clearance requirements specified in "Clearance Requirements for SRX5800 Services Gateway Airflow and Hardware Maintenance" on page 52.

The chassis is 17.37 in. (44.11 cm) wide. The services gateway is designed for installation in a standard 19-in. rack, as defined in *Cabinets, Racks, Panels, and Associated Equipment* (document number EIA-310-D) published by the Electronics Industry Association (http://www.eia.org). The spacing of the holes between the left and right front-mounting flanges and center-mounting brackets is 18.31 in (465 mm) apart. However, the inner edge of the rack rails must allow sufficient space for the width of the chassis.

With the use of adapters or approved wing devices to narrow the opening between the rails, the services gateway can fit into a 600-mm-wide rack, as defined in the four-part *Equipment Engineering (EE); European telecommunications standard for equipment practice* (document numbers ETS 300 119-1 through 119-4) published by the European Telecommunications Standards Institute (http://www.etsi.org).

Observe these guidelines:

- The rack must have sufficient vertical usable space to accomodate the height of the services gateway: 27.75 in. (70.49 cm) high (approximately 16 U). You can stack three services gateways in a rack that is at least 48 U (89.3 in. or 2.24 m) in height.

  NOTE: A *U* is the standard rack unit defined in *Cabinets, Racks, Panels, and Associated Equipment*.

- The location of the rack must provide sufficient space to accommodate the depth of the services gateway. The chassis depth from the front mounting flange to the rear of the power supply ranges from 23.0 in. (58.4 cm) to 27.8 in. (70.6 cm) depending on the type of power supply installed.
- The rack must be strong enough to support the weight of the fully configured services gateway, up to 400 lb (182 kg). If you stack three fully configured services gateways, it must be capable of supporting up to 1,200 lb (545 kg).

Related Documentation

- SRX5800 Services Gateway Physical Specifications on page 3
- Clearance Requirements for SRX5800 Services Gateway Airflow and Hardware Maintenance on page 52

Copyright © 2014, Juniper Networks, Inc.

- Overview of Installing the SRX5800 Services Gateway on page 47
- Site Preparation Checklist for the SRX5800 Services Gateway on page 49
- Spacing of Rack-Mounting Bracket Holes for the SRX5800 Services Gateway on page 52
- Connection to Building Structure for the SRX5800 Services Gateway Rack on page 52

Spacing of Rack-Mounting Bracket Holes for the SRX5800 Services Gateway

The services gateway can be mounted in any rack that provides holes or hole patterns spaced at 1 U (1.75 in.) increments. The mounting brackets used to attach the chassis to a rack are designed to fasten to holes spaced at those distances.

Related Documentation

- Overview of Installing the SRX5800 Services Gateway on page 47
- SRX5800 Services Gateway Rack Size and Strength Requirements on page 51
- Connection to Building Structure for the SRX5800 Services Gateway Rack on page 52
- Clearance Requirements for SRX5800 Services Gateway Airflow and Hardware Maintenance on page 52

Connection to Building Structure for the SRX5800 Services Gateway Rack

Always secure the rack to the structure of the building. If your geographical area is subject to earthquakes, bolt the rack to the floor. For maximum stability, also secure the rack to ceiling brackets.

Related Documentation

- Overview of Installing the SRX5800 Services Gateway on page 47
- SRX5800 Services Gateway Rack Size and Strength Requirements on page 51
- Spacing of Rack-Mounting Bracket Holes for the SRX5800 Services Gateway on page 52
- Clearance Requirements for SRX5800 Services Gateway Airflow and Hardware Maintenance on page 52

Clearance Requirements for SRX5800 Services Gateway Airflow and Hardware Maintenance

When planning the installation site, you need to allow sufficient clearance around the rack (see Figure 27 on page 53):

- For the cooling system to function properly, the airflow around the chassis must be unrestricted.
- For service personnel to remove and install hardware components, there must be adequate space at the front and back of the services gateway. At least 24 in. (61 cm) is required both in front of and behind the services gateway. NEBS GR-63 recommends that you allow at least 30 in. (76.2 cm) behind the services gateway.

Copyright © 2014, Juniper Networks, Inc.

- Airflow must always be from front to back with respect to the rack. If the device has side to rear airflow, then provisions must be made to ensure that fresh air from the front of the rack is supplied to the inlets, and exhaust exits the rear of the rack. The device must not interfere with the cooling of other systems in the rack. Fillers must be used as appropriate in the rack to ensure there is no recirculation of heated exhaust air back to the front of the rack. Care must also be taken around cables to ensure that there is no leakage of air in situations where recirculation might result.

Figure 27: Chassis Dimensions and Clearance Requirements for the Services Gateway

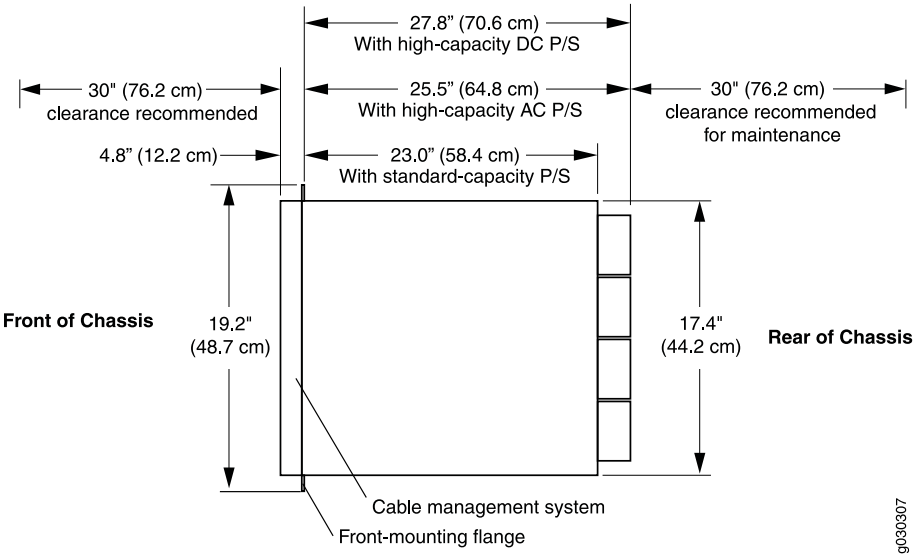

Related Documentation

- Overview of Installing the SRX5800 Services Gateway on page 47
- SRX5800 Services Gateway Rack Size and Strength Requirements on page 51
- Spacing of Rack-Mounting Bracket Holes for the SRX5800 Services Gateway on page 52
- Connection to Building Structure for the SRX5800 Services Gateway Rack on page 52

SRX5800 Services Gateway Cabinet Requirements

The services gateway can be installed in an enclosed cabinet. The cabinet requirements are described in the following topics:

- SRX5800 Services Gateway Cabinet Size and Clearance Requirements on page 54
- SRX5800 Services Gateway Cabinet Airflow Requirements on page 54

Copyright © 2014, Juniper Networks, Inc.

SRX5800 Services Gateway Cabinet Size and Clearance Requirements

The minimum size cabinet that can accommodate the device depends on the type of power supplies installed:

- If only standard-capacity power supplies are installed, the services gateway will fit inside a standard 600 mm wide by 800 mm deep cabinet.
- If high-capacity AC or DC power supplies are installed, the services gateway must be installed in a cabinet that is at least 600 mm wide by 1000 mm deep.

See "Clearance Requirements for SRX5800 Services Gateway Airflow and Hardware Maintenance" on page 52 for chassis width and depth dimensions. A cabinet larger than the minimum requirement provides better airflow and reduces the chance of overheating. To accommodate a single device, the cabinet must be at least 16 U high. If you provide adequate cooling air and airflow clearance, you can stack three devices in a cabinet that has at least 48 U (84 in. or 2.13 m) of usable vertical space.

Related Documentation

- Overview of Installing the SRX5800 Services Gateway on page 47
- Clearance Requirements for SRX5800 Services Gateway Airflow and Hardware Maintenance on page 52
- Site Preparation Checklist for the SRX5800 Services Gateway on page 49
- Spacing of Rack-Mounting Bracket Holes for the SRX5800 Services Gateway on page 52
- SRX5800 Services Gateway Cabinet Airflow Requirements on page 54

SRX5800 Services Gateway Cabinet Airflow Requirements

When you mount the services gateway in a cabinet, you must ensure that ventilation through the cabinet is sufficient to prevent overheating. Following is a list of requirements to consider when planning for chassis cooling:

- Ensure that the cool air supply you provide through the cabinet can adequately dissipate the thermal output of the device.
- Ensure that the cabinet allows the chassis hot exhaust air to exit from the cabinet without recirculating into the device. An open cabinet (without a top or doors) that employs hot air exhaust extraction from the top allows the best airflow through the chassis. If the cabinet contains a top or doors, perforations in these elements assist with removing the hot air exhaust.
- Install the device as close as possible to the front of the cabinet so that the cable management system just clears the inside of the front door. This maximizes the clearance in the rear of the cabinet for critical airflow.
- Route and dress all cables to minimize the blockage of airflow to and from the chassis.

Related Documentation

- SRX5800 Services Gateway Cooling System Description on page 41
- Overview of Installing the SRX5800 Services Gateway on page 47

Copyright © 2014, Juniper Networks, Inc.

- Clearance Requirements for SRX5800 Services Gateway Airflow and Hardware Maintenance on page 52
- Site Preparation Checklist for the SRX5800 Services Gateway on page 49
- Spacing of Rack-Mounting Bracket Holes for the SRX5800 Services Gateway on page 52
- SRX5800 Services Gateway Cabinet Size and Clearance Requirements on page 54

Copyright © 2014, Juniper Networks, Inc.

Copyright © 2014, Juniper Networks, Inc.

CHAPTER 5

Unpacking the SRX5800 Services Gateway

- Tools and Parts Required to Unpack the SRX5800 Services Gateway on page 57
- Unpacking the SRX5800 Services Gateway on page 57
- Verifying the SRX5800 Services Gateway Parts Received on page 59

Tools and Parts Required to Unpack the SRX5800 Services Gateway

To unpack the services gateway and prepare for installation, you need the following tools:

- Phillips (+) screwdriver, number 2
- 1/2-in. or 13-mm open-end or socket wrench to remove bracket bolts from the shipping pallet
- Blank panels to cover any slots not occupied by a component

Related Documentation

- Overview of Installing the SRX5800 Services Gateway on page 47
- Site Preparation Checklist for the SRX5800 Services Gateway on page 49
- Unpacking the SRX5800 Services Gateway on page 57
- Verifying the SRX5800 Services Gateway Parts Received on page 59

Unpacking the SRX5800 Services Gateway

The services gateway is shipped in a wooden crate. A wooden pallet forms the base of the crate. The services gateway chassis is bolted to this pallet. A cardboard accessory box and a *Getting Started Guide* are also included in the shipping crate.

The shipping container measures 33 in. (83.8 cm) high, 30.25 in. (76.8 cm) wide, and 43.25 in. (109.9 cm) deep. The total weight of the container containing the services gateway and accessories can range from 270 lb (122.5 kg) to 475 lb (215.5 kg).

Copyright © 2014, Juniper Networks, Inc.

NOTE: The services gateway is maximally protected inside the shipping crate. Do not unpack it until you are ready to begin installation.

To unpack the services gateway, follow these steps (see Figure 28 on page 58):

1. Move the shipping crate to a staging area as close to the installation site as possible, where you have enough room to remove the components from the chassis. While the chassis is bolted to the pallet, you can use a forklift or pallet jack to move it.
2. Position the shipping crate with the arrows pointing up.
3. Open all the latches on the shipping crate.
4. Remove the front door of the shipping crate cover and set it aside.
5. Slide the remainder of the shipping crate cover off the pallet.
6. Remove the foam covering the top of the services gateway.
7. Remove the accessory box and the *SRX5800 Services Gateway Getting Started Guide*.
8. Verify the parts received as described in "Verifying the SRX5800 Services Gateway Parts Received" on page 59.
9. Remove the vapor corrosion inhibitor (VCI) packs attached to the pallet, being careful not to break the VCI packs open.
10. To remove the brackets holding the chassis on the pallet, use a 1/2-in. socket wrench and a number 2 Phillips screwdriver to remove the bolts and screws from the brackets.
11. Store the brackets and bolts inside the accessory box.
12. Save the shipping crate cover, pallet, and packing materials in case you need to move or ship the services gateway at a later time.

Figure 28: Contents of the Shipping Crate

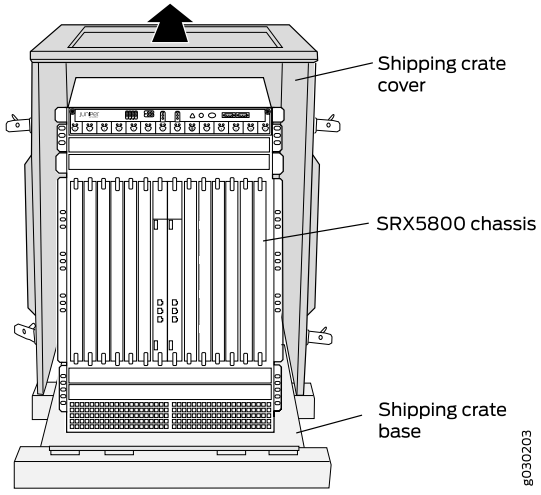

Copyright © 2014, Juniper Networks, Inc.

Related Documentation

- Overview of Installing the SRX5800 Services Gateway on page 47
- Installing the SRX5800 Services Gateway Chassis in the Rack on page 76
- Site Preparation Checklist for the SRX5800 Services Gateway on page 49
- Tools and Parts Required to Unpack the SRX5800 Services Gateway on page 57
- Verifying the SRX5800 Services Gateway Parts Received on page 59

Verifying the SRX5800 Services Gateway Parts Received

A packing list is included in each shipment. Check the parts in the shipment against the items on the packing list. The packing list specifies the part numbers and descriptions of each part in your order.

If any part is missing, contact a customer service representative.

A fully configured services gateway contains the services gateway chassis with installed components, listed in Table 22 on page 59, and an accessory box, which contains the parts listed in Table 23 on page 60. The parts shipped with your services gateway can vary depending on the configuration you ordered.

Table 22: Parts List for a Fully Configured Services Gateway

Component	Quantity
Chassis, including midplane, craft interface, and rack-mounting brackets	1
IOCs, Flex IOCs, and MPCs	Up to 11
SPCs	Up to 11
Routing Engines	1 or 2
SCBs	Up to 3
Power supplies	Up to 4
Fan trays	2
Air filter	1
Air filter tray	1
Getting Started Guide	1
Large mounting shelf	1
Small mounting shelf	1

Copyright © 2014, Juniper Networks, Inc.

Table 22: Parts List for a Fully Configured Services Gateway *(continued)*

Component	Quantity
Blank panels for slots without components installed	One blank panel for each slot not occupied by a component

Table 23: Accessory Box Parts List

Part	Quantity
Screws to mount chassis	14
Screws to connect grounding cable (1/4-20 thread, 1/2 in. length)	2
Split washers for connecting grounding cable	2
DC power terminal Lugs, 6-AWG	8
RJ-45 cable, with RJ-45 Jack to Female DB-9, to connect the device through the serial port	1
Terminal block plug, 3 pole, 5.08 mm spacing, 12A, to connect the device alarms	2
Label, accessories contents, SRX5800	1
USB flash drive with Junos OS	1
Read me first document	1
Affidavit for T1 connection	1
Juniper Networks Product Warranty	1
End User License Agreement	1
Document sleeve	1
3" x 5" pink bag	2
9" x 12" pink bag, ESD	2
Accessory Box, 19 x 12 x 3"	1
Ethernet cable, RJ-45/RJ-45, 4-pair stranded UTP, Category 5E, 15'	1
ESD wrist strap with cable	1

Related Documentation

- Overview of Installing the SRX5800 Services Gateway on page 47
- Site Preparation Checklist for the SRX5800 Services Gateway on page 49

Copyright © 2014, Juniper Networks, Inc.

- Tools and Parts Required to Unpack the SRX5800 Services Gateway on page 57
- Unpacking the SRX5800 Services Gateway on page 57

Copyright © 2014, Juniper Networks, Inc.

Copyright © 2014, Juniper Networks, Inc.

CHAPTER 6

Installing the SRX5800 Services Gateway Mounting Hardware

- Installing the SRX5800 Services Gateway Mounting Hardware for a Four-Post Rack or Cabinet on page 63
- Installing the SRX5800 Services Gateway Mounting Hardware in an Open-Frame Rack on page 65

Installing the SRX5800 Services Gateway Mounting Hardware for a Four-Post Rack or Cabinet

If you are installing the services gateway in a front-mount four-post rack or cabinet, you must first install the large mounting shelf, followed by the small mounting shelf.

Table 24 on page 63 specifies the holes in which you insert cage nuts and screws to install the mounting hardware required in a four-post or cabinet rack (an *X* indicates a mounting hole location). The hole distances are relative to one of the standard "U" divisions on the rack. The bottom of all mounting shelves is at 0.04 in. (0.02 U) above a "U" division.

Table 24: Four-Post Rack or Cabinet Mounting Hole Locations

Hole	Distance Above "U" Division		Large Shelf	Small Shelf
3	1.51 in. (3.8 cm)	0.86 U		X
2	0.88 in. (2.2 cm)	0.50 U	X	X
1	0.25 in. (0.6 cm)	0.14 U		X

To install the mounting shelves (see Figure 29 on page 64):

1. On the front rack rails, install cage nuts in the holes specified in Table 24 on page 63 for the large shelf.
2. On the front of each front rack rail, partially insert a mounting screw into the hole containing the lowest cage nut.
3. Install the large shelf on the front rack rails. Rest the bottom slot of each ear on a mounting screw.

Copyright © 2014, Juniper Networks, Inc.

4. Partially insert a mounting screw into the top hole in each ear of the large shelf.
5. Tighten all the screws completely.
6. On the rear rack rails, install cage nuts in the holes specified in Table 24 on page 63 for the small shelf.
7. On the back of each rear rack rail, partially insert a mounting screw into the hole containing the lowest cage nut.
8. Install the small shelf on the back rack rails. Rest the bottom slot of each ear on a mounting screw. The small shelf installs on the back of the rear rails, extending toward the center of the rack. The bottom of the small shelf should align with the bottom of the large shelf.
9. Partially insert screws into the open holes in the ears of the small shelf.
10. Tighten all the screws completely.

Figure 29: Installing the Mounting Hardware for a Four-Post Rack or Cabinet

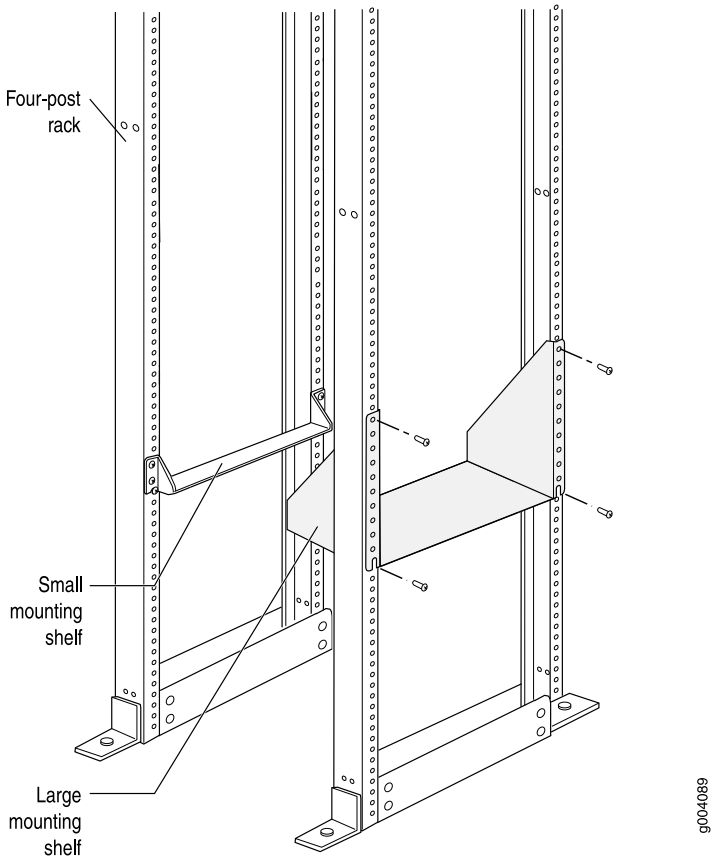

Related Documentation

- Overview of Installing the SRX5800 Services Gateway on page 47
- Site Preparation Checklist for the SRX5800 Services Gateway on page 49

Copyright © 2014, Juniper Networks, Inc.

- Installing the SRX5800 Services Gateway Mounting Hardware in an Open-Frame Rack on page 65
- Tools Required to Install the SRX5800 Services Gateway on page 69
- Installing the SRX5800 Services Gateway Chassis in the Rack on page 76

Installing the SRX5800 Services Gateway Mounting Hardware in an Open-Frame Rack

Before installing the services gateway in an open-frame rack, install the large mounting shelf on the rack. The small mounting shelf is not needed.

If you are front-mounting the services gateway, also remove the center-mounting brackets located on each side of the chassis.

Table 25 on page 65 specifies the holes in which you insert screws to install the mounting hardware in an open-frame rack (an *X* indicates a mounting hole location). The hole distances are relative to one of the standard "U" divisions on the rack. For reference, the bottom of all mounting shelves is at 0.04 in. (0.02 U) above a "U" division.

Table 25: Open-Frame Rack Mounting Hole Locations

Hole	Distance Above "U" Division		Large Shelf
30	17.26 in. (43.8 cm)	9.86 U	X
27	15.51 in. (39.4 cm)	8.86 U	X
24	13.76 in. (34.9 cm)	7.86 U	X
21	12.01 in. (30.5 cm)	6.86 U	X
18	10.26 in. (26.0 cm)	5.86 U	X
15	8.51 in. (21.6 cm)	4.86 U	X
12	6.76 in. (17.1 cm)	3.86 U	X
9	5.01 in. (12.7 cm)	2.86 U	X
6	3.26 in. (8.3 cm)	1.86 U	X
3	1.51 in. (3.8 cm)	0.86 U	X
2	0.88 in. (2.2 cm)	0.50 U	X
1	0.25 in. (0.6 cm)	0.14 U	

To install the large mounting shelf (see Figure 30 on page 66):

Copyright © 2014, Juniper Networks, Inc.

1. On the rear of each rack rail, partially insert a mounting screw into the highest hole specified in Table 25 on page 65 for the large shelf.
2. Install the large shelf on the rack. Hang the shelf over the mounting screws using the keyhole slots located near the top of the large shelf flanges.
3. Partially insert screws into the open holes in the ears of the large shelf.
4. Tighten all the screws completely.

Figure 30: Installing the Mounting Hardware for an Open-Frame Rack

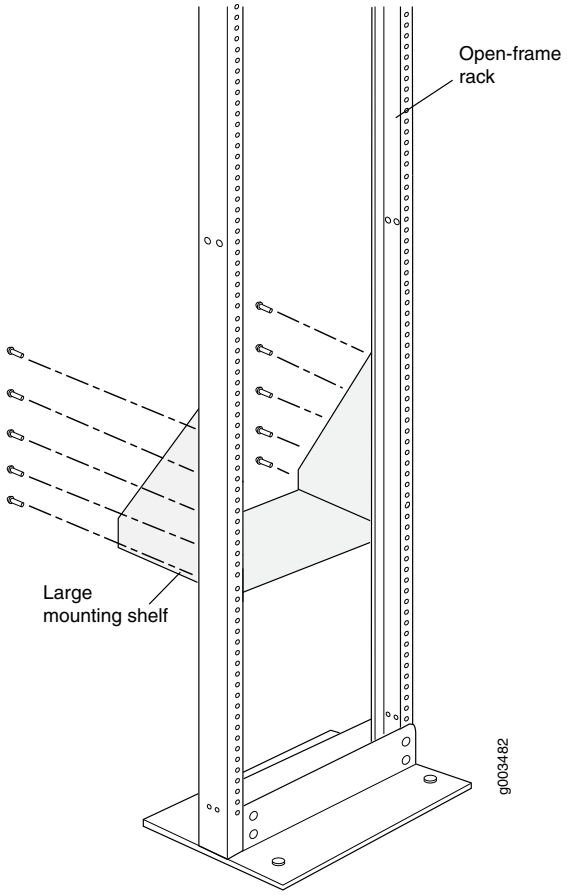

After the mounting hardware is installed, proceed to "Installing the SRX5800 Services Gateway Chassis in the Rack" on page 76.

Related Documentation

- Overview of Installing the SRX5800 Services Gateway on page 47
- Site Preparation Checklist for the SRX5800 Services Gateway on page 49
- Installing the SRX5800 Services Gateway Mounting Hardware for a Four-Post Rack or Cabinet on page 63
- Tools Required to Install the SRX5800 Services Gateway on page 69
- Installing the SRX5800 Services Gateway Chassis in the Rack on page 76

Copyright © 2014, Juniper Networks, Inc.

- Site Preparation Checklist for the SRX5800 Services Gateway on page 49

Copyright © 2014, Juniper Networks, Inc.

Copyright © 2014, Juniper Networks, Inc.

CHAPTER 7

Installing the SRX5800 Services Gateway

- Tools Required to Install the SRX5800 Services Gateway on page 69
- Removing Components from the SRX5800 Chassis Before Installing It in the Rack on page 69
- Installing the SRX5800 Services Gateway Chassis in the Rack on page 76
- Reinstalling Components in the SRX5800 Services Gateway Chassis After Installing It in the Rack on page 79

Tools Required to Install the SRX5800 Services Gateway

To install the services gateway, you need the following tools:

- Mechanical lift
- Phillips (+) screwdrivers, number 2
- Electrostatic discharge (ESD) grounding wrist strap

Related Documentation

- Overview of Installing the SRX5800 Services Gateway on page 47
- Tools and Parts Required for SRX5800 Services Gateway Connections on page 87
- Installing the SRX5800 Services Gateway Chassis in the Rack on page 76

Removing Components from the SRX5800 Chassis Before Installing It in the Rack

Before installing the services gateway in the rack, you must first remove components from the chassis to make it light enough to safely maneuver into the rack. With components removed, the chassis weighs approximately 150 lb (68 kg). You reinstall the components into the chassis after it is installed in the rack.

1. Removing the Power Supplies Before Installing the SRX5800 Services Gateway Chassis on page 70
2. Removing the Cable Manager Before Installing the SRX5800 Services Gateway Chassis on page 71

Copyright © 2014, Juniper Networks, Inc.

3. Removing Fan Trays Before Installing the SRX5800 Services Gateway Chassis on page 72
4. Removing Cards Before Installing the SRX5800 Services Gateway Chassis on page 74

Removing the Power Supplies Before Installing the SRX5800 Services Gateway Chassis

Remove the leftmost power supply first and then work your way to the right. To remove each AC or DC power supply (see Figure 31 on page 71):

1. Attach an ESD grounding strap to your bare wrist, and connect the strap to one of the ESD points on the chassis.
2. Switch off the services gateway power supplies:
   - For an AC-powered services gateway, move the AC input switch on the chassis above each AC power supply to the off (**O**) position. If the services gateway is equipped with high-capacity AC power supplies, you must also move the AC input switch on each power supply to the off (**O**) position.
   - For DC-powered services gateway, move the DC circuit breaker on each power supply faceplate to the off (**O**) position.

   We recommend switching off the power supplies even though they are not connected to power sources.
3. While grasping the handle on the power supply faceplate with one hand, use your other hand to pull the spring-loaded locking pin in the release lever away from the chassis and turn the release lever counterclockwise until it stops.
4. Let go of the locking pin in the release lever. Ensure that the pin is seated inside the corresponding hole in the chassis.
5. Pull the power supply straight out of the chassis.



WARNING: **Do not touch the power connector on the top of the power supply. It can contain dangerous voltages.**

Copyright © 2014, Juniper Networks, Inc.

Figure 31: Removing a Power Supply Before Installing the Services Gateway (Standard-Capacity Power Supply Shown, High-Capacity Similar)

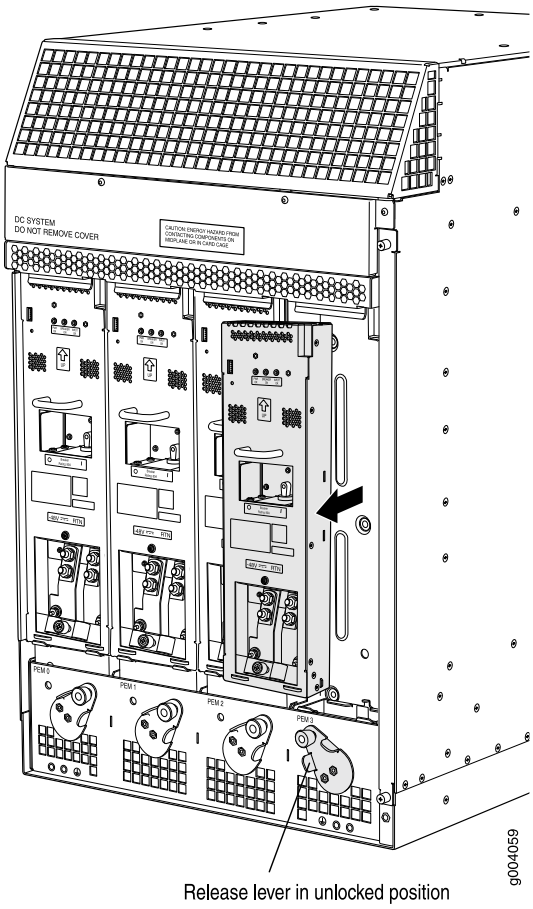

Removing the Cable Manager Before Installing the SRX5800 Services Gateway Chassis

To remove the cable manager (see Figure 32 on page 72):

1. Attach an ESD grounding strap to your bare wrist, and connect the strap to one of the ESD points on the chassis.
2. Using a 7/16-in. nut driver, unscrew the nuts on the corners of the cable manager.
3. Grasp the bottom of the cable manager and pull it straight out from the studs on the front of the chassis.

Copyright © 2014, Juniper Networks, Inc.

Figure 32: Removing the Cable Manager

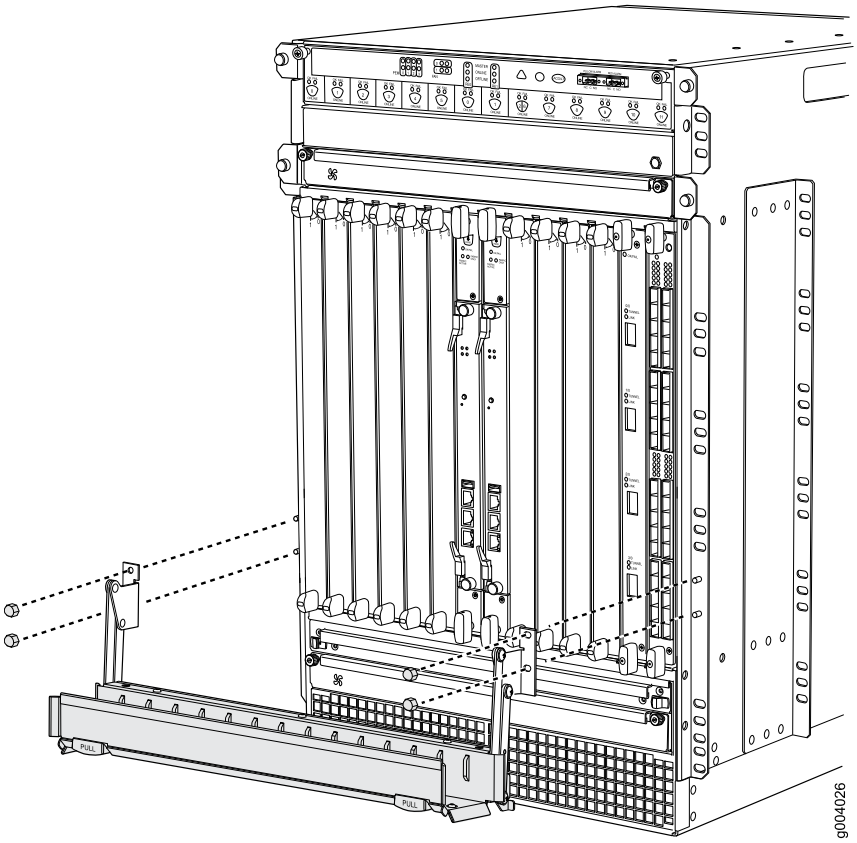

Removing Fan Trays Before Installing the SRX5800 Services Gateway Chassis

To remove the upper or lower fan tray (see Figure 33 on page 73 and Figure 34 on page 74, which illustrate the upper and lower fan trays):

1. Attach an ESD grounding strap to your bare wrist, and connect the strap to one of the ESD points on the chassis.
2. Loosen the captive screw on each side of the fan tray faceplate.
3. Grasp both sides of the fan tray and pull it out approximately 1 to 3 inches.
4. Press on the two latches located on the inside of the fan tray to release the fan tray from the chassis.
5. Place one hand under the fan tray to support it and pull the fan tray completely out of the chassis.

Copyright © 2014, Juniper Networks, Inc.

Figure 33: Removing an Upper Fan Tray

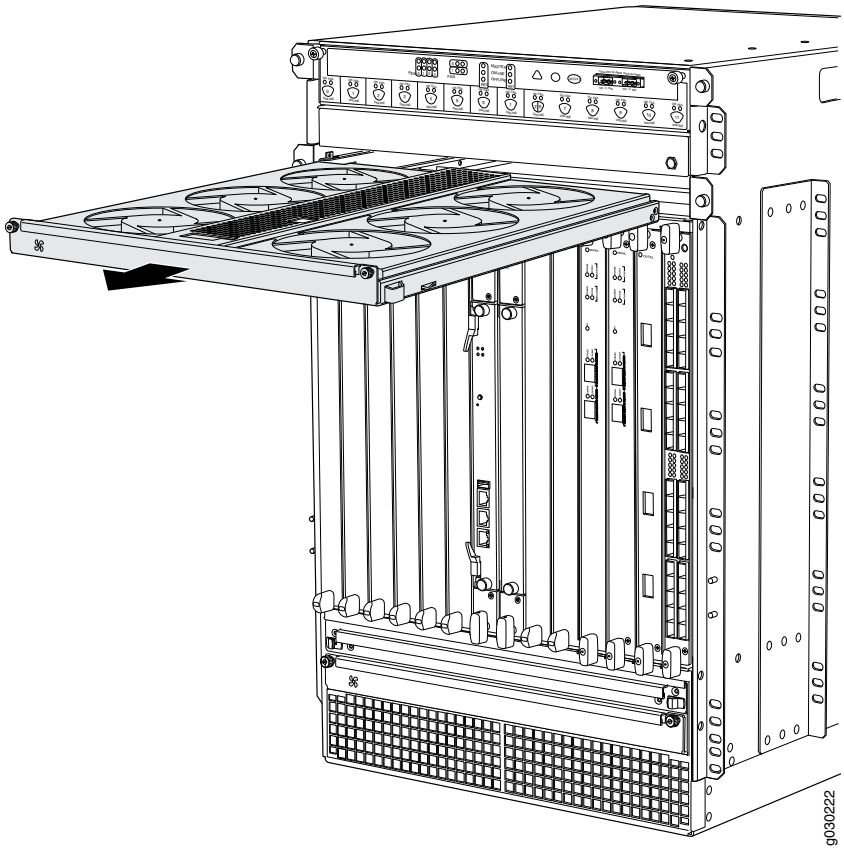

Copyright © 2014, Juniper Networks, Inc.

Figure 34: Removing a Lower Fan Tray

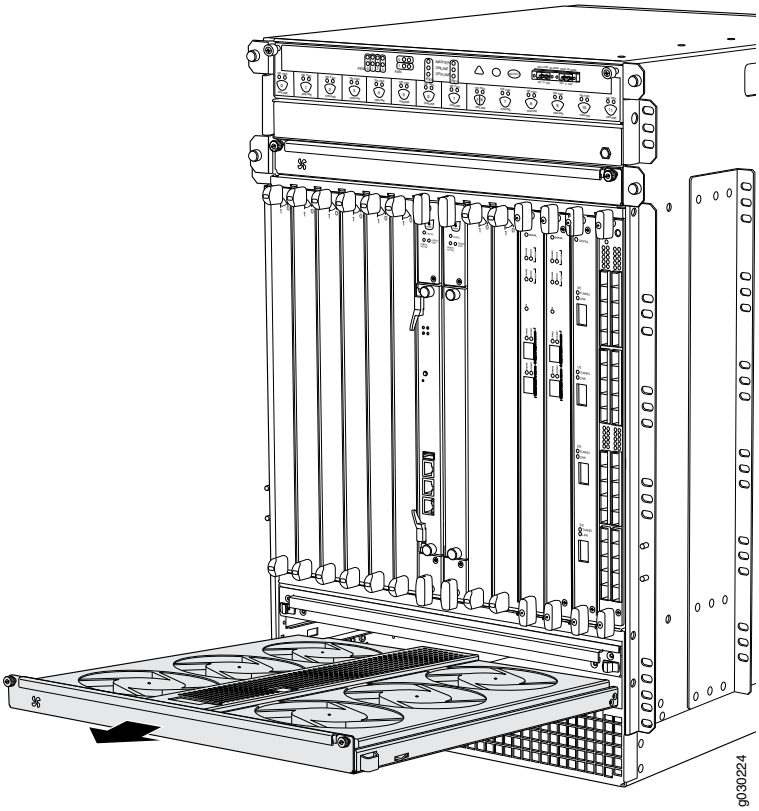

Removing Cards Before Installing the SRX5800 Services Gateway Chassis

The services gateway holds up to twelve cards (IOCs, Flex IOCs, MPCs, SCBs, and SPCs), which are installed horizontally in the front of the device. Each card weighs up to 18.3 lb (8.3 kg), be prepared to accept its full weight.

To remove a card (see Figure 35 on page 76):

1. Have ready an antistatic mat for the card. Also have ready rubber safety caps for each port using an optical interface on the card that you are removing.
2. Attach an ESD grounding strap to your bare wrist, and connect the strap to one of the ESD points on the chassis.
3. Label the cables connected to each port on the card so that you can later reconnect the cables to the correct ports.
4. If a card uses fiber-optic cable, immediately cover each transceiver and the end of each cable with a rubber safety cap. Arrange the disconnected cables in the cable management system, to prevent the cables from developing stress points.

WARNING: Do not look directly into a fiber-optic transceiver or into the ends of fiber-optic cables. Fiber-optic transceivers and fiber-optic cable connected to a transceiver emit laser light that can damage your eyes.

Copyright © 2014, Juniper Networks, Inc.



CAUTION: Do not leave a fiber-optic transceiver uncovered except when you are inserting or removing cable. The safety cap keeps the port clean and prevents accidental exposure to laser light.



CAUTION: Avoid bending fiber-optic cable beyond its minimum bend radius. An arc smaller than a few inches in diameter can damage the cable and cause problems that are difficult to diagnose.

5. For SCBs, observe these points regarding the ejector handles:
   - When removing or inserting an SCB, ensure that the SCBs or blank panels in adjacent slots are fully inserted to avoid hitting them with the ejector handles. The ejector handles require that all adjacent components be completely inserted so the ejector handles do not hit them, which could result in damage.
   - The ejector handles have a center of rotation and need to be stored toward the center of the board. Ensure the long ends of the ejectors located at both the top and the bottom of the board are vertical and pressed as far as possible toward the center of the board. Once you have installed an SCB, place the ejector handles in their proper position, vertically and toward the center of the board. To avoid blocking the visibility of the LEDs, position the ejectors over the PARK icon.
   - To insert or remove the SCB card, slide the ejector across the SCB horizontally, rotate it, and slide it again another quarter of a turn. Turn the ejector again and repeat as necessary. Use the indexing feature to maximize leverage and to avoid hitting any adjacent components.
6. Simultaneously turn both the ejector handles counterclockwise to unseat the card.
7. Grasp the handles and slide the card straight out of the card cage halfway.
8. Place one hand around the front of the card and the other hand under it to support it. Slide the IOC completely out of the chassis, and place it on the antistatic mat or in the electrostatic bag.



CAUTION: The weight of the card is concentrated in the back end. Be prepared to accept the full weight—up to 13.1 lb (5.9 kg)—as you slide the card out of the chassis.

When the card is out of the chassis, do not hold it by the ejector handles, bus bars, or edge connectors. They cannot support its weight.

Do not stack cards on top of one another after removal. Place each one individually in an electrostatic bag or on its own antistatic mat on a flat, stable surface.

Copyright © 2014, Juniper Networks, Inc.

Figure 35: Removing a Card (IOC Shown, Other Card Types Similar)

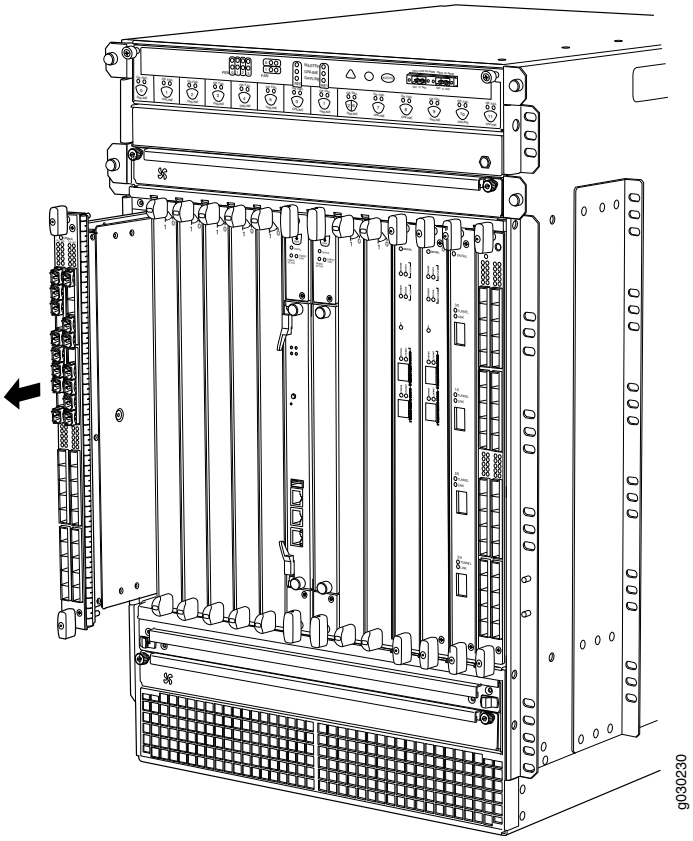

Related Documentation

- SRX5800 Services Gateway Chassis on page 7
- Tools Required to Install the SRX5800 Services Gateway on page 69
- Installing the SRX5800 Services Gateway Chassis in the Rack on page 76
- Reinstalling Components in the SRX5800 Services Gateway Chassis After Installing It in the Rack on page 79
- Troubleshooting the SRX5800 Services Gateway with Chassis and Interface Alarm Messages on page 136
- Chassis Lifting Guidelines on page 244
- SRX5800 Services Gateway Chassis Grounding Point Specifications on page 280

Installing the SRX5800 Services Gateway Chassis in the Rack

Because of the services gateway's size and weight—up to 400 lb (182 kg) depending on the configuration—you must install the services gateway using a mechanical lift.

CAUTION: **Before front mounting the services gateway in a rack, have a qualified technician verify that the rack is strong enough to support the**

Copyright © 2014, Juniper Networks, Inc.

services gateway's weight and is adequately supported at the installation site.

To install the services gateway using a lift (see Figure 36 on page 78):

1. Ensure the rack is in its permanent location and is secured to the building. Ensure that the installation site allows adequate clearance for both airflow and maintenance.
2. Load the services gateway onto the lift, making sure it rests securely on the lift platform.
3. Using the lift, position the services gateway in front of the rack or cabinet, centering it in front of the mounting shelves.
4. Lift the chassis approximately 0.75 in. above the surface of the mounting shelves and position it as close as possible to the shelves.
5. Carefully slide the services gateway onto the mounting shelves so that the bottom of the chassis and the mounting shelves overlap by approximately two inches.
6. Slide the services gateway onto the mounting shelves until the center-mounting brackets or front-mounting flanges contact the rack rails. The shelves ensure that the holes in the center-mounting brackets and the front-mounting flanges of the chassis align with the holes in the rack rails.
7. Move the lift away from the rack.
8. To install the services gateway in an open-frame rack, install a mounting screw into each of the open mounting holes aligned with the rack, starting from the bottom.
9. Visually inspect the alignment of the services gateway. If the services gateway is installed properly in the rack, all the mounting screws on one side of the rack should be aligned with the mounting screws on the opposite side and the services gateway should be level.

Copyright © 2014, Juniper Networks, Inc.

Figure 36: Installing the Services Gateway in the Rack

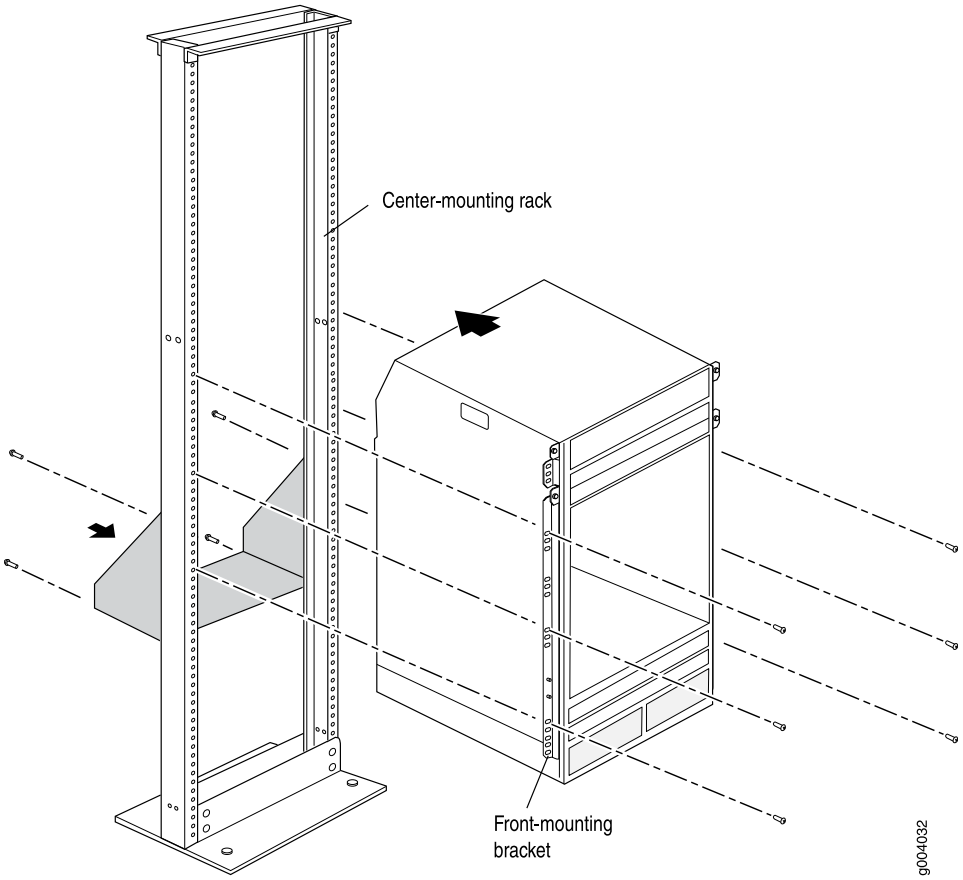

NOTE: This illustration depicts the services gateway being installed in an open-frame rack.

Related Documentation

- SRX5800 Services Gateway General Safety Guidelines and Warnings on page 237
- Site Preparation Checklist for the SRX5800 Services Gateway on page 49
- Tools Required to Install the SRX5800 Services Gateway on page 69
- Removing Components from the SRX5800 Chassis Before Installing It in the Rack on page 69
- Reinstalling Components in the SRX5800 Services Gateway Chassis After Installing It in the Rack on page 79
- Unpacking the SRX5800 Services Gateway on page 57

Copyright © 2014, Juniper Networks, Inc.

Reinstalling Components in the SRX5800 Services Gateway Chassis After Installing It in the Rack

After the services gateway is installed in the rack, reinstall the removed components before booting and configuring the services gateway. You reinstall components first in the rear of the chassis, and then in the front:

1. Reinstalling Power Supplies After Installing the SRX5800 Services Gateway Chassis on page 79
2. Reinstalling Fan Trays After Installing the SRX5800 Services Gateway Chassis on page 80
3. Reinstalling Cards After Installing the SRX5800 Services Gateway Chassis on page 82
4. Reinstalling the Cable Manager After Installing the SRX5800 Services Gateway Chassis on page 84

Reinstalling Power Supplies After Installing the SRX5800 Services Gateway Chassis

Reinstall the rightmost power supply first and then work your way to the left. To reinstall the AC or DC power supplies, follow this procedure for each power supply (see Figure 37 on page 80, which shows the installation of the DC power supplies):

1. Attach an ESD grounding strap to your bare wrist, and connect the strap to one of the ESD points on the chassis.

   Verify that the power supplies are switched off:

   - For an AC-powered services gateway, verify that the AC input switch on the chassis above each AC power supply is in the off (**O**) position. If the services gateway is equipped with high-capacity AC power supplies, also verify that the AC input switch on each power supply is in the off (**O**) position.
   - For DC-powered services gateway, verify that the DC circuit breaker on each power supply faceplate is in the off (**O**) position.

   We recommend verifying that the power supplies are switched off even though they are not connected to power sources.

2. Ensure that the release lever below the empty power supply slot is locked in the counterclockwise position (see Figure 37 on page 80).

   If necessary, pull the spring-loaded locking pin in the release lever away from the chassis and turn the release lever counterclockwise until it stops. Let go of the locking pin in the release lever. Ensure that the pin is seated inside the corresponding hole in the chassis.

3. Using both hands, slide the power supply straight into the chassis until the power supply is fully seated in the chassis slot. The power supply faceplate should be flush with any adjacent power supply faceplates.

   The small tab on the metal housing that is controlled by the release lever must be inside of the corresponding slot at the bottom of the power supply. This tab is used to pull the power supply down in the chassis slot, prior to removing the power supply.

Copyright © 2014, Juniper Networks, Inc.

4. While firmly pushing the handle on the power supply faceplate with one hand, use your other hand to pull the spring-loaded locking pin in the release lever away from the chassis and turn the release lever clockwise until it stops.
5. Let go of the locking pin in the release lever. Ensure that the pin is seated inside the corresponding hole in the chassis.

Figure 37: Reinstalling a Power Supply (Standard-Capacity Shown, High-Capacity Similar)

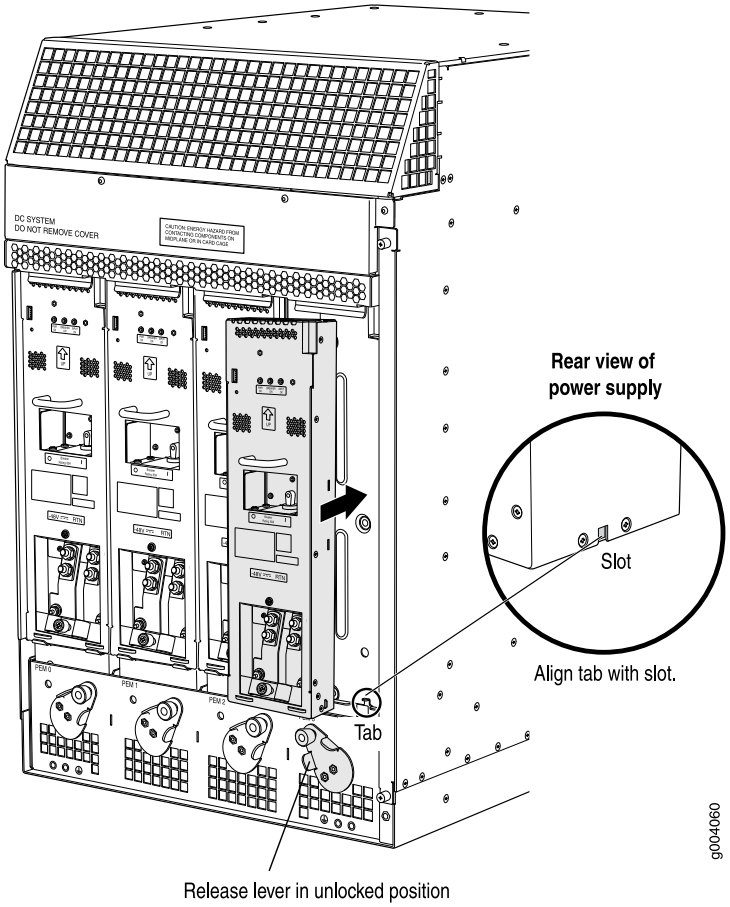

Reinstalling Fan Trays After Installing the SRX5800 Services Gateway Chassis

To reinstall the fan trays (see Figure 38 on page 81 and Figure 39 on page 82):

1. Attach an ESD grounding strap to your bare wrist, and connect the strap to one of the ESD points on the chassis.
2. Grasp the fan tray on each side and insert it straight into the chassis. Note the correct orientation by the "this side up" label on the top surface of the fan tray.
3. Tighten the captive screws on each side of the fan tray faceplate to secure it in the chassis.
4. Lower the standard cable manager back into position, if necessary.

Copyright © 2014, Juniper Networks, Inc.

Figure 38: Installing an Upper Fan Tray

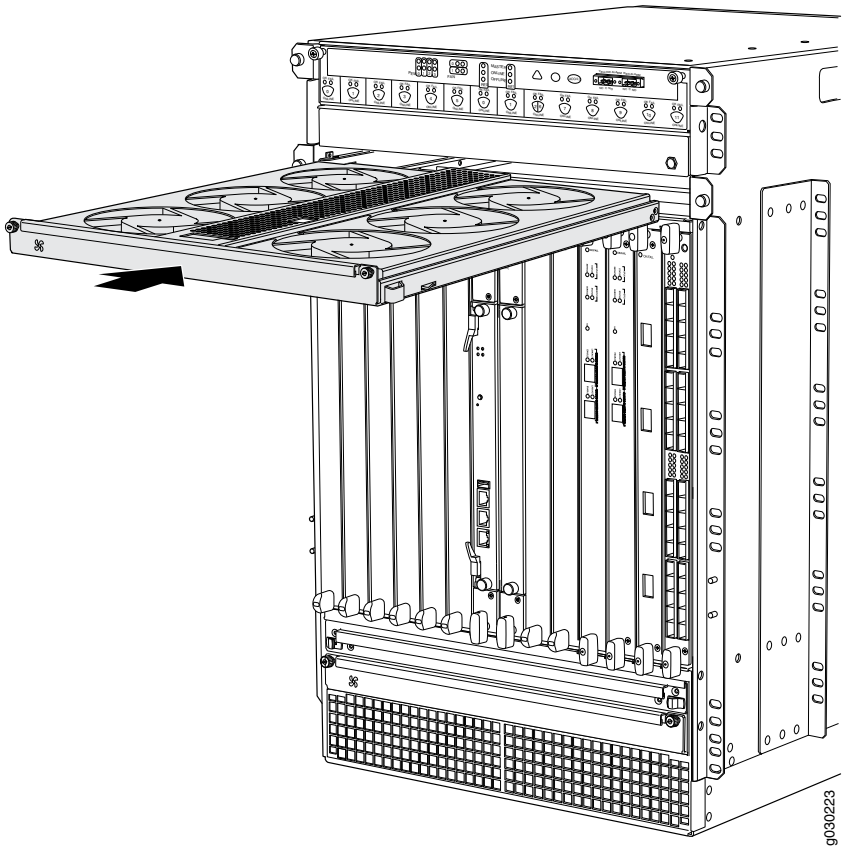

Copyright © 2014, Juniper Networks, Inc.

Figure 39: Installing a Lower Rear Fan Tray

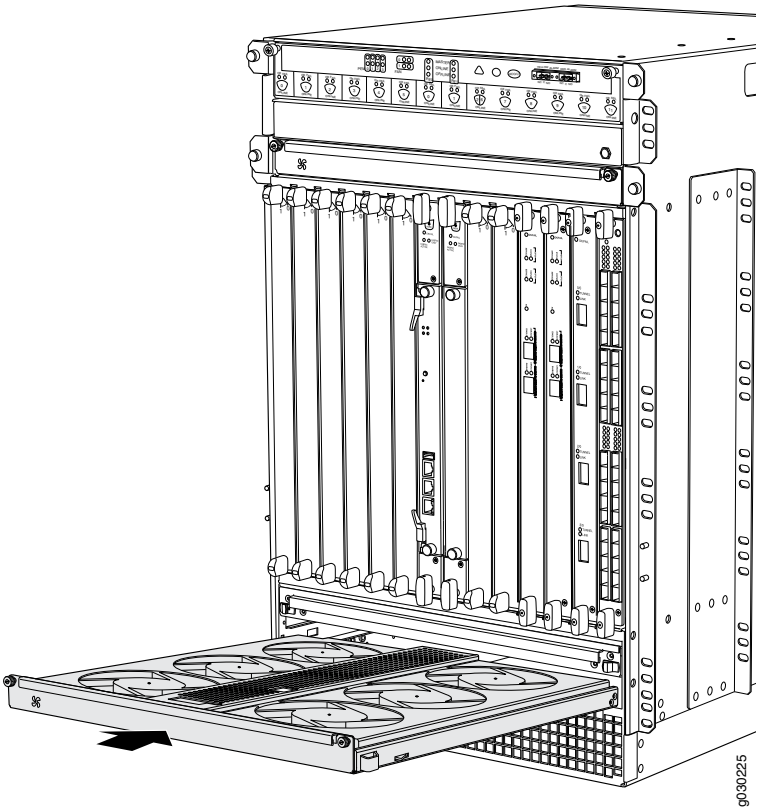

Reinstalling Cards After Installing the SRX5800 Services Gateway Chassis

To reinstall cards (IOCs, Flex IOCs, MPCs, SPCs, and SCBs (see Figure 40 on page 84):

1. Attach an ESD grounding strap to your bare wrist, and connect the strap to one of the ESD points on the chassis.
2. Take each card to be installed out of its electrostatic bag and identify the slot on the card cage where it will be connected.
3. Verify that each fiber-optic port has a rubber safety cap covering the transceiver. If it does not, cover the transceiver with a safety cap.
4. Locate the slot in the card cage in which you plan to install the card.
5. Ensure the card is right-side up, with the text on the faceplate of the card facing upward.
6. Lift the card into place and carefully align first the bottom, then the top of the card with the guides inside the card cage.
7. Slide the card all the way into the card cage until you feel resistance.
8. For SCBs, observe these points regarding the ejector handles:
   - When removing or inserting an SCB, ensure that the SCBs or blank panels in adjacent slots are fully inserted to avoid hitting them with the ejector handles. The ejector

Copyright © 2014, Juniper Networks, Inc.

handles require that all adjacent components be completely inserted so the ejector handles do not hit them, which could result in damage.

- The ejector handles have a center of rotation and need to be stored toward the center of the board. Ensure the long ends of the ejectors located at both the top and the bottom of the board are vertical and pressed as far as possible toward the center of the board. Once you have installed an SCB, place the ejector handles in their proper position, vertically and toward the center of the board. To avoid blocking the visibility of the LEDs,position the ejectors over the PARK icon.
- To insert or remove the SCB card, slide the ejector across the SCB horizontally, rotate it, and slide it again another quarter of a turn. Turn the ejector again and repeat as necessary. Use the indexing feature to maximize leverage and to avoid hitting any adjacent components.

9. Grasp both ejector handles and rotate them simultaneously clockwise until the card is fully seated.
10. Insert the appropriate cable into the cable connector ports on each card. Secure each cable so that it is not supporting its own weight. Place excess cable out of the way in a neatly coiled loop, using the cable management system. Placing fasteners on a loop helps to maintain its shape.



CAUTION: Do not let fiber-optic cable hang free from the connector. Do not allow fastened loops of cable to dangle, which stresses the cable at the fastening point.



CAUTION: Avoid bending fiber-optic cable beyond its minimum bend radius. An arc smaller than a few inches in diameter can damage the cable and cause problems that are difficult to diagnose.

Copyright © 2014, Juniper Networks, Inc.

Figure 40: Installing an IOC

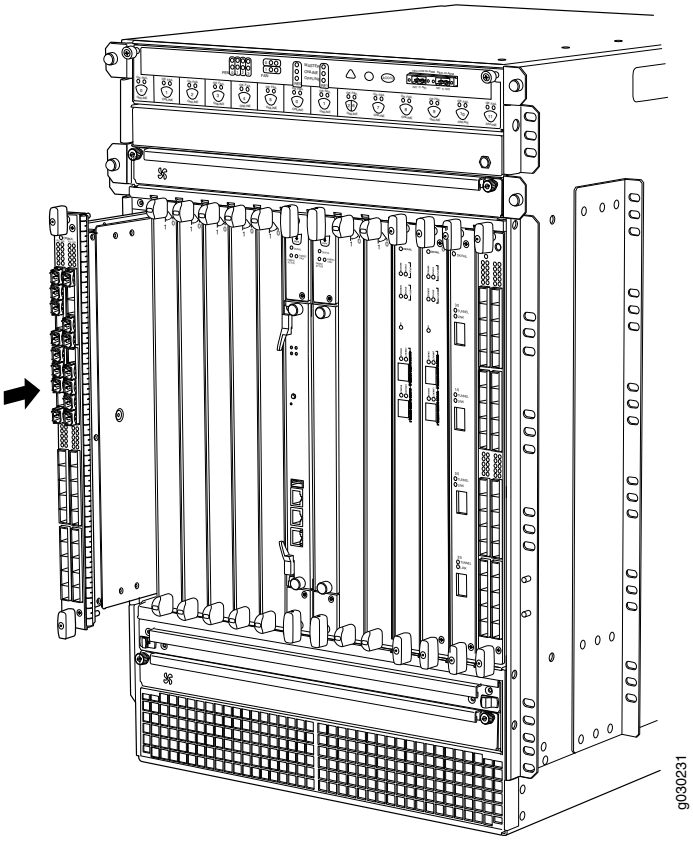

Reinstalling the Cable Manager After Installing the SRX5800 Services Gateway Chassis

To reinstall the cable manager (see Figure 41 on page 85):

1. Attach an ESD grounding strap to your bare wrist, and connect the strap to one of the ESD points on the chassis.
2. Position the cable manager on the studs on the lower front of the chassis.
3. Insert the nuts on the corners in the cable manager onto the studs on the chassis.
4. Using a 7/16-in. nut driver, tighten the nuts securely.

Copyright © 2014, Juniper Networks, Inc.

Figure 41: Reinstalling the Cable Manager

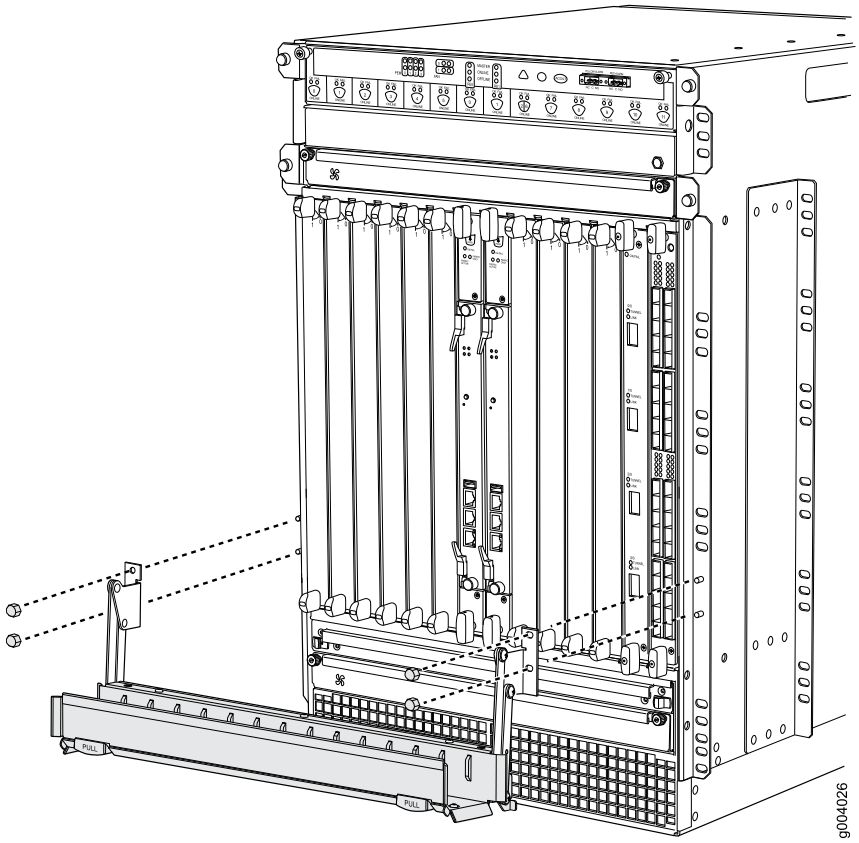

Related Documentation

- SRX5800 Services Gateway Chassis on page 7
- Tools Required to Install the SRX5800 Services Gateway on page 69
- Removing Components from the SRX5800 Chassis Before Installing It in the Rack on page 69
- Installing the SRX5800 Services Gateway Chassis in the Rack on page 76
- Troubleshooting the SRX5800 Services Gateway with Chassis and Interface Alarm Messages on page 136
- Chassis Lifting Guidelines on page 244
- SRX5800 Services Gateway Chassis Grounding Point Specifications on page 280

Copyright © 2014, Juniper Networks, Inc.

Copyright © 2014, Juniper Networks, Inc.

CHAPTER 8

Connecting the SRX5800 Services Gateway

- Tools and Parts Required for SRX5800 Services Gateway Connections on page 87
- Connecting the SRX5800 Services Gateway to Management and Alarm Devices on page 88
- Connecting Network Cables to SRX5800 Services Gateway IOCs and Port Modules on page 91

Tools and Parts Required for SRX5800 Services Gateway Connections

To connect the device to management devices and IOCs, you need the following tools and parts:

- Phillips (+) screwdrivers, numbers 1 and 2
- 2.5-mm flat-blade (-) screwdriver
- 2.5 mm Phillips (+) screwdriver
- Electrostatic discharge (ESD) grounding wrist strap

Related Documentation

- Overview of Installing the SRX5800 Services Gateway on page 47
- Connecting the SRX5800 Services Gateway to a Network for Out-of-Band Management on page 88
- Connecting the SRX5800 Services Gateway to a Management Console or an Auxiliary Device on page 89
- Connecting an SRX5800 Services Gateway to an External Alarm-Reporting Device on page 90
- Connecting Network Cables to SRX5800 Services Gateway IOCs and Port Modules on page 91

Copyright © 2014, Juniper Networks, Inc.

Connecting the SRX5800 Services Gateway to Management and Alarm Devices

- Connecting the SRX5800 Services Gateway to a Network for Out-of-Band Management on page 88
- Connecting the SRX5800 Services Gateway to a Management Console or an Auxiliary Device on page 89
- Connecting an SRX5800 Services Gateway to an External Alarm-Reporting Device on page 90

Connecting the SRX5800 Services Gateway to a Network for Out-of-Band Management

To connect the Services Gateway Routing Engine to a network for out-of-band management, connect an Ethernet cable with RJ-45 connectors to the **ETHERNET** port on the Routing Engine. One Ethernet cable is provided with the services gateway. To connect to the **ETHERNET** port on the Routing Engine:

1. Plug one end of the Ethernet cable (Figure 43 on page 88 shows the connector) into the **ETHERNET** port on the Routing Engine. Figure 42 on page 88 shows the port.
2. Plug the other end of the cable into the network device.

Figure 42: Ethernet Port

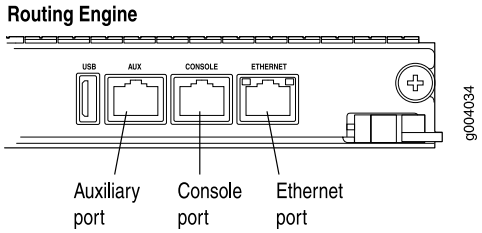

Figure 43: Routing Engine Ethernet Cable Connector

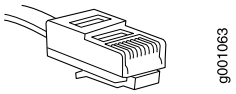

Related Documentation

- Overview of Installing the SRX5800 Services Gateway on page 47
- Tools and Parts Required for SRX5800 Services Gateway Connections on page 87
- Connecting the SRX5800 Services Gateway to a Management Console or an Auxiliary Device on page 89
- Connecting an SRX5800 Services Gateway to an External Alarm-Reporting Device on page 90
- Connecting Network Cables to SRX5800 Services Gateway IOCs and Port Modules on page 91

Copyright © 2014, Juniper Networks, Inc.

Connecting the SRX5800 Services Gateway to a Management Console or an Auxiliary Device

To use a system console to configure and manage the Routing Engine, connect it to the appropriate **CONSOLE** port on the Routing Engine. To use a laptop, modem, or other auxiliary device, connect it to the **AUX** port on the Routing Engine. Both ports accept a cable with an RJ-45 connector. One serial cable with an RJ-45 connector and a DB-9 connector is provided with the services gateway. To connect a device to the **CONSOLE** port and another device to the **AUX** port, you must supply an additional cable.

To connect a management console or auxiliary device:

1. Plug the RJ-45 end of the serial cable (Figure 45 on page 89 shows the connector) into the **AUX** port or **CONSOLE** port on the Routing Engine. Figure 44 on page 89 shows the ports.

Figure 44: Auxiliary and Console Ports

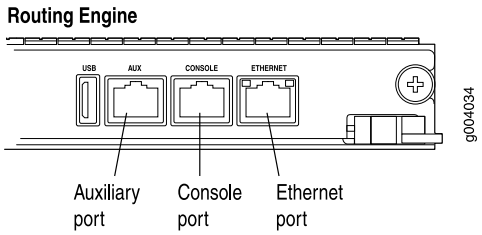

Figure 45: Routing Engine Console and Auxiliary Cable Connector

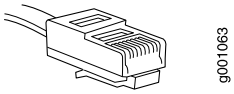

2. Plug the female DB-9 end into the device's serial port.

NOTE:

For console devices, configure the serial port to the following values:

- Baud rate—9600
- Parity—N
- Data bits—8
- Stop bits—1
- Flow control—none

Related Documentation

- Overview of Installing the SRX5800 Services Gateway on page 47
- Tools and Parts Required for SRX5800 Services Gateway Connections on page 87
- Connecting the SRX5800 Services Gateway to a Network for Out-of-Band Management on page 88

Copyright © 2014, Juniper Networks, Inc.

- Connecting an SRX5800 Services Gateway to an External Alarm-Reporting Device on page 90
- Connecting Network Cables to SRX5800 Services Gateway IOCs and Port Modules on page 91
- Console Port Cable and Wire Specifications for the SRX5800 Services Gateway on page 298
- RJ-45 Connector Pinouts for the SRX5800 Services Gateway Routing Engine Auxiliary and Console Ports on page 300

Connecting an SRX5800 Services Gateway to an External Alarm-Reporting Device

To connect the services gateway to external alarm-reporting devices, attach wires to the **RED** and **YELLOW** relay contacts on the craft interface. (See Figure 46 on page 90.) A system condition that triggers the red or yellow alarm LED on the craft interface also activates the corresponding alarm relay contact.

Figure 46: Alarm Relay Contacts

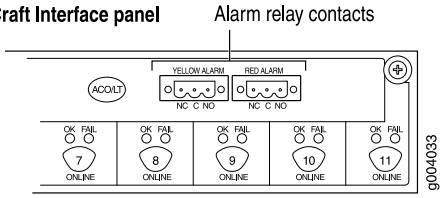

The terminal blocks that plug into the alarm relay contacts are supplied with the services gateway. They accept wire of any gauge between 28-AWG and 14-AWG (0.08 and 2.08 mm^2), which is not provided. Use the gauge of wire appropriate for the external device you are connecting.

To connect an external device to an alarm relay contact (see Figure 46 on page 90):

1. Prepare the required length of wire with gauge between 28-AWG and 14-AWG (0.08 and 2.08 mm^2).
2. While the terminal block is not plugged into the relay contact, use a 2.5-mm flat-blade screwdriver to loosen the small screws on its top. With the small screws on its top facing upward, insert wires into the slots in the front of the block based on the wiring for the external device. Tighten each screw to secure the corresponding wire.
3. Plug the terminal block into the relay contact, and use a 2.5-mm flat-blade screwdriver to tighten the screws on the face of the block. See Figure 47 on page 91.

Copyright © 2014, Juniper Networks, Inc.

Figure 47: Connecting an External Alarm-Reporting Device

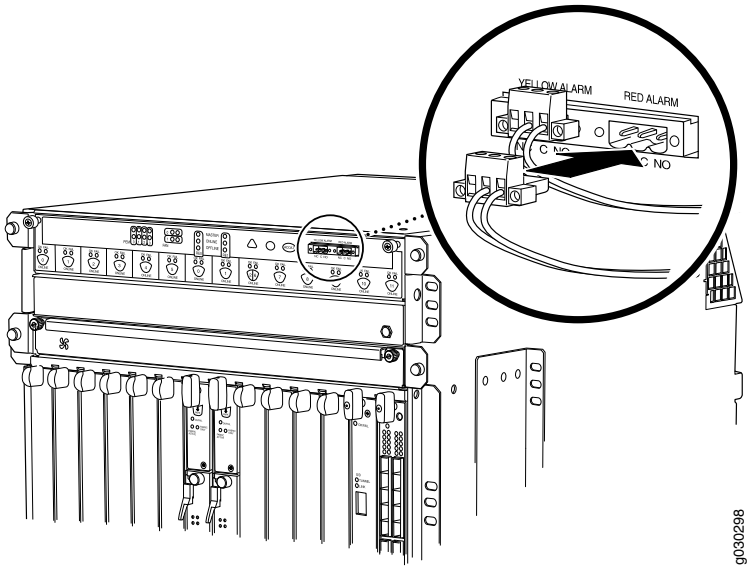

4. Attach the other end of the wires to the external device.

To attach a reporting device for the other kind of alarm, repeat the procedure.

Related Documentation

- Overview of Installing the SRX5800 Services Gateway on page 47
- SRX5800 Services Gateway Craft Interface Alarm Relay Contacts on page 26
- Tools and Parts Required for SRX5800 Services Gateway Connections on page 87
- Connecting the SRX5800 Services Gateway to a Network for Out-of-Band Management on page 88
- Connecting the SRX5800 Services Gateway to a Management Console or an Auxiliary Device on page 89
- Connecting Network Cables to SRX5800 Services Gateway IOCs and Port Modules on page 91
- Alarm Relay Contact Wire Specifications for the SRX5800 Services Gateway on page 298

Connecting Network Cables to SRX5800 Services Gateway IOCs and Port Modules

To connect the IOCs, MPCs, and port modules to the network (see Figure 48 on page 93):

1. Have ready a length of the type of cable used by the component.
2. Remove the rubber safety plug from the cable connector port.

WARNING: **Do not look directly into a fiber-optic transceiver or into the ends of fiber-optic cables. Fiber-optic transceivers and fiber-optic cable connected to a transceiver emit laser light that can damage your eyes.**

Copyright © 2014, Juniper Networks, Inc.



CAUTION: Do not leave a fiber-optic transceiver uncovered except when inserting or removing cable. The safety cap keeps the port clean and prevents accidental exposure to laser light.

3. Insert the cable connector into the cable connector port on the faceplate.



NOTE: The XFP cages and optics on the components are industry standard parts that have limited tactile feedback for insertion of optics and fiber. You need to insert the optics and fiber firmly until the latch is securely in place.

4. Arrange the cable in the standard or extended cable manager to prevent it from dislodging or developing stress points. Secure the cable so that it is not supporting its own weight as it hangs to the floor. Place excess cable out of the way in a neatly coiled loop. Placing fasteners on the loop helps to maintain its shape.



CAUTION: Avoid bending fiber-optic cable beyond its minimum bend radius. An arc smaller than a few inches in diameter can damage the cable and cause problems that are difficult to diagnose.



CAUTION: Do not let fiber-optic cable hang free from the connector. Do not allow fastened loops of cable to dangle, which stresses the cable at the fastening point.

Copyright © 2014, Juniper Networks, Inc.

Figure 48: Attaching a Cable to an IOC

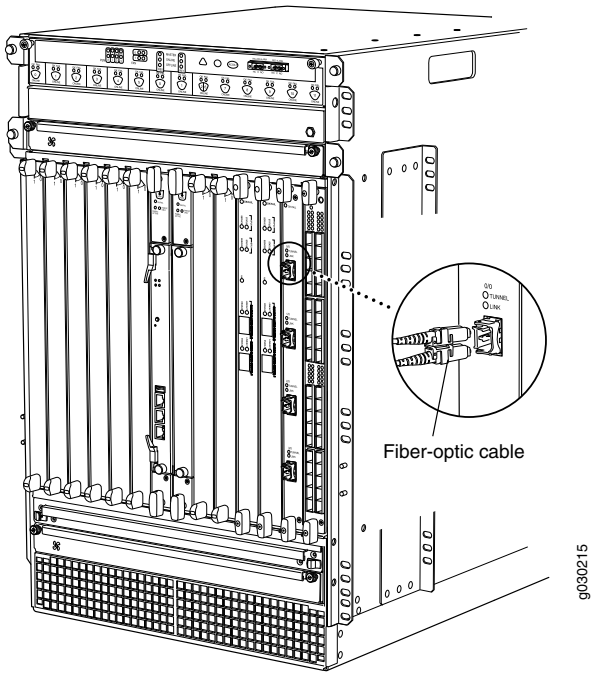

Related Documentation

- Overview of Installing the SRX5800 Services Gateway on page 47
- Tools and Parts Required for SRX5800 Services Gateway Connections on page 87
- Connecting the SRX5800 Services Gateway to a Network for Out-of-Band Management on page 88
- Connecting the SRX5800 Services Gateway to a Management Console or an Auxiliary Device on page 89
- Connecting an SRX5800 Services Gateway to an External Alarm-Reporting Device on page 90

Copyright © 2014, Juniper Networks, Inc.

Copyright © 2014, Juniper Networks, Inc.

CHAPTER 9

Grounding and Providing Power to the SRX5800 Services Gateway

- Tools and Parts Required for SRX5800 Services Gateway Grounding and Power Connections on page 95
- Grounding the SRX5800 Services Gateway on page 96
- Connecting Power to an AC-Powered SRX5800 Services Gateway on page 97
- Powering On an AC-Powered SRX5800 Services Gateway on page 101
- Connecting Power to a DC-Powered SRX5800 Services Gateway on page 102
- Powering On a DC-Powered SRX5800 Services Gateway on page 105
- Powering Off the SRX5800 Services Gateway on page 106

Tools and Parts Required for SRX5800 Services Gateway Grounding and Power Connections

To ground and provide power to the services gateway, you need the following tools and parts:

- Phillips (+) screwdrivers, numbers 1 and 2
- 2.5-mm flat-blade (–) screwdriver
- 7/16-in. hexagonal-head external drive socket wrench, or nut driver, with a torque range between 23 lb-in. (2.6 Nm) and 25 lb-in. (2.8 Nm) tightening torque, for tightening nuts to terminal studs on each power supply on a DC-powered services gateway.
- Wire cutters
- Electrostatic discharge (ESD) grounding wrist strap

Related Documentation

- Overview of Installing the SRX5800 Services Gateway on page 47
- Grounding the SRX5800 Services Gateway on page 96
- Connecting Power to an AC-Powered SRX5800 Services Gateway on page 97
- Connecting Power to a DC-Powered SRX5800 Services Gateway on page 102

Copyright © 2014, Juniper Networks, Inc.

Grounding the SRX5800 Services Gateway



WARNING: **To meet safety and electromagnetic interference (EMI) requirements and to ensure proper operation, you must properly ground the services gateway chassis before connecting power.**

You ground the services gateway by connecting a grounding cable to earth ground and then attaching it to one of the chassis grounding points using two screws. You must provide the grounding cable (the cable lug is supplied with the services gateway).

1. Verify that a licensed electrician has attached the cable lug provided with the services gateway to the grounding cable.
2. Attach an ESD grounding strap to your bare wrist and connect the strap to an approved site ESD grounding point. See the instructions for your site.
3. Ensure that all grounding surfaces are clean and brought to a bright finish before grounding connections are made.
4. Connect the grounding cable to a proper earth ground.
5. Detach the ESD grounding strap from the site ESD grounding point.
6. Attach an ESD grounding strap to your bare wrist, and connect the strap to one of the ESD points on the chassis.
7. Place the grounding cable lug over one of the two grounding points. The right pair is sized for UNC 1/4-20 screws and 1/4 in. split washers, which are provided in the accessory box. The left pair is sized for M6 metric screws. If you wish to use the metric-sized grounding point, you must provide appropriate screws and split washers.
8. Secure the grounding cable lug to the grounding point, first with the washers, and then with the screws as shown in Figure 49 on page 97.

Copyright © 2014, Juniper Networks, Inc.

Figure 49: Connecting the Grounding Cable

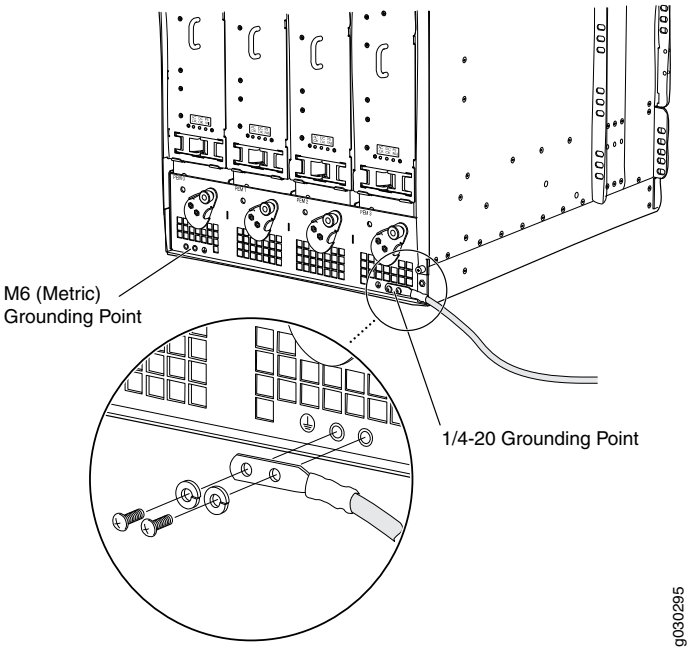

9. Dress the grounding cable and verify that it does not touch or block access to services gateway components, and that it does not drape where people could trip on it.

Related Documentation

- Preventing Electrostatic Discharge Damage to the SRX5800 Services Gateway on page 241
- Overview of Installing the SRX5800 Services Gateway on page 47
- Tools and Parts Required for SRX5800 Services Gateway Grounding and Power Connections on page 95
- Connecting Power to an AC-Powered SRX5800 Services Gateway on page 97
- Connecting Power to a DC-Powered SRX5800 Services Gateway on page 102
- SRX5800 Services Gateway Chassis Grounding Point Specifications on page 280
- SRX5800 Services Gateway Grounding-Cable Lug Specification on page 281
- SRX5800 Services Gateway Grounding Cable Specifications on page 282

Connecting Power to an AC-Powered SRX5800 Services Gateway

WARNING: To meet safety and electromagnetic interference (EMI) requirements and to ensure proper operation, you must properly ground the services gateway chassis before connecting power. See "Grounding the SRX5800 Services Gateway" on page 96 for instructions.

Copyright © 2014, Juniper Networks, Inc.

CAUTION: Do not mix AC and DC power supplies within the same services gateway. Damage to the services gateway might occur.

You connect AC power to the device by attaching power cords from the AC power sources to the AC appliance inlets located on the chassis above the power supplies. If the services gateway is powered by high-capacity power supplies, you also connect AC feeds to AC appliance inlets located on the power supplies themselves. The power cords are not provided with the services gateway; you must order them separately.

To connect the AC power cords to the services gateway (see Figure 50 on page 99 and Figure 51 on page 100):

1. Locate or obtain the power cords you will use with the services gateway. The power cords must have a plug appropriate for your geographical location.
2. Attach an ESD grounding strap to your bare wrist, and connect the strap to one of the ESD points on the chassis.
3. Move the AC input switch on the chassis above each power supply to the off (**O**) position. If the services gateway is equipped with high-capacity AC power supplies, you must also move the AC input switch on each power supply to the off (**O**) position.
4. For each installed AC power supply, connect a power cord to the appliance inlet on the chassis directly above the power supply.
5. If your services gateway is equipped with high-capacity AC power supplies, you must also connect a power cord to the appliance inlet located on each power supply.
6. Insert the power cord plugs into an external AC power source receptacle.

   NOTE: Each power supply must be connected to a dedicated AC power feed and a dedicated customer site circuit breaker. We recommend that you use a 15 A (250 VAC) minimum, or as required by local code.

7. Dress the power cords appropriately. Verify that the power cords do not block the air exhaust and access to services gateway components, or drape where people could trip on them.
8. Repeat Step 3 through Step 7 for the remaining power supplies.

Copyright © 2014, Juniper Networks, Inc.

Figure 50: Connecting AC Power to the Services Gateway (Standard-Capacity Power Supplies)

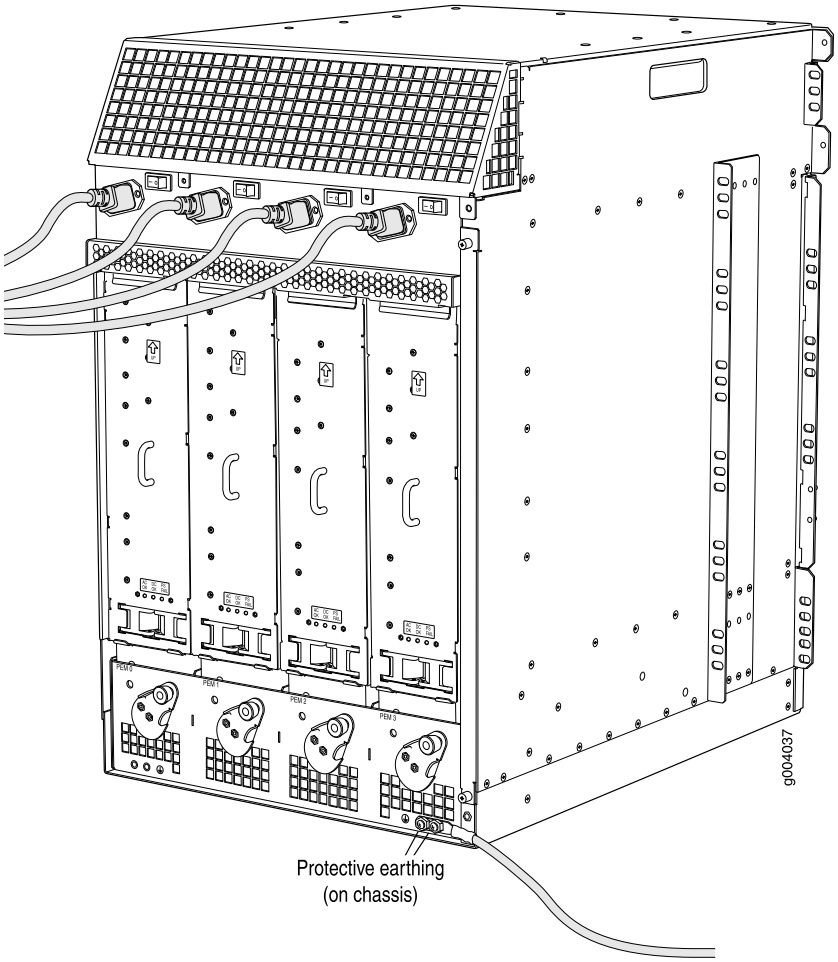

Figure 51: Connecting AC Power to the Services Gateway (High-Capacity Power Supplies)

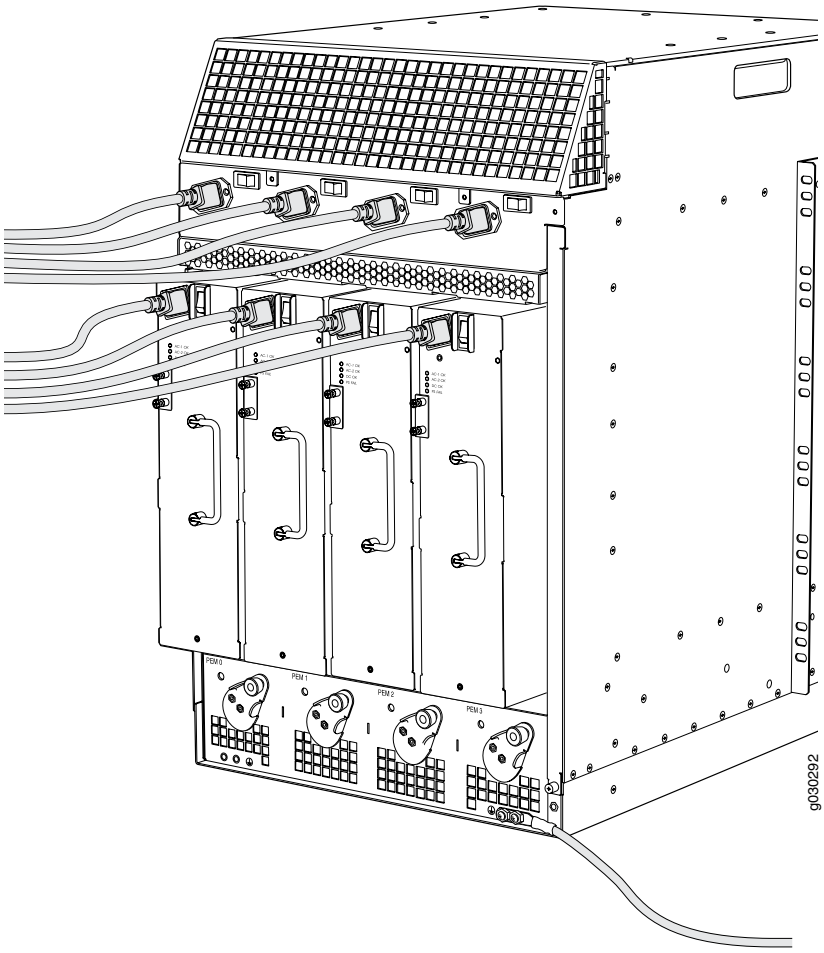

Related Documentation

- AC Power Cord Specifications for the SRX5800 Services Gateway on page 284
- Preventing Electrostatic Discharge Damage to the SRX5800 Services Gateway on page 241
- Overview of Installing the SRX5800 Services Gateway on page 47
- Tools and Parts Required for SRX5800 Services Gateway Grounding and Power Connections on page 95
- Grounding the SRX5800 Services Gateway on page 96
- Powering On an AC-Powered SRX5800 Services Gateway on page 101
- Powering Off the SRX5800 Services Gateway on page 106

Copyright © 2014, Juniper Networks, Inc.

Powering On an AC-Powered SRX5800 Services Gateway

To power on an AC-powered services gateway:

1. Verify that the power supplies are fully inserted in the chassis.
2. Verify that each AC power cord is securely inserted into its appliance inlet.
3. Verify that an external management device is connected to one of the Routing Engine ports (**AUX**, **CONSOLE**, or **ETHERNET**).
4. Turn on the power to the external management device.
5. Switch on the dedicated customer site circuit breakers. Follow the ESD and safety instructions for your site.
6. Attach an ESD grounding strap to your bare wrist, and connect the strap to one of the ESD points on the chassis.
7. Switch the AC switch in the chassis above each power supply to the on (—) position.
8. If the services gateway has high-capacity power supplies installed, you must also move the AC switch at the top of each power supply to the on (|) position.
9. Verify the following LED indications for each installed power supply:
   - For standard-capacity AC power supplies, verify that the **AC OK** and **DC OK** LEDs light steadily and the **PS FAIL** LED is not lit.
   - For high-capacity AC power supplies, verify that the **DC OK** LED lights steadily, and the **PS FAIL** LED is not lit. In addition, the **AC-1 OK** LED should light green steadily if the upper AC feed (on the chassis above the power supply) is connected and receiving power, and the **AC-2 OK** LED should light green steadily if the lower AC feed (on the power supply itself) is connected and receiving power.

   

   NOTE: After a power supply is powered on, it can take up to 60 seconds for status indicators—such as the status LEDs on the power supply and the **show chassis** command display—to indicate that the power supply is functioning normally. Ignore error indicators that appear during the first 60 seconds.

   If any of the status LEDs indicates that the power supply is not functioning normally, repeat the installation and cabling procedures.
10. On the external management device connected to the Routing Engine, monitor the startup process to verify that the system has booted properly.

Copyright © 2014, Juniper Networks, Inc.

NOTE: If the system is completely powered off when you power on the power supply, the Routing Engine boots as the power supply completes its startup sequence. Normally, the services gateway boots from the Junos OS imageon the CompactFlash card.

After you have powered on a power supply, wait at least 60 seconds before you power it off.

Related Documentation

- Preventing Electrostatic Discharge Damage to the SRX5800 Services Gateway on page 241
- Overview of Installing the SRX5800 Services Gateway on page 47
- Tools and Parts Required for SRX5800 Services Gateway Grounding and Power Connections on page 95
- Grounding the SRX5800 Services Gateway on page 96
- Connecting Power to an AC-Powered SRX5800 Services Gateway on page 97
- Powering Off the SRX5800 Services Gateway on page 106

Connecting Power to a DC-Powered SRX5800 Services Gateway

WARNING: Before performing DC power procedures, ensure that power is removed from the DC circuit. To ensure that all power is off, locate the circuit breaker on the panel board that services the DC circuit, switch the circuit breaker to the off position, and tape the switch handle of the circuit breaker in the off position.

WARNING: To meet safety and electromagnetic interference (EMI) requirements and to ensure proper operation, you must properly ground the services gateway chassis before connecting power. See "Grounding the SRX5800 Services Gateway" on page 96 for instructions.

CAUTION: Do not mix AC and DC power supplies within the same services gateway. Damage to the services gateway might occur.

You connect DC power to the services gateway by attaching power cables from the external DC power sources to the terminal studs on the power supply faceplates. You must provide the power cables (the cable lugs are supplied with the services gateway).

Copyright © 2014, Juniper Networks, Inc.

To connect the DC source power cables to the services gateway:

1. Switch off the dedicated customer site circuit breakers. Ensure that the voltage across the DC power source cable leads is 0 V and that there is no chance that the cable leads might become active during installation.
2. Attach an ESD grounding strap to your bare wrist, and connect the strap to one of the ESD points on the chassis.
3. Move the DC circuit breaker on the power supply faceplate to the off (**O**) position.
4. Remove the clear plastic cover protecting the terminal studs on the faceplate.
5. Verify that the DC power cables are correctly labeled before making connections to the power supply. In a typical power distribution scheme where the return is connected to chassis ground at the battery plant, you can use a multimeter to verify the resistance of the **–48V** and **RTN** DC cables to chassis ground:
   - The cable with very large resistance (indicating an open circuit) to chassis ground is **–48V**.
   - The cable with very low resistance (indicating a closed circuit) to chassis ground is **RTN**.

   CAUTION: **You must ensure that power connections maintain the proper polarity. The power source cables might be labeled (+) and (–) to indicate their polarity. There is no standard color coding for DC power cables. The color coding used by the external DC power source at your site determines the color coding for the leads on the power cables that attach to the terminal studs on each power supply.**
6. Remove the nuts and washers from the terminal studs. (Use a 7/16-in. nut driver or socket wrench.)
7. Secure each power cable lug to the terminal studs, first with the split washer, then with the nut (see Figure 52 on page 104). Apply between 23 lb-in. (2.6 Nm) and 25 lb-in. (2.8 Nm) of torque to each nut. (Use a 7/16-in. nut driver or socket wrench.)
   a. Secure each positive (+) DC source power cable lug to the **RTN** (return) terminal.
   b. Secure each negative (–) DC source power cable lug to the **–48V** (input) terminal.

   The DC power supplies in slots **PEM0** and **PEM1** must be powered by dedicated power feeds derived from feed A, and the DC power supplies in slots **PEM2** and **PEM3** must be powered by dedicated power feeds derived from feed B. This configuration provides the commonly deployed A/B feed redundancy for the system.

Copyright © 2014, Juniper Networks, Inc.

8. For standard-capacity DC power supplies, secure each DC power cable to its strain relief bracket as follows:

   a. Loosen the captive screw on the cable restraint on the lower edge of the power supply faceplate.

   b. Route the positive and negative DC power cables through the left and right sides of the cable restraint.

   c. Tighten the cable restraint captive screw to hold the power cables in place.

9. Replace the clear plastic cover over the terminal studs on the faceplate.

10. Verify that the power cables are connected correctly, that they are not touching or blocking access to services gateway components, and that they do not drape where people could trip on them.

11. Repeat Steps 3 through 10 for the remaining power supplies.

Figure 52: Connecting DC Power to the Services Gateway (Standard-Capacity SHown, High-Capacity Similar)

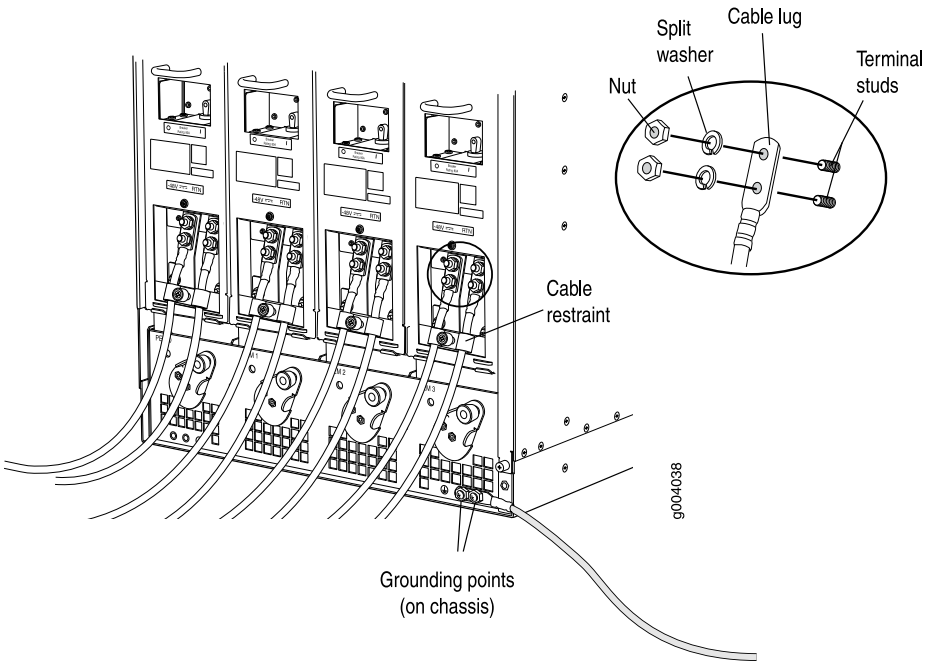

Related Documentation

- Preventing Electrostatic Discharge Damage to the SRX5800 Services Gateway on page 241
- Overview of Installing the SRX5800 Services Gateway on page 47
- Tools and Parts Required for SRX5800 Services Gateway Grounding and Power Connections on page 95
- Grounding the SRX5800 Services Gateway on page 96
- Powering On a DC-Powered SRX5800 Services Gateway on page 105

Copyright © 2014, Juniper Networks, Inc.

- Powering Off the SRX5800 Services Gateway on page 106

Powering On a DC-Powered SRX5800 Services Gateway

To power on a DC-powered services gateway:

1. Verify that an external management device is connected to one of the Routing Engine ports (**AUX**, **CONSOLE**, or **ETHERNET**).
2. Turn on the power to the external management device.
3. Verify that the power supplies are fully inserted in the chassis.
4. Verify that the source power cables are connected to the appropriate terminal: the positive (+) source cable to the return terminal (labeled **RTN**) and the negative (–) source cable to the input terminal (labeled **–48V**).
5. Switch on the dedicated customer site circuit breakers to provide power to the DC power cables. Follow your site's procedures.
6. Check the **INPUT OK** LED is lit steadily green to verify that power is present.
7. If power is not present:
   - Verify that the fuse is installed correctly and turn on the breaker at the battery distribution fuse board or fuse bay.
   - Check the voltage with a meter at the terminals of the power supply for correct voltage level and polarity.
8. Attach an ESD grounding strap to your bare wrist, and connect the strap to one of the ESD points on the chassis.
9. Move the DC circuit breaker on the DC power supplies to the on (|) position.
10. Verify that the **BREAKER ON** LED is lit green steadily.
11. Verify that the **PWR OK** LED is lit green steadily, indicating the power supply is correctly installed and functioning normally.

    NOTE: After a power supply is powered on, it can take up to 60 seconds for status indicators—such as the status LEDs on the power supply and the show chassis command display—to indicate that the power supply is functioning normally. Ignore error indicators that appear during the first 60 seconds.

    If any of the status LEDs indicates that the power supply is not functioning normally, repeat the installation and cabling procedures .
12. On the external management device connected to the Routing Engine, monitor the startup process to verify that the system has booted properly.

Copyright © 2014, Juniper Networks, Inc.

NOTE: If the system is completely powered off when you power on the power supply, the Routing Engine boots as the power supply completes its startup sequence. Normally, the services gateway boots from the Junos OS image on the CompactFlash card.

After powering on a power supply, wait at least 60 seconds before turning it off.

Related Documentation

- Preventing Electrostatic Discharge Damage to the SRX5800 Services Gateway on page 241
- Overview of Installing the SRX5800 Services Gateway on page 47
- Tools and Parts Required for SRX5800 Services Gateway Grounding and Power Connections on page 95
- Grounding the SRX5800 Services Gateway on page 96
- Connecting Power to a DC-Powered SRX5800 Services Gateway on page 102
- Powering Off the SRX5800 Services Gateway on page 106

Powering Off the SRX5800 Services Gateway

NOTE: After powering off a power supply, wait at least 60 seconds before turning it back on.

To power off the services gateway:

1. On the external management device connected to the Routing Engine, issue the **request system halt** operational mode command. The command shuts down the Routing Engine cleanly, so its state information is preserved.

   ```
   user@host> request system halt
   ```

2. Wait until a message appears on the console confirming that the operating system has halted.

   For more information about the command, see *Junos OS System Basics and Services Command Reference* at www.juniper.net/techpubs/.

3. Attach an ESD grounding strap to your bare wrist, and connect the strap to one of the ESD points on the chassis.
4. Switch off the power supplies:
   - For an AC-powered services gateway, move the AC input switch on the chassis above each AC power supply to the off (**O**) position. If the services gateway is equipped with high-capacity AC power supplies, you must also move the AC input switch on each power supply to the off (**O**) position.

Copyright © 2014, Juniper Networks, Inc.

- For a DC-powered services gateway, move the DC circuit breaker on each DC power supply faceplate to the off (**O**) position.

Related Documentation

- Preventing Electrostatic Discharge Damage to the SRX5800 Services Gateway on page 241
- Overview of Installing the SRX5800 Services Gateway on page 47
- Powering On an AC-Powered SRX5800 Services Gateway on page 101
- Powering On a DC-Powered SRX5800 Services Gateway on page 105

Copyright © 2014, Juniper Networks, Inc.

Copyright © 2014, Juniper Networks, Inc.

CHAPTER 10

Configuring Junos OS for the SRX5800 Services Gateway

- SRX5800 Services Gateway Software Configuration Overview on page 109
- Initially Configuring the SRX5800 Services Gateway on page 110
- Performing Initial Software Configuration Using J-Web on page 113

SRX5800 Services Gateway Software Configuration Overview

The services gateway is shipped with the Junos operating system (Junos OS) preinstalled and ready to be configured when the device is powered on. There are three copies of the software: one on a CompactFlash card (if installed) in the Routing Engine, one on the hard disk in the Routing Engine, and one on a USB flash drive that can be inserted into the slot in the Routing Engine faceplate.

When the device boots, it first attempts to start the image on the USB flash drive. If a USB flash drive is not inserted into the Routing Engine or the attempt otherwise fails, the device next tries the CompactFlash card (if installed), and finally the hard disk.

You configure the services gateway by issuing Junos OS command-line interface (CLI) commands, either on a console device attached to the **CONSOLE** port on the Routing Engine, or over a telnet connection to a network connected to the **ETHERNET** port on the Routing Engine.

Gather the following information before configuring the device:

- Name the device will use on the network
- Domain name the device will use
- IP address and prefix length information for the Ethernet interface
- IP address of a default router
- IP address of a DNS server
- Password for the root user

Related Documentation

- Initially Configuring the SRX5800 Services Gateway on page 110

Copyright © 2014, Juniper Networks, Inc.

Initially Configuring the SRX5800 Services Gateway

This procedure connects the device to the network but does not enable it to forward traffic. For complete information about enabling the device to forward traffic, including examples, see the appropriate Junos OS configuration guides.

To configure the software:

1. Verify that the device is powered on.
2. Log in as the root user. There is no password.
3. Start the CLI.

   ```
   root# cli
   root@>
   ```

4. Enter configuration mode.

   ```
   configure
   [edit]
   root@#
   ```

5. Set the root authentication password by entering either a cleartext password, an encrypted password, or an SSH public key string (DSA or RSA).

   ```
   [edit]
   root@# set system root-authentication plain-text-password
   New password: password
   Retype new password: password
   ```

6. Configure an administrator account on the device. When prompted, enter the password for the administrator account.

   ```
   [edit]
   root@# set system login user admin class super-user authentication
     plain-text-password
   New password: password
   Retype new password: password
   ```

7. Commit the configuration to activate it on the device.

   ```
   [edit]
   root@# commit
   ```

8. Log in as the administrative user you configured in step 6.
9. Configure the name of the device. If the name includes spaces, enclose the name in quotation marks (“ ”).

   ```
   configure
   [edit]
   admin@# set system host-name host-name
   ```

10. Configure the IP address and prefix length for the Ethernet management interface on the services gateway’s Routing Engine.

    ```
    [edit]
    admin@# set interfaces fxp0 unit 0 family inet address address/prefix-length
    ```


Copyright © 2014, Juniper Networks, Inc.

11. Configure the traffic interface.

    ```
    [edit]
    admin@# set interfaces ge-6/2/0 unit 0 family inet address address/prefix-length
    admin@# set interfaces ge-6/3/5 unit 0 family inet address address/prefix-length
    ```

12. Configure the default route.

    ```
    [edit]
    admin@# set routing-options static route 0.0.0.0/0 next-hop gateway
    ```

13. Configure basic security zones and bind them to traffic interfaces.

    ```
    [edit]
    admin@# set security zones security-zone trust interfaces ge-6/3/5
    admin@# set security zones security-zone untrust interfaces ge-6/2/0
    ```

14. Configure basic security policies.

    ```
    [edit]
    admin@# set security policies from-zone trust to-zone untrust policy policy-name
      match source-address any destination-address any application any
    root@# set security policies from-zone trust to-zone untrust policy policy-name then
      permit
    ```

15. Check the configuration for validity.

    ```
    [edit]
    admin@# commit check
    configuration check succeeds
    ```

16. Commit the configuration to activate it on the device.

    ```
    [edit]
    admin@# commit
    commit complete
    ```

17. Optionally, display the configuration to verify that it is correct.

```
admin@# show
## Last changed: 2008-05-07 22:43:25 UTC
version "9.2I0 [builder]";
system {
    autoinstallation;
    host-name henbert;
    root-authentication {
       encrypted-password "$1$oTVn2KY3$uQe4xzQCxpR2j7sKuV.Pa0"; ## SECRET-DATA

    }
    login {
        user admin {
            uid 928;
            class super-user;
            authentication {
                encrypted-password "$1$cdOPmACd$QvreBsJkNR1EFOuurTBkE."; ##
SECRET-DATA
            }
        }
    }
    services {
        ssh;
       web-management {
            http {
```

```
                    interface ge-0/0/0.0;
                }
            }
        }
        syslog {
            user * {
                any emergency;
            }
            file messages {
                any any;
                authorization info;
            }
            file interactive-commands {
                interactive-commands any;
            }
        }
        license {
            autoupdate {
                url https://ae1.juniper.net/junos/key_retrieval;
            }
        }
    }
    interfaces {
        ge-0/0/0 {
            unit 0;
        }
        ge-6/2/0 {
            unit 0 {
                family inet {
                    address 5.1.1.1/24;
                }
            }
        }
        ge-6/3/5 {
            unit 0 {
                family inet {
                    address 192.1.1.1/24;
                }
            }
        }
        fxp0 {
            unit 0 {
                family inet {
                    address 192.168.10.2/24;
                }
            }
        }
    }
    routing-options {
        static {
            route 0.0.0.0/0 next-hop 5.1.1.2;
        }
    }
    security {
        zones {
            security-zone trust {
                interfaces {
                    ge-6/3/5.0;
                }
            }
            security-zone untrust {
```


Copyright © 2014, Juniper Networks, Inc.

```
            interfaces {
                ge-6/2/0.0;
            }
        }
    }
    policies {
        from-zone trust to-zone untrust {
            policy bob {
                match {
                    source-address any;
                    destination-address any;
                    application any;
                }
                then {
                    permit;
                }
            }
        }
    }
}
```

18. Commit the configuration to activate it on the device.

    ```
    [edit]
    admin@# commit
    ```

19. Optionally, configure additional properties by adding the necessary configuration statements. Then commit the changes to activate them on the device.

    ```
    [edit]
    admin@# commit
    ```

20. When you have finished configuring the device, exit configuration mode.

    ```
    [edit]
    admin@# exit
    admin@host>
    ```

Related Documentation

- SRX5800 Services Gateway Software Configuration Overview on page 109
- Powering On an AC-Powered SRX5800 Services Gateway on page 101
- Powering On a DC-Powered SRX5800 Services Gateway on page 105

Performing Initial Software Configuration Using J-Web

- Configuring Root Authentication and the Management Interface from the CLI on page 114
- Configuring Interfaces, Zones, and Policies with J-Web on page 114

Copyright © 2014, Juniper Networks, Inc.

Configuring Root Authentication and the Management Interface from the CLI

Before you can use J-Web to configure your device, you must access the CLI to perform the initial configuration.

To configure root authentication and the management interface:

1. Log in as root. There is no password.
2. Start the CLI and enter configuration mode.

   ```
   root@% cli
   root@>configure
   root@#
   ```

3. Set the root authentication password by entering a cleartext password, an encrypted password, or an SSH public key string (DSA or RSA).

   ```
   [edit]
   root@# set system root-authentication plain-text-password
   New password: password
   Retype new password: password
   ```

4. Commit the configuration to activate it on the device.

   ```
   [edit]
   root@# commit
   ```

5. Configure the IP address and prefix length for the Ethernet management interface on the device.

   ```
   [edit]
   root@# set interfaces fxp0 unit 0 family inet address address/prefix-length
   ```

6. Configure the default route.

   ```
   [edit]
   root@# set routing-options static route 0.0.0.0/0 next-hop gateway
   ```

7. Enable Web access to launch J-Web.

   ```
   [edit]
   root@# set system services web-management http
   ```

8. Commit the configuration changes.

   ```
   [edit]
   root@# commit
   ```

Configuring Interfaces, Zones, and Policies with J-Web

You can configure hostnames, interfaces, zones, and security policies using J-Web.

Before you begin:

- Ensure you have configured the IP address, root authentication, and default route. See "Configuring Root Authentication and the Management Interface from the CLI" on page 114

Copyright © 2014, Juniper Networks, Inc.

- Enable HTTP on the device to access J-Web. See "Configuring Root Authentication and the Management Interface from the CLI" on page 114

Configure the device with J-Web using the following procedures.

- Configuring the Hostname on page 115
- Configuring Interfaces on page 115
- Configuring Zones and Assigning Interfaces on page 116
- Configuring Security Policies on page 116

Configuring the Hostname

To configure the hostname:

1. Launch a Web browser from the management device.
2. Enter the IP address of the device in the URL address field.
3. Specify the default username as root and enter the password. See "Configuring Root Authentication and the Management Interface from the CLI" on page 114.
4. Click **Log In**. The J-Web Dashboard page appears.
5. Select **Configure>System Properties>System Identity**, and then select **Edit**. The Edit System Identity dialog box appears.
6. Enter the hostname and click **OK**.
7. Select **Commit Options>Commit** to apply the configuration changes.

You have successfully configured the hostname for the system.

Configuring Interfaces

To configure two physical interfaces:

1. From the J-Web Dashboard page, select **Configure>Interfaces** and select a physical interface you want to configure.
2. Select **Add>Logical Interface**. The Add interface dialog box appears.
3. Set **Unit** = **0**.
4. Select the check box for **IPv4 Address** to enable IPv4 addressing.
5. Click **Add** and enter the IPv4 address.
6. Click **OK**.

   A message appears after your configuration changes are validated successfully.
7. Click **OK**.
8. Select **Commit Options>Commit** to apply the configuration changes.

   A message appears after your configuration changes are applied successfully.
9. Click **OK**.

Copyright © 2014, Juniper Networks, Inc.

You have successfully configured the physical interface. Repeat these steps to configure the second physical interface for the device.

Configuring Zones and Assigning Interfaces

To assign interfaces within a trust zone and an untrust zone:

1. From the J-Web Dashboard page, select **Configure>Security>Zones/Screens** and click **Add**. The Add Zone dialog box appears.
2. In the Main tab, enter **trust** for zone name and enter the description.
3. Set the zone type to **Security**.
4. Select the interfaces listed under Available and move them under Selected.
5. Click **OK**.

   A message appears after your configuration changes are validated successfully.
6. Click **OK**.
7. Select **Commit Options>Commit** to apply the configuration changes.

   A message appears after your configuration changes are applied successfully.
8. Click **OK**.
9. Repeat Steps 1 through 8 and assign another interface to an untrust zone.

You have successfully configured interfaces in a trust zone and in an untrust zone.

Configuring Security Policies

To configure security policies:

1. From the J-Web Dashboard page, select **Configure>Security>Security Policy** and click **Add**. The Add Policy dialog box appears.
2. In the Policy tab, enter the policy name and set the policy action to **permit**. Then select **Zone** and set the From Zone to **trust** and the To Zone to **untrust**.
3. Configure the source IP address by selecting **any** listed under Available and moving it under Selected.
4. Configure the destination IP address by selecting **any** listed under Available and moving it under Selected.
5. Configure the application by selecting **any** listed under Available and moving it under Selected.
6. Click **OK**.

   A message appears after your configuration changes are validated successfully.
7. Click **OK**.
8. Select **Commit Options>Commit** to apply the configuration changes.

Copyright © 2014, Juniper Networks, Inc.

A message appears after your configuration changes are applied successfully.

9. Click **OK**.

You have successfully configured the security policy.

Related Documentation

- *Performing Initial Software Configuration on the SRX1400 Services Gateway (CLI Procedure)*
- *Performing Initial Software Configuration on the SRX3400 Services Gateway*
- *Performing Initial Software Configuration on the SRX3600 Services Gateway*
- *Initially Configuring the SRX5400 Services Gateway*
- *Initially Configuring the SRX5600 Services Gateway*
- Initially Configuring the SRX5800 Services Gateway on page 110

Copyright © 2014, Juniper Networks, Inc.

Copyright © 2014, Juniper Networks, Inc.

PART 3

SRX5800 Services Gateway Hardware Maintenance, Replacement, and Troubleshooting Procedures

- Maintaining the SRX5800 Services Gateway Hardware Components on page 121
- Troubleshooting the SRX5800 Services Gateway Hardware Components on page 135
- Replacing SRX5800 Services Gateway Hardware Components on page 145

Copyright © 2014, Juniper Networks, Inc.

Copyright © 2014, Juniper Networks, Inc.

CHAPTER 11

Maintaining the SRX5800 Services Gateway Hardware Components

- Tools and Parts Required to Maintain the SRX5800 Services Gateway on page 121
- Routine Maintenance Procedures for the SRX5800 Services Gateway on page 121
- Maintaining the SRX5800 Cooling System Components on page 122
- Maintaining the SRX5800 Services Gateway Host Subsystem and SCBs on page 123
- Maintaining the SRX5800 Packet Forwarding Engine Components on page 125
- Handling and Storing SRX5800 Services Gateway Cards on page 129
- Maintaining SRX5800 Services Gateway Power Supplies on page 133

Tools and Parts Required to Maintain the SRX5800 Services Gateway

To maintain hardware components, you need the following tools and parts:

- ESD grounding wrist strap
- Flat-blade (–) screwdriver
- Phillips (+) screwdriver, number 1
- Phillips (+) screwdriver, number 2

Related Documentation

- Routine Maintenance Procedures for the SRX5800 Services Gateway on page 121

Routine Maintenance Procedures for the SRX5800 Services Gateway

Purpose For optimum services gateway performance, perform preventive maintenance procedures regularly.

Action

- Inspect the installation site for moisture, loose wires or cables, and excessive dust. Make sure that airflow is unobstructed around the device and into the air intake vents.
- Check the status-reporting devices on the craft interface—System alarms and LEDs.
- Inspect the air filter at the bottom front of the services gateway, replacing it every six months for optimum cooling system performance. Do not run the device for more than a few minutes without the air filter in place.

Copyright © 2014, Juniper Networks, Inc.

Related Documentation

- Tools and Parts Required to Maintain the SRX5800 Services Gateway on page 121
- Maintaining the Air Filter on the SRX5800 Services Gateway on page 122
- Maintaining the Fan Trays on the SRX5800 Services Gateway on page 123
- Maintaining the SRX5800 Services Gateway Host Subsystem and SCBs on page 123
- Maintaining Interface Cards and SPCs on the SRX5600 Services Gateway on page 125
- Maintaining MICs and Port Modules on the SRX5800 Services Gateway on page 127
- Maintaining SRX5800 Services Gateway Network Cables on page 128
- Maintaining SRX5800 Services Gateway Power Supplies on page 133

Maintaining the SRX5800 Cooling System Components

- Maintaining the Air Filter on the SRX5800 Services Gateway on page 122
- Maintaining the Fan Trays on the SRX5800 Services Gateway on page 123

Maintaining the Air Filter on the SRX5800 Services Gateway

Purpose For optimum cooling, verify the condition of the air filters.

Action

- Regularly inspect the air filter. A dirty air filter restricts airflow in the unit, impeding the ventilation of the chassis. The filter degrades over time. Periodically replace the filter in use, as well as spares. We recommend that you replace the filter every six months. Discard used filters, do not attempt to clean and reuse them.



CAUTION: **Always keep the air filter in place while the services gateway is operating. Because the fans are very powerful, they could pull small bits of wire or other materials into the services gateway through the unfiltered air intake. This could damage the services gateway components.**

- Use spare filters within one year of manufacture. Check the date of manufacture printed on the filter. Store spare air filters in a dark, cool, and dry place. Storing air filters at higher temperatures, or where they can be exposed to ultraviolet (UV) radiation, hydrocarbon emissions, or vapors from solvents, can significantly reduce their life.

Related Documentation

- Tools and Parts Required to Maintain the SRX5800 Services Gateway on page 121
- Replacing the SRX5800 Services Gateway Air Filter on page 155
- Routine Maintenance Procedures for the SRX5800 Services Gateway on page 121
- Maintaining the Fan Trays on the SRX5800 Services Gateway on page 123
- Maintaining the SRX5800 Services Gateway Host Subsystem and SCBs on page 123
- Maintaining Interface Cards and SPCs on the SRX5600 Services Gateway on page 125

Copyright © 2014, Juniper Networks, Inc.

- Maintaining MICs and Port Modules on the SRX5800 Services Gateway on page 127
- Maintaining SRX5800 Services Gateway Network Cables on page 128
- Maintaining SRX5800 Services Gateway Power Supplies on page 133

Maintaining the Fan Trays on the SRX5800 Services Gateway

Purpose For optimum cooling, verify the condition of the fans.

Action

- Monitor the status of the fans. A fan tray contains multiple fans that work in unison to cool the services gateway components. If one fan fails, the host subsystem adjusts the speed of the remaining fans to maintain proper cooling. A major alarm is triggered when a fan fails, and a minor alarm and major alarm is triggered when a fan tray is removed.
- To display the status of the cooling system, issue the **show chassis environment** command.

```
user@host> show chassis environment
```



NOTE: The fan numbers are stamped into the fan tray sheet metal next to each fan.

Related Documentation

- Tools and Parts Required to Maintain the SRX5800 Services Gateway on page 121
- Routine Maintenance Procedures for the SRX5800 Services Gateway on page 121
- Maintaining the Air Filter on the SRX5800 Services Gateway on page 122
- Maintaining the SRX5800 Services Gateway Host Subsystem and SCBs on page 123
- Maintaining Interface Cards and SPCs on the SRX5600 Services Gateway on page 125
- Maintaining MICs and Port Modules on the SRX5800 Services Gateway on page 127
- Maintaining SRX5800 Services Gateway Network Cables on page 128
- Maintaining SRX5800 Services Gateway Power Supplies on page 133

Maintaining the SRX5800 Services Gateway Host Subsystem and SCBs

Purpose For optimum services gateway performance, verify the condition of the host subsystem and any additional SCBs. The host subsystem comprises an SCB and a Routing Engine installed into a slot in the SCB.

Action On a regular basis:

- Check the LEDs on the craft interface to view information about the status of the Routing Engines.
- Check the LEDs on the SCB faceplate.

Copyright © 2014, Juniper Networks, Inc.

- Check the LEDs on the Routing Engine faceplate.
- To check the status of the Routing Engine, issue the **show chassis routing-engine** command. The output is similar to the following:

```
user@host> show chassis routing-engine

Routing Engine status:
  Slot 0:
    Current state                  Master
    Election priority              Master (default)
    Temperature                 36 degrees C / 96 degrees F
    CPU temperature             33 degrees C / 91 degrees F
    DRAM                      2048 MB
    Memory utilization          12 percent
    CPU utilization:
      User                       1 percent
      Background                 0 percent
      Kernel                     4 percent
      Interrupt                  0 percent
      Idle                      94 percent
    Model                          RE-S-1300
    Serial ID                      1000697084
    Start time                     2008-07-11 08:31:44 PDT
    Uptime                         3 hours, 27 minutes, 27 seconds
    Load averages:                 1 minute   5 minute  15 minute
                                       0.44       0.16       0.06
```

- To check the status of the SCB, issue the **show chassis environment cb** command. The output is similar to the following:

```
user@host> show chassis environment cb

CB 0 status:
  State                      Online Master
  Temperature                40 degrees C / 104 degrees F
  Power 1
    1.2 V                     1208 mV
    1.5 V                     1521 mV
    1.8 V                     1807 mV
    2.5 V                     2507 mV
    3.3 V                     3319 mV
    5.0 V                     5033 mV
    12.0 V                   12142 mV
    1.25 V                    1243 mV
    3.3 V SM3                 3312 mV
    5 V RE                    5059 mV
    12 V RE                  11968 mV
  Power 2
    11.3 V bias PEM          11253 mV
    4.6 V bias MidPlane       4814 mV
    11.3 V bias FPD          11234 mV
    11.3 V bias POE 0        11176 mV
    11.3 V bias POE 1        11292 mV
  Bus Revision               42
  FPGA Revision              1
```

To check the status of a specific SCB, issue the **show chassis environment cb node *slot*** command, for example, **show chassis environment cb node 0**.

For more information about using the CLI, see the CLI Explorer.

Copyright © 2014, Juniper Networks, Inc.

Related Documentation

- Tools and Parts Required to Maintain the SRX5800 Services Gateway on page 121
- SRX5800 Services Gateway Craft Interface Host Subsystem LEDs on page 22
- Routine Maintenance Procedures for the SRX5800 Services Gateway on page 121
- Maintaining the Air Filter on the SRX5800 Services Gateway on page 122
- Maintaining the Fan Trays on the SRX5800 Services Gateway on page 123
- Maintaining Interface Cards and SPCs on the SRX5600 Services Gateway on page 125
- Maintaining MICs and Port Modules on the SRX5800 Services Gateway on page 127
- Maintaining SRX5800 Services Gateway Network Cables on page 128
- Maintaining SRX5800 Services Gateway Power Supplies on page 133

Maintaining the SRX5800 Packet Forwarding Engine Components

- Maintaining Interface Cards and SPCs on the SRX5600 Services Gateway on page 125
- Maintaining MICs and Port Modules on the SRX5800 Services Gateway on page 127
- Maintaining SRX5800 Services Gateway Network Cables on page 128

Maintaining Interface Cards and SPCs on the SRX5600 Services Gateway

Purpose For optimum services gateway performance, verify the condition of the Services Processing Cards (SPCs) and interface cards (IOCs, Flex IOCs and MPCs). The services gateway can have up to 6 SPCs and interface cards mounted horizontally in the card cage at the front of the chassis. To maintain SPCs and interface cards, perform the following procedures regularly.

Action On a regular basis:

- Check the LEDs on the craft interface corresponding to the slot for each SPC and interface card. The green LED labeled **OK** lights steadily when a card is functioning normally.
- Check the **OK/FAIL** LED on the faceplate of each SPC and interface card. If the card detects a failure, it sends an alarm message to the Routing Engine.
- Issue the CLI **show chassis fpc** command to check the status of installed cards. As shown in the sample output, the value *Online* in the column labeled *State* indicates that the card is functioning normally:

```
user@host> show chassis fpc
                    Temp  CPU Utilization (%)   Memory    Utilization (%)
Slot State           (C)  Total  Interrupt      DRAM (MB) Heap     Buffer
  0  Online           41      9          0       1024       15         57
  1  Online           43      5          0       1024       16         57
  2  Online           43     11          0       1024       16         57
  3  Empty
  4  Empty
  5  Online           42      6          0       1024       16         57
```

For more detailed output, add the **detail** option. The following example does not specify a slot number, which is optional:

```
user@host> show chassis fpc detail
Slot 0 information:
  State                                   Online
  Temperature                          41 degrees C / 105 degrees F
  Total CPU DRAM                     1024 MB
  Total RLDRAM                        256 MB
  Total DDR DRAM                     4096 MB
  Start time:                             2007-07-10 12:28:33 PDT
  Uptime:                                 1 hour, 33 minutes, 52 seconds
Slot 1 information:
  State                                   Online
  Temperature                          43 degrees C / 109 degrees F
  Total CPU DRAM                     1024 MB
  Total RLDRAM                        256 MB
  Total DDR DRAM                     4096 MB
  Start time:                             2007-07-10 12:28:38 PDT
  Uptime:                                 1 hour, 33 minutes, 47 seconds
Slot 2 information:
  State                                   Online
  Temperature                          43 degrees C / 109 degrees F
  Total CPU DRAM                     1024 MB
  Total RLDRAM                        256 MB
  Total DDR DRAM                     4096 MB
  Start time:                             2007-07-10 12:28:40 PDT
  Uptime:                                 1 hour, 33 minutes, 45 seconds
Slot 5 information:
  State                                   Online
  Temperature                          42 degrees C / 107 degrees F
  Total CPU DRAM                     1024 MB
  Total RLDRAM                        256 MB
  Total DDR DRAM                     4096 MB
  Start time:                             2007-07-10 12:28:42 PDT
  Uptime:                                 1 hour, 33 minutes, 43 seconds
```

- Issue the CLI **show chassis fpc pic-status** command. The slots are numbered **0** through **5**, bottom to top:

```
user@host> show chassis fpc pic-status

Slot 0   Online       SRX5k DPC 40x 1GE
  PIC 0  Online       10x 1GE RichQ
  PIC 1  Online       10x 1GE RichQ
  PIC 2  Online       10x 1GE RichQ
  PIC 3  Online       10x 1GE RichQ
Slot 1   Online       SRX5k DPC 40x 1GE
  PIC 0  Online       10x 1GE RichQ
  PIC 1  Online       10x 1GE RichQ
  PIC 2  Online       10x 1GE RichQ
  PIC 3  Online       10x 1GE RichQ
Slot 2   Online       SRX5k DPC 40x 1GE
  PIC 0  Online       10x 1GE RichQ
  PIC 1  Online       10x 1GE RichQ
  PIC 2  Online       10x 1GE RichQ
  PIC 3  Online       10x 1GE RichQ
Slot 3   Online       SRX5k SPC
  PIC 0  Offline
  PIC 1  Offline
```


Copyright © 2014, Juniper Networks, Inc.

```
Slot 4   Online       SRX5k SPC
  PIC 0  Offline
  PIC 1  Offline
```

For further description of the output from the command, see *Junos OS System Basics and Services Command Reference* at www.juniper.net/techpubs/.

Related Documentation

- SRX5800 Services Gateway Craft Interface Card OK/Fail LEDs on page 23
- Routine Maintenance Procedures for the SRX5800 Services Gateway on page 121
- Maintaining the Air Filter on the SRX5800 Services Gateway on page 122
- Maintaining the Fan Trays on the SRX5800 Services Gateway on page 123
- Maintaining the SRX5800 Services Gateway Host Subsystem and SCBs on page 123
- Maintaining MICs and Port Modules on the SRX5800 Services Gateway on page 127
- Maintaining SRX5800 Services Gateway Network Cables on page 128
- Maintaining SRX5800 Services Gateway Power Supplies on page 133

Maintaining MICs and Port Modules on the SRX5800 Services Gateway

Purpose For optimum services gateway performance, verify the condition of the MICs installed in MPCs, and port modules installed in Flex IOCs.

Action On a regular basis:

- Check the LEDs on MIC and port modules faceplates. The meaning of the LED states differs for various port modules. If the Flex IOC that houses the port modules detects a port modules failure, the Flex IOC generates an alarm message to be sent to the Routing Engine.
- Issue the CLI **show chassis fpc pic-status** command. The port module and MIC slots in an FPC are numbered from **0** through **1**, bottom to top:

```
user@host> show chassis fpc pic-status
Slot 0   Online       SRX5k SPC
  PIC 0  Online       SPU Cp-Flow
  PIC 1  Online       SPU Flow
Slot 3   Online       SRX5k DPC 4X 10GE
  PIC 0  Online       1x 10GE(LAN/WAN) RichQ
  PIC 1  Online       1x 10GE(LAN/WAN) RichQ
  PIC 2  Online       1x 10GE(LAN/WAN) RichQ
  PIC 3  Online       1x 10GE(LAN/WAN) RichQ
Slot 5   Online       SRX5k FIOC
  PIC 0  Online       16x 1GE TX
  PIC 1  Online       4x 10GE XFP
```

For further description of the output from the command, see *Junos OS System Basics and Services Command Reference* at www.juniper.net/techpubs/.

Related Documentation

- Routine Maintenance Procedures for the SRX5800 Services Gateway on page 121

Copyright © 2014, Juniper Networks, Inc.

- Maintaining the Air Filter on the SRX5800 Services Gateway on page 122
- Maintaining the Fan Trays on the SRX5800 Services Gateway on page 123
- Maintaining the SRX5800 Services Gateway Host Subsystem and SCBs on page 123
- Maintaining Interface Cards and SPCs on the SRX5600 Services Gateway on page 125
- Maintaining SRX5800 Services Gateway Network Cables on page 128
- Maintaining SRX5800 Services Gateway Power Supplies on page 133

Maintaining SRX5800 Services Gateway Network Cables

Purpose For optimum services gateway performance, verify the condition of the network cables.

Action On a regular basis:

- Use the cable manager to support cables and prevent cables from dislodging or developing stress points.

Figure 53: Cable Manager

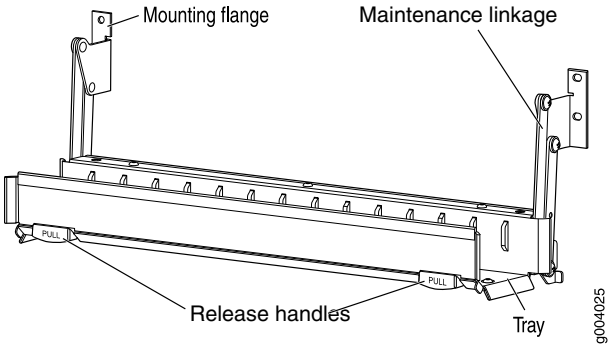

- Place excess cable out of the way in the cable manager. Do not allow fastened loops of cable to dangle from the connector or cable manager, because this stresses the cable at the fastening point. Putting fasteners on the loops helps to maintain their shape.
- Keep the cable connections clean and free of dust and other particles, which can cause drops in the received power level. Always inspect cables and clean them if necessary before connecting an interface.
- Label both ends of the cables to identify them.

The following guidelines apply specifically to fiber-optic cables:

- When you unplug a fiber-optic cable, always place a rubber safety plug over the transceiver on the IOC or port module faceplate and on the end of the cable.
- Anchor fiber-optic cables to avoid stress on the connectors. Be sure to secure fiber-optic cables so that they do not support their own weight as they hang to the floor. Never let fiber-optic cable hang free from the connector.

Copyright © 2014, Juniper Networks, Inc.

- Avoid bending fiber-optic cable beyond its bend radius. An arc smaller than a few inches can damage the cable and cause problems that are difficult to diagnose.
- Frequent plugging and unplugging of fiber-optic cable into and out of optical instruments can cause damage to the instruments that is expensive to repair. Instead, attach a short fiber extension to the optical equipment. Any wear and tear due to frequent plugging and unplugging is then absorbed by the short fiber extension, which is easy and inexpensive to replace.
- Keep fiber-optic cable connections clean. Small microdeposits of oil and dust in the canal of the transceiver or cable connector could cause loss of light, reducing signal power and possibly causing intermittent problems with the optical connection.

  To clean the transceivers, use an appropriate fiber-cleaning device, such as RIFOCS Fiber Optic Adaptor Cleaning Wands (part number 946). Follow the directions for the cleaning kit you use.

  After you clean an optical transceiver, make sure that the connector tip of the fiber-optic cable is clean. Use only an approved alcohol-free fiber-optic cable cleaning kit, such as the Opptex Cletop-S Fiber Cleaner. Follow the directions for the cleaning kit you use.

Related Documentation

- Routine Maintenance Procedures for the SRX5800 Services Gateway on page 121
- Maintaining the Air Filter on the SRX5800 Services Gateway on page 122
- Maintaining the Fan Trays on the SRX5800 Services Gateway on page 123
- Maintaining the SRX5800 Services Gateway Host Subsystem and SCBs on page 123
- Maintaining Interface Cards and SPCs on the SRX5600 Services Gateway on page 125
- Maintaining MICs and Port Modules on the SRX5800 Services Gateway on page 127
- Maintaining SRX5800 Services Gateway Power Supplies on page 133

Handling and Storing SRX5800 Services Gateway Cards

- SRX5800 Services Gateway Card Terminology on page 129
- Holding an SRX5800 Services Gateway Card on page 130
- Storing an SRX5800 Services Gateway Card on page 132

SRX5800 Services Gateway Card Terminology

Regardless of orientation, this information uses the same terms for all four edges of the card (see Figure 54 on page 130):

- Faceplate—Edge of the card that has connectors to which you connect cables or sockets in which you insert SFP or XFP transceivers.
- Connector edge—Edge opposite the faceplate; this edge has the connectors that attach to the midplane.

Copyright © 2014, Juniper Networks, Inc.

- Top edge—Edge at the top of the card when it is vertical.
- Bottom edge—Edge at the bottom of the card when it is vertical.

NOTE: This terminology applies to SPCs, IOCs, MPCs, and SCBs in addition to Routing Engines and port modules.

Figure 54: Card Edges

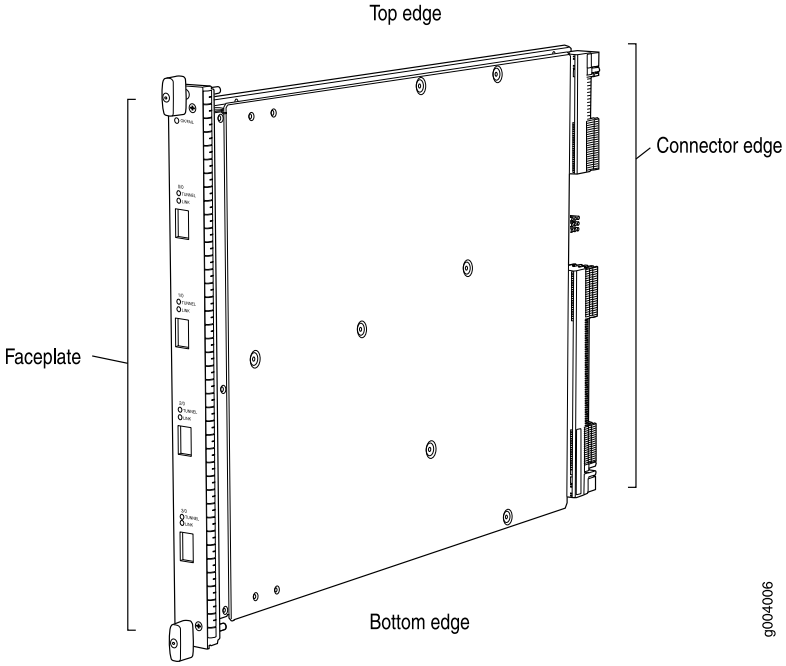

Related Documentation

- Holding an SRX5800 Services Gateway Card on page 130
- Storing an SRX5800 Services Gateway Card on page 132

Holding an SRX5800 Services Gateway Card

When carrying a card, you can hold it either vertically or horizontally.

NOTE: A card weighs up to 18.3 lb (8.3 kg). Be prepared to accept the full weight of the card as you lift it.

To hold a card vertically:

1. Orient the card so that the faceplate faces you. To verify orientation, confirm that the text on the card is right-side up and the EMI strip is on the right-hand side.
2. Place one hand around the card faceplate about a quarter of the way down from the top edge. To avoid deforming the EMI shielding strip, do not press hard on it.

Copyright © 2014, Juniper Networks, Inc.

3. Place your other hand at the bottom edge of the card.

If the card is horizontal before you grasp it, place your left hand around the faceplate and your right hand along the bottom edge.

To hold a card horizontally:

1. Orient the card so that the faceplate faces you.
2. Grasp the top edge with your left hand and the bottom edge with your right hand.

You can rest the faceplate of the card against your body as you carry it.

As you carry the card, do not bump it against anything. Card components are fragile.

Never hold or grasp the card anywhere except those places that this topic indicates are appropriate. In particular, never grasp the connector edge, especially at the power connector in the corner where the connector and bottom edges meet.

Figure 55: Do Not Grasp the Connector Edge

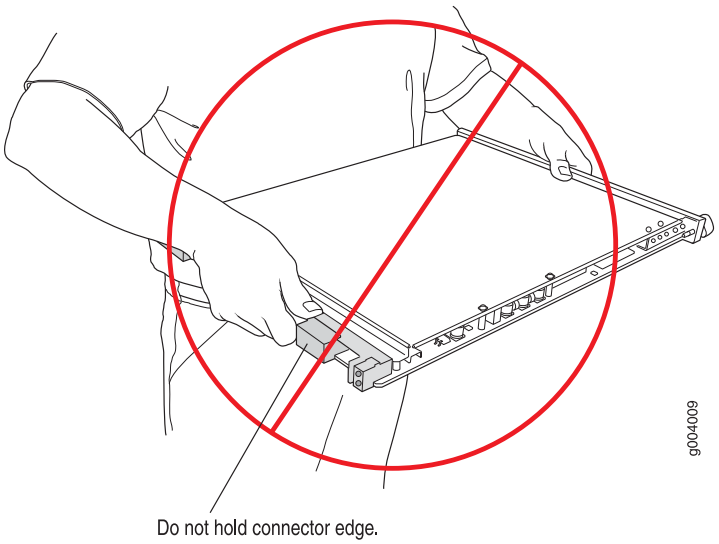

Never carry the card by the faceplate with only one hand.

Do not rest any edge of a card directly against a hard surface (see Figure 56 on page 132).

Do not stack cards.

Copyright © 2014, Juniper Networks, Inc.

Figure 56: Do Not Rest the Card on an Edge

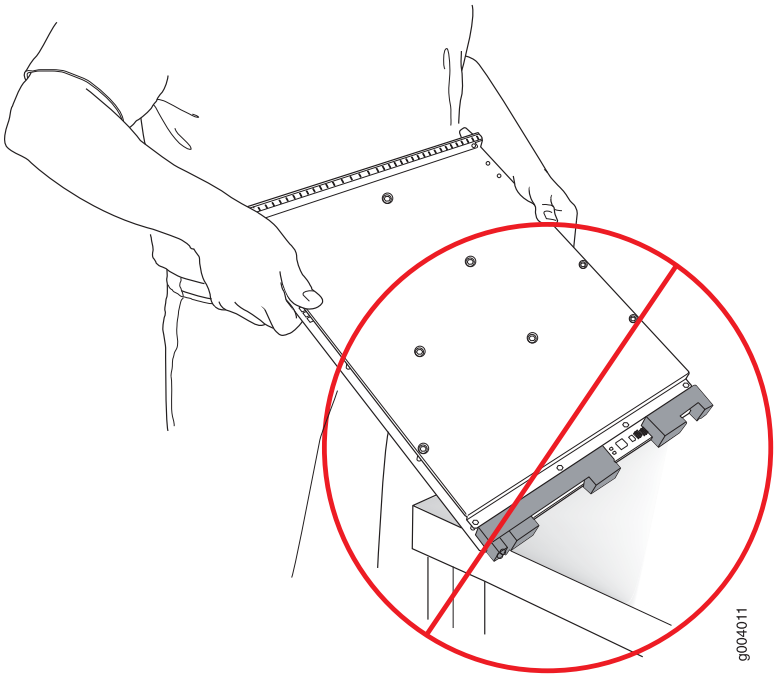

Do not rest connectors on any surface.

If you must rest the card temporarily on an edge while changing its orientation between vertical and horizontal, use your hand as a cushion between the edge and the surface.

Related Documentation

- SRX5800 Services Gateway Card Terminology on page 129
- Storing an SRX5800 Services Gateway Card on page 132

Storing an SRX5800 Services Gateway Card

You must store a card as follows:

- In the services gateway chassis
- In the container in which a spare card is shipped
- Horizontally and sheet metal side down

When you store a card on a horizontal surface or in the shipping container, always place it inside an antistatic bag. Because the card is heavy, and because antistatic bags are fragile, inserting the card into the bag is easier with two people. To do this, one person holds the card in the horizontal position with the faceplate facing the body, and the other person slides the opening of the bag over the card connector edge.

If you must insert the card into a bag by yourself, first lay the card horizontally on a flat, stable surface, sheet metal side down. Orient the card with the faceplate facing you. Carefully insert the card connector edge into the opening of the bag, and pull the bag toward you to cover the card.

Copyright © 2014, Juniper Networks, Inc.

Never stack a card under or on top of any other component.

Related Documentation

- SRX5800 Services Gateway Card Terminology on page 129
- Holding an SRX5800 Services Gateway Card on page 130

Maintaining SRX5800 Services Gateway Power Supplies

Purpose For optimum services gateway performance, verify the condition of the power supplies.

Action On a regular basis:

- To check the status of the power supplies, issue the **show chassis environment pem** command. The output is similar to the following:

```
user@host> show chassis environment pem
PEM 0 status:
  State                     Online
  Temperature               OK
  AC Input:                 OK
  DC Output             Voltage   Current       Power    Load
                          50        6             300      17
PEM 1 status:
  State                     Online
  Temperature               OK
  AC Input:                 OK
  DC Output             Voltage   Current       Power    Load
                          50        3             150      8
```

- Make sure that the power and grounding cables are arranged so that they do not obstruct access to other services gateway components.
- Routinely check the status LEDs on the power supply faceplates and the craft interface to determine if the power supplies are functioning normally.
- Check the red and yellow alarm LEDs on the craft interface. Power supply failure or removal triggers an alarm that causes one or both of the LEDs to light. You can display the associated error messages by issuing the following command:

```
user@host> show chassis alarms
```

- Periodically inspect the site to ensure that the grounding and power cables connected to the device are securely in place and that there is no moisture accumulating near the device.

Related Documentation

- SRX5800 Services Gateway Craft Interface Power Supply LEDs on page 23
- SRX5800 Services Gateway Standard-Capacity AC Power Supply LEDs on page 35
- SRX5800 Services Gateway Standard-Capacity DC Power Supply LEDs on page 40
- Troubleshooting the SRX5800 Services Gateway with the Junos OS CLI on page 135
- Routine Maintenance Procedures for the SRX5800 Services Gateway on page 121
- Maintaining SRX5800 Services Gateway Network Cables on page 128

Copyright © 2014, Juniper Networks, Inc.

Copyright © 2014, Juniper Networks, Inc.

CHAPTER 12

Troubleshooting the SRX5800 Services Gateway Hardware Components

- Troubleshooting Resources for the SRX5800 Services Gateway on page 135
- Troubleshooting the SRX5800 Services Gateway Cooling System on page 138
- Troubleshooting SRX5800 Services Gateway Interface Cards on page 139
- Troubleshooting SRX5800 Services Gateway MICs and Port Modules on page 140
- Troubleshooting SRX5800 Services Gateway SPCs on page 141
- Troubleshooting the SRX5800 Services Gateway Power System on page 142

Troubleshooting Resources for the SRX5800 Services Gateway

- Troubleshooting the SRX5800 Services Gateway with the Junos OS CLI on page 135
- Troubleshooting the SRX5800 Services Gateway with Chassis and Interface Alarm Messages on page 136
- Troubleshooting the SRX5800 Services Gateway with Alarm Relay Contacts on page 136
- Troubleshooting the SRX5800 Services Gateway with the Craft Interface LEDs on page 136
- Troubleshooting the SRX5800 Services Gateway with the Component LEDs on page 137
- Juniper Networks Technical Assistance Center on page 138

Troubleshooting the SRX5800 Services Gateway with the Junos OS CLI

The Junos OS command-line interface (CLI) is the primary tool for controlling and troubleshooting services gateway hardware, Junos OS, routing protocols, and network connectivity. CLI commands display information from routing tables, information specific to routing protocols, and information about network connectivity derived from the ping and traceroute utilities.

You enter CLI commands on one or more external management devices connected to ports on the Routing Engine.

For information about using the CLI to troubleshoot Junos OS, see the appropriate Junos OS configuration guide.

Copyright © 2014, Juniper Networks, Inc.

Related Documentation

- Troubleshooting the SRX5800 Services Gateway with Chassis and Interface Alarm Messages on page 136
- Troubleshooting the SRX5800 Services Gateway with Alarm Relay Contacts on page 136
- Troubleshooting the SRX5800 Services Gateway with the Craft Interface LEDs on page 136
- Troubleshooting the SRX5800 Services Gateway with the Component LEDs on page 137

Troubleshooting the SRX5800 Services Gateway with Chassis and Interface Alarm Messages

When the Routing Engine detects an alarm condition, it lights the major or minor alarm LED on the craft interface as appropriate. To view a more detailed description of the alarm cause, issue the **show chassis alarms** CLI command:

```
user@host> show chassis alarms
```

There are two classes of alarm messages:

- Chassis alarms—Indicate a problem with a chassis component such as the cooling system or power supplies.
- Interface alarms—Indicate a problem with a specific network interface.

Related Documentation

- Troubleshooting the SRX5800 Services Gateway with the Junos OS CLI on page 135
- Troubleshooting the SRX5800 Services Gateway with Alarm Relay Contacts on page 136
- Troubleshooting the SRX5800 Services Gateway with the Craft Interface LEDs on page 136
- Troubleshooting the SRX5800 Services Gateway with the Component LEDs on page 137

Troubleshooting the SRX5800 Services Gateway with Alarm Relay Contacts

The craft interface has two alarm relay contacts for connecting the services gateway to external alarm devices. Whenever a system condition triggers either the major or minor alarm on the craft interface, the alarm relay contacts are also activated. The alarm relay contacts are located on the upper right of the craft interface.

Related Documentation

- Troubleshooting the SRX5800 Services Gateway with the Junos OS CLI on page 135
- Troubleshooting the SRX5800 Services Gateway with Chassis and Interface Alarm Messages on page 136
- Troubleshooting the SRX5800 Services Gateway with the Craft Interface LEDs on page 136
- Troubleshooting the SRX5800 Services Gateway with the Component LEDs on page 137

Troubleshooting the SRX5800 Services Gateway with the Craft Interface LEDs

The craft interface is the panel on the front of the services gateway located above the card cage that contains LEDs and buttons that allow you to troubleshoot the device.

Copyright © 2014, Juniper Networks, Inc.

LEDs on the craft interface include the following:

- Alarm LEDs—One large red circular LED and one large yellow triangular LED, located on the upper right of the craft interface, indicate two levels of alarm conditions. The circular red LED lights to indicate a critical condition that can result in a system shutdown. The triangular yellow LED lights to indicate a less severe condition that requires monitoring or maintenance. Both LEDs can be lit simultaneously. A condition that causes an alarm LED to light also activates the corresponding alarm relay contact on the craft interface.
- Host subsystem LEDs—Three LEDs, **MASTER**, **ONLINE**, and **OFFLINE**, indicate the status of the host subsystem. A green **MASTER** LED indicates that the host is functioning as master. The **ONLINE** LED indicates the host is online. The **OFFLINE** LED indicates the host is offline. The host subsystem LEDs are located on the left of the craft interface and are labeled **RE0** and **RE1**.
- Power supply LEDs—Two LEDs (**PEM**) indicate the status of each power supply. Green indicates that the power supply is functioning normally. Red indicates that the power supply is not functioning normally. The power supply LEDs are located in the center of the craft interface, and are labeled **0** through **3**.
- Card OK/Fail LEDs—Two LEDs, **OK** and **FAIL**, indicate the status of the card in each slot in the card cage. Green indicates OK and red indicates a failure. The card OK/Fail LEDs are located along the bottom of the craft interface, and are labeled **0** through **5**, **2/6**, and **7** through **11**.
- SCB LEDs—Two LEDs, **OK** and **FAIL**, indicate the status of each SCB. Green indicates OK and red indicates a failure. The SCB LEDs are located in the center of the craft interface along the bottom, and are labeled **0** and **1**.
- Fan LEDs—Two LEDs indicate the status of each fan tray. Green indicates OK and red indicates a fan failure. The fan LEDs are located on the upper left of the craft interface.

Related Documentation

- SRX5800 Services Gateway Craft Interface Host Subsystem LEDs on page 22
- Troubleshooting the SRX5800 Services Gateway with the Junos OS CLI on page 135
- Troubleshooting the SRX5800 Services Gateway with Chassis and Interface Alarm Messages on page 136
- Troubleshooting the SRX5800 Services Gateway with Alarm Relay Contacts on page 136
- Troubleshooting the SRX5800 Services Gateway with the Component LEDs on page 137

Troubleshooting the SRX5800 Services Gateway with the Component LEDs

The following LEDs are located on various services gateway components and display the status of those components:

- Card LED—One LED labeled **OK/FAIL** on each card in the card cage indicates the card's status.
- MIC and port module LED—One LED labeled **OK/FAIL** on each MIC installed in an MPC, and each port module installed in a Flex IOC indicates the MIC or port module's status.

Copyright © 2014, Juniper Networks, Inc.

- SCB LEDs—Three LEDs, labeled **FABRIC ACTIVE**, **FABRIC ONLY**, and **OK/FAIL** , on each SCB faceplate indicate the status of the SCB. If no LEDs are lit, the master Routing Engine might still be booting, or the SCB is not receiving power.
- Routing Engine LEDs—Four LEDs, labeled **MASTER**, **HDD**, **ONLINE**, and **FAIL** on the Routing Engine faceplate indicate the status of the Routing Engine and hard disk drive.
- Power supply LEDs—Three or four LEDs on each power supply faceplate indicate the status of that power supply.

Related Documentation

- Troubleshooting the SRX5800 Services Gateway with the Junos OS CLI on page 135
- Troubleshooting the SRX5800 Services Gateway with Chassis and Interface Alarm Messages on page 136
- Troubleshooting the SRX5800 Services Gateway with Alarm Relay Contacts on page 136
- Troubleshooting the SRX5800 Services Gateway with the Craft Interface LEDs on page 136

Juniper Networks Technical Assistance Center

If you need assistance while troubleshooting a services gateway, open a support case using the Case Manager link at: http://www.juniper.net/support/, or call 1-888-314-JTAC (within the United States) or 1-408-745-9500.

Related Documentation

- Troubleshooting the SRX5800 Services Gateway with the Junos OS CLI on page 135
- Troubleshooting the SRX5800 Services Gateway with Chassis and Interface Alarm Messages on page 136
- Troubleshooting the SRX5800 Services Gateway with Alarm Relay Contacts on page 136
- Troubleshooting the SRX5800 Services Gateway with the Craft Interface LEDs on page 136
- Troubleshooting the SRX5800 Services Gateway with the Component LEDs on page 137

Troubleshooting the SRX5800 Services Gateway Cooling System

Problem **Description:** The fans in a fan tray are not functioning normally.

Solution Follow these guidelines to troubleshoot the fans:

- Check the fan LEDs and alarm LEDs on the craft interface.
- If the major alarm LED on the craft interface lights, use the CLI to get information about the source of an alarm condition: **user@host> show chassis alarms**.

  If the CLI output lists only one fan failure, and the other fans are functioning normally, the fan is most likely faulty and you must replace the fan tray.
- Place your hand near the exhaust vents at the side of the chassis to determine whether the fans are pushing air out of the chassis.

Copyright © 2014, Juniper Networks, Inc.

- If the fan tray is removed, a minor alarm and a major alarm occur.
- The following conditions automatically cause the fans to run at full speed and also trigger the indicated alarm:
  - A fan fails (major alarm).
  - The services gateway temperature exceeds the “temperature warm” threshold (minor alarm).
  - The temperature of the services gateway exceeds the maximum (“temperature hot”) threshold (major alarm and automatic shutdown of the power supplies).

Related Documentation

- Troubleshooting the SRX5800 Services Gateway with the Junos OS CLI on page 135
- Troubleshooting the SRX5800 Services Gateway with the Craft Interface LEDs on page 136
- Troubleshooting the SRX5800 Services Gateway with Alarm Relay Contacts on page 136

Troubleshooting SRX5800 Services Gateway Interface Cards

Problem **Description:** The interface cards (IOCs, Flex IOCs, or MPCs) are not functioning normally.

Solution

- Monitor the green LED labeled **OK** on the craft interface corresponding to the slot as soon as an interface card is seated in an operating services gateway.

  The Routing Engine downloads the interface card’s software to it under two conditions: the interface card is present when the Routing Engine boots Junos OS, and the interface card is installed and requested online through the CLI or push button on the front panel. The interface card then runs diagnostics, during which the **OK** LED blinks. When the interface card is online and functioning normally, the **OK** LED lights green steadily.
- Make sure the interface card is properly seated in the midplane. Check that each ejector handle has been turned clockwise and is tight.
- Check the **OK/FAIL** LED on the interface card and **OK** and **FAIL** LEDs for the slot on the craft interface. When the interface card is online and functioning normally, the **OK** LED lights green steadily.
- Issue the CLI **show chassis fpc** command to check the status of installed interface cards. As shown in the sample output, the value *Online* in the column labeled *State* indicates that the interface card is functioning normally:

```
user@host> show chassis fpc
                    Temp  CPU Utilization (%)   Memory    Utilization (%)
Slot State           (C)  Total  Interrupt      DRAM (MB) Heap     Buffer
  0  Online           41      9          0       1024       15         57
  1  Online           43      5          0       1024       16         57
  2  Online           43     11          0       1024       16         57
  3  Empty
  4  Empty
  5  Online           42      6          0       1024       16         57
```

Copyright © 2014, Juniper Networks, Inc.

For more detailed output, add the **detail** option. The following example does not specify a slot number, which is optional:

```
user@host> show chassis fpc detail
Slot 0 information:
  State                                   Online
  Temperature                          41 degrees C / 105 degrees F
  Total CPU DRAM                     1024 MB
  Total RLDRAM                        256 MB
  Total DDR DRAM                     4096 MB
  Start time:                             2007-07-10 12:28:33 PDT
  Uptime:                                 1 hour, 33 minutes, 52 seconds
Slot 1 information:
  State                                   Online
  Temperature                          43 degrees C / 109 degrees F
  Total CPU DRAM                     1024 MB
  Total RLDRAM                        256 MB
  Total DDR DRAM                     4096 MB
  Start time:                             2007-07-10 12:28:38 PDT
  Uptime:                                 1 hour, 33 minutes, 47 seconds
Slot 2 information:
  State                                   Online
  Temperature                          43 degrees C / 109 degrees F
  Total CPU DRAM                     1024 MB
  Total RLDRAM                        256 MB
  Total DDR DRAM                     4096 MB
  Start time:                             2007-07-10 12:28:40 PDT
  Uptime:                                 1 hour, 33 minutes, 45 seconds
Slot 5 information:
  State                                   Online
  Temperature                          42 degrees C / 107 degrees F
  Total CPU DRAM                     1024 MB
  Total RLDRAM                        256 MB
  Total DDR DRAM                     4096 MB
  Start time:                             2007-07-10 12:28:42 PDT
  Uptime:                                 1 hour, 33 minutes, 43 seconds
```

For further description of the output from the command, see *Junos OS System Basics and Services Command Reference* at www.juniper.net/techpubs/.

Related Documentation

- Troubleshooting the SRX5800 Services Gateway with the Junos OS CLI on page 135
- Troubleshooting the SRX5800 Services Gateway with the Craft Interface LEDs on page 136
- Troubleshooting the SRX5800 Services Gateway with the Component LEDs on page 137

Troubleshooting SRX5800 Services Gateway MICs and Port Modules

Problem **Description:** The MICs or port modules are not functioning normally.

Solution

- Check the status of each port on a port module by looking at the LED located on the port module faceplate.
- Check the status of a port module by issuing the **show chassis fpc pic-status** CLI command. The port module slots in the Flex IOC are numbered from **0** through **1**:

Copyright © 2014, Juniper Networks, Inc.

```
user@host> show chassis fpc pic-status
Slot 0   Online       SRX5k SPC
  PIC 0  Online       SPU Cp-Flow
  PIC 1  Online       SPU Flow
Slot 3   Online       SRX5k DPC 4X 10GE
  PIC 0  Online       1x 10GE(LAN/WAN) RichQ
  PIC 1  Online       1x 10GE(LAN/WAN) RichQ
  PIC 2  Online       1x 10GE(LAN/WAN) RichQ
  PIC 3  Online       1x 10GE(LAN/WAN) RichQ
Slot 5   Online       SRX5k FIOC
  PIC 0  Online       16x 1GE TX
  PIC 1  Online       4x 10GE XFP
```

For further description of the output from the command, see *Junos OS System Basics and Services Command Reference* at www.juniper.net/techpubs/.

Related Documentation

- Troubleshooting the SRX5800 Services Gateway with the Junos OS CLI on page 135
- Troubleshooting the SRX5800 Services Gateway with the Craft Interface LEDs on page 136
- Troubleshooting the SRX5800 Services Gateway with the Component LEDs on page 137

Troubleshooting SRX5800 Services Gateway SPCs

Problem **Description:** A Services Processing Card (SPC) is not functioning normally.

Solution

- Make sure the SPC is properly seated in the midplane. Check that each ejector handle has been turned clockwise and is tight.
- Issue the CLI **show chassis fpc** command to check the status of installed SPCs. As shown in the sample output, the value *Online* in the column labeled *State* indicates that the SPC is functioning normally:

```
user@host> show chassis fpc
Slot State            (C)  Total  Interrupt      DRAM (MB) Heap     Buffer
  0  Online            35      4          0       1024       13         25
  1  Online            47      3          0       1024       13         25
  2  Online            37      8          0       2048       18         14
```

```
user@host> request chassis fpc slot 2 offline
node0:
--------------------------------------------------------------------------
Offline initiated, use "show chassis fpc" to verify

{primary:node0}
```

```
user@host> show chassis fpc
node0:
--------------------------------------------------------------------------
                     Temp  CPU Utilization (%)   Memory    Utilization (%)
Slot State            (C)  Total  Interrupt      DRAM (MB) Heap     Buffer
  0  Online            35      7          0       1024       13         25
  1  Online            46      4          0       1024       13         25
  2  Offline         ---Offlined by cli command---

After pushing MPC online button:
```

```
user@host> show chassis fpc
                    Temp  CPU Utilization (%)   Memory    Utilization (%)
Slot State           (C)  Total  Interrupt      DRAM (MB) Heap     Buffer
  0  Online           34      5          0       1024       13         25
  1  Online           46      3          0       1024       13         25
  2  Offline         ---Offlined by button press---
```

For more detailed output, add the **detail** option. The following example does not specify a slot number, which is optional:

```
user@host> show chassis fpc detail
Slot 0 information:
  State                                 Online
  Temperature                             35
  Total CPU DRAM                        1024 MB
  Total RLDRAM                           259 MB
  Total DDR DRAM                        4864 MB
  Start time:                                2013-12-10 02:58:16 PST
  Uptime:                                  1 day, 11 hours, 59 minutes, 15 seconds

  Max Power Consumption                  585 Watts
Slot 1 information:
  State                                 Online
  Temperature                             47
  Total CPU DRAM                        1024 MB
  Total RLDRAM                           259 MB
  Total DDR DRAM                        4864 MB
  Start time:                                2013-12-10 02:55:30 PST
  Uptime:                                    1 day, 12 hours, 2 minutes, 1 second
  Max Power Consumption                  585 Watts
Slot 2 information:
  State                                 Online
  Temperature                             37
  Total CPU DRAM                        2048 MB
  Total RLDRAM                          1036 MB
  Total DDR DRAM                        6656 MB
  Start time:                                2013-12-10 02:58:07 PST
  Uptime:                                  1 day, 11 hours, 59 minutes, 24 seconds

  Max Power Consumption                  570 Watts
```

For further description of the output from the command, see *Junos OS System Basics and Services Command Reference* at www.juniper.net/techpubs/.

Related Documentation

- Troubleshooting the SRX5800 Services Gateway with the Junos OS CLI on page 135
- Troubleshooting the SRX5800 Services Gateway with the Craft Interface LEDs on page 136
- Troubleshooting the SRX5800 Services Gateway with the Component LEDs on page 137

Troubleshooting the SRX5800 Services Gateway Power System

Problem **Description:** The power system is not functioning normally.

Solution

- Check the LEDs on each power supply faceplate.

Copyright © 2014, Juniper Networks, Inc.

  - If an AC power supply is correctly installed and functioning normally, the **AC OK** and **DC OK** LEDs light steadily, and the **PS FAIL** LED is not lit.
  - If a DC power supply is correctly installed and functioning normally, the **PWR OK**, **BREAKER ON**, and **INPUT OK** LEDs light steadily.

- Issue the CLI **show chassis environment pem** command to check the status of installed power supplies. As shown in the sample output, the value *Online* in the rows labeled *State* indicates that each of the power supplies is functioning normally:

```
user@host> show chassis environment pem
PEM 0 status:
  State                    Online
  Temperature              OK
  AC Input:                OK
  DC Output            Voltage   Current       Power    Load
                         50        6             300      17
PEM 1 status:
  State                    Online
  Temperature              OK
  AC Input:                OK
  DC Output            Voltage   Current       Power    Load
                         50        3             150      8
```

If a power supply is not functioning normally, perform the following steps to diagnose and correct the problem:

- If a major alarm condition occurs, issue the **show chassis alarms** command to determine the source of the problem.
- If all power supplies have failed, the system temperature might have exceeded the threshold, causing the system to shut down.



NOTE: If the system temperature exceeds the threshold, Junos OS shuts down all power supplies so that no status is displayed.

Junos OS also can shut down one of the power supplies for other reasons. In this case, the remaining power supplies provide power to the services gateway, and you can still view the system status through the CLI or display.

- Check that the AC input switch (—) or DC circuit breaker (|) is in the on position and that the power supply is receiving power.
- Verify that the source circuit breaker has the proper current rating. Each power supply must be connected to a separate source circuit breaker.
- Verify that the AC power cord or DC power cables from the power source to the services gateway are not damaged. If the insulation is cracked or broken, immediately replace the cord or cable.
- Connect the power supply to a different power source with a new power cord or power cables. If the power supply status LEDs indicate that the power supply is not operating normally, the power supply is the source of the problem. Replace the power supply with a spare.

Copyright © 2014, Juniper Networks, Inc.

Related Documentation

- Troubleshooting the SRX5800 Services Gateway with the Junos OS CLI on page 135
- Troubleshooting the SRX5800 Services Gateway with the Craft Interface LEDs on page 136
- Troubleshooting the SRX5800 Services Gateway with the Component LEDs on page 137

Copyright © 2014, Juniper Networks, Inc.

CHAPTER 13

Replacing SRX5800 Services Gateway Hardware Components

- SRX5800 Services Gateway Field-Replaceable Units on page 146
- Tools and Parts Required to Replace SRX5800 Services Gateway Hardware Components on page 146
- Replacing the SRX5800 Services Gateway Craft Interface on page 148
- Replacing an SRX5800 Services Gateway Fan Tray on page 150
- Replacing the SRX5800 Services Gateway Air Filter on page 155
- Replacing SRX5800 Services Gateway Host Subsystem Components on page 157
- Replacing Connections to SRX5800 Services Gateway Routing Engine Interface Ports on page 167
- Replacing SRX5800 Services Gateway IOCs on page 168
- Replacing SRX5800 Services Gateway Flex IOCs on page 173
- Replacing SRX5800 Services Gateway Port Modules on page 177
- Replacing SRX5800 Services Gateway MPCs on page 181
- Replacing SRX5800 Services Gateway MICs on page 185
- Installing MPCs and MICs in an Operating SRX5800 Services Gateway Chassis Cluster on page 190
- Replacing an SRX5800 Services Gateway Network Interface Cable on page 193
- Replacing SRX5800 Services Gateway SPCs on page 196
- Replacing SPCs in an Operating SRX5800 Services Gateway Chassis Cluster on page 203
- Replacing SRX5800 Services Gateway XFP and SFP Transceivers on page 206
- Upgrading an SRX5800 Services Gateway from Standard-Capacity to High-Capacity Power Supplies on page 208
- Replacing an SRX5800 Services Gateway AC Power Supply on page 211
- Replacing an SRX5800 Services Gateway DC Power Supply on page 216
- Replacing an SRX5800 Services Gateway AC Power Supply Cord on page 224
- Replacing an SRX5800 Services Gateway DC Power Supply Cable on page 226
- Replacing the SRX5800 Services Gateway Cable Manager on page 229

Copyright © 2014, Juniper Networks, Inc.

SRX5800 Services Gateway Field-Replaceable Units

Field-replaceable units (FRUs) are services gateway components that can be replaced at the customer site. The device uses the following types of FRUs:

- Hot-removable and hot-insertable FRUs—You can remove and replace these components without powering off the device or disrupting the routing functions.
- Hot-pluggable FRUs—You can remove and replace these components without powering off the device, but the routing functions of the system are interrupted when the component is removed.
- Cold-swap-only FRUs—You must power off the device in order to remove, replace, or add these components.

Table 26 on page 146 lists the FRUs for the services gateway.

Table 26: Field-Replaceable Units

Hot-Removable and Hot-Insertable FRUs	Hot-Pluggable FRUs	Cold-Swap-Only FRUs
Air filter	Port modules	Flex IOCs
Fan tray		IOCs
Craft interface		Routing Engine
AC and DC power supplies (if redundant)		SCBs
SFP and XFP transceivers		SPCs
		MPCs

Related Documentation

- Tools and Parts Required to Replace SRX5800 Services Gateway Hardware Components on page 146

Tools and Parts Required to Replace SRX5800 Services Gateway Hardware Components

To replace hardware components, you must have the tools listed in Table 27 on page 146.

Table 27: Tools and Parts Required

Tool or part	Components
7/16-in. nut driver or pliers	Cables and connectors
	DC power supply

Copyright © 2014, Juniper Networks, Inc.

Table 27: Tools and Parts Required *(continued)*

Tool or part	Components
Blank panels (if component is not reinstalled)	SCB IOC SPC Power supply Routing Engine
Electrostatic bag or antistatic mat	Craft Interface SCB IOC SPC Routing Engine SFP and XFP Transceivers
Electrostatic discharge (ESD) grounding wrist strap	All
Flat-blade (–) screwdriver	Cables and connectors IOC
Phillips (+) screwdrivers, numbers 1 and 2	Air filter Routing Engine Craft interface SCB Cables and connectors Fan tray
Rubber safety cap	IOC SPC SFP and XFP Transceivers
Wire cutters	Cables and connectors DC power supply

Related Documentation

- SRX5800 Services Gateway Field-Replaceable Units on page 146

Copyright © 2014, Juniper Networks, Inc.

Replacing the SRX5800 Services Gateway Craft Interface

To replace the craft interface, perform the following procedures in sequence:

1. Disconnecting the Alarm Relay Wires from the SRX5800 Services Gateway Craft Interface on page 148
2. Removing the SRX5800 Services Gateway Craft Interface on page 148
3. Installing the SRX5800 Services Gateway Craft Interface on page 149
4. Connecting the Alarm Relay Wires to the SRX5800 Services Gateway Craft Interface on page 150

Disconnecting the Alarm Relay Wires from the SRX5800 Services Gateway Craft Interface

To disconnect the alarm relay wires from the services gateway and an alarm-reporting device (see Figure 57 on page 148):

1. Disconnect the existing wire at the external device.
2. Attach an ESD grounding strap to your bare wrist, and connect the strap to one of the ESD points on the chassis.
3. Using a 2.5-mm flat-blade screwdriver, loosen the small screws on the face of the terminal block and remove the block from the relay contact.
4. Using the 2.5-mm flat-blade screwdriver, loosen the small screws on the side of the terminal block. Remove existing wires from the slots in the front of the block.

Figure 57: Alarm Relay Contacts

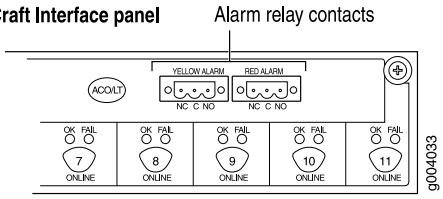

Removing the SRX5800 Services Gateway Craft Interface

To remove the craft interface (see Figure 58 on page 149):

1. Attach an ESD grounding strap to your bare wrist, and connect the strap to one of the ESD points on the chassis.
2. Detach any external devices connected to the craft interface.
3. Loosen the captive screws at the left and right corners of the craft interface faceplate.
4. Grasp the craft interface faceplate and carefully tilt it toward you until it is horizontal.
5. Disconnect the ribbon cable from the back of the faceplate by gently pressing on both sides of the latch with your thumb and forefinger. Remove the craft interface from the chassis.

Copyright © 2014, Juniper Networks, Inc.

Figure 58: Removing the Craft Interface

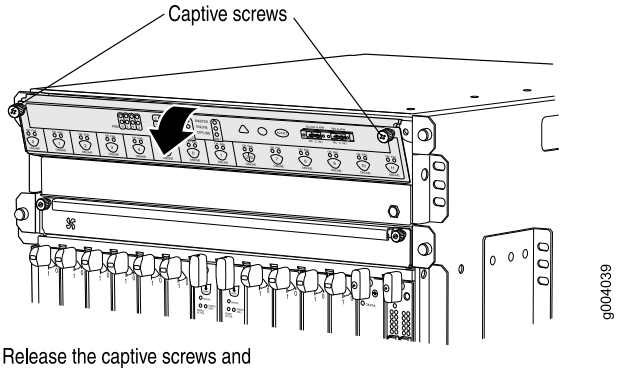

Release the captive screws and tilt the craft interface toward you.

Installing the SRX5800 Services Gateway Craft Interface

To install the craft interface (see Figure 59 on page 149):

1. Attach an ESD grounding strap to your bare wrist, and connect the strap to one of the ESD points on the chassis.
2. Grasp the craft interface with one hand and hold the bottom edge of the craft interface with the other hand to support its weight.
3. Orient the ribbon cable so that it plugs into the connector socket. The connector is keyed and can be inserted only one way.
4. Align the bottom of the craft interface with the sheet metal above the card cage and press it into place.
5. Tighten the screws on the left and right corners of the craft interface faceplate.
6. Reattach any external devices connected to the craft interface.

Figure 59: Installing the Craft Interface

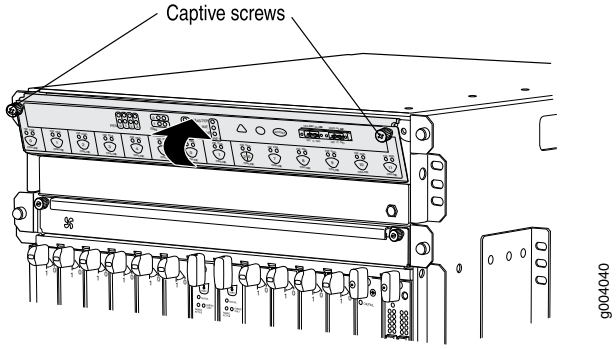

Rest lower edge of the craft interface in the chassis bay, then tilt it toward the chassis, and secure the screws.

Connecting the Alarm Relay Wires to the SRX5800 Services Gateway Craft Interface

To connect the alarm relay wires between a services gateway and an alarm-reporting device (see Figure 60 on page 150):

1. Prepare the required length of replacement wire with gauge between 28-AWG and 14-AWG (0.08 and 2.08 mm^2).
2. Insert the replacement wires into the slots in the front of the block. Use a 2.5-mm flat-blade screwdriver to tighten the screws and secure the wire.
3. Attach an ESD grounding strap to your bare wrist, and connect the strap to one of the ESD points on the chassis.
4. Plug the terminal block into the relay contact, and use a 2.5-mm flat-blade screwdriver to tighten the screws on the face of the block.
5. Attach the other end of the wires to the external device.

Figure 60: Alarm Relay Contacts

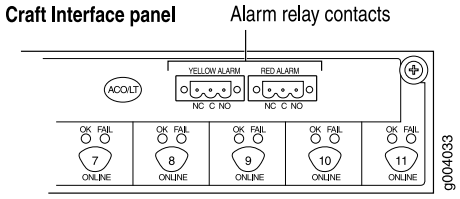

Related Documentation

- SRX5800 Services Gateway Craft Interface Overview on page 20
- SRX5800 Services Gateway Craft Interface Alarm LEDs and Alarm Cutoff/Lamp Test Button on page 21
- SRX5800 Services Gateway Craft Interface Host Subsystem LEDs on page 22
- SRX5800 Services Gateway Craft Interface Power Supply LEDs on page 23
- SRX5800 Services Gateway Craft Interface Card OK/Fail LEDs on page 23
- SRX5800 Services Gateway Craft Interface Fan LEDs on page 24
- SRX5800 Services Gateway Craft Interface Online Buttons on page 24
- SRX5800 Services Gateway Craft Interface Alarm Relay Contacts on page 26
- Troubleshooting the SRX5800 Services Gateway with the Craft Interface LEDs on page 136

Replacing an SRX5800 Services Gateway Fan Tray

To replace a fan tray, perform the following procedures in sequence:

1. Removing an SRX5800 Services Gateway Fan Tray on page 151
2. Installing an SRX5800 Services Gateway Fan Tray on page 153

Copyright © 2014, Juniper Networks, Inc.

Removing an SRX5800 Services Gateway Fan Tray

NOTE: To prevent overheating, install the replacement fan tray immediately after removing the existing fan tray. Do not operate the services gateway for more than two minutes without both fan trays installed.

To remove the upper or lower fan tray (see Figure 61 on page 152 and Figure 62 on page 153):

1. Attach an ESD grounding strap to your bare wrist, and connect the strap to one of the ESD points on the chassis.
2. Reposition the cable manager before removing the lower front fan tray:
   a. Unwrap any cables on the cable manager and remove the cables from the tray. Arrange the cables so that they do not block the front of the cable manager and tray, and secure them with temporary fasteners so that they are not supporting their own weight as they hang from the connector.
   b. Simultaneously pull the two releases labeled PULL on the cable manager. Lift it up and outward to lock it in place.
3. Loosen the captive screw on each side of the fan tray faceplate.
4. Grasp both sides of the fan tray and pull it out approximately 1 to 3 inches.

   WARNING: To avoid injury, keep tools and your fingers away from the fans as you slide the fan tray out of the chassis. The fans might still be spinning.

5. Pause for approximately 15 seconds to allow the fans to stop spinning.
6. When the fans stop spinning, press on the two latches located on the inside of the fan tray.
7. Place one hand under the fan tray to support it and pull the fan tray completely out of the chassis.
8. Proceed to "Installing an SRX5800 Services Gateway Fan Tray" on page 153 to install the replacement fan tray.

Copyright © 2014, Juniper Networks, Inc.

Figure 61: Removing an Upper Fan Tray (Standard-Capacity Shown, High-Capacity Similar)

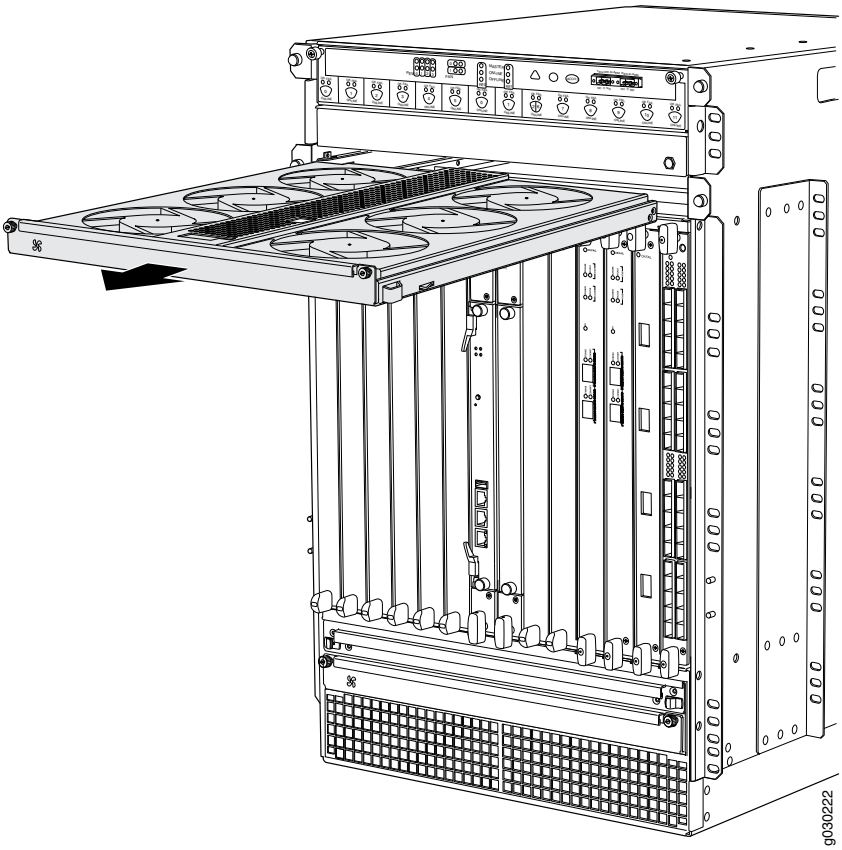

Copyright © 2014, Juniper Networks, Inc.

Figure 62: Removing a Lower Fan Tray (Standard-Capacity Shown, High-Capacity Similar)

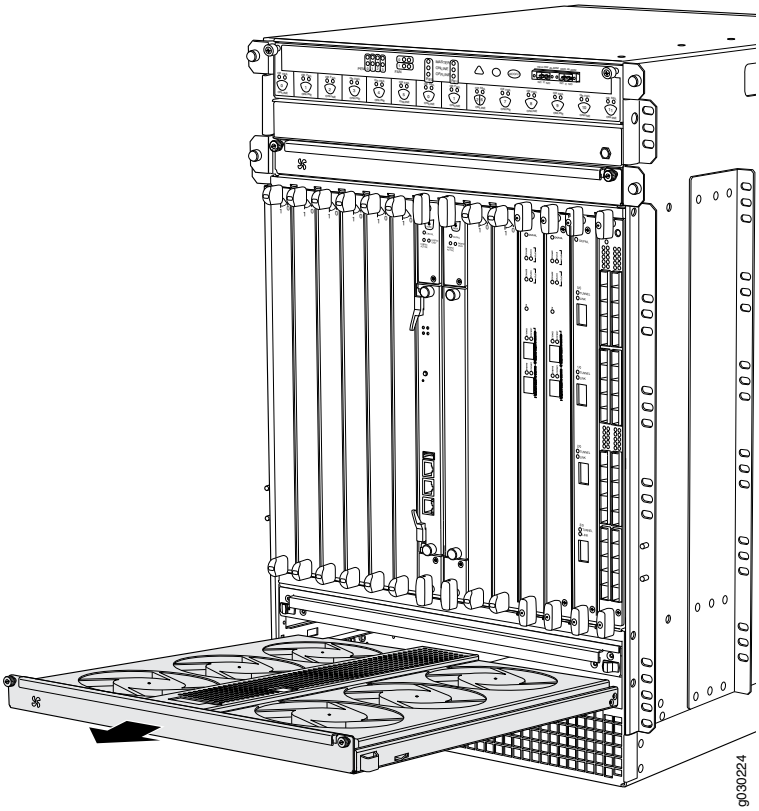

Installing an SRX5800 Services Gateway Fan Tray

NOTE: To prevent overheating, install the replacement fan tray immediately after removing the existing fan tray. Do not operate the services gateway for more than two minutes without both fan trays installed.

To install a fan tray (see Figure 63 on page 154 and Figure 64 on page 155):

1. Attach an ESD grounding strap to your bare wrist, and connect the strap to one of the ESD points on the chassis.
2. Grasp the fan tray on each side and insert it straight into the chassis. Note the correct orientation by the "this side up" label on the top surface of the fan tray.
3. Tighten the captive screws on each side of the fan tray faceplate to secure it in the chassis.
4. Lower the cable manager back into position, if necessary.

Copyright © 2014, Juniper Networks, Inc.

Figure 63: Installing an Upper Fan Tray (Standard-Capacity Shown, High-Capacity Similar)

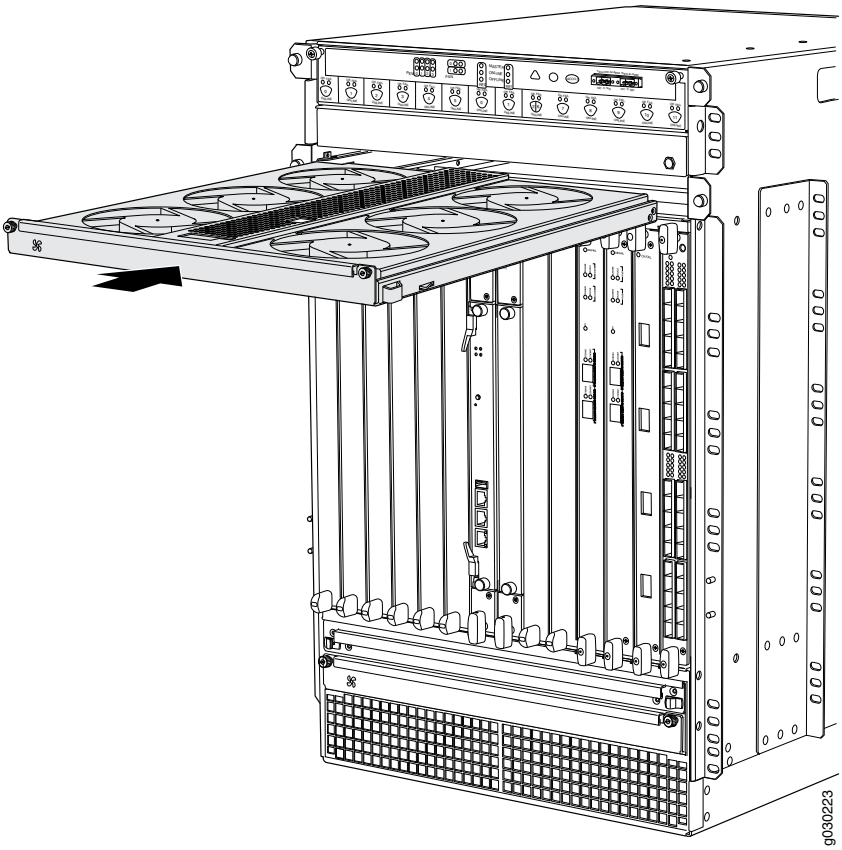

Copyright © 2014, Juniper Networks, Inc.

Figure 64: Installing a Lower Fan Tray (Standard-Capacity Shown, High-Capacity Similar)

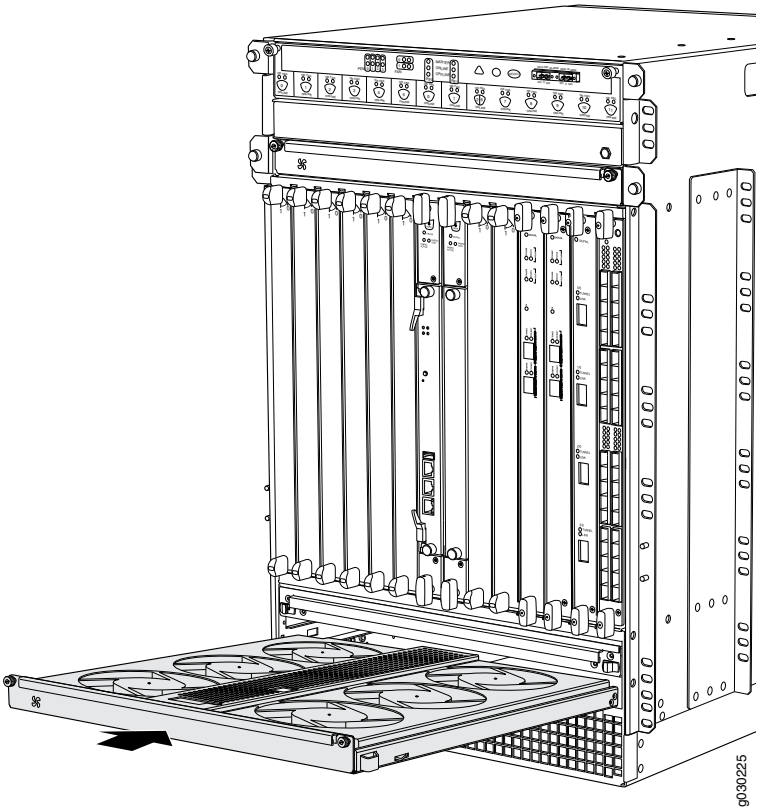

Related Documentation

- Removing Fan Trays Before Installing the SRX5800 Services Gateway Chassis on page 72
- Reinstalling Fan Trays After Installing the SRX5800 Services Gateway Chassis on page 80
- Maintaining the Fan Trays on the SRX5800 Services Gateway on page 123

Replacing the SRX5800 Services Gateway Air Filter

You should change the air filter every six months.To replace the air filter, perform the following procedures in sequence:

1. Removing the SRX5800 Services Gateway Air Filter on page 155
2. Installing the SRX5800 Services Gateway Air Filter on page 156

Removing the SRX5800 Services Gateway Air Filter

CAUTION: Do not run the services gateway for more than two minutes without the air filter in place.

Copyright © 2014, Juniper Networks, Inc.

CAUTION: Always keep the air filter in place while the services gateway is operating, except during replacement. Because the fans are very powerful, they could pull small bits of wire or other materials into the services gateway through the unfiltered air intake. This could damage the services gateway components.

To remove the air filter (see Figure 65 on page 156):

1. Attach an ESD grounding strap to your bare wrist, and connect the strap to one of the ESD points on the chassis.
2. Unwrap any cables on the cable manager and remove the cables from the tray. Arrange the cables so that they do not block the front of the cable manager and tray, and secure them with temporary fasteners so that they are not supporting their own weight as they hang from the connector.

   CAUTION: Do not let fiber-optic cable hang free from the connector. Do not allow fastened loops of cable to dangle, which stresses the cable at the fastening point.

3. Simultaneously pull the two releases labeled **PULL** on the cable manager. Lift it up and outward to lock it in place to access the air filter.
4. Slide the air filter tray out of the chassis.
5. Lift the air filter out of the air filter tray.

Figure 65: Removing the Air Filter (Standard-Capacity Filter Tray Shown, High-Capacity Similar)

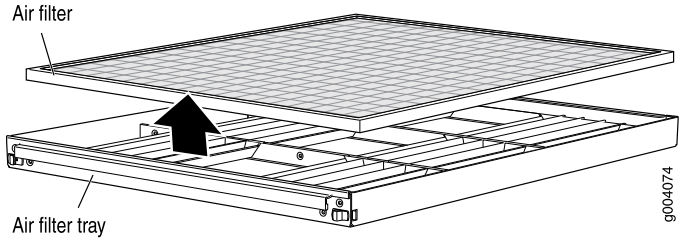

Installing the SRX5800 Services Gateway Air Filter

You should change the air filter every six months.

To install the air filter (see Figure 66 on page 157):

1. Attach an ESD grounding strap to your bare wrist, and connect the strap to one of the ESD points on the chassis.
2. Ensure the air filter is right side up.
3. Place the air filter into the air filter tray.

Copyright © 2014, Juniper Networks, Inc.

4. Insert the air filter tray into the chassis by sliding it straight into the chassis until it stops.
5. Lower the cable manager back into position.
6. Rearrange the cables in the cable manager.

Figure 66: Installing the Air Filter Standard-Capacity Filter Tray Shown, High-Capacity Similar)

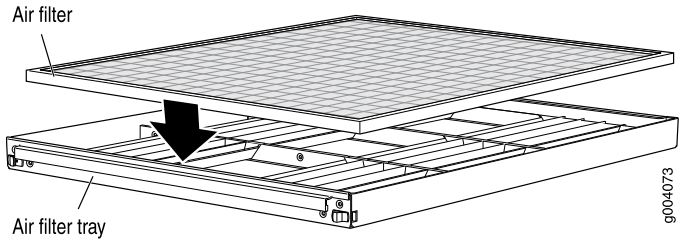

Related Documentation

- Maintaining the Air Filter on the SRX5800 Services Gateway on page 122

Replacing SRX5800 Services Gateway Host Subsystem Components

- Taking the SRX5800 Services Gateway Host Subsystem Offline on page 157
- Operating and Positioning the SRX5800 Services Gateway SCB Ejectors on page 158
- Replacing an SRX5800 Services Gateway SCB on page 158
- Replacing the SRX5800 Services Gateway Routing Engine on page 162

Taking the SRX5800 Services Gateway Host Subsystem Offline

The host subsystem is composed of an SCB with a Routing Engine installed in it. You take the host subsystem offline and bring it online as a unit. Before you replace an SCB or a Routing Engine, you must take the host subsystem offline. Taking the host subsystem offline causes the device to shut down.

To take the host subsystem offline:

1. On the console or other management device connected to the Routing Engine that is paired with the SCB you are removing, enter CLI operational mode and issue the following command. The command shuts down the Routing Engine cleanly, so its state information is preserved:

   ```
   user@host> request system halt
   ```

2. Wait until a message appears on the console confirming that the operating system has halted.

   For more information about the command, see *Junos OS System Basics and Services Command Reference* at www.juniper.net/techpubs/.

NOTE: The SCB might continue forwarding traffic for approximately 5 minutes after the request system halt command has been issued.

Copyright © 2014, Juniper Networks, Inc.

Related Documentation

- Operating and Positioning the SRX5800 Services Gateway SCB Ejectors on page 158
- Removing an SRX5800 Services Gateway SCB on page 159
- Installing an SRX5800 Services Gateway SCB on page 160
- Replacing the SRX5800 Services Gateway Routing Engine on page 162
- Replacing the Management Ethernet Cable on an SRX5800 Services Gateway on page 167

Operating and Positioning the SRX5800 Services Gateway SCB Ejectors

- When removing or inserting an SCB, ensure that the SCBs or blank panels in adjacent slots are fully inserted to avoid hitting them with the ejector handles. The ejector handles require that all adjacent components be completely inserted so the ejector handles do not hit them, which could result in damage.
- The ejector handles have a center of rotation and need to be stored toward the center of the board. Ensure the long ends of the ejectors located at both the top and the bottom of the board are vertical and pressed as far as possible toward the center of the board. Once you have installed an SCB, place the ejector handles in their proper position, vertically and toward the center of the board. To avoid blocking the visibility of the LEDs,position the ejectors over the PARK icon.
- To insert or remove the SCB card, slide the ejector across the SCB horizontally, rotate it, and slide it again another quarter of a turn. Turn the ejector again and repeat as necessary. Use the indexing feature to maximize leverage and to avoid hitting any adjacent components.
- Operate both ejector handles simultaneously. The insertion force on an SCB is too great for one ejector.

Related Documentation

- Taking the SRX5800 Services Gateway Host Subsystem Offline on page 157
- Replacing an SRX5800 Services Gateway SCB on page 158
- Replacing the SRX5800 Services Gateway Routing Engine on page 162
- Replacing the Management Ethernet Cable on an SRX5800 Services Gateway on page 167

Replacing an SRX5800 Services Gateway SCB

Before replacing an SCB, read the guidelines in "Operating and Positioning the SRX5800 Services Gateway SCB Ejectors" on page 158. To replace an SCB, perform the following procedures:

1. Removing an SRX5800 Services Gateway SCB on page 159
2. Installing an SRX5800 Services Gateway SCB on page 160

Copyright © 2014, Juniper Networks, Inc.

Removing an SRX5800 Services Gateway SCB

To remove an SCB (see Figure 67 on page 160):

NOTE: The SCB and Routing Engine are removed as a unit. You can also remove the Routing Engine separately.

CAUTION: Before removing an SCB, ensure that you know how to operate the ejector handles properly to avoid damage to the equipment.

1. Power off the device.
2. Place an electrostatic bag or antistatic mat on a flat, stable surface.
3. Attach an ESD grounding strap to your bare wrist, and connect the strap to one of the ESD points on the chassis.
4. Rotate the ejector handles simultaneously counterclockwise to unseat the SCB.
5. Grasp the ejector handles and slide the SCB about halfway out of the chassis.
6. Place one hand underneath the SCB to support it and slide it completely out of the chassis.
7. Place the SCB on the antistatic mat.
8. If you are not replacing the SCB now, install a blank panel over the empty slot.

Copyright © 2014, Juniper Networks, Inc.

Figure 67: Removing an SCB

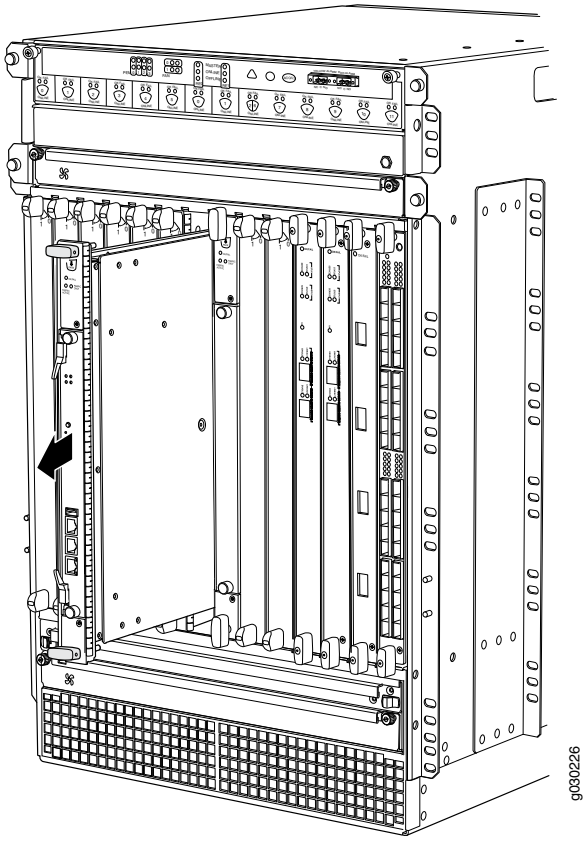

Installing an SRX5800 Services Gateway SCB

To install an SCB (see Figure 68 on page 162):

1. Attach an ESD grounding strap to your bare wrist, and connect the strap to one of the ESD points on the chassis.
2. Power off the services gateway.
3. Carefully align the sides of the SCB with the guides inside the chassis.
4. Slide the SCB into the chassis until you feel resistance, carefully ensuring that it is correctly aligned.
5. Grasp both ejector handles and rotate them simultaneously clockwise until the SCB is fully seated.
6. Place the ejector handles in the proper position, vertically and toward the center of the board.
7. Power on the services gateway.
8. To verify that the SCB is functioning normally, check the LEDs on its faceplate. The green **OK/FAIL** LED should light steadily a few minutes after the SCB is installed. If the **OK/FAIL** LED is red, remove and install the SCB again. If the **OK/FAIL** LED still lights

Copyright © 2014, Juniper Networks, Inc.

steadily, the SCB is not functioning properly. Contact your customer support representative.

To check the status of the SCB:

```
user@host> show chassis environment cb
CB 0 status:
  State                       Online Master
  Temperature                 30 degrees C / 86 degrees F
  Power 1
    1.2 V                      1202 mV
    1.5 V                      1511 mV
    1.8 V                      1798 mV
    2.5 V                      2481 mV
    3.3 V                      3306 mV
    5.0 V                      4956 mV
    12.0 V                    12084 mV
    1.25 V                     1250 mV
    3.3 V SM3                  3287 mV
    5.0 V RE                   5046 mV
    12.0 V RE                 11910 mV
  Power 2
    11.3 V bias PEM           11292 mV
    4.6 V bias MidPlane        4833 mV
    11.3 V bias FPD           11156 mV
    11.3 V bias POE 0         11253 mV
    11.3 V bias POE 1         11272 mV
  Bus Revision                42
  FPGA Revision               1
CB 1 status:
  State                       Online
  Temperature                 31 degrees C / 87 degrees F
  Power 1
    1.2 V                      1205 mV
    1.5 V                      1508 mV
    1.8 V                      1817 mV
    2.5 V                      2507 mV
    3.3 V                      3306 mV
    5.0 V                      5053 mV
    12.0 V                    12200 mV
    1.25 V                     1256 mV
    3.3 V SM3                  3306 mV
    5.0 V RE                   5091 mV
    12.0 V RE                     0 mV
  Power 2
    11.3 V bias PEM           11214 mV
    4.6 V bias MidPlane        4821 mV
    11.3 V bias FPD           11350 mV
    11.3 V bias POE 0         11350 mV
    11.3 V bias POE 1         11330 mV
  Bus Revision                42
  FPGA Revision               0
```

Copyright © 2014, Juniper Networks, Inc.

Figure 68: Installing an SCB

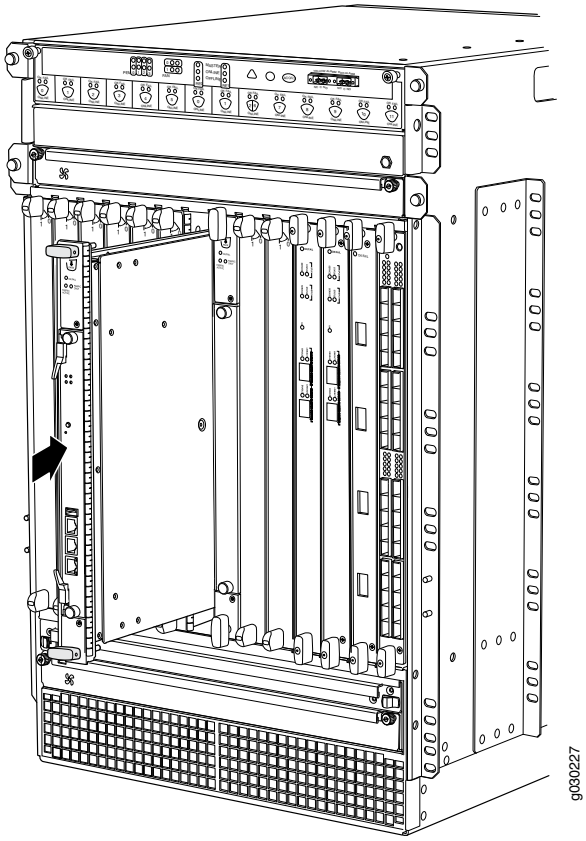

Related Documentation

- SRX5800 Services Gateway SCB Description on page 17
- Operating and Positioning the SRX5800 Services Gateway SCB Ejectors on page 158
- Maintaining the SRX5800 Services Gateway Host Subsystem and SCBs on page 123

Replacing the SRX5800 Services Gateway Routing Engine

To replace the Routing Engine, perform the following procedures:

1. Removing the SRX5800 Services Gateway Routing Engine on page 163
2. Installing the SRX5800 Services Gateway Routing Engine on page 164

Copyright © 2014, Juniper Networks, Inc.

Removing the SRX5800 Services Gateway Routing Engine



CAUTION: **Before you replace a Routing Engine, you must take the host subsystem offline.**

To remove the Routing Engine (see Figure 69 on page 164):

1. Take the host subsystem offline as described in "Taking the SRX5800 Services Gateway Host Subsystem Offline" on page 157.
2. Place an electrostatic bag or antistatic mat on a flat, stable surface.
3. Attach an ESD grounding strap to your bare wrist, and connect the strap to one of the ESD points on the chassis.
4. Loosen the captive screws at each end of the Routing Engine faceplate.
5. Flip the ejector handles outward to unseat the Routing Engine.
6. Grasp the Routing Engine by the ejector handles and slide it about halfway out of the chassis.
7. Place one hand underneath the Routing Engine to support it and slide it completely out of the chassis.
8. Place the Routing Engine on the antistatic mat.

Copyright © 2014, Juniper Networks, Inc.

Figure 69: Removing the Routing Engine

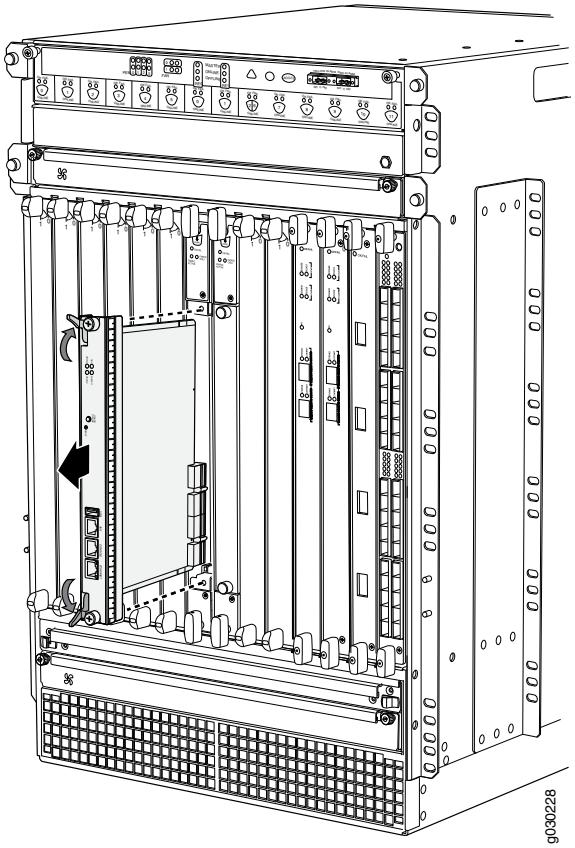

Installing the SRX5800 Services Gateway Routing Engine

If you install only one Routing Engine in the services gateway, you must install it in the slot in the front panel of SCB0. If you install a second Routing Engine to use the dual chassis cluster control link feature, you install it in the slot in the front panel of SCB1.

To install a Routing Engine into an SCB (see Figure 70 on page 165):

1. If you have not already done so, take the host subsystem offline. See "Taking the SRX5800 Services Gateway Host Subsystem Offline" on page 157.
2. Attach an ESD grounding strap to your bare wrist, and connect the strap to one of the ESD points on the chassis.
3. Ensure that the ejector handles are not in the locked position. If necessary, flip the ejector handles outward.
4. Place one hand underneath the Routing Engine to support it.
5. Carefully align the sides of the Routing Engine with the guides inside the opening on the SCB.
6. Slide the Routing Engine into the SCB until you feel resistance, and then press the Routing Engine's faceplate until it engages the connectors.

Copyright © 2014, Juniper Networks, Inc.

7. Press both of the ejector handles inward to seat the Routing Engine.
8. Tighten the captive screws on the top and bottom of the Routing Engine faceplate.
9. Power on the services gateway.

   The Routing Engine might require several minutes to boot.

   After the Routing Engine boots, verify that it is installed correctly by checking the **RE0** and **RE1** LEDs on the craft interface. If the services gateway is operational and the Routing Engine is functioning properly, the green **ONLINE** LED lights steadily. If the red **FAIL** LED lights steadily instead, remove and install the Routing Engine again. If the red **FAIL** LED still lights steadily, the Routing Engine is not functioning properly. Contact your customer support representative.

   To check the status of the Routing Engine, use the CLI command:

```
user@host> show chassis routing-engine
Routing Engine status:
  Slot 0:
    Current state                  Master ...
```

   For more information about using the CLI, see the CLI Explorer.

Figure 70: Installing the Routing Engine

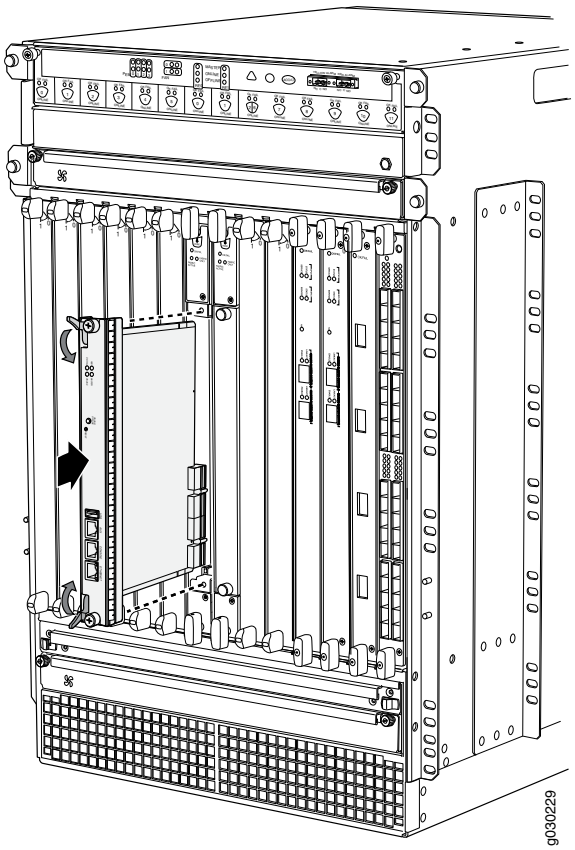

10. If the Routing Engine was replaced on one of the nodes in a chassis cluster, then you need to copy certificates and key pairs from the other node in the cluster:

    a. Start the shell interface as a root user on both nodes of the cluster.

    b. Verify files in the **/var/db/certs/common/key-pair** folder of the source node (other node in the cluster) and destination node (node on which the Routing Engine was replaced) by using the following command:

       ls -la /var/db/certs/common/key-pair/

    c. If the same files exist on both nodes, back up the files on the destination node to a different location. For example:

       ```
       root@SRX-B% pwd
       /var/db/certs/common/key-pair
       root@SRX-B% ls -la
       total 8
       drwx------ 2 root wheel 512 Jan 22 15:09
       drwx------ 7 root wheel 512 Mar 26 2009
       -rw-r--r-- 1 root wheel 0 Jan 22 15:09 test
       root@SRX-B% mv test test.old
       root@SRX-B% ls -la
       total 8
       drwx------ 2 root wheel 512 Jan 22 15:10
       drwx------ 7 root wheel 512 Mar 26 2009
       -rw-r--r-- 1 root wheel 0 Jan 22 15:09 test.old
       root@SRX-B%
       ```

    d. Copy the files from the **/var/db/certs/common/key-pair** folder of the source node to the same folder on the destination node.

       NOTE: Ensure that you use the correct node number for the destination node.

    e. In the destination node, use the **ls –la** command to verify that all files from the **/var/db/certs/common/key-pair** folder of the source node are copied.

    f. Repeat Step b through Step e for the **/var/db/certs/common/local** and **/var/db/certs/common/certification-authority** folders.

Related Documentation

- SRX5800 Services Gateway Routing Engine Description on page 19
- Taking the SRX5800 Services Gateway Host Subsystem Offline on page 157
- Replacing the SRX5800 Services Gateway Console or Auxiliary Cable on page 167
- Replacing an SRX5800 Services Gateway SCB on page 158

Copyright © 2014, Juniper Networks, Inc.

Replacing Connections to SRX5800 Services Gateway Routing Engine Interface Ports

- Replacing the Management Ethernet Cable on an SRX5800 Services Gateway on page 167
- Replacing the SRX5800 Services Gateway Console or Auxiliary Cable on page 167

Replacing the Management Ethernet Cable on an SRX5800 Services Gateway

One Ethernet cable with RJ-45 connectors is provided with the services gateway. To replace the cable connected to the **ETHERNET** port:

1. Attach an electrostatic discharge (ESD) grounding strap to your bare wrist, and connect the strap to one of the ESD points on the chassis.
2. Press the tab on the connector and pull the connector straight out of the port. Figure 71 on page 167 shows the connector.
3. Disconnect the cable from the network device.
4. Plug one end of the replacement cable into the **ETHERNET** port. Figure 72 on page 167 shows the port.
5. Plug the other end of the cable into the network device.

Figure 71: Cable Connector

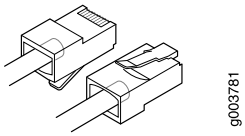

Figure 72: Ethernet Port

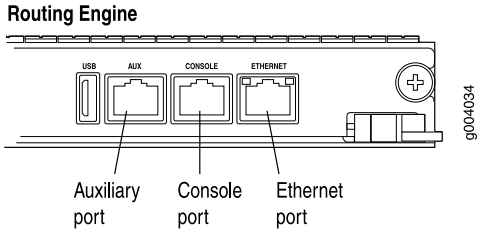

Related Documentation

- Preventing Electrostatic Discharge Damage to the SRX5800 Services Gateway on page 241
- Replacing the SRX5800 Services Gateway Console or Auxiliary Cable on page 167
- Replacing the SRX5800 Services Gateway Routing Engine on page 162

Replacing the SRX5800 Services Gateway Console or Auxiliary Cable

To use a system console to configure and manage the Routing Engine, connect it to the **CONSOLE** port on the Routing Engine. To use a laptop, modem, or other auxiliary device, connect it to the **AUX** port on the Routing Engine. Both ports accept a cable with an RJ-45

Copyright © 2014, Juniper Networks, Inc.

connector. One RJ-45/DB-9 cable is provided with the services gateway. If you want to connect a device to both ports, you must supply another cable.

To replace a cable connected to a management console or auxiliary device:

1. Attach an electrostatic discharge (ESD) grounding strap to your bare wrist, and connect the strap to one of the ESD points on the chassis.
2. Press the tab on the connector and pull the connector straight out of the port.
3. Disconnect the cable from the console or auxiliary device.
4. Plug the RJ-45 end of the replacement serial cable into the **CONSOLE** or **AUX** port. Figure 73 on page 168 shows the external device ports on the Routing Engine.
5. Plug the female DB-9 end into the console or auxiliary device's serial port.

Figure 73: Auxiliary and Console Ports

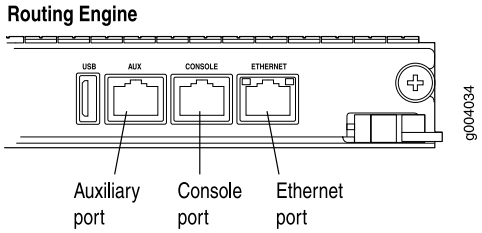

Related Documentation

- Preventing Electrostatic Discharge Damage to the SRX5800 Services Gateway on page 241
- Replacing the SRX5800 Services Gateway Routing Engine on page 162
- Replacing the Management Ethernet Cable on an SRX5800 Services Gateway on page 167

Replacing SRX5800 Services Gateway IOCs

To replace an IOC, perform the following procedures:

1. Removing an SRX5800 Services Gateway IOC on page 168
2. Installing an SRX5800 Services Gateway IOC on page 170

Removing an SRX5800 Services Gateway IOC

An IOC weighs up to 13.1 lb (5.9 kg). Be prepared to accept its full weight.

To remove an IOC (see Figure 74 on page 170):

1. Have ready a replacement IOC or IOC blank panel and an antistatic mat for the IOC. Also have ready rubber safety caps for each optical interface on the IOC you are removing.
2. Attach an electrostatic discharge (ESD) grounding strap to your bare wrist, and connect the strap to one of the ESD points on the chassis.

Copyright © 2014, Juniper Networks, Inc.

3. Label the cables connected to each port on the IOC so that you can later reconnect the cables to the correct ports.
4. Use one of the following methods to take the IOC offline:
   - Press and hold the corresponding IOC online button on the craft interface. The green **OK** LED next to the button begins to blink. Hold the button down until the LED goes off.
   - Issue the following CLI command:

     `user@host>` **request chassis fpc slot *slot-number* offline**

     For more information about the command, see *Junos OS System Basics and Services Command Reference* at www.juniper.net/techpubs/.
5. Disconnect the cables from the IOC.



WARNING: Do not look directly into a fiber-optic transceiver or into the ends of fiber-optic cables. Fiber-optic transceivers and fiber-optic cable connected to a transceiver emit laser light that can damage your eyes.



CAUTION: Do not leave a fiber-optic transceiver uncovered except when you are inserting or removing cable. The safety cap keeps the port clean and prevents accidental exposure to laser light.



CAUTION: Avoid bending fiber-optic cable beyond its minimum bend radius. An arc smaller than a few inches in diameter can damage the cable and cause problems that are difficult to diagnose.

6. Immediately cover each optical transceivers and the end of each fiber-optic cable with a rubber safety cap.
7. Arrange the disconnected cables in the cable manager to prevent the cables from developing stress points.
8. Simultaneously turn both of the ejector handles counterclockwise to unseat the IOC.
9. Grasp the handles and slide the IOC straight out of the card cage halfway.
10. Place one hand around the front of the IOC and the other hand under it to support it. Slide the IOC completely out of the chassis, and place it on the antistatic mat or in the electrostatic bag.



CAUTION: The weight of the IOC is concentrated in the back end. Be prepared to accept the full weight—up to 13.1 lb (5.9 kg)—as you slide the IOC out of the chassis.

When the IOC is out of the chassis, do not hold it by the ejector handles, bus bars, or edge connectors. They cannot support its weight.

Copyright © 2014, Juniper Networks, Inc.

Do not stack IOC on top of one another after removal. Place each one individually in an electrostatic bag or on its own antistatic mat on a flat, stable surface.

11. If you are not reinstalling an IOC into the empy slot within a short time, install a blank IOC panel over the slot to maintain proper airflow in the card cage.

CAUTION: After removing an IOC from the chassis, wait at least 30 seconds before reinserting it, removing an IOC from a different slot, or inserting an IOC into a different slot.

Figure 74: Removing an IOC

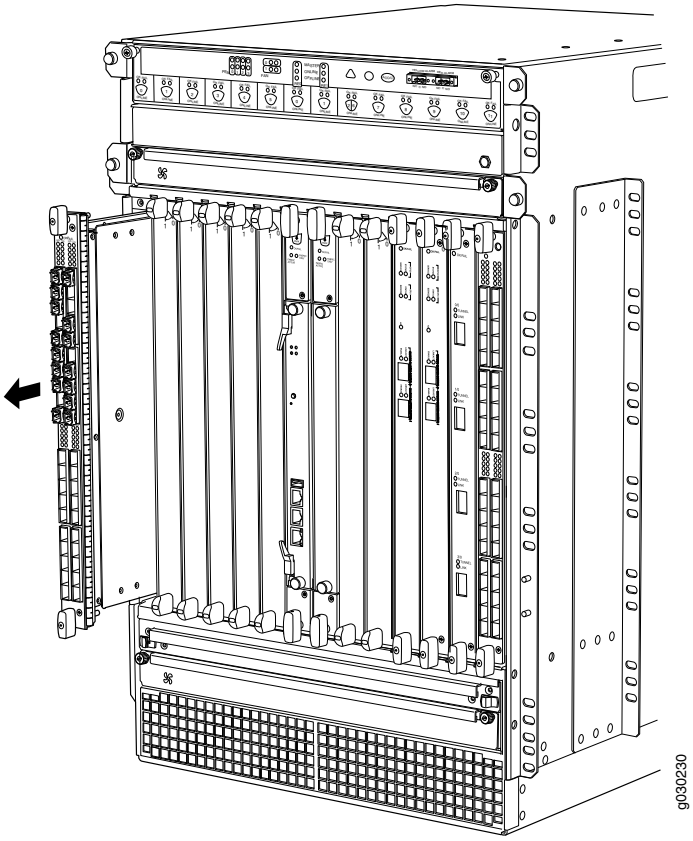

Installing an SRX5800 Services Gateway IOC

An IOC weighs up to 13.1 lb (5.9 kg). Be prepared to accept its full weight.

Copyright © 2014, Juniper Networks, Inc.

To install an IOC (see Figure 75 on page 172):

1. Attach an electrostatic discharge (ESD) grounding strap to your bare wrist, and connect the strap to one of the ESD points on the chassis.
2. Place the IOC on an antistatic mat or remove it from its electrostatic bag.
3. Identify the slot on the services gateway where it will be installed.
4. Verify that each fiber-optic transceiver is covered with a rubber safety cap. If it does not, cover the transceiver with a safety cap.
5. Orient the IOC so that the faceplate faces you.
6. Lift the IOC into place and carefully align the top and bottom edges of the IOC with the guides inside the card cage.
7. Slide the IOC all the way into the card cage until you feel resistance.
8. Grasp both ejector handles and rotate them clockwise simultaneously until the IOC is fully seated.
9. Remove the rubber safety cap from each fiber-optic transceiver and cable.



WARNING: **Do not look directly into a fiber-optic transceiver or into the ends of fiber-optic cables. Fiber-optic transceivers and fiber-optic cable connected to a transceiver emit laser light that can damage your eyes.**

10. Insert the cables into the cable connector ports on each IOC (see Figure 76 on page 173).
11. Arrange the cable in the cable manager to prevent it from dislodging or developing stress points. Secure the cable so that it is not supporting its own weight as it hangs to the floor. Place excess cable out of the way in a neatly coiled loop. Placing fasteners on the loop helps to maintain its shape.



CAUTION: **Do not let fiber-optic cable hang free from the connector. Do not allow fastened loops of cable to dangle, which stresses the cable at the fastening point.**



CAUTION: **Avoid bending fiber-optic cable beyond its minimum bend radius. An arc smaller than a few inches in diameter can damage the cable and cause problems that are difficult to diagnose.**

12. Use one of the following methods to bring the IOC online:
    - Press and hold the corresponding IOC online button on the craft interface until the green **OK** LED next to the button lights steadily, in about 5 seconds.
    - Issue the following CLI command:

      `user@host>` **request chassis fpc slot *slot-number* online**

Copyright © 2014, Juniper Networks, Inc.

For more information about the command, see *Junos OS System Basics and Services Command Reference* at www.juniper.net/techpubs/.

CAUTION: After the OK LED turns green, wait at least 30 seconds before removing the IOC again, removing an IOC from a different slot, or inserting an IOC in a different slot.

You can also verify that the IOC is functioning correctly by issuing the **show chassis fpc** and **show chassis fpc pic-status** commands.

13. Reboot the services gateway.

Figure 75: Installing an IOC

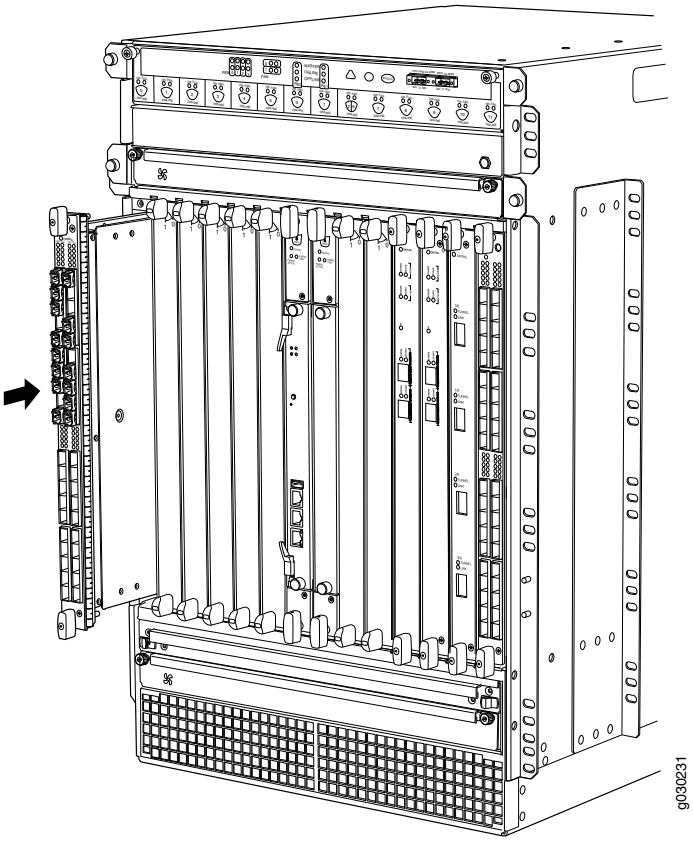

Copyright © 2014, Juniper Networks, Inc.

Figure 76: Attaching a Cable to an IOC

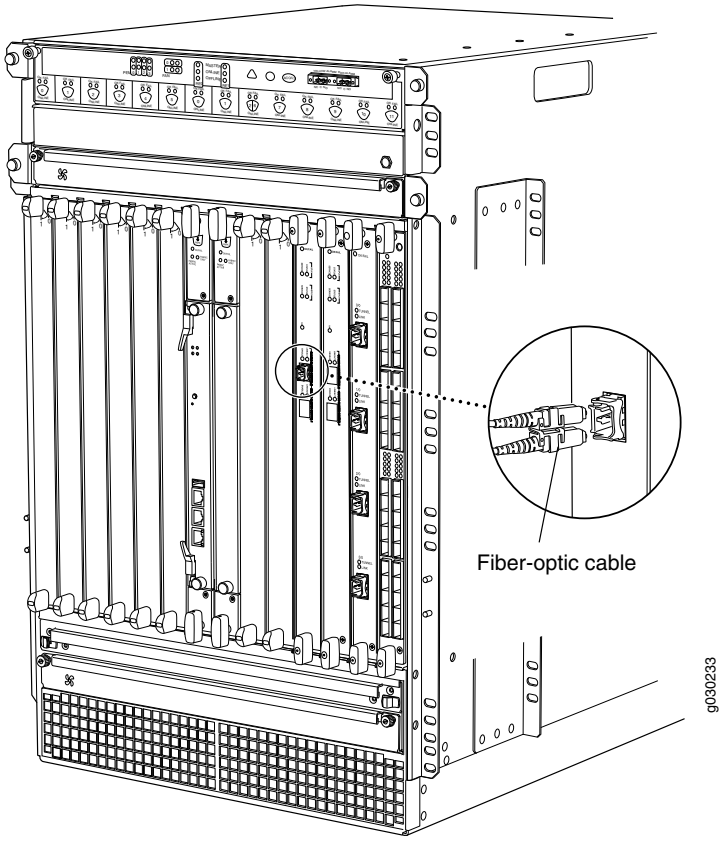

Related Documentation

- Connecting Network Cables to SRX5800 Services Gateway IOCs and Port Modules on page 91
- Replacing SRX5800 Services Gateway Flex IOCs on page 173

Replacing SRX5800 Services Gateway Flex IOCs

To replace a Flex IOC, perform the following procedures:

1. Removing an SRX5800 Services Gateway Flex IOC on page 173
2. Installing an SRX5800 Services Gateway Flex IOC on page 175

Removing an SRX5800 Services Gateway Flex IOC

A Flex IOC weighs up to 13.1 lb (5.9 kg). Be prepared to accept the full weight of the card as you remove it.

To remove a Flex IOC (see Figure 77 on page 175):

1. Have ready a replacement card or blank panel and an antistatic mat for the Flex IOC.
2. Attach an electrostatic discharge (ESD) grounding strap to your bare wrist, and connect the strap to one of the ESD points on the chassis.

Copyright © 2014, Juniper Networks, Inc.

3. Use one of the following methods to take the Flex IOC offline:

   - Press and hold the corresponding online button on the craft interface. The green **OK** LED next to the button begins to blink. Hold the button down until the LED goes off.
   - Issue the following CLI command:

     `user@host>` **request chassis fpc slot** *`slot-number`* **offline**

     For more information about the command, see *Junos OS System Basics and Services Command Reference* at www.juniper.net/techpubs/.

4. If you have not already done so, remove the port modules installed in the Flex IOC.
5. Simultaneously turn both of the ejector handles counterclockwise to unseat the Flex IOC.
6. Grasp the handles and slide the Flex IOC straight out of the card cage halfway.
7. Place one hand around the front of the Flex IOC and the other hand under it to support it. Slide the Flex IOC completely out of the chassis, and place it on the antistatic mat or in the electrostatic bag.

   

   CAUTION: The weight of the Flex IOC is concentrated in the back end. Be prepared to accept the full weight—up to 13 lb (5.9 kg)—as you slide the Flex IOC out of the chassis.

   When the Flex IOC is out of the chassis, do not hold it by the ejector handles, bus bars, or edge connectors. They cannot support its weight.

   Do not stack Flex IOCs on top of one another after removal. Place each one individually in an electrostatic bag or on its own antistatic mat on a flat, stable surface.

8. If you are not reinstalling a replacement card into the empty slot within a short time, install a blank panel over the slot to maintain proper airflow in the card cage.

   

   CAUTION: After removing an IOC from the chassis, wait at least 30 seconds before reinserting it, removing an IOC from a different slot, or inserting an IOC into a different slot.

Copyright © 2014, Juniper Networks, Inc.

Figure 77: Removing a Flex IOC

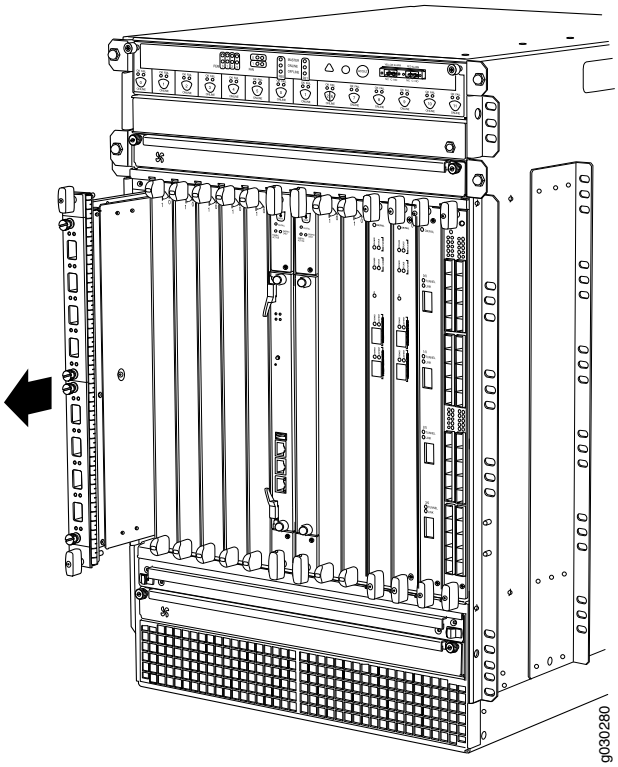

Installing an SRX5800 Services Gateway Flex IOC

NOTE: Your services gateway must be running Junos version 9.5R1 or later in order to recognize Flex IOCs and port modules.

To install a Flex IOC (see Figure 78 on page 176):

1. Attach an electrostatic discharge (ESD) grounding strap to your bare wrist, and connect the strap to one of the ESD points on the chassis.
2. Place the Flex IOC on an antistatic mat or remove it from its electrostatic bag.
3. Identify the slot on the services gateway where you will install the Flex IOC.
4. If you have not already done so, remove the blank panel from the slot where you are installing the Flex IOC.
5. Orient the Flex IOC so that the faceplate faces you, the text on the card is right-side up, and the EMI strip is on the right-hand side.
6. Lift the Flex IOC into place and carefully align first the bottom and then the top of the card with the guides inside the card cage.
7. Slide the Flex IOC all the way into the card cage until you feel resistance.

Copyright © 2014, Juniper Networks, Inc.

Figure 78: Installing a Flex IOC

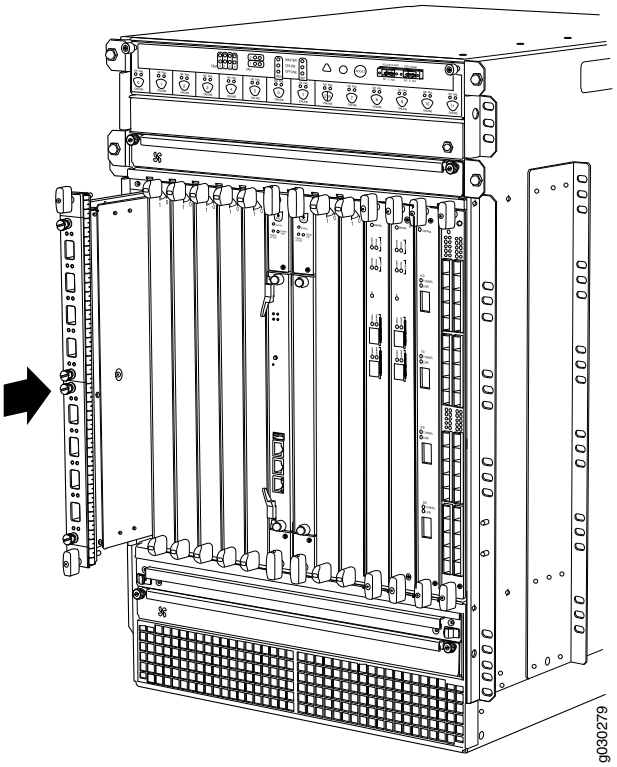

8. Grasp both ejector handles and rotate them clockwise simultaneously until the Flex IOC is fully seated.
9. Use one of the following methods to bring the Flex IOC online:
   - Press and hold the corresponding online button on the craft interface until the green **OK** LED next to the button lights steadily, in about 5 seconds.
   - Issue the following CLI command:

     `user@host>` **request chassis fpc slot** *`slot-number`* **online**

     For more information about the command, see *Junos OS System Basics and Services Command Reference* at www.juniper.net/techpubs/.

CAUTION: After the OK LED turns green, wait at least 30 seconds before removing the card again, removing a card from a different slot, or inserting a card in a different slot.

10. Reboot the services gateway.

Related Documentation

- Connecting Network Cables to SRX5800 Services Gateway IOCs and Port Modules on page 91
- Replacing SRX5800 Services Gateway IOCs on page 168

Copyright © 2014, Juniper Networks, Inc.

Replacing SRX5800 Services Gateway Port Modules

To replace a port module, perform the following procedures:

1. Removing an SRX5800 Services Gateway Port Module on page 177
2. Installing an SRX5800 Services Gateway Port Module on page 179

Removing an SRX5800 Services Gateway Port Module

Port modules are installed in Flex IOCs in the services gateway card cage. A port module weighs up to 1.6 lb (0.7 kg). Be prepared to accept its full weight when you remove or install a port module.

To remove a port module (see Figure 79 on page 178):

1. Have ready a replacement port module or blank panel and an antistatic mat for the port module. Also have ready rubber safety caps for each port on the port module you are removing that uses an optical interface.
2. Attach an electrostatic discharge (ESD) grounding strap to your bare wrist, and connect the strap to one of the ESD points on the chassis.
3. Label the cables connected to each port on the port module so that you can later reconnect the cables to the correct ports.
4. Use one of the following methods to take the port module offline:
   - Insert a pointed tool into the **ONLINE** pinhole on the front panel of the port module to press the button behind it. Hold the button down until the **OK/FAIL** LED goes off.
   - Issue the following CLI command:

     `user@host>` **request chassis fpc-slot** *slot-number* **pic-slot** *slot-number* **offline**

     For more information about the command, see *Junos OS System Basics and Services Command Reference* at www.juniper.net/techpubs/.
5. Disconnect the cables from the port module. If the port module uses fiber-optic cable, immediately cover each transceiver and the end of each cable with a rubber safety cap. Arrange the disconnected cables in the cable management system to prevent the cables from developing stress points.



WARNING: Do not look directly into a fiber-optic transceiver or into the ends of fiber-optic cables. Fiber-optic transceivers and fiber-optic cable connected to a transceiver emit laser light that can damage your eyes.



CAUTION: Do not leave a fiber-optic transceiver uncovered except when you are inserting or removing cable. The safety cap keeps the port clean and prevents accidental exposure to laser light.

Copyright © 2014, Juniper Networks, Inc.

CAUTION: Avoid bending fiber-optic cable beyond its minimum bend radius. An arc smaller than a few inches in diameter can damage the cable and cause problems that are difficult to diagnose.

6. Loosen the captive screws that retain the port module in its slot in the Flex IOC.
7. Grasp the captive screws and slide the port module straight out of the Flex IOC halfway.
8. Place one hand around the front of the port module and the other hand under it to support it. Slide the port module completely out of the Flex IOC, and place it on the antistatic mat or in the electrostatic bag.

Figure 79: Removing a Port Module

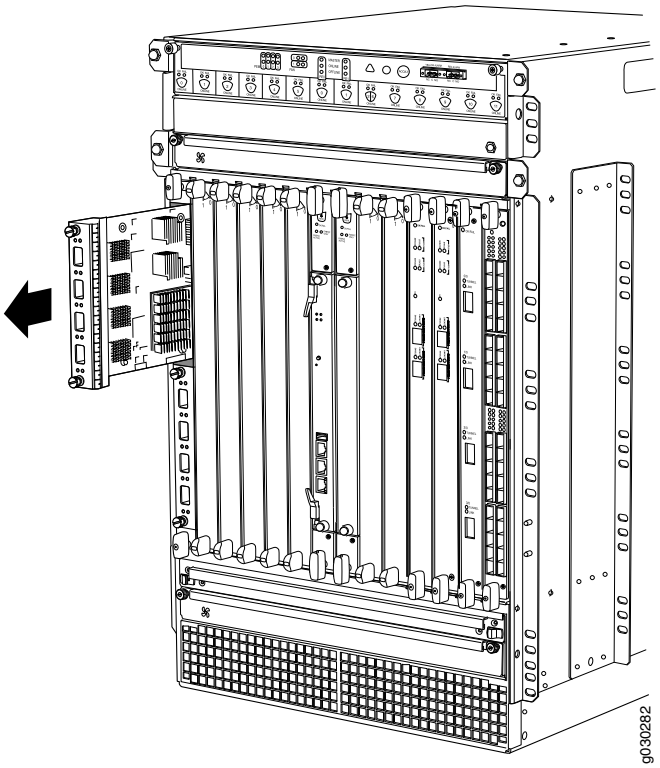

9. If you are not reinstalling a port module into the empty slot within a short time, install a blank panel over the slot to maintain proper airflow in the card cage.

CAUTION: After removing a port module from the chassis, wait at least 30 seconds before reinserting it, removing a port module from a different slot, or inserting a port module into a different slot.

Copyright © 2014, Juniper Networks, Inc.

Installing an SRX5800 Services Gateway Port Module

To install a port module into a Flex IOC (see Figure 80 on page 179):

1. Attach an electrostatic discharge (ESD) grounding strap to your bare wrist, and connect the strap to one of the ESD points on the chassis.
2. If you have not already done so, install the Flex IOC in which you are installing the port module.
3. Place the port module on an antistatic mat or remove it from its electrostatic bag.
4. Verify that each fiber-optic transceiver is covered with a rubber safety cap. If it is not, cover the transceiver with a safety cap.
5. If necessary, remove the blank panel covering the slot in the Flex IOC where you are installing the port module.
6. Orient the port module so that the faceplate faces you.
7. Lift the port module into place and carefully align the top and bottom edges of the port module with the guides inside the Flex IOC.
8. Slide the port module all the way into the Flex IOC until it is fully seated.
9. Tighten both captive screws to secure the port module in the Flex IOC.

Figure 80: Installing a Port Module

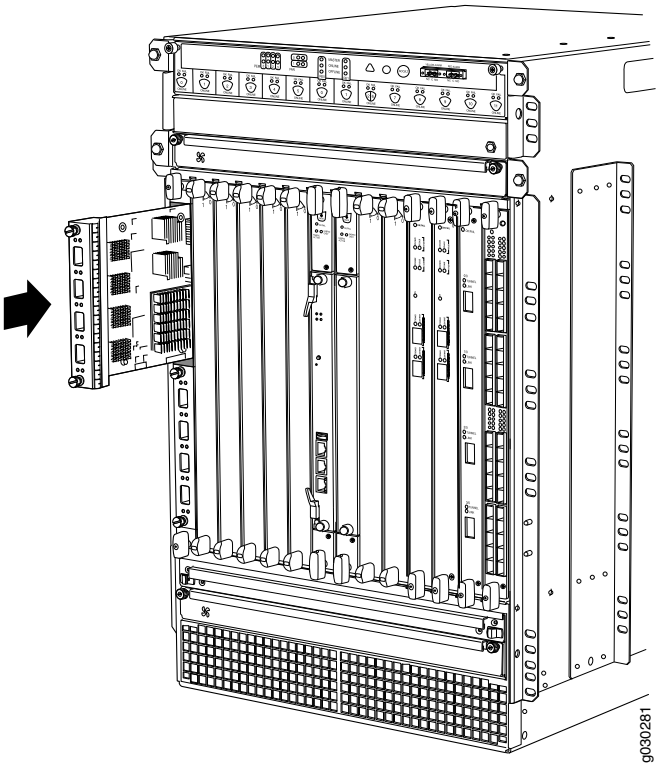

10. If the port module uses fiber-optic interfaces, remove the rubber safety cap from each transceiver and cable.

Copyright © 2014, Juniper Networks, Inc.



WARNING: Do not look directly into a fiber-optic transceiver or into the ends of fiber-optic cables. Fiber-optic transceivers and fiber-optic cable connected to a transceiver emit laser light that can damage your eyes.

11. Insert the appropriate cables into the cable connector ports on each port module. Secure the cables so that they are not supporting their own weight. Place excess cable out of the way in a neatly coiled loop, using the cable management system. Placing fasteners on a loop helps to maintain its shape.



CAUTION: Do not let fiber-optic cable hang free from the connector. Do not allow fastened loops of cable to dangle, which stresses the cable at the fastening point.



CAUTION: Avoid bending fiber-optic cable beyond its minimum bend radius. An arc smaller than a few inches in diameter can damage the cable and cause problems that are difficult to diagnose.

12. Use one of the following methods to take the port module online:

    - Insert a pointed tool into the **ONLINE** pinhole on the front panel of the port module to press the button behind it. Hold the button down until the **OK/FAIL** LED at the opposite end of the front panel lights green steadily, in about 5 seconds.
    - Issue the following CLI command:

      `user@host>` **request chassis fpc-slot** *`slot-number`* **pic-slot** *`slot-number`* **online**

      For more information about the command, see *Junos OS System Basics and Services Command Reference* at www.juniper.net/techpubs/.



CAUTION: After the OK/FAIL LED turns green, wait at least 30 seconds before removing the port module again, removing a port module from a different slot, or inserting a port module in a different slot.

You can also verify that the port module is functioning correctly by issuing the **show chassis fpc** and **show chassis fpc pic-status** commands.

Related Documentation

- Connecting Network Cables to SRX5800 Services Gateway IOCs and Port Modules on page 91
- Maintaining MICs and Port Modules on the SRX5800 Services Gateway on page 127
- Troubleshooting SRX5800 Services Gateway MICs and Port Modules on page 140

Copyright © 2014, Juniper Networks, Inc.

Replacing SRX5800 Services Gateway MPCs

To replace an MPC, perform the following procedures:

1. Removing an SRX5800 Services Gateway MPC on page 181
2. Installing an SRX5800 Services Gateway MPC on page 183

Removing an SRX5800 Services Gateway MPC

An MPC installs vertically in the front of the services gateway. A fully configured MPC can weigh up to 18.35 lb (8.3 kg). Be prepared to accept its full weight.

To remove an MPC:

1. Have ready a replacement MPC or DPC blank panel and an antistatic mat for the MPC. Also have ready rubber safety caps for each MIC using an optical interface on the MPC that you are removing.
2. Attach an electrostatic discharge (ESD) grounding strap to your bare wrist, and connect the strap to one of the ESD points on the chassis.
3. Power off the services gateway.
4. Label the cables connected to each MIC on the MPC so that you can later reconnect the cables to the correct MICs.
5. Disconnect the cables from the MICs installed in the MPC.



WARNING: Do not look directly into a fiber-optic transceiver or into the ends of fiber-optic cables. Fiber-optic transceivers and fiber-optic cable connected to a transceiver emit laser light that can damage your eyes.



CAUTION: Do not leave a fiber-optic transceiver uncovered except when inserting or removing cable. The safety cap keeps the port clean and prevents accidental exposure to laser light.



CAUTION: Avoid bending fiber-optic cable beyond its minimum bend radius. An arc smaller than a few inches in diameter can damage the cable and cause problems that are difficult to diagnose.

6. If a MIC uses fiber-optic cable, immediately cover each transceiver and the end of each cable with a rubber safety cap.
7. Arrange the disconnected cables in the cable management brackets to prevent the cables from developing stress points.
8. Simultaneously turn both the ejector handles counterclockwise to unseat the MPC.

Copyright © 2014, Juniper Networks, Inc.

9. Grasp the handles, and slide the MPC straight out of the card cage halfway. See Figure 81 on page 182.

Figure 81: Removing an MPC

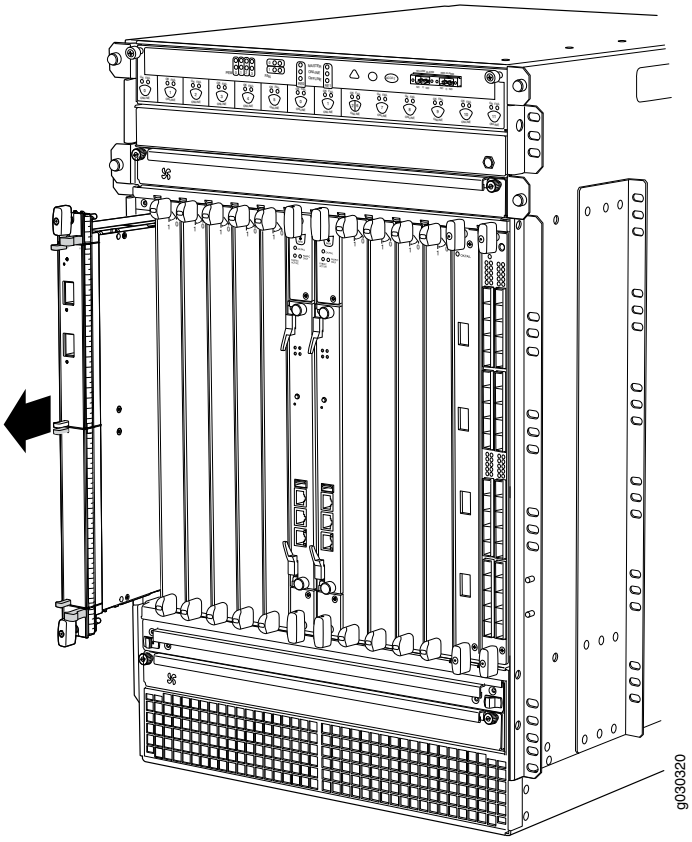

10. Place one hand around the front of the MPC (the MIC housing) and the other hand under it to support it. Slide the MPC completely out of the chassis, and place it on the antistatic mat or in the electrostatic bag.

CAUTION: The weight of the MPC is concentrated in the back end. Be prepared to accept the full weight—up to 18.35 lb (8.3 kg)—as you slide the MPC out of the chassis.

When the MPC is out of the chassis, do not hold it by the ejector handles, bus bars, or edge connectors. They cannot support its weight.

Do not stack MPCs on top of one another after removal. Place each one individually in an electrostatic bag or on its own antistatic mat on a flat, stable surface.

11. If necessary, remove each installed MIC from the MPC.

Copyright © 2014, Juniper Networks, Inc.

12. After you remove each MIC, immediately place it on an antistatic mat or in an electrostatic bag.
13. If you are not reinstalling an MPC into the emptied line card slots within a short time, install a blank DPC panel over each slot to maintain proper airflow in the card cage.

Installing an SRX5800 Services Gateway MPC

An MPC installs vertically in the front of the services gateway. A fully configured MPC can weigh up to 18.35 lb (8.3 kg). Be prepared to accept its full weight.

NOTE: If your services gateway is part of a chassis cluster, you may be able to install MPCs in the services gateways in the cluster without incurring downtime on your network. See "Installing MPCs and MICs in an Operating SRX5800 Services Gateway Chassis Cluster" on page 190 for more information.

To install an MPC:

1. Attach an electrostatic discharge (ESD) grounding strap to your bare wrist, and connect the strap to one of the ESD points on the chassis.
2. If you have not already done so, power off the services gateway.
3. Place the MPC on an antistatic mat.
4. Take each MIC to be installed in the replacement MPC out of its electrostatic bag, and identify the slot on the MPC where it will be connected.
5. Verify that each fiber-optic MIC has a rubber safety cap covering the MIC transceiver. If it does not, cover the transceiver with a safety cap.
6. Install each MIC into the appropriate slot on the MPC.
7. Locate the slot in the card cage in which you plan to install the MPC.
8. Orient the MPC so that the faceplate faces you.
9. Lift the MPC into place, and carefully align the sides of the MPC with the guides inside the card cage. See Figure 82 on page 184.

CAUTION: When the MPC is out of the chassis, do not hold it by the ejector handles, bus bars, or edge connectors. They cannot support its weight.

Copyright © 2014, Juniper Networks, Inc.

Figure 82: Installing an MPC

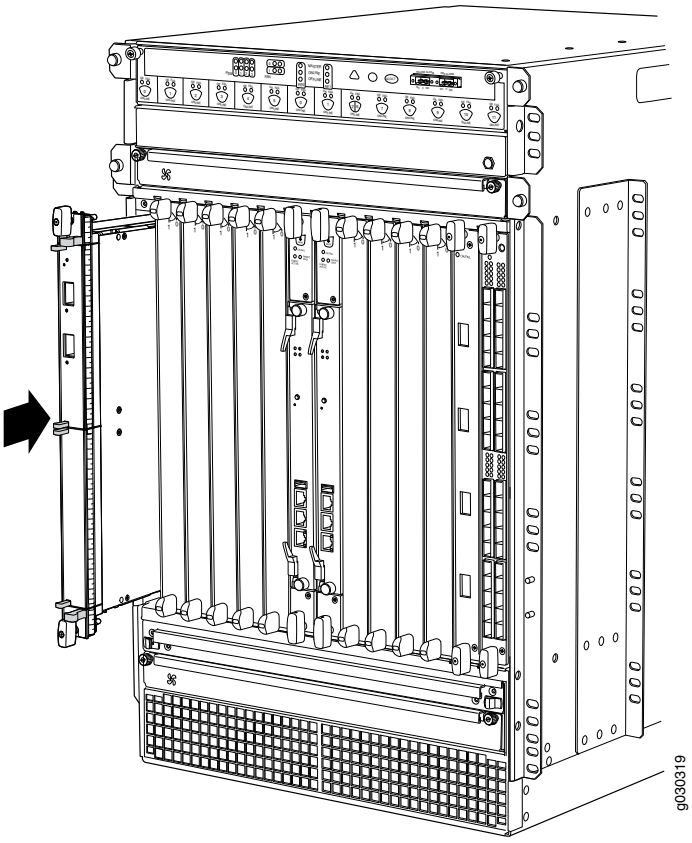

10. Slide the MPC all the way into the card cage until you feel resistance.
11. Grasp both ejector handles, and rotate them clockwise simultaneously until the MPC is fully seated.
12. If any of the MICs on the MPC connect to fiber-optic cable, remove the rubber safety cap from each transceiver and cable.

    WARNING: **Do not look directly into a fiber-optic transceiver or into the ends of fiber-optic cables. Fiber-optic transceivers and fiber-optic cable connected to a transceiver emit laser light that can damage your eyes.**

13. Insert the appropriate cable into the cable connector ports on each MIC on the MPC. Secure the cables so that they are not supporting their own weight. Place excess cable out of the way in a neatly coiled loop, using the cable management system. Placing fasteners on a loop helps to maintain its shape.

Copyright © 2014, Juniper Networks, Inc.



CAUTION: Do not let fiber-optic cable hang free from the connector. Do not allow fastened loops of cable to dangle, which stresses the cable at the fastening point.



CAUTION: Avoid bending fiber-optic cable beyond its minimum bend radius. An arc smaller than a few inches in diameter can damage the cable and cause problems that are difficult to diagnose.

14. Power on the services gateway. The OK LED on the power supply faceplate should blink, then light steadily.
15. Verify that the MPC is functioning correctly by issuing the **show chassis fpc** and **show chassis fpc pic-status** commands.

Related Documentation

- Replacing SRX5800 Services Gateway MICs on page 185
- Installing MPCs and MICs in an Operating SRX5800 Services Gateway Chassis Cluster on page 190
- Troubleshooting SRX5800 Services Gateway Interface Cards on page 139

Replacing SRX5800 Services Gateway MICs

To replace an MIC, perform the following procedures:

1. Removing an SRX5800 Services Gateway MIC on page 185
2. Installing an SRX5800 Services Gateway MIC on page 188

Removing an SRX5800 Services Gateway MIC

The MICs are located in the MPCs installed in the front of the services gateway. A MIC weighs less than 2 lb (0.9 kg).

To remove a MIC:

1. Place an electrostatic bag or antistatic mat on a flat, stable surface to receive the MIC. If the MIC connects to fiber-optic cable, have ready a rubber safety cap for each transceiver and cable.
2. Attach an electrostatic discharge (ESD) grounding strap to your bare wrist, and connect the strap to one of the ESD points on the chassis.
3. Power off the services gateway.
4. Label the cables connected to the MIC so that you can later reconnect each cable to the correct MIC.
5. Disconnect the cables from the MIC. If the MIC uses fiber-optic cable, immediately cover each transceiver and the end of each cable with a rubber safety cap.

Copyright © 2014, Juniper Networks, Inc.



WARNING: Do not look directly into a fiber-optic transceiver or into the ends of fiber-optic cables. Fiber-optic transceivers and fiber-optic cable connected to a transceiver emit laser light that can damage your eyes.



CAUTION: Do not leave a fiber-optic transceiver uncovered except when you are inserting or removing cable. The safety cap keeps the port clean and prevents accidental exposure to laser light.

6. Arrange the cable to prevent it from dislodging or developing stress points. Secure the cable so that it is not supporting its own weight as it hangs to the floor. Place excess cable out of the way in a neatly coiled loop.



CAUTION: Avoid bending fiber-optic cable beyond its minimum bend radius. An arc smaller than a few inches in diameter can damage the cable and cause problems that are difficult to diagnose.

7. On the MPC, pull the ejector knob that is adjacent to the MIC you are removing away from the MPC faceplate. The ejector knob is located between the MIC and the rotational knob that retains the MPC in the services gateway card cage. Pulling the ejector knob unseats the MIC from the MPC and partially ejects it. See Figure 83 on page 187.

Copyright © 2014, Juniper Networks, Inc.

Figure 83: Removing a MIC

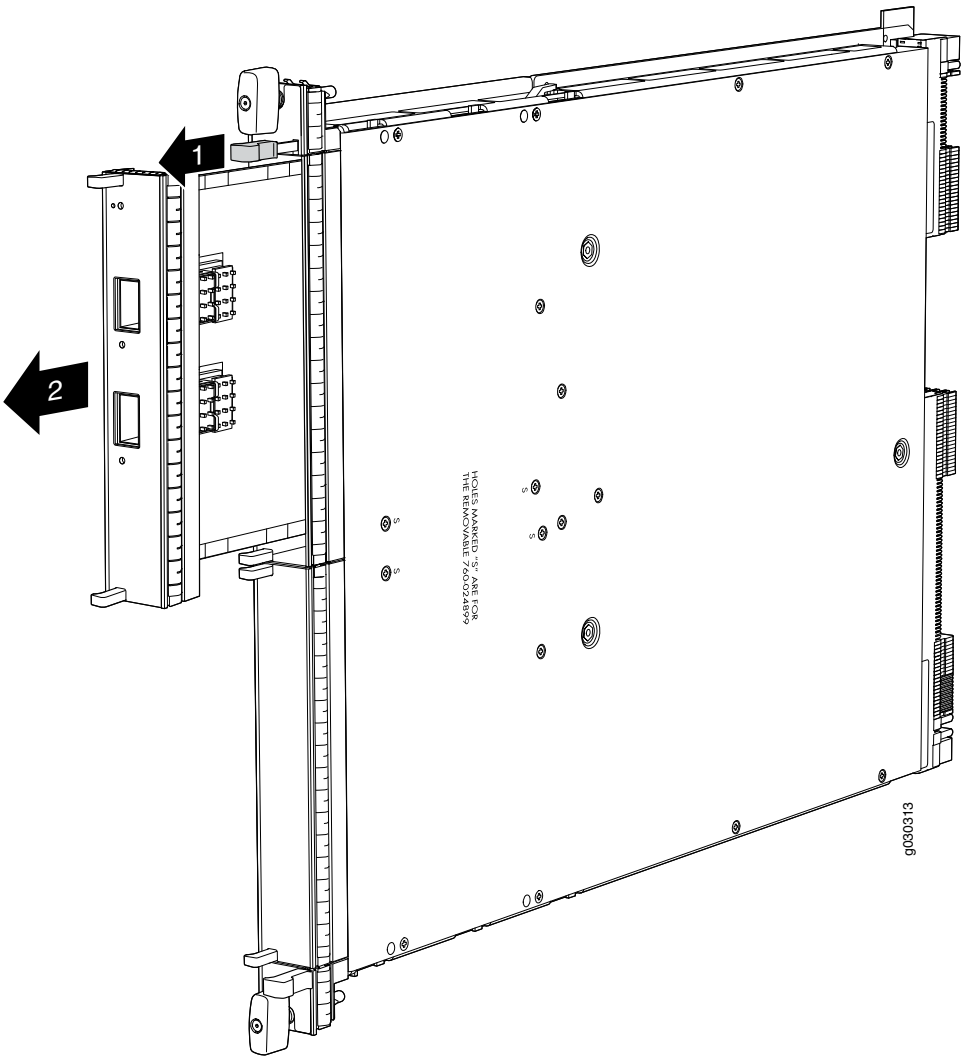

8. Grasp the handles on the MIC faceplate, and slide the MIC out of the MPC card carrier. Place it in the electrostatic bag or on the antistatic mat.
9. If you are not reinstalling a MIC into the emptied MIC slot within a short time, install a blank MIC panel over the slot to maintain proper airflow in the MPC card cage.

Copyright © 2014, Juniper Networks, Inc.

Installing an SRX5800 Services Gateway MIC

NOTE: If your services gateway is part of a chassis cluster, you may be able to install MICs in the services gateways in the cluster without incurring downtime on your network. See "Installing MPCs and MICs in an Operating SRX5800 Services Gateway Chassis Cluster" on page 190 for more information.

To install a MIC:

1. Attach an electrostatic discharge (ESD) grounding strap to your bare wrist, and connect the strap to one of the ESD points on the chassis.
2. If you have not already done so, power off the services gateway.
3. If the MIC uses fiber-optic cable, verify that a rubber safety cap is over each transceiver on the faceplate. Install a cap if necessary.
4. On the MPC, pull the ejector knob that is adjacent to the MIC you are installing away from the MPC faceplate. The ejector knob is located between the MIC and the rotational knob that retains the MPC in the services gateway card cage. See Figure 84 on page 189.

Copyright © 2014, Juniper Networks, Inc.

Figure 84: Installing a MIC

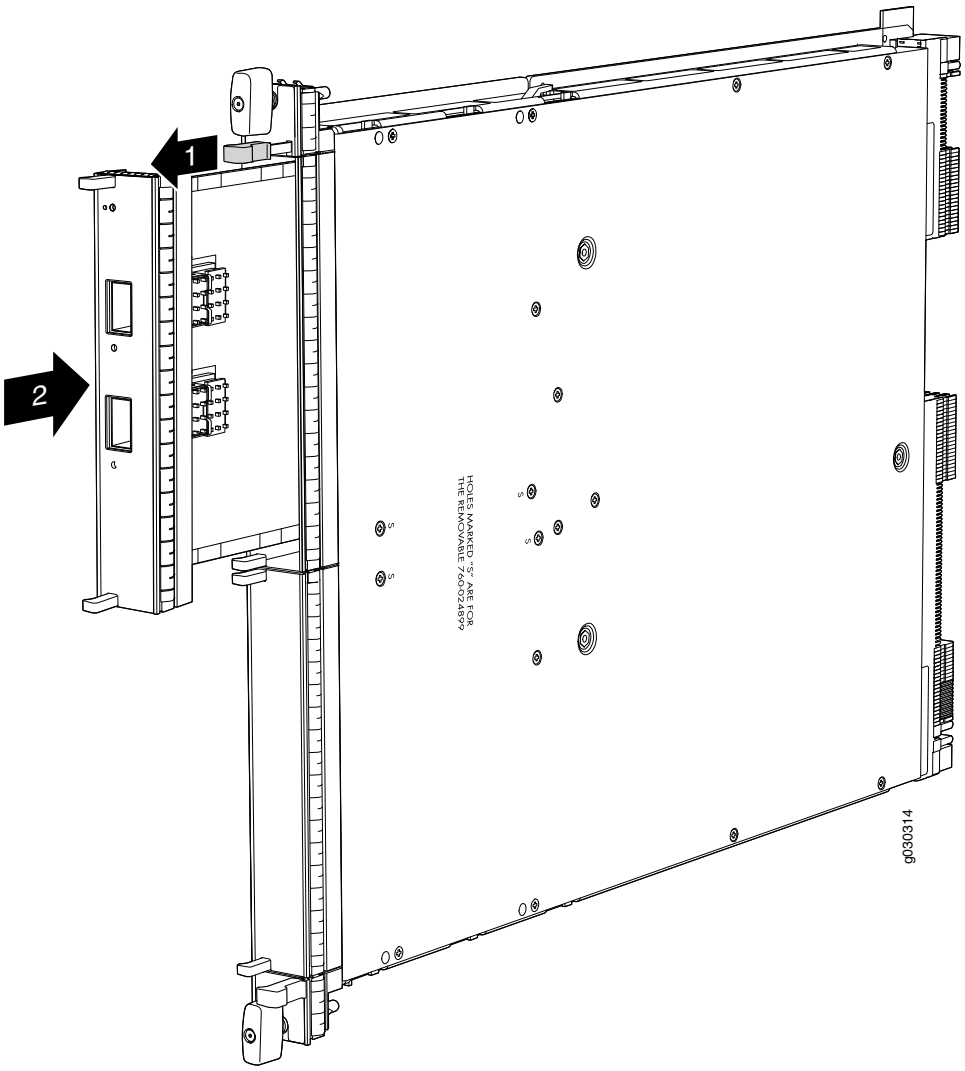

5. Align the rear of the MIC with the guides located at the corners of the MIC slot.
6. Slide the MIC into the MPC until it is firmly seated in the MPC. The ejector knob will automatically move in towards the faceplate to lock the MIC in position as it seats.

   If the MIC does not seat properly in the slot, pull the ejector knob all the way out and try again to seat the MIC. The MIC will not seat properly unless the ejector knob is all the way when you start to insert the MIC.

   CAUTION: **Slide the MIC straight into the slot to avoid damaging the components on the MIC.**

7. After the MIC is seated in its slot, verify that the ejector knob is engaged by pushing it all the way in toward the MPC faceplate.

Copyright © 2014, Juniper Networks, Inc.

8. If the MIC uses fiber-optic cable, remove the rubber safety cap from each transceiver and the end of each cable.



WARNING: Do not look directly into a fiber-optic transceiver or into the ends of fiber-optic cables. Fiber-optic transceivers and fiber-optic cable connected to a transceiver emit laser light that can damage your eyes.



CAUTION: Do not leave a fiber-optic transceiver uncovered except when you are inserting or removing cable. The safety cap keeps the port clean and prevents accidental exposure to laser light.

9. Insert the appropriate cables into the cable connectors on the MIC.
10. Arrange each cable to prevent the cable from dislodging or developing stress points. Secure the cable so that it is not supporting its own weight as it hangs to the floor. Place excess cable out of the way in a neatly coiled loop.



CAUTION: Do not let fiber-optic cable hang free from the connector. Do not allow fastened loops of cable to dangle, which stresses the cable at the fastening point.



CAUTION: Avoid bending fiber-optic cable beyond its minimum bend radius. An arc smaller than a few inches in diameter can damage the cable and cause problems that are difficult to diagnose.

11. Power on the services gateway. The OK LED on the power supply faceplate should blink, then light steadily.
12. Verify that the MPC and MICs are functioning correctly by issuing the **show chassis fpc** and **show chassis fpc pic-status** commands.

Related Documentation

- Replacing SRX5800 Services Gateway MPCs on page 181
- Installing MPCs and MICs in an Operating SRX5800 Services Gateway Chassis Cluster on page 190
- Troubleshooting SRX5800 Services Gateway Interface Cards on page 139

Installing MPCs and MICs in an Operating SRX5800 Services Gateway Chassis Cluster

If your services gateway is part of a chassis cluster, you can install MPCs in the services gateways in the cluster without incurring downtime on your network.

Such an installation meet the following conditions:

Copyright © 2014, Juniper Networks, Inc.

- If the chassis cluster is operating in active-active mode, you must transition it to active-passive mode before using this procedure. You transition the cluster to active-passive mode by making one node primary for all redundancy groups.
- Both of the services gateways in the cluster must be running Junos OS Release 12.1X45-D11 or later.

If your installation does not meet these criteria, use the procedure in "Installing an SRX5800 Services Gateway MPC" on page 183 to install MPCs in your services gateway.



NOTE: During this installation procedure, you must shut down both devices, one at a time. During the period when one device is shut down, the remaining device operates without a backup. If that remaining device fails for any reason, you incur network downtime until you restart at least one of the devices.

To install MPCs in an operating SRX5800 Services Gateway cluster without incurring downtime:

1. Use the console port on the Routing Engine to establish a CLI session with one of the devices in the cluster.
2. Issue the **show chassis cluster status** command to determine which services gateway is currently primary, and which services gateway is secondary, within the cluster.

   In the example below, all redundancy groups are primary on node 0, and secondary on node 1:

```
admin@cluster> show chassis cluster status
Cluster ID: 1
Node            Priority      Status   Preempt  Manual failover

Redundancy group: 0 , Failover count: 5
  node0           1       primary      no     no
  node1           100     secondary    no     no

Redundancy group: 1 , Failover count: 1
  node0           200     primary      no     no
  node1           100     secondary    no     no

Redundancy group: 2 , Failover count: 1
  node0           200     primary      no     no
  node1           100     secondary    no     no

Redundancy group: 3 , Failover count: 1
  node0           100     primary      no     no
  node1           200     secondary    no     no

Redundancy group: 4 , Failover count: 1
  node0           200     primary      no     no
  node1           100     secondary    no     no
```

Copyright © 2014, Juniper Networks, Inc.

3. If the device with which you established the CLI session in Step 2 is not the secondary node in the cluster, use the console port on the device that is the secondary node to establish a CLI session.
4. In the CLI session for the secondary services gateway, issue the **request system power off** command to shut down the services gateway.
5. Wait for the secondary services gateway to completely shut down.
6. Install the new MPCs in the powered-off services gateway using the procedure in "Installing an SRX5800 Services Gateway MPC" on page 183.
7. Install MICs in the MPCs in the powered-off services gateway using the procedure in "Installing an SRX5800 Services Gateway MIC" on page 188.
8. Power on the secondary services gateway and wait for it to finish starting.
9. Reestablish the CLI session with the secondary node device.
10. Issue the **show chassis fpc pic-status** command to make sure that all of the cards in the secondary node chassis are back online.

    In the example below, the second column shows that all of the cards are online.

```
regress@mland00> show chassis fpc pic-status
node0:
--------------------------------------------------------------------------
Slot 2  Online      SRX5k IOC II
  PIC 0  Online     2x 40GE QSFP+
  PIC 2  Online     10x 10GE SFP+
Slot 4  Online      SRX5k SPC II
  PIC 0  Online     SPU Cp
  PIC 1 Online      SPU Flow
  PIC 2  Online     SPU Flow
  PIC 3  Online     SPU Flow
Slot 5  Online      SRX5k DPC 4X 10GE
  PIC 0  Online     1x 10GE(LAN/WAN) RichQ
  PIC 1 Online      1x 10GE(LAN/WAN) RichQ
  PIC 2  Online     1x 10GE(LAN/WAN) RichQ
  PIC 3  Online     1x 10GE(LAN/WAN) RichQ

node1:
--------------------------------------------------------------------------
Slot 2  Online      SRX5k IOC II
  PIC 0  Online     2x 40GE QSFP+
  PIC 2  Online     10x 10GE SFP+
Slot 4  Online      SRX5k SPC II
  PIC 0  Online     SPU Cp
  PIC 1 Online      SPU Flow
  PIC 2  Online     SPU Flow
  PIC 3  Online     SPU Flow
Slot 5  Online      SRX5k DPC 4X 10GE
  PIC 0  Online     1x 10GE(LAN/WAN) RichQ
  PIC 1 Online      1x 10GE(LAN/WAN) RichQ
  PIC 2  Online     1x 10GE(LAN/WAN) RichQ
  PIC 3  Online     1x 10GE(LAN/WAN) RichQ
```


Copyright © 2014, Juniper Networks, Inc.

11. Issue the **show chassis cluster status** command to make sure that the priority for all redundancy groups is greater than zero.
12. Use the console port on the device that is the primary node to establish a CLI session.
13. In the CLI session for the primary node device, issue the **request chassis cluster failover** command to fail over each redundancy group that has an ID number greater than zero.

    For example:

    ```
    admin@cluster> request chassis cluster failover redundancy-group 1 node 1
    ```

14. In the CLI session for the primary node device, issue the **request system power off** command to shut down the services gateway. This action causes redundancy group 0 to fail over onto the other services gateway, making it the active node in the cluster.
15. Repeat Step 6 to install MPCs in the powered-off services gateway.
16. Repeat Step 7 to install MICs in the MPCs in the powered-off services gateway.
17. Power on the services gateway and wait for it to finish starting.
18. Issue the **show chassis fpc pic-status** command on each node to confirm that all cards are online and both services gateways are operating correctly.
19. Issue the **show chassis cluster status** command to make sure that the priority for all redundancy groups is greater than zero.

Related Documentation

- Installing an SRX5800 Services Gateway MPC on page 183
- Installing an SRX5800 Services Gateway MIC on page 188

Replacing an SRX5800 Services Gateway Network Interface Cable

To replace a network interface cable connected to an IOC, port module, or MIC, perform the following procedures:

1. Removing an SRX5800 Services Gateway Network Interface Cable on page 193
2. Installing an SRX5800 Services Gateway Network Interface Cable on page 194

Removing an SRX5800 Services Gateway Network Interface Cable

Removing and installing network interface cables does not affect services gateway function, except that the component does not receive or transmit data while its cable is disconnected.

To remove a fiber-optic cable from a network interface on an IOC, port module, or MIC:

1. If the component connects to fiber-optic cable, have ready a rubber safety cap for each cable and transceiver.
2. If removing all cables connected to the component, use one of the following methods to take the component offline:

Copyright © 2014, Juniper Networks, Inc.

- To take a port module offline :
  - Press the online/offline button on the port module. Use a narrow-ended tool that fits inside the opening that leads to the button. Press and hold the button until the port module LED goes out (about 5 seconds).
  - Issue the following CLI command:

    `user@host>` **request chassis pic fpc-slot** *`fpc-slot`* **pic-slot** *`port-module-slot`* **offline**

    For more information about the command, see *Junos OS System Basics and Services Command Reference* at www.juniper.net/techpubs/.
- To take an interface card offline :
  - Press and hold the corresponding online button on the craft interface. The green **OK** LED next to the button begins to blink. Hold the button down until the LED goes off.
  - Issue the following CLI command:

    `user@host>`**request chassis fpc slot *slot-number* offline**

    For more information about the command, see *Junos OS System Basics and Services Command Reference* at www.juniper.net/techpubs/.

3. Unplug the cable from the cable connector port. If the network interface uses fiber-optic cable, immediately cover each transceiver and the end of each cable with a rubber safety cap.

   

   WARNING: Do not look directly into a fiber-optic transceiver or into the ends of fiber-optic cables. Fiber-optic transceivers and fiber-optic cable connected to a transceiver emit laser light that can damage your eyes.

   

   CAUTION: Do not leave a fiber-optic transceiver uncovered except when you are inserting or removing cable. The safety cap keeps the port clean and prevents accidental exposure to laser light.

4. Remove the cable from the cable manager and detach it from the destination port.

Installing an SRX5800 Services Gateway Network Interface Cable

To install a fiber-optic cable on a network interface on an IOC, port module, or MIC:

1. Have ready a length of the type of cable used by the component.
2. If the cable connector port is covered by a rubber safety plug, remove the plug.

   

   WARNING: Do not look directly into a fiber-optic transceiver or into the ends of fiber-optic cables. Fiber-optic transceivers and fiber-optic cable connected to a transceiver emit laser light that can damage your eyes.

Copyright © 2014, Juniper Networks, Inc.



CAUTION: Do not leave a fiber-optic transceiver uncovered except when you are inserting or removing cable. The safety cap keeps the port clean and prevents accidental exposure to laser light.

3. Insert the cable connector into the cable connector port on the component faceplate.
4. Arrange the cable in the cable manager to prevent it from dislodging or developing stress points. Secure the cable so that it is not supporting its own weight as it hangs to the floor. Place excess cable out of the way in a neatly coiled loop. Placing fasteners on the loop helps to maintain its shape.



CAUTION: Avoid bending fiber-optic cable beyond its minimum bend radius. An arc smaller than a few inches in diameter can damage the cable and cause problems that are difficult to diagnose.



CAUTION: Do not let fiber-optic cable hang free from the connector. Do not allow fastened loops of cable to dangle, which stresses the cable at the fastening point.

5. Insert the other end of the cable into the destination port.
6. Repeat the previous steps for any additional cables.
7. If the component is offline (its failure indicator LED is lit), use one of the following methods to bring it online.
   - To bring an IOC or MPC online:
     - Press and hold the corresponding IOC or MPC online button on the craft interface until the green **OK** LED next to the button lights steadily, in about 5 seconds.
     - Issue the following CLI command:

       `user@host>` **request chassis fpc slot** *slot-number* **online**

       For more information about the command, see *Junos OS System Basics and Services Command Reference* at www.juniper.net/techpubs/.
   - To bring a port module online:
     - Press the port module online button until the PIC LED lights green. Use a narrow-ended tool that fits inside the opening that leads to the button.
     - Issue the following CLI command:

       `user@host>` **request chassis pic fpc-slot** *fpc-slot* **pic-slot** *pic-slot* **online**

       For more information about the command, see *Junos OS System Basics and Services Command Reference* at www.juniper.net/techpubs/.

Copyright © 2014, Juniper Networks, Inc.

The normal functioning indicator LED confirms that the component is online. You can also verify correct IOC functioning by issuing the **show chassis fpc** command or correct PIC functioning by issuing the **show chassis fpc pic-status** command.

Related Documentation

- Connecting Network Cables to SRX5800 Services Gateway IOCs and Port Modules on page 91

Replacing SRX5800 Services Gateway SPCs

To replace an SPC, perform the following procedures:

1. Removing an SRX5800 Services Gateway SPC on page 196
2. Installing an SRX5800 Services Gateway SPC on page 198

Removing an SRX5800 Services Gateway SPC

An SPC weighs up to 18.3 lb (8.3 kg). Be prepared to accept its full weight.

To remove an SPC (see Figure 85 on page 198):

1. Have ready a replacement SPC or blank panel and an antistatic mat for the SPC. Also have ready rubber safety caps for each SPC you are removing that uses an optical interface.
2. Attach an ESD grounding strap to your bare wrist, and connect the strap to one of the ESD points on the chassis.
3. Power off the services gateway.
4. Label the cables connected to each port on the SPC so that you can later reconnect the cables to the correct ports.
5. Disconnect the cables from the SPC. If the SPC uses fiber-optic cable, immediately cover each transceiver and the end of each cable with a rubber safety cap. Arrange the disconnected cables in the cable management system to prevent the cables from developing stress points.



WARNING: **Do not look directly into a fiber-optic transceiver or into the ends of fiber-optic cables. Fiber-optic transceivers and fiber-optic cable connected to a transceiver emit laser light that can damage your eyes.**



CAUTION: **Do not leave a fiber-optic transceiver uncovered except when you are inserting or removing cable. The safety cap keeps the port clean and prevents accidental exposure to laser light.**

Copyright © 2014, Juniper Networks, Inc.



CAUTION: Avoid bending fiber-optic cable beyond its minimum bend radius. An arc smaller than a few inches in diameter can damage the cable and cause problems that are difficult to diagnose.



CAUTION: Do not let fiber-optic cable hang free from the connector. Do not allow fastened loops of cable to dangle, which stresses the cable at the fastening point.

6. Simultaneously turn both of the ejector handles counterclockwise to unseat the SPC.
7. Grasp the handles and slide the SPC straight out of the card cage halfway.
8. Place one hand around the front of the SPC and the other hand under it to support it. Slide the SPC completely out of the chassis, and place it on the antistatic mat or in the electrostatic bag.



CAUTION: The weight of the SPC is concentrated in the back end. Be prepared to accept the full weight—up to 18.3 lb (8.3 kg)—as you slide the SPC out of the chassis.

When the SPC is out of the chassis, do not hold it by the ejector handles, bus bars, or edge connectors. They cannot support its weight.

Do not stack SPCs on top of one another after removal. Place each one individually in an electrostatic bag or on its own antistatic mat on a flat, stable surface.

9. If you are not reinstalling an SPC into the empty slot within a short time, install a blank panel over the slot to maintain proper airflow in the card cage.

Copyright © 2014, Juniper Networks, Inc.

Figure 85: Removing an SPC

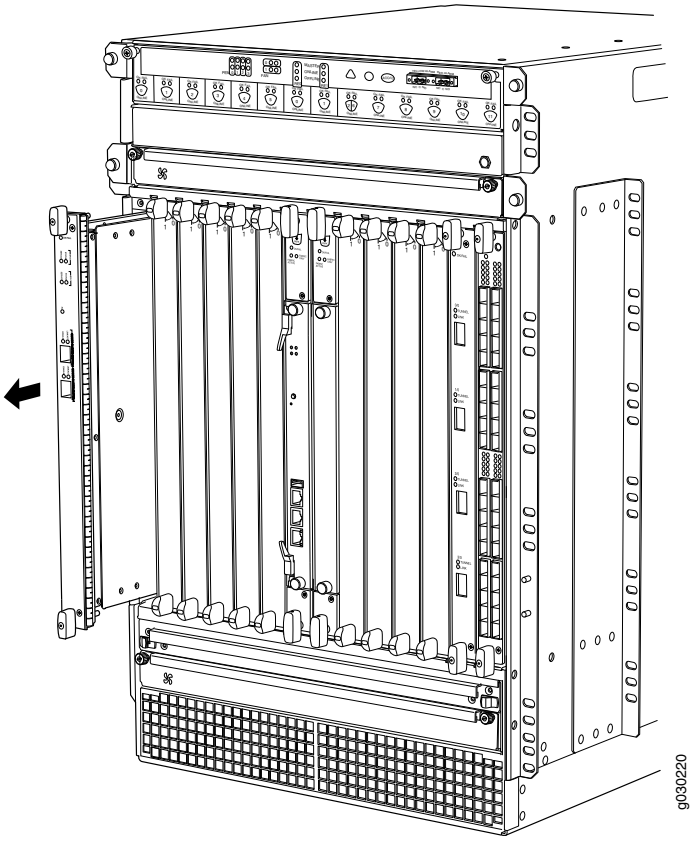

Installing an SRX5800 Services Gateway SPC

To install an SPC (see Figure 86 on page 200):

1. Attach an ESD grounding strap to your bare wrist, and connect the strap to one of the ESD points on the chassis.
2. If you have not already done so, power off the device.
3. Place the SPC on an antistatic mat or remove it from its electrostatic bag.
4. Identify the slot on the services gateway where it will be installed.
5. Verify that each fiber-optic transceiver is covered with a rubber safety cap. If it does not, cover the transceiver with a safety cap.
6. Orient the SPC so that the faceplate faces you, the text on the card is right-side up, and the EMI strip is on the right-hand side.
7. Lift the SPC into place and carefully align first the bottom and then the top of the card with the guides inside the card cage.
8. Slide the SPC all the way into the card cage until you feel resistance.
9. Grasp both ejector handles and rotate them clockwise simultaneously until the SPC is fully seated.

Copyright © 2014, Juniper Networks, Inc.

10. If the SPC uses fiber-optic cable, remove the rubber safety cap from each transceiver and cable.



WARNING: Do not look directly into a fiber-optic transceiver or into the ends of fiber-optic cables. Fiber-optic transceivers and fiber-optic cable connected to a transceiver emit laser light that can damage your eyes.

11. Insert the appropriate cables into the cable connector ports on each SPC (see Figure 87 on page 201). Secure the cables so that they are not supporting their own weight. Place excess cable out of the way in a neatly coiled loop, using the cable management system. Placing fasteners on a loop helps to maintain its shape.



CAUTION: Do not let fiber-optic cable hang free from the connector. Do not allow fastened loops of cable to dangle, which stresses the cable at the fastening point.



CAUTION: Avoid bending fiber-optic cable beyond its minimum bend radius. An arc smaller than a few inches in diameter can damage the cable and cause problems that are difficult to diagnose.

12. Power on the services gateway.
13. Verify that the SPC is functioning correctly by issuing the **show chassis fpc** and **show chassis fpc pic-status** commands.

Copyright © 2014, Juniper Networks, Inc.

Figure 86: Installing an SPC

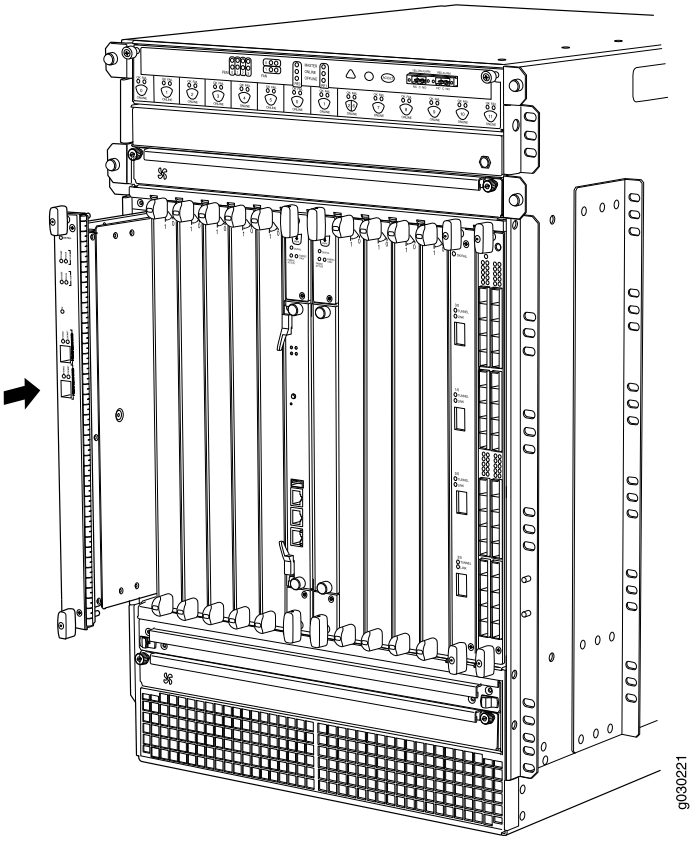

Copyright © 2014, Juniper Networks, Inc.

Figure 87: Attaching a Cable to an SPC

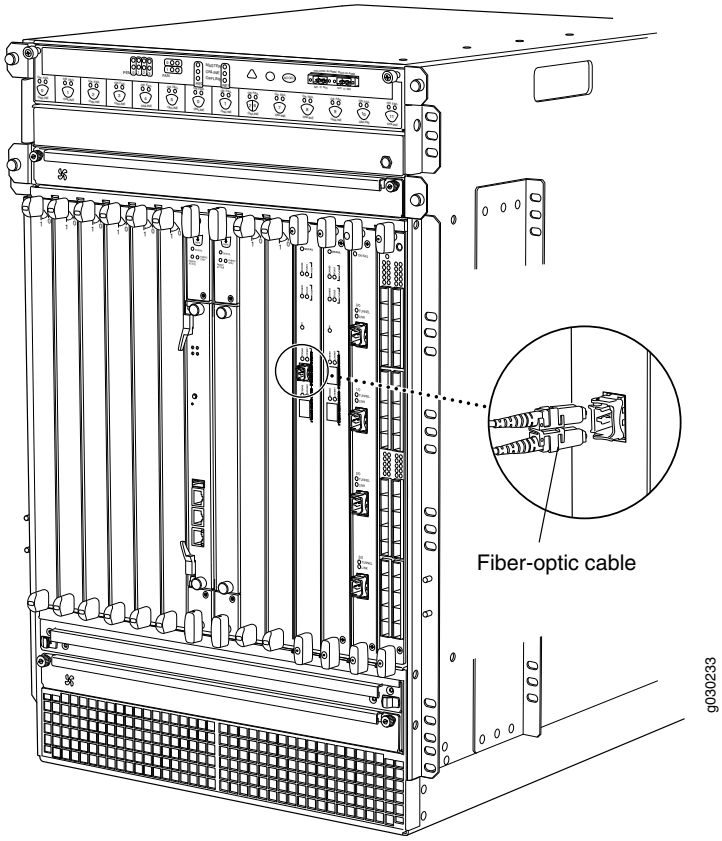

Copyright © 2014, Juniper Networks, Inc.

NOTE: To install additional SPCs in a services gateway that is part of a chassis cluster, it must meet the following conditions.

- Each services gateway must already have at least two SPCs installed in it.
- To add first-generation SRX5K-SPC-2-10-40 SPCs, both of the services gateways in the cluster must be running Junos OS Release 11.4R2S1, 12.1R2, or later.
- To add next-generation SRX5K-SPC-4-15-320 SPCs, both of the services gateways in the cluster must be running Junos OS Release 12.1X44-D10, or later.
- You must install SPCs of the same type and in the same slots in both of the services gateways in the cluster. Both services gateways in the cluster must end up with the same physical configuration of SPCs.
- If you are only adding first-generation SRX5K-SPC-2-10-40 SPCs to the chassis, you must install them so that the new SPCs are not the SPCs with the lowest-numbered slots in the chassis. For example, if the chassis already has two SPCs with one SPC each in slots 2 and 3, you cannot install additional SPCs in slots 0 or 1 using this procedure.
- If you are adding next-generation SRX5K-SPC-4-15-320 SPCs to the chassis, you must install the new SPCs so that a next-generation SRX5K-SPC-4-15-320 SPC is the SPC in the original lowest-numbered slot. For example, if the chassis already has two first-generation SPCs installed in slots 2 and 3, you cannot install SRX5K-SPC-4-15-320 SPCs in slots 0 or 1. You will need to make sure that an SRX5K-SPC-4-15-320 SPC is installed in the slot providing center point (CP) functionality (in this case, slot 2). This ensures that the CP functionality is performed by an SRX5K-SPC-4-15-320 SPC.
- If you are adding next-generation SRX5K-SPC-4-15-320 SPCs to the services gateways, both services gateways must already be equipped with high-capacity power supplies and fan trays, and the high-capacity air filter. See "Upgrading an SRX5800 Services Gateway from Standard-Capacity to High-Capacity Power Supplies" on page 208 for more information.

During this installation procedure, you must shut down both devices, one at a time.

Related Documentation

- Maintaining Interface Cards and SPCs on the SRX5600 Services Gateway on page 125
- Troubleshooting SRX5800 Services Gateway SPCs on page 141
- Replacing SPCs in an Operating SRX5800 Services Gateway Chassis Cluster on page 203

Copyright © 2014, Juniper Networks, Inc.

Replacing SPCs in an Operating SRX5800 Services Gateway Chassis Cluster

If your SRX5800 Services Gateway is part of an operating chassis cluster, you can replace SPCs without incurring downtime on your network. You can also replace first-generation SPCs with next-generation SRX5K-SPC-4-15-320 SPCs.

To replace SPCs in a services gateway that is part of a chassis cluster, it must meet the following conditions:

- Each services gateway must already have at least two SPCs installed in it.
- If the chassis cluster is operating in active-active mode, you must transition it to active-passive mode before using this procedure. You transition the cluster to active-passive mode by making one node primary for all redundancy groups.
- To add first-generation SRX5K-SPC-2-10-40 SPCs, both of the services gateways in the cluster must be running Junos OS Release 11.4R2S1, 12.1R2, or later.
- To add next-generation SRX5K-SPC-4-15-320 SPCs, both of the services gateways in the cluster must be running Junos OS Release 12.1X44-D10, or later.
- You must install SPCs of the same type and in the same slots in both of the services gateways in the cluster. Both services gateways in the cluster must end up with the same physical configuration of SPCs.
- If you are replacing an existing first-generation SRX5K-SPC-2-10-40 SPC with a next-generation SRX5K-SPC-4-15-320 SPC, you must install the new SPC so that the next-generation SRX5K-SPC-4-15-320 SPC is the SPC with the lowest-numbered slot. For example, if the chassis has SPCs installed in slots 2 and 3, then you must replace the SPC in slot 2 first. This ensures that the center point (CP) functionality is performed by an SRX5K-SPC-4-15-320 SPC.
- If you are adding next-generation SRX5K-SPC-4-15-320 SPCs to the services gateways, both services gateways must already be equipped with high-capacity power supplies and fan trays, and the high-capacity air filter. See "Upgrading an SRX5800 Services Gateway from Standard-Capacity to High-Capacity Power Supplies" on page 208 for more information.

To replace SPCs in an SRX5800 Services Gateway cluster without incurring downtime:

1. Use the console port on the Routing Engine to establish a CLI session with one of the devices in the cluster.
2. Use the **show chassis cluster status** command to determine which services gateway is currently primary, and which services gateway is secondary, within the cluster.

   In the example below, all redundancy groups are primary on node 0, and secondary on node 1:

```
admin@cluster> show chassis cluster status
Cluster ID: 1
Node            Priority      Status   Preempt  Manual failover

Redundancy group: 0 , Failover count: 5
```

Copyright © 2014, Juniper Networks, Inc.

```
    node0            1        primary      no      no
    node1            100      secondary    no      no

Redundancy group: 1 , Failover count: 1
    node0            200      primary      no      no
    node1            100      secondary    no      no

Redundancy group: 2 , Failover count: 1
    node0            200      primary      no      no
    node1            100      secondary    no      no

Redundancy group: 3 , Failover count: 1
    node0            100      primary      no      no
    node1            200      secondary    no      no

Redundancy group: 4 , Failover count: 1
    node0            200      primary      no      no
    node1            100      secondary    no      no
```

3. If the device with which you established the CLI session in Step 2 is not the secondary node in the cluster, use the console port on the device that is the secondary node to establish a CLI session.
4. In the CLI session for the secondary services gateway, use the **request system power off** command to shut down the services gateway.
5. Wait for the secondary services gateway to completely shut down.
6. If you are replacing first-generation SPCs with SRX5K-SPC-4-15-320 SPCs, use the procedure in "Removing an SRX5800 Services Gateway SPC" on page 196 to remove the SPCs you are replacing from the powered-off services gateway.
7. Install the new SPC or SPCs in the powered-off services gateway using the procedure in "Installing an SRX5800 Services Gateway SPC" on page 198.
8. Power on the secondary services gateway and wait for it to finish starting.
9. Reestablish the CLI session with the secondary node device.
10. Use the **show chassis fpc pic-status** command to make sure that all of the cards in the secondary node chassis are back online.

    In the example below, the second column shows that all of the cards are online. This example is for an SRX3400 Services Gateway; for other devices the output is similar.

```
admin@cluster> show chassis fpc pic-status
node0:
--------------------------------------------------------------------------
Slot 0   Online      SRX3k SFB 12GE
  PIC 0  Online      8x 1GE-TX 4x 1GE-SFP
Slot 1   Online      SRX3k SPC
  PIC 0  Online      SPU Cp-Flow
Slot 2   Online      SRX3k SPC
  PIC 0  Online      SPU Flow
Slot 3   Online      SRX3k 2x10GE XFP
  PIC 0  Online      2x 10GE-XFP
Slot 5   Online      SRX3k SPC
  PIC 0  Online      SPU Flow
```

 Copyright © 2014, Juniper Networks, Inc.

```
Slot 6  Online      SRX3k NPC
 PIC 0  Online      NPC PIC

node1:
--------------------------------------------------------------------------
Slot 0  Online      SRX3k SFB 12GE
 PIC 0  Online      8x 1GE-TX 4x 1GE-SFP
Slot 1  Online      SRX3k SPC
 PIC 0  Online      SPU Cp-Flow
Slot 2  Online      SRX3k SPC
 PIC 0  Online      SPU Flow
Slot 3  Online      SRX3k 2x10GE XFP
 PIC 0  Online      2x 10GE-XFP
Slot 5  Online      SRX3k SPC
 PIC 0  Online      SPU Flow
Slot 6  Online      SRX3k NPC
 PIC 0  Online      NPC PIC

{secondary:node1}
```

11. Use the **show chassis cluster status** command to make sure that the priority for all redundancy groups is greater than zero.
12. Use the console port on the device that is the primary node to establish a CLI session.
13. In the CLI session for the primary node device, use the **request chassis cluster failover** command to fail over each redundancy group that has an ID number greater than zero.

    For example:

    ```
    admin@cluster> request chassis cluster failover redundancy-group 1 node 1

    admin@cluster> request chassis cluster failover redundancy-group 2 node 1

    admin@cluster> request chassis cluster failover redundancy-group 3 node 1

    admin@cluster> request chassis cluster failover redundancy-group 4 node 1
    ```

14. In the CLI session for the primary node device, use the **request system power off** command to shut down the services gateway. This action causes redundancy group 0 to fail over onto the other services gateway, making it the active node in the cluster.
15. Repeat Step 6 and Step 7 to replace or install SPCs in the powered-off services gateway.
16. Power on the services gateway and wait for it to finish starting.
17. Use the **show chassis fpc pic-status** command on each node to confirm that all cards are online and both services gateways are operating correctly.
18. Use the **show chassis cluster status** command to make sure that the priority for all redundancy groups is greater than zero.

Related Documentation

- Installing an SRX5800 Services Gateway SPC on page 198

Copyright © 2014, Juniper Networks, Inc.

- Removing an SRX5800 Services Gateway SPC on page 196

Replacing SRX5800 Services Gateway XFP and SFP Transceivers

To replace an XFP or SFP transceiver, perform the following procedures:

1. Removing an SRX5800 Services Gateway SFP or XFP Transceiver on page 206
2. Installing an SRX5800 Services Gateway SFP or XFP Transceiver on page 207

Removing an SRX5800 Services Gateway SFP or XFP Transceiver

Transceivers are installed in a MIC or SPC. Transceivers are hot-insertable and hot-removable. Removing a transceiver does not interrupt the functioning of the card, but the removed transceiver no longer receives or transmits data.

To remove a transceiver (see Figure 88 on page 207):

1. Have ready a replacement transceiver or a transceiver slot plug, an antistatic mat, and a rubber safety cap for the transceiver.
2. Attach an electrostatic discharge (ESD) grounding strap to your bare wrist, and connect the strap to one of the ESD points on the chassis.
3. Label the cables connected to the transceiver so that you can reconnect them correctly later.

   WARNING: **Do not look directly into a fiber-optic transceiver or into the ends of fiber-optic cables. Fiber-optic transceivers and fiber-optic cable connected to a transceiver emit laser light that can damage your eyes.**

4. Remove the cable connector from the transceiver.
5. Carefully arrange the disconnected cable in the cable manager to prevent the cable from developing stress points.

   CAUTION: **Avoid bending fiber-optic cable beyond its minimum bend radius. An arc smaller than a few inches in diameter can damage the cable and cause problems that are difficult to diagnose.**

6. Pull the ejector handle out from the transceiver to unlock the transceiver.

   CAUTION: **Make sure that you open the ejector handle completely until you hear it click. This prevents damage to the transceiver.**

   Use needlenose pliers to pull the ejector handle out from the transceiver.
7. Grasp the transceiver ejector handle and pull the transceiver approximately 0.5 in. (1.3 cm) out of the card.

Copyright © 2014, Juniper Networks, Inc.

8. Using your fingers, grasp the body of the transceiver and pull it the rest of the way out of the card.

Figure 88: Removing a Transceiver

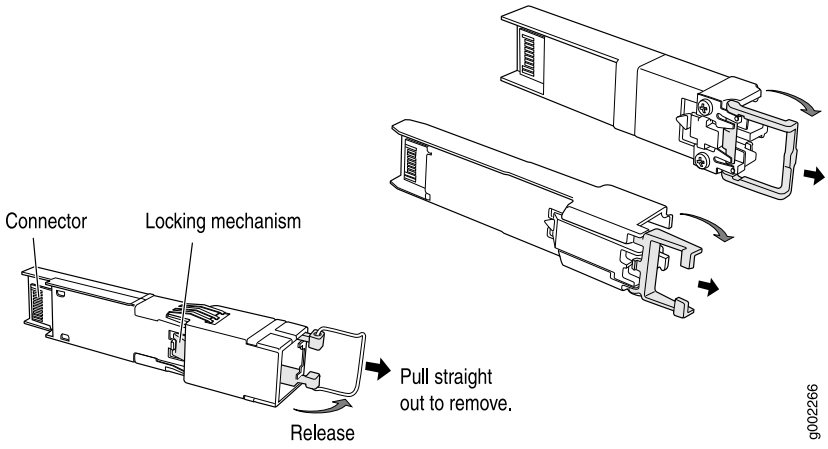

9. Place a rubber safety cap over the transceiver.
10. Place the removed transceiver on an antistatic mat or in an electrostatic bag.

CAUTION: After removing a transceiver from the card, wait at least 30 seconds before reinserting it or inserting a transceiver into a different socket.

Installing an SRX5800 Services Gateway SFP or XFP Transceiver

Transceivers that are installed in an MIC or SPC. Transceivers are hot-insertable and hot-removable. Removing a transceiver does not interrupt the functioning of the card, but the removed transceiver no longer receives or transmits data.

NOTE: We strongly recommend the use of Juniper Networks transceivers. We cannot guarantee correct operation if other transceivers are used. The transceiver type can be different in each port, as long as a supported part number is used.

To install a transceiver:

1. Attach an electrostatic discharge (ESD) grounding strap to your bare wrist, and connect the strap to one of the ESD points on the chassis.
2. Take each transceiver to be installed out of its electrostatic bag and identify the slot on the component where it will be installed.
3. Verify that each transceiver is covered by a rubber safety cap. If it is not, cover the transceiver with a safety cap.
4. Carefully align the transceiver with the slots in the component. The connectors should face the component.

Copyright © 2014, Juniper Networks, Inc.

5. Slide the transceiver until the connector is seated in the component slot. If you are unable to fully insert the transceiver, make sure the connector is facing the right way.
6. Close the ejector handle of the transceiver.
7. Remove the rubber safety cap from the transceiver and the end of the cable. Insert the cable into the transceiver.
8. Verify that the status LEDs on the component faceplate indicate that the transceiver is functioning correctly.

Related Documentation

- Replacing SRX5800 Services Gateway MPCs on page 181
- Replacing SRX5800 Services Gateway MICs on page 185
- Replacing SRX5800 Services Gateway SPCs on page 196

Upgrading an SRX5800 Services Gateway from Standard-Capacity to High-Capacity Power Supplies

You can replace the standard-capacity power supplies in the SRX5800 Services Gateway with either two or four high-capacity power supplies of the same input type (AC or DC). Two high-capacity power supplies provide adequate power for a fully loaded chassis; installing four high-capacity power supplies provides redundancy in case one power supply in either zone fails. You do not need to power off the device to upgrade to high-capacity power supplies.

NOTE: The services gateway cannot be powered from standard-capacity and high-capacity power supplies simultaneously. The one exception is during the process of replacing standard-capacity power supplies with high-capacity power supplies, when it is permissible to have both types installed briefly.

CAUTION: The services gateway cannot be powered from AC and DC power supplies simultaneously. The first type of power supply detected by the services gateway when initially powered on determines the type of power supply allowed by the services gateway. All installed power supplies of the other type are disabled by the services gateway. If you install a power supply of the other type while the services gateway is operating, the services gateway disables the power supply and generates an alarm.

The following procedures describe how to upgrade from standard-capacity power supplies to high-capacity power supplies of the same input type (AC or DC) without interrupting power to the services gateway components. Choose the procedure that matches your services gateway configuration:

Copyright © 2014, Juniper Networks, Inc.

To upgrade a services gateway that has three or four standard-capacity AC power supplies to two or four high-capacity AC power supplies:



CAUTION: **Limit to five minutes or less the time during which standard-capacity AC power supplies and high-capacity AC power supplies are installed in the services gateway at the same time.**

1. Ensure that the services gateway is running Junos OS Release 10.4 or later. Earlier Junos OS releases do not support high-capacity AC power supplies.
2. If you have not already done so, replace both standard-capacity fan trays with high-capacity fan trays. Also replace the standard-capacity air filter with a high-capacity air filter. For more information, see "Replacing an SRX5800 Services Gateway Fan Tray" on page 150 and "Replacing the SRX5800 Services Gateway Air Filter" on page 155.
3. Check the LEDs on all of the installed power supply faceplates to ensure that they are operating properly.
4. If there are four standard-capacity AC power supplies installed, remove the standard-capacity AC power supply installed in the **PEM0** slot. See "Removing an SRX5800 Services Gateway AC Power Supply" on page 211 for instructions on removing AC power supplies. If there are only three standard-capacity AC power supplies installed in the services gateway, proceed to the next step.
5. Install a high-capacity AC power supply in the vacant slot in the back of the chassis. See "Installing an SRX5800 Services Gateway AC Power Supply" on page 214 for instructions on installing AC power supplies.
6. Check the LEDs on the high-capacity AC power supply faceplate to ensure that it is operating properly.
7. Identify the slot for the next high-capacity AC power supply:
   - If the slot you installed the power supply into in 5 is **PEM0** or **PEM2**, install the next high-capacity AC power supply in either slot **PEM1** or **PEM3**
   - If the slot you installed the power supply into in 5 is **PEM1** or **PEM3**, install the next high-capacity AC power supply in either slot **PEM0** or **PEM2**
8. Remove the standard-capacity AC power supply from the slot you identified in step7. See "Removing an SRX5800 Services Gateway AC Power Supply" on page 211 for instructions on removing AC power supplies.
9. Install a high-capacity AC power supply in the slot you identified in Step 7. See "Installing an SRX5800 Services Gateway AC Power Supply" on page 214 for instructions on installing AC power supplies.
10. Check the LEDs on both high-capacity AC power supply faceplates to ensure that they are operating properly.
11. Remove the remaining two standard-capacity AC power supply from the services gateway. See "Removing an SRX5800 Services Gateway AC Power Supply" on page 211 for instructions on removing AC power supplies.

Copyright © 2014, Juniper Networks, Inc.

12. If you are upgrading to four high-capacity AC power supplies to achieve 2+2 redundancy, install high-capacity AC power supplies in the slots you vacated in Step 11. See "Installing an SRX5800 Services Gateway AC Power Supply" on page 214 for instructions on installing AC power supplies.
13. Check the LEDs on all installed high-capacity AC power supply faceplates to ensure that they are operating properly.

To upgrade a services gateway that has two standard-capacity DC power supplies to two or four high-capacity DC power supplies:

1. Ensure that the services gateway is running Junos OS Release 12.1X44-D10 or later. Earlier Junos OS releases do not support high-capacity DC power supplies.
2. If you have not already done so, replace both standard-capacity fan trays with high-capacity fan trays. Also replace the standard-capacity air filter with a high-capacity air filter. For more information, see "Replacing an SRX5800 Services Gateway Fan Tray" on page 150 and "Replacing the SRX5800 Services Gateway Air Filter" on page 155.
3. Install high-capacity DC power supplies in the two empty PEM slots in the back of the chassis. See "Installing an SRX5800 Services Gateway DC Power Supply" on page 219 for instructions on installing DC power supplies.
4. Check the LEDs on the faceplate of each of the new power supplies to confirm that they are operating properly.
5. Remove both of the standard-capacity power supplies from the services gateway. See "Removing an SRX5800 Services Gateway DC Power Supply" on page 216 for instructions on removing DC power supplies.
6. If you are installing four high-capacity DC power supply to achieve 2+2 redundancy, install high-capacity DC power supplies in the slots vacated in Step 5.
7. Check the LEDs on the faceplate of each of the new power supplies to confirm that they are operating properly.

To upgrade a services gateway that has four standard-capacity DC power supplies to two or four high-capacity DC power supplies:

1. Ensure that the services gateway is running Junos OS Release 12.1X44-D10 or later. Earlier Junos OS releases do not support high-capacity DC power supplies.
2. If you have not already done so, replace both standard-capacity fan trays with high-capacity fan trays. Also replace the standard-capacity air filter with a high-capacity air filter. For more information, see "Replacing an SRX5800 Services Gateway Fan Tray" on page 150 and "Replacing the SRX5800 Services Gateway Air Filter" on page 155.
3. Check the LEDs on all four power supply faceplates to ensure that they are operating properly.
4. Remove the standard-capacity power supply from slot **PEM0**. See "Removing an SRX5800 Services Gateway DC Power Supply" on page 216 for instructions on removing DC power supplies.

 Copyright © 2014, Juniper Networks, Inc.

5. Install a high-capacity DC power supply in the **PEM0** slot in the back of the chassis. See "Installing an SRX5800 Services Gateway DC Power Supply" on page 219 for instructions on installing DC power supplies.
6. Repeat Step 4 and Step 5 to replace the standard-capacity DC power supply in the **PEM1** slot with a high-capacity DC power supply.
7. Check the LEDs on the faceplate of each of the new power supplies to confirm that they are operating properly.
8. Remove the two standard-capacity power supplies from the **PEM2** and **PEM3** slots. See "Removing an SRX5800 Services Gateway DC Power Supply" on page 216 for instructions on removing DC power supplies.
9. If you are upgrading to four high-capacity DC power supplies to achieve 2+2 redundancy, install high-capacity DC power supplies in the **PEM2** and **PEM3** slots. See "Installing an SRX5800 Services Gateway DC Power Supply" on page 219 for instructions on installing DC power supplies.
10. Check the LEDs on the faceplate of each of the new power supplies to confirm that they are operating properly.

Related Documentation

- SRX5800 Services Gateway Power System Overview on page 28
- Removing an SRX5800 Services Gateway AC Power Supply on page 211
- Installing an SRX5800 Services Gateway AC Power Supply on page 214
- Removing an SRX5800 Services Gateway DC Power Supply on page 216
- Installing an SRX5800 Services Gateway DC Power Supply on page 219

Replacing an SRX5800 Services Gateway AC Power Supply

To replace an AC power supply, perform the following procedures:

1. Removing an SRX5800 Services Gateway AC Power Supply on page 211
2. Installing an SRX5800 Services Gateway AC Power Supply on page 214

Removing an SRX5800 Services Gateway AC Power Supply

Before you remove a power supply, be aware of the following:



NOTE: The minimum number of power supplies must be present in the services gateway at all times.



CAUTION: To maintain proper cooling and prevent thermal shutdown of the operating power supply unit, each power supply slot must contain either a power supply or a blank panel. If you remove a power supply, you must install a replacement power supply or a blank panel shortly after the removal.

Copyright © 2014, Juniper Networks, Inc.

NOTE: After powering off a power supply, wait at least 60 seconds before turning it back on.

To remove an AC power supply (see Figure 89 on page 213):

1. Switch off the dedicated customer site circuit breaker for the power supply, and remove the power cord from the AC power source. If the services gateway is equipped with high-capacity AC power supplies, remove both of the power cords for the power supply. Follow the ESD and disconnection instructions for your site.
2. Attach an ESD grounding strap to your bare wrist, and connect the strap to one of the ESD points on the chassis.
3. Move the AC input switch on the chassis above the AC power supply to the off (**O**) position. If the services gateway is equipped with high-capacity AC power supplies you must also move the AC input switch on the power supply itself to the off (**O**) position.
4. While grasping the handle on the power supply faceplate with one hand, use your other hand to pull the spring-loaded locking pin in the release lever away from the chassis and turn the release lever counterclockwise until it stops.
5. Let go of the locking pin in the release lever. Ensure that the pin is seated inside the corresponding hole in the chassis.
6. Pull the power supply straight out of the chassis. The power supply can weigh up to 12 lb (5.5 kg). Be prepared to accept its full weight.

Copyright © 2014, Juniper Networks, Inc.

Figure 89: Removing an AC Power Supply (Standard-Capacity Shown, High-Capacity Similar)

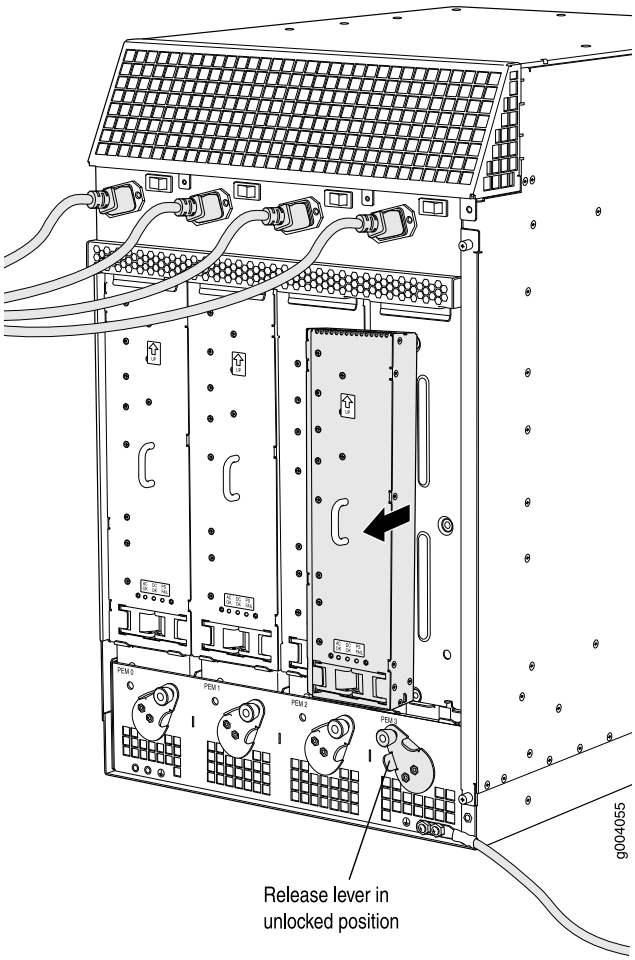

WARNING: Do not touch the power connector on the top of the power supply (see Figure 90 on page 213). It can contain dangerous voltages.

Figure 90: Top of the Power Supply Showing Midplane Connector

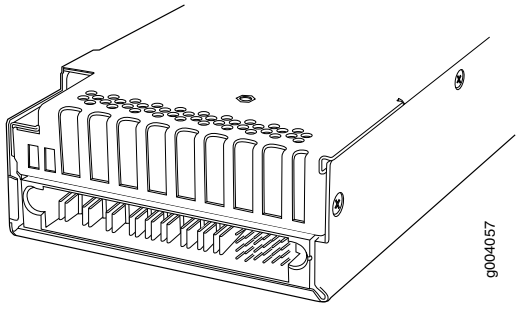

Connector end of AC or DC power supply

Copyright © 2014, Juniper Networks, Inc.

Installing an SRX5800 Services Gateway AC Power Supply

To install an AC power supply (see Figure 92 on page 215):

1. Attach an ESD grounding strap to your bare wrist, and connect the strap to one of the ESD points on the chassis.
2. If you have not already done so, move the AC input switch in the chassis above the empty power supply slot to the off (**O**) position.
3. For each high-capacity AC power supply, move the input mode switch to position **0** for one feed or position **1** for two feeds (see Figure 91 on page 214). We recommend that you use two AC power feeds and set the mode input switch to **1**.

Figure 91: High-Capacity AC Power Supply Input Mode Switch

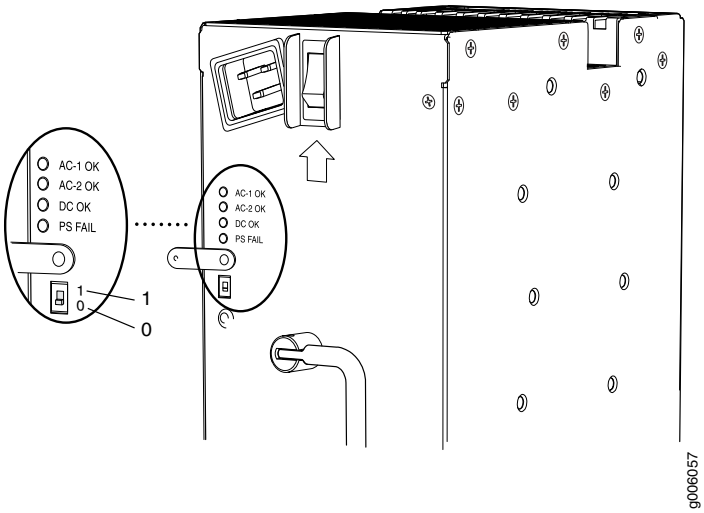

NOTE: **Do not use a pencil to set the mode switch, because fragments can break off and cause damage to the power supply.**

4. If you are installing a high-capacity power supply, move the AC input switch on the faceplate of the power supply itself to the off (**O**) position.
5. Ensure that the release lever below the empty power supply slot is locked in the counterclockwise position (see Figure 92 on page 215).

   If necessary, pull the spring-loaded locking pin in the release lever away from the chassis and turn the release lever counterclockwise until it stops. Let go of the locking pin in the release lever. Ensure that the pin is seated inside the corresponding hole in the chassis.
6. Using both hands, slide the power supply straight into the chassis until the power supply is fully seated in the chassis slot. The power supply faceplate should be flush with any adjacent power supply faceplates.

Copyright © 2014, Juniper Networks, Inc.

The small tab on the metal housing that is controlled by the release lever must be inside of the corresponding slot at the bottom of the power supply (see Figure 92 on page 215). This tab is used to pull the power supply down in the chassis slot, prior to removing the power supply.

Figure 92: Installing an AC Power Supply (Standard-Capacity Shown, High-Capacity Similar)

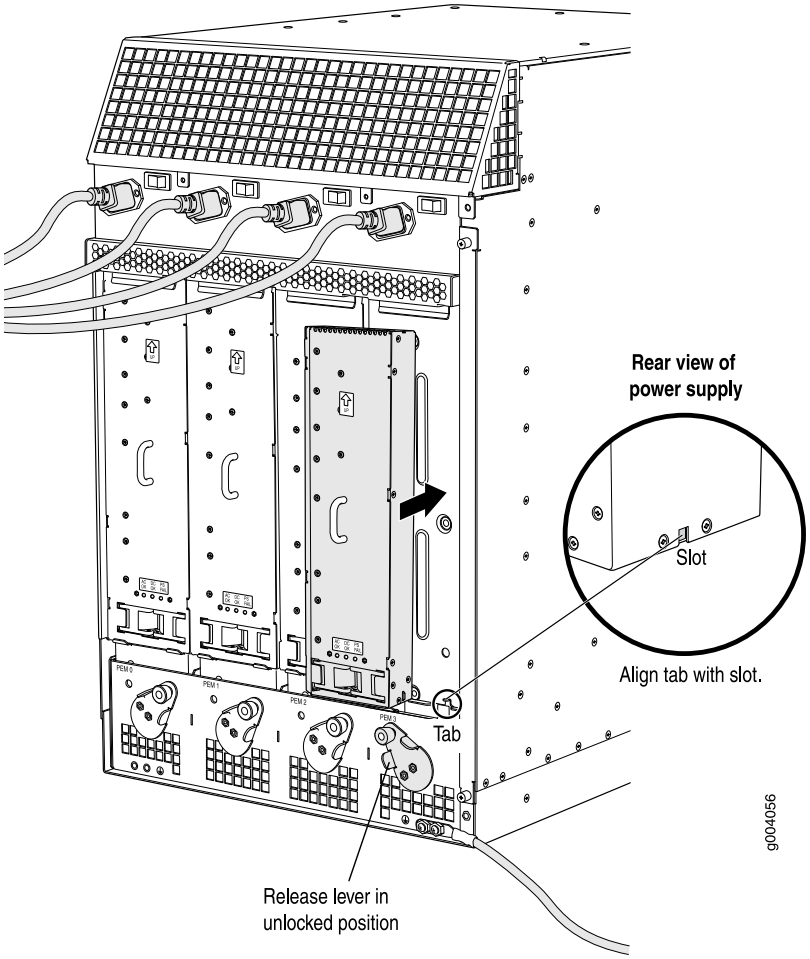

7. While firmly pushing the handle on the power supply faceplate with one hand, use your other hand to pull the spring-loaded locking pin in the release lever away from the chassis and turn the release lever clockwise until it stops.
8. Let go of the locking pin in the release lever. Ensure that the pin is seated inside the corresponding hole in the chassis.
9. If you are installing a high-capacity power supply, connect a power cord to the appliance inlet at the top edge of the power supply. For more information, see "Connecting an SRX5800 Services Gateway AC Power Supply Cord" on page 224.
10. Move the AC input switch in the chassis above the power supply to the on (—) position.

Copyright © 2014, Juniper Networks, Inc.

11. If you are installing a high-capacity power supply, move the AC input switch on the faceplate of the power supply itself to the on (**1**) position.
12. Verify the following LED indications for each installed power supply:
    - For standard-capacity AC power supplies, verify that the **AC OK** and **DC OK** LEDs light steadily and the **PS FAIL** LED is not lit.
    - For high-capacity AC power supplies, verify that the **DC OK** LED lights steadily and the **PS FAIL** LED is not lit. In addition, the **AC-1 OK** LED should light green steadily if the upper AC feed (on the chassis above the power supply) is connected and receiving power, and the **AC-2 OK** LED should light green steadily if the lower AC feed (on the power supply itself) is connected and receiving power.



NOTE: **After a power supply is powered on, it can take up to 60 seconds for status indicators—such as the status LEDs on the power supply and the show chassis command display—to indicate that the power supply is functioning normally. Ignore error indicators that appear during the first 60 seconds.**

If any of the status LEDs indicates that the power supply is not functioning normally, repeat the installation and cabling procedures.

Related Documentation

- SRX5800 Services Gateway High-Capacity AC Power Supply on page 31
- SRX5800 Services Gateway High-Capacity AC Power Supply LEDs on page 33
- SRX5800 Services Gateway Standard-Capacity AC Power Supply on page 34
- SRX5800 Services Gateway Standard-Capacity AC Power Supply LEDs on page 35
- SRX5800 Services Gateway AC Power Supply Specifications on page 282
- Replacing an SRX5800 Services Gateway AC Power Supply Cord on page 224

Replacing an SRX5800 Services Gateway DC Power Supply

To replace a DC power supply, perform the following procedures:

1. Removing an SRX5800 Services Gateway DC Power Supply on page 216
2. Installing an SRX5800 Services Gateway DC Power Supply on page 219

Removing an SRX5800 Services Gateway DC Power Supply

Before you remove a power supply, be aware of the following:



NOTE: **The minimum number of power supplies must be present in the services gateway at all times.**

Copyright © 2014, Juniper Networks, Inc.

WARNING: Before performing DC power procedures, ensure that power is removed from the DC circuit. To ensure that all power is off, locate the circuit breaker on the panel board that services the DC circuit, switch the circuit breaker to the off position, and tape the switch handle of the circuit breaker in the off position.

CAUTION: To maintain proper cooling and prevent thermal shutdown of the operating power supply unit, each power supply slot must contain either a power supply or a blank panel. If you remove a power supply, you must install a replacement power supply or a blank panel shortly after the removal.

NOTE: After powering off a power supply, wait at least 60 seconds before turning it back on.

To remove a DC power supply (see Figure 93 on page 218):

1. Switch off the dedicated customer site circuit breaker for the power supply being removed. Follow your site's procedures for ESD.
2. Make sure that the voltage across the DC power source cable leads is 0 V and that there is no chance that the cables might become active during the removal process. If the services gateway is equipped with high-capacity DC power supplies, check both pairs of DC leads to make sure that the voltage is 0 V.
3. Verify that the **INPUT OK** LEDs on the power supply to be removed are not lit.
4. Attach an ESD grounding strap to your bare wrist, and connect the strap to one of the ESD points on the chassis.
5. Move the DC circuit breaker on the power supply faceplate to the off (**O**) position.
6. Remove the clear plastic cover protecting the terminal studs on the faceplate.
7. Remove the nuts and washers from the terminal studs. (Use a 7/16-in. nut driver or socket wrench.)
8. Remove the cable lugs from the terminal studs.
9. Loosen the captive screw on the cable restraint on the lower edge of the power supply faceplate.
10. Carefully move the power cables out of the way.
11. While grasping the handle on the power supply faceplate with one hand, use your other hand to pull the spring-loaded locking pin in the release lever away from the chassis and turn the release lever counterclockwise until it stops.

Copyright © 2014, Juniper Networks, Inc.

12. Let go of the locking pin in the release lever. Ensure that the pin is seated inside the corresponding hole in the chassis.
13. Pull the power supply straight out of the chassis. The power supply can weigh up to 12 lb (5.5 kg). Be prepared to accept its full weight.

Figure 93: Removing a DC Power Supply from the Services Gateway (Standard-Capacity Shown, High-Capacity Similar)

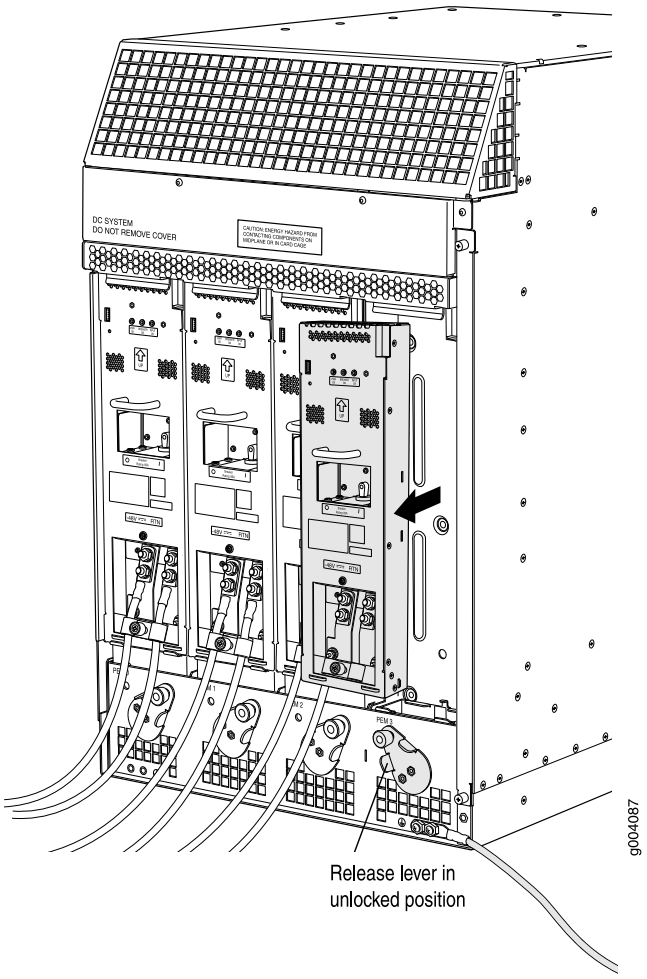

WARNING: Do not touch the power connector on the top of the power supply (see Figure 94 on page 219). It can contain dangerous voltages.

Copyright © 2014, Juniper Networks, Inc.

Figure 94: Top of the Power Supply Showing Midplane Connector

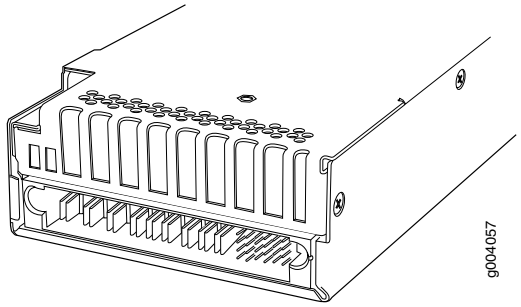

Connector end of AC or DC power supply

Installing an SRX5800 Services Gateway DC Power Supply

WARNING: Before performing DC power procedures, ensure that power is removed from the DC circuit. To ensure that all power is off, locate the circuit breaker on the panel board that services the DC circuit, switch the circuit breaker to the off position, and tape the switch handle of the circuit breaker in the off position.

To install a DC power supply (see Figure 95 on page 220):

1. Verify that the power switch on the power supply is in the off (**O**) position.
2. Attach an ESD grounding strap to your bare wrist, and connect the strap to one of the ESD points on the chassis.
3. Move the switch or circuit breaker on the power supply faceplate to the off (**O**) position.
4. For a high-capacity DC power supply, configure the power supply for the number of DC feeds:
   a. Rotate the metal cover away from the input mode switch to expose the switch.
   b. Move the input mode switch to position **0** for one feed or position **1** for two feeds.

   NOTE: The high-capacity DC power supply will operate with only one of its two DC inputs connected to a power feed. However, its DC output will be limited to a maximum of 1700 W. We recommend that you connect two DC power feeds to each high-capacity DC power supply.
5. Ensure that the voltage across the DC power source cable leads is 0 V and that there is no chance that the cable leads might become active during installation.
6. Ensure that the release lever below the empty power supply slot is locked in the counterclockwise position (see Figure 95 on page 220).

Copyright © 2014, Juniper Networks, Inc.

If necessary, pull the spring-loaded locking pin in the release lever away from the chassis and turn the release lever counterclockwise until it stops. Let go of the locking pin in the release lever. Ensure that the pin is seated inside the corresponding hole in the chassis.

7. Using both hands, slide the power supply straight into the chassis until the power supply is fully seated in the chassis slot.

   The small tab on the metal housing that is controlled by the release lever must be inside of the corresponding slot at the bottom of the power supply (see Figure 95 on page 220). This tab is used to pull the power supply down in the chassis slot, prior to removing the power supply.

Figure 95: Installing a DC Power Supply (Standard Capacity Shown, High-Capacity Similar)

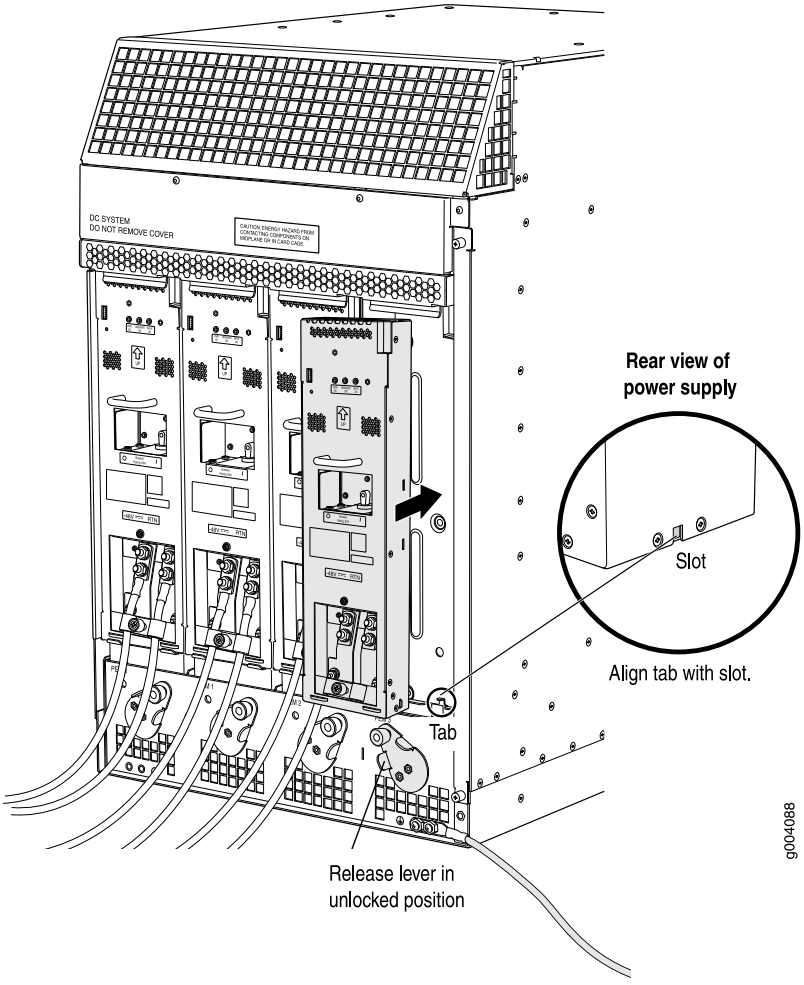

8. While firmly pushing the handle on the power supply faceplate with one hand, use your other hand to pull the spring-loaded locking pin in the release lever away from the chassis and turn the release lever clockwise until it stops.

Copyright © 2014, Juniper Networks, Inc.

9. Let go of the locking pin in the release lever. Ensure that the pin is seated inside the corresponding hole in the chassis.
10. Remove the clear plastic cover protecting the terminal studs on the faceplate.
11. Remove the nuts and washers from the terminal studs.
12. Secure each power cable lug to the terminal studs, first with the split washer, then with the nut.

CAUTION: You must ensure that power connections maintain the proper polarity. The power source cables might be labeled (+) and (–) to indicate their polarity. There is no standard color coding for DC power cables. The color coding used by the external DC power source at your site determines the color coding for the leads on the power cables that attach to the terminal studs on each power supply.

For a standard-capacity power supply:

a. Attach the positive (+) DC source power cable lug to the **RTN** (return) terminal.

b. Attach the negative (–) DC source power cable lug to the **–48V** (input) terminal.

Figure 96: Connecting DC Power to a Standard-Capacity DC Power Supply

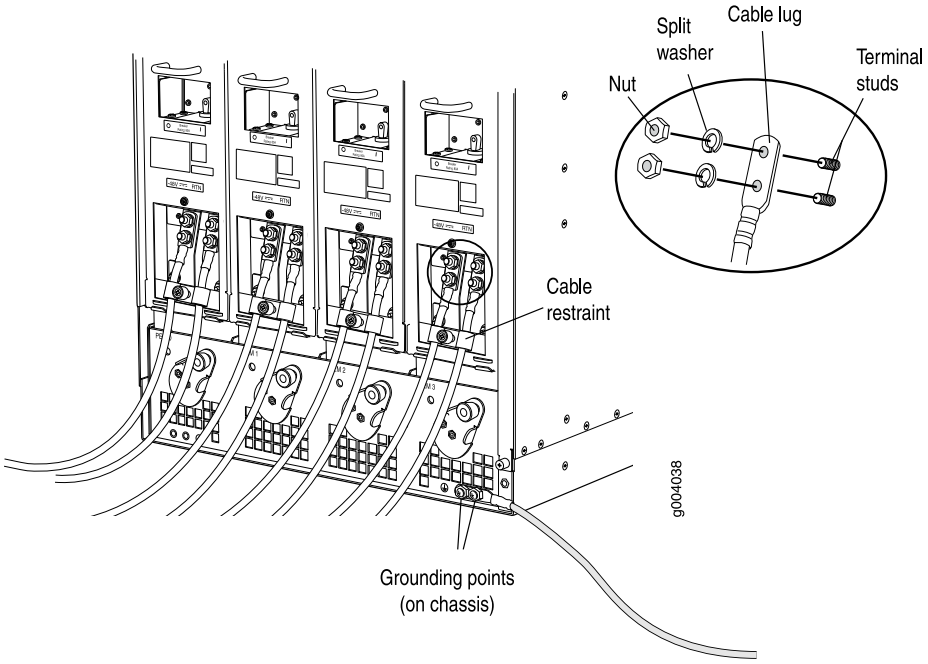

c. Apply between 23 lb-in. (2.6 Nm) and 25 lb-in. (2.8 Nm) of torque to each nut (see Figure 96 on page 221).

For a high-capacity power supply:

a. On **INP0**, attach the positive (+) DC source power cable lug to the **RTN** (return) terminal. Repeat this step for **INP1** if using two feeds.

b. On **INP0** attach the negative (–) DC source power cable lug to the –48V (input) terminal. Repeat this step for **INP1** if using two feeds.

Figure 97: Connecting DC Power to a High-Capacity DC Power Supply

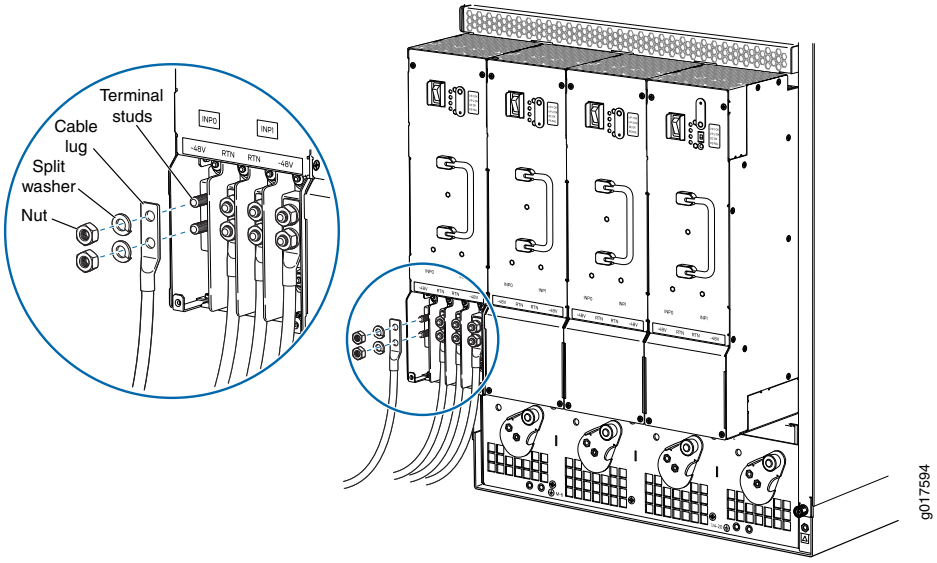

c. Apply between 23 lb-in. (2.6 Nm) and 25 lb-in. (2.8 Nm) of torque to each nut (see Figure 97 on page 222).

CAUTION: Ensure that each power cable lug seats flush against the surface of the terminal block as you are tightening the nuts. Ensure that each nut is properly threaded onto the terminal stud. The nut should be able to spin freely with your fingers when it is first placed onto the terminal stud. Applying installation torque to the nut when improperly threaded may result in damage to the terminal stud.

CAUTION: The maximum torque rating of the terminal studs on the DC power supply is 36 in-lb. (4.0 Nm). The terminal studs may be damaged if excessive torque is applied. Use only a torque-controlled driver or socket wrench to tighten nuts on the DC power supply terminal studs.

Copyright © 2014, Juniper Networks, Inc.

NOTE: The DC power supplies in slots PEM0 and PEM1 must be powered by dedicated power feeds derived from feed A, and the DC power supplies in PEM2 and PEM3 must be powered by dedicated power feeds derived from feed B. This configuration provides the commonly deployed A/B feed redundancy for the system.

13. For standard-capacity DC power supplies, secure each DC power cable to its strain relief bracket as follows:
    a. Loosen the captive screw on the cable restraint on the lower edge of the power supply faceplate.
    b. Route the positive and negative DC power cables through the left and right sides of the cable restraint.
    c. Tighten the cable restraint captive screw to hold the power cables in place.
14. Replace the clear plastic cover over the terminal studs on the faceplate.
15. Verify that the power cabling is correct, that the cables are not touching, and that they do not block access to services gateway components or drape where people could trip on them.
16. Switch on the dedicated customer site circuit breaker.
17. Verify that the input LEDs on the power supply indicate that the DC power is connected properly:
    - For a standard-capacity power supply, verify that the **INPUT OK** LED on the power supply is lit steadily.
    - For a high-capacity power supply, verify that the **INP0 OK** or **INP1 OK** LEDs on the power supply are lit green steadily. If using two feeds, verify that both **INP0 OK** and **INP1 OK** LEDs on the power supply are lit steadily

NOTE: An input LED will be lit amber if that input's voltage is in reverse polarity. Check the polarity of the power cables to fix the condition

18. Move the switch or circuit breaker on the DC power supply to the on (**|**) position .
19. Verify that the output LEDs on the power supply indicate that it is operating properly:
    - For a standard-capacity power supply, verify that the **BREAKER ON** and **PWR OK** LEDs are lit steadily.
    - For a high-capacity power supply, verify that the **DC OK** LED is lit, and that the **PS FAIL** LED is not lit.

Related Documentation

- SRX5800 Services Gateway High-Capacity DC Power Supply on page 36
- SRX5800 Services Gateway High-Capacity DC Power Supply LEDs on page 38

Copyright © 2014, Juniper Networks, Inc.

- SRX5800 Services Gateway Standard-Capacity DC Power Supply on page 39
- SRX5800 Services Gateway Standard-Capacity DC Power Supply LEDs on page 40
- Replacing an SRX5800 Services Gateway DC Power Supply Cable on page 226
- SRX5800 Services Gateway DC Power Supply Specifications on page 286

Replacing an SRX5800 Services Gateway AC Power Supply Cord

To replace an SRX5800 Services Gateway AC power supply cord, perform the following procedures:

1. Disconnecting an SRX5800 Services Gateway AC Power Supply Cord on page 224
2. Connecting an SRX5800 Services Gateway AC Power Supply Cord on page 224

Disconnecting an SRX5800 Services Gateway AC Power Supply Cord

To disconnect an AC power cord:

1. Attach an ESD grounding strap to your bare wrist, and connect the strap to one of the ESD points on the chassis.
2. Move the AC input switch nearest to the appliance inlet for the power cord you are replacing to the off (**O**) position:
   - For standard-capacity AC power supplies, there is only one AC input switch for each power supply; it is located next to the appliance inlet on the chassis above the power supply.
   - For high-capacity AC power supplies, there is one AC input switch for each of the two appliance inlets. One is located next to the AC inlet on the chassis above the power supply, and the other is located next to the appliance inlet on the power supply itself.
3. Unplug the power cord from the power source receptacle.
4. Unplug the power cord from the appliance inlet on the chassis or power supply.

Connecting an SRX5800 Services Gateway AC Power Supply Cord



NOTE: **Power cords are not supplied with the services gateway. You must order the power cords separately.**

To connect an AC power cord:

1. Locate a replacement power cord with the type of plug appropriate for your geographical location.
2. Attach an ESD grounding strap to your bare wrist, and connect the strap to one of the ESD points on the chassis.

Copyright © 2014, Juniper Networks, Inc.

3. Verify that the AC input switch nearest to the appliance inlet for the power cord you are replacing is in the off (**O**) position:

   - For standard-capacity AC power supplies, there is only one AC input switch for each power supply; it is located next to the appliance inlet on the chassis above the power supply.
   - For high-capacity AC power supplies, there is one AC input switch for each of the two appliance inlets. One switch is located next to the AC inlet on the chassis above the power supply, and the other is located next to the appliance inlet on the power supply itself.

4. Plug the replacement power cord into the corresponding appliance inlet located in the chassis directly above the power supply, or, in the case of a high-capacity AC power supply, at the top edge of the power supply itself.

5. Insert the power cord plug into an external AC power source receptacle.

   

   NOTE: **Each power supply must be connected to a dedicated AC power feed and a dedicated customer site circuit breaker. We recommend that you use a 15 A (250 VAC) minimum, or as required by local code.**

6. Dress the power cord appropriately. Verify that the power cord does not block the air exhaust and access to services gateway components, or drape where people could trip on it.

7. Move the AC input switch nearest to the appliance inlet for the power cord you are replacing to the on (**I**) position:

   - For standard-capacity AC power supplies, there is only one AC input switch for each power supply; it is located next to the appliance inlet on the chassis above the power supply.
   - For high-capacity AC power supplies, there is one AC input switch for each of the two appliance inlets. One is located next to the AC inlet on the chassis above the power supply, and the other is located next to the appliance inlet on the power supply itself.

8. Verify the following LED indications for the power supply for which you replaced the power cord:

   - For standard-capacity AC power supplies, verify that the **AC OK** and **DC OK** LEDs light steadily and the **PS FAIL** LED is not lit.
   - For high-capacity AC power supplies, verify that the **DC OK** LED lights steadily and the **PS FAIL** LED is not lit. In addition, the **AC-1 OK** LED should light green steadily if the upper AC feed (on the chassis above the power supply) is connected and receiving power, and the **AC-2 OK** LED should light green steadily if the lower AC feed (on the power supply itself) is connected and receiving power.

   If any of the status LEDs indicates that the power supply is not functioning normally, repeat the installation and cabling procedures.

Copyright © 2014, Juniper Networks, Inc.

Related Documentation

- SRX5800 Services Gateway High-Capacity AC Power Supply on page 31
- SRX5800 Services Gateway High-Capacity AC Power Supply LEDs on page 33
- SRX5800 Services Gateway Standard-Capacity AC Power Supply on page 34
- SRX5800 Services Gateway Standard-Capacity AC Power Supply LEDs on page 35
- SRX5800 Services Gateway AC Power Supply Specifications on page 282
- Replacing an SRX5800 Services Gateway AC Power Supply on page 211

Replacing an SRX5800 Services Gateway DC Power Supply Cable

To replace an SRX5800 Services Gateway DC power supply cable, perform the following procedures:

1. Disconnecting an SRX5800 Services Gateway DC Power Supply Cable on page 226
2. Connecting an SRX5800 Services Gateway DC Power Supply Cable on page 227

Disconnecting an SRX5800 Services Gateway DC Power Supply Cable



WARNING: **Before performing DC power procedures, ensure that power is removed from the DC circuit. To ensure that all power is off, locate the circuit breaker on the panel board that services the DC circuit, switch the circuit breaker to the off position, and tape the switch handle of the circuit breaker in the off position.**

To disconnect a power cable for a DC power supply:

1. Switch off the dedicated customer site circuit breaker for the power supply being removed. Follow your site's procedures for ESD.
2. Make sure that the voltage across the DC power source cable leads is 0 V and that there is no chance that the cables might become active during the removal process.
3. Verify that the input LEDs on the power supply are not lit (**INPUT OK** for a standard-capacity power supply, **INP0 OK** and **INP1 OK** for a high-capacity power supply).
4. Remove the power cable from the external DC power source.
5. Attach an ESD grounding strap to your bare wrist, and connect the strap to one of the ESD points on the chassis.
6. Move the DC circuit breaker on the power supply faceplate to the off (**O**) position.
7. Remove the clear plastic cover protecting the terminal studs on the faceplate.
8. Remove the nut and washer from the terminal studs. (Use a 7/16–in. nut driver or socket wrench.)
9. Remove the cable lug from the terminal studs.

Copyright © 2014, Juniper Networks, Inc.

10. For a standard-capacity power supply, loosen the captive screw on the cable restraint on the lower edge of the power supply faceplate.
11. Carefully move the power cable out of the way.

Connecting an SRX5800 Services Gateway DC Power Supply Cable



WARNING: **Before performing DC power procedures, ensure that power is removed from the DC circuit. To ensure that all power is off, locate the circuit breaker on the panel board that services the DC circuit, switch the circuit breaker to the off position, and tape the switch handle of the circuit breaker in the off position.**

To connect a power cable for a DC power supply:

1. Locate a replacement power cable that meets the specifications defined in "DC Power Cable Specifications for the SRX5800 Services Gateway" on page 289.
2. Verify that a licensed electrician has attached a cable lug to the replacement power cable.
3. Verify that the input LEDs on the power supply are not lit (**INPUT OK** for a standard-capacity power supply, **INP0 OK** and **INP1 OK** for a high-capacity power supply).
4. Secure the power cable lug to the terminal studs, first with the split washer, then with the nut. Apply between 23 lb-in. (2.6 Nm) and 25 lb-in. (2.8 Nm) of torque to each nut (see Figure 98 on page 228 and Figure 99 on page 228).

Copyright © 2014, Juniper Networks, Inc.

Figure 98: Connecting Power Cables to a Standard Capacity DC Power Supply

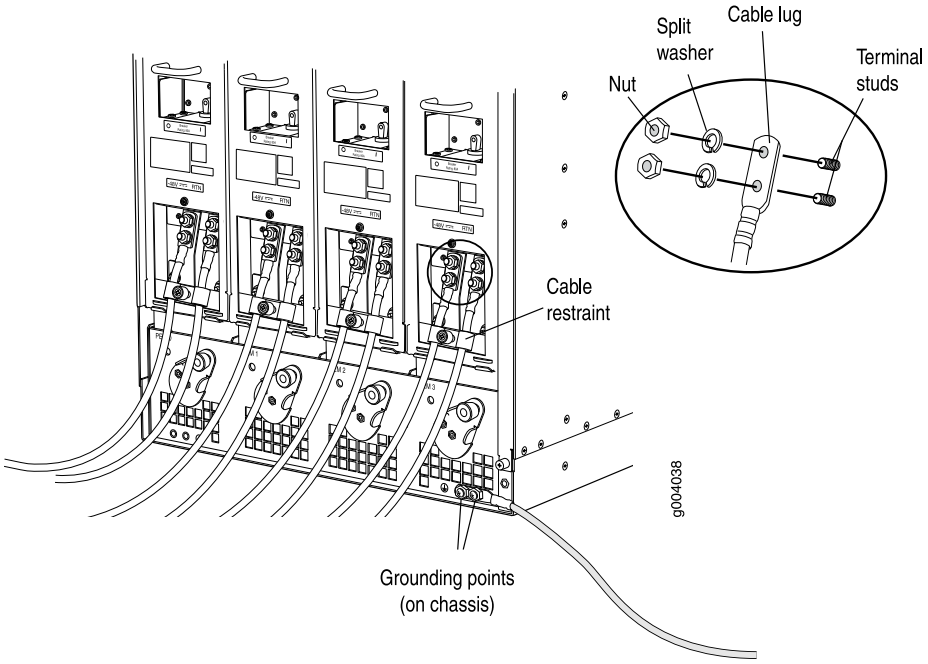

Figure 99: Connecting DC Power Cables to a High-Capacity DC Power Supply

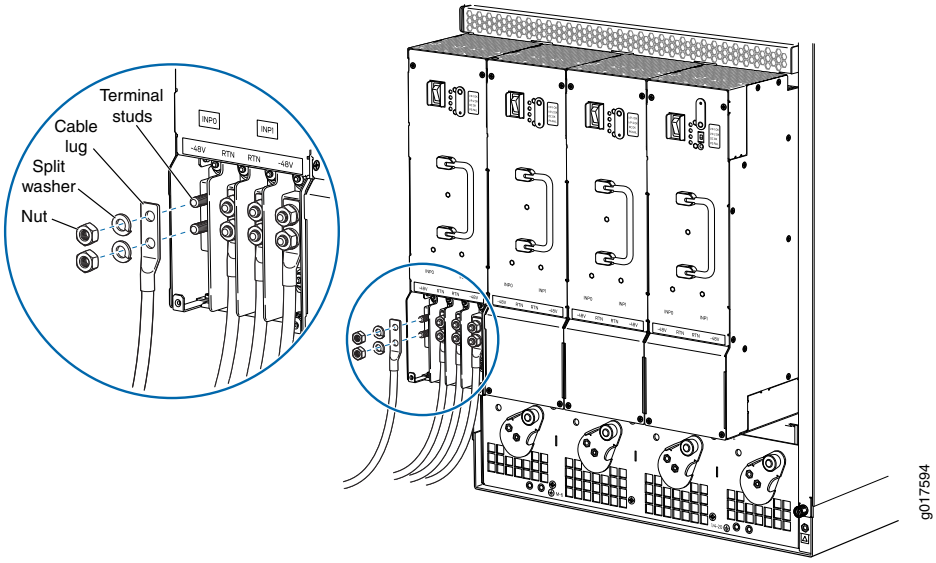

Copyright © 2014, Juniper Networks, Inc.

5. For standard-capacity DC power supplies, secure each DC power cable to its strain relief bracket as follows:
   a. Loosen the captive screw on the cable restraint on the lower edge of the power supply faceplate.
   b. Route the positive and negative DC power cables through the left and right sides of the cable restraint.
   c. Tighten the cable restraint captive screw to hold the power cables in place.
6. Verify that the DC power cable is connected correctly, that it does not touch or block access to services gateway components, and that it does not drape where people could trip on it.
7. Replace the clear plastic cover over the terminal studs on the faceplate.
8. Attach the power cable to the DC power source.
9. Turn on the dedicated customer site circuit breaker to the power supply.
10. Verify that the input LEDs on the power supply are lit (**INPUT OK** for a standard-capacity power supply, **INP0 OK** and **INP1 OK** for a high-capacity power supply).
11. Move the DC circuit breaker on the power supply to the on (**|**) position and verify that the output LEDs on the power supply indicate that it is operating properly:
    - For a standard-capacity power supply, verify that the **BREAKER ON** and **PWR OK** LEDs are lit steadily.
    - For a high-capacity power supply, verify that the **DC OK** LED is lit, and that the **PS FAIL** LED is not lit.

Related Documentation

- SRX5800 Services Gateway High-Capacity DC Power Supply on page 36
- SRX5800 Services Gateway High-Capacity DC Power Supply LEDs on page 38
- SRX5800 Services Gateway Standard-Capacity DC Power Supply on page 39
- SRX5800 Services Gateway Standard-Capacity DC Power Supply LEDs on page 40
- Replacing an SRX5800 Services Gateway DC Power Supply on page 216
- SRX5800 Services Gateway DC Power Supply Specifications on page 286

Replacing the SRX5800 Services Gateway Cable Manager

To replace the cable manager, perform the following procedures:

1. Removing the SRX5800 Services Gateway Cable Manager on page 230
2. Installing the SRX5800 Services Gateway Cable Manager on page 230

Copyright © 2014, Juniper Networks, Inc.

Removing the SRX5800 Services Gateway Cable Manager

To remove the cable manager (see Figure 100 on page 230):

1. Attach an ESD grounding strap to your bare wrist, and connect the strap to one of the ESD points on the chassis.
2. Using a 7/16-in. nut driver, unscrew the nuts on the corners of the cable manager.
3. Grasp the bottom of the cable manager and pull it straight out from the studs on the front of the chassis.

Figure 100: Removing the Cable Manager

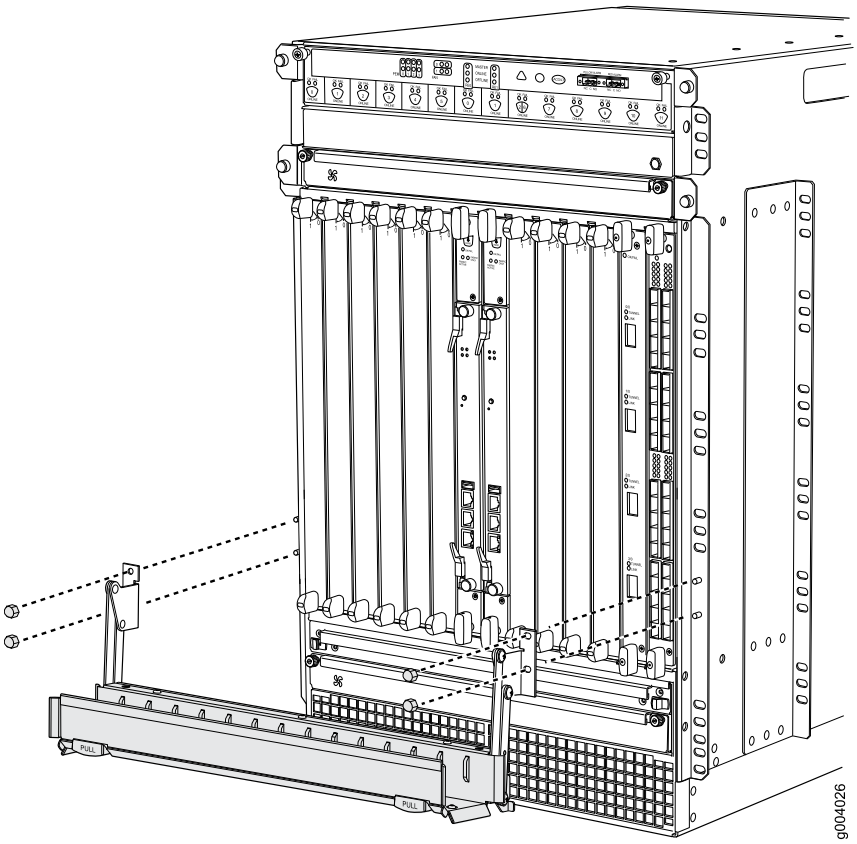

Installing the SRX5800 Services Gateway Cable Manager

To install the cable manager (see Figure 101 on page 231):

1. Position the standard cable manager on the studs on the lower front of the chassis.
2. Insert the nuts on the corners in the standard cable manager onto the studs on the chassis.
3. Using a 7/16-in. nut driver, tighten the nuts securely.

Copyright © 2014, Juniper Networks, Inc.

Figure 101: Installing the Cable Manager

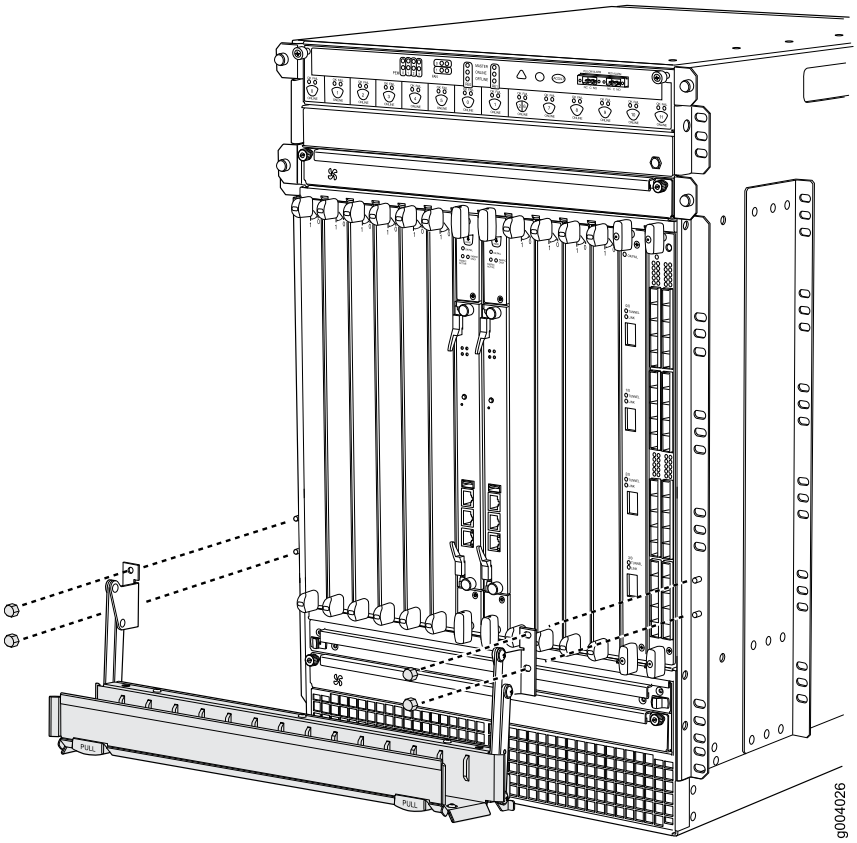

Related Documentation

- SRX5800 Services Gateway Cable Manager Description on page 43
- Removing the Cable Manager Before Installing the SRX5800 Services Gateway Chassis on page 71
- Reinstalling the Cable Manager After Installing the SRX5800 Services Gateway Chassis on page 84

Copyright © 2014, Juniper Networks, Inc.

Copyright © 2014, Juniper Networks, Inc.

PART 4

Appendixes

- Safety and Regulatory Compliance Information on page 235
- SRX5800 Services Gateway Environmental Specifications on page 273
- SRX5800 Services Gateway Power Guidelines, Requirements, and Specifications on page 275
- Cable and Wire Guidelines and Specifications for the SRX5800 Services Gateway on page 293
- Cable Connector Pinouts on page 299
- Contacting Customer Support and Returning the SRX5800 Services Gateway Hardware on page 301

Copyright © 2014, Juniper Networks, Inc.

Copyright © 2014, Juniper Networks, Inc.

APPENDIX A

Safety and Regulatory Compliance Information

- SRX5800 Services Gateway Definition of Safety Warning Levels on page 235
- SRX5800 Services Gateway General Safety Guidelines and Warnings on page 237
- Additional SRX5800 Services Gateway Warnings on page 238
- Preventing Electrostatic Discharge Damage to the SRX5800 Services Gateway on page 241
- SRX5800 Services Gateway Fire Safety Requirements and Fire Suppression Equipment on page 243
- SRX5800 Services Gateway Installation Safety Guidelines and Warnings on page 244
- SRX5800 Services Gateway Laser and LED Safety Guidelines and Warnings on page 250
- SRX5800 Services Gateway Maintenance and Operational Safety Guidelines and Warnings on page 254
- SRX5800 Services Gateway Electrical Safety Guidelines and Warnings on page 259
- SRX5800 Services Gateway Agency Approvals on page 270
- SRX5800 Services Gateway Compliance Statements for EMC Requirements on page 271

SRX5800 Services Gateway Definition of Safety Warning Levels

This guide uses the following levels of safety warnings:



NOTE: You might find this information helpful in a particular situation or might otherwise overlook it.



CAUTION: You need to observe the specified guidelines to avoid minor injury or discomfort to you or severe damage to the services gateway.



WARNING: This symbol alerts you to the risk of personal injury from a laser.

Copyright © 2014, Juniper Networks, Inc.



WARNING: This symbol means danger. You are in a situation that could cause bodily injury. Before you work on any equipment, be aware of the hazards involved with electrical circuitry and be familiar with standard practices for preventing accidents.

Waarschuwing Dit waarschuwingssymbool betekent gevaar. U verkeert in een situatie die lichamelijk letsel kan veroorzaken. Voordat u aan enige apparatuur gaat werken, dient u zich bewust te zijn van de bij elektrische schakelingen betrokken risico's en dient u op de hoogte te zijn van standaard maatregelen om ongelukken te voorkomen.

Varoitus Tämä varoitusmerkki merkitsee vaaraa. Olet tilanteessa, joka voi johtaa ruumiinvammaan. Ennen kuin työskentelet minkään laitteiston parissa, ota selvää sähkökytkentöihin liittyvistä vaaroista ja tavanomaisista onnettomuuksien ehkäisykeinoista.

Attention Ce symbole d'avertissement indique un danger. Vous vous trouvez dans une situation pouvant causer des blessures ou des dommages corporels. Avant de travailler sur un équipement, soyez conscient des dangers posés par les circuits électriques et familiarisez-vous avec les procédures couramment utilisées pour éviter les accidents.

Warnung Dieses Warnsymbol bedeutet Gefahr. Sie befinden sich in einer Situation, die zu einer Körperverletzung führen könnte. Bevor Sie mit der Arbeit an irgendeinem Gerät beginnen, seien Sie sich der mit elektrischen Stromkreisen verbundenen Gefahren und der Standardpraktiken zur Vermeidung von Unfällen bewußt.

Avvertenza Questo simbolo di avvertenza indica un pericolo. La situazione potrebbe causare infortuni alle persone. Prima di lavorare su qualsiasi apparecchiatura, occorre conoscere i pericoli relativi ai circuiti elettrici ed essere al corrente delle pratiche standard per la prevenzione di incidenti.

Advarsel Dette varselsymbolet betyr fare. Du befinner deg i en situasjon som kan føre til personskade. Før du utfører arbeid på utstyr, må du vare oppmerksom på de faremomentene som elektriske kretser innebærer, samt gjøre deg kjent med vanlig praksis når det gjelder å unngå ulykker.

Aviso Este símbolo de aviso indica perigo. Encontra-se numa situação que lhe poderá causar danos físicos. Antes de começar a trabalhar com qualquer equipamento, familiarize-se com os perigos relacionados com circuitos eléctricos, e com quaisquer práticas comuns que possam prevenir possíveis acidentes.

¡Atención! Este símbolo de aviso significa peligro. Existe riesgo para su integridad física. Antes de manipular cualquier equipo, considerar los riesgos que entraña la corriente eléctrica y familiarizarse con los procedimientos estándar de prevención de accidentes.

Copyright © 2014, Juniper Networks, Inc.

Varning! Denna varningssymbol signalerar fara. Du befinner dig i en situation som kan leda till personskada. Innan du utför arbete på någon utrustning måste du vara medveten om farorna med elkretsar och känna till vanligt förfarande för att förebygga skador.

Related Documentation

- SRX5800 Services Gateway General Safety Guidelines and Warnings on page 237
- Preventing Electrostatic Discharge Damage to the SRX5800 Services Gateway on page 241
- SRX5800 Services Gateway Fire Safety Requirements and Fire Suppression Equipment on page 243

SRX5800 Services Gateway General Safety Guidelines and Warnings

The following guidelines help ensure your safety and protect the services gateway from damage. The list of guidelines might not address all potentially hazardous situations in your working environment, so be alert and exercise good judgment at all times.

- Perform only the procedures explicitly described in this guide. Make sure that only authorized service personnel perform other system services.
- Keep the area around the chassis clear and free from dust before, during, and after installation.
- Keep tools away from areas where people could trip on them.
- Do not wear loose clothing or jewelry, such as rings, bracelets, or chains, which could become caught in the chassis.
- Wear safety glasses if you are working under any conditions that could be hazardous to your eyes.
- Do not perform any actions that create a potential hazard to people or that make the equipment unsafe.
- Never attempt to lift an object that is too heavy for one person to handle.
- Never install or manipulate wiring during electrical storms.
- Never install electrical jacks in wet locations unless the jacks are specifically designed for wet environments.
- Operate the services gateway only when it is properly grounded.
- Do not open or remove chassis covers or sheet metal parts unless instructions are provided in this guide. Such an action could cause severe electrical shock.
- Do not push or force any objects through any opening in the chassis frame. Such an action could result in electrical shock or fire.

Copyright © 2014, Juniper Networks, Inc.

- Avoid spilling liquid onto the services gateway chassis or onto any services gateway component. Such an action could cause electrical shock or could damage the services gateway.
- Avoid touching uninsulated electrical wires or terminals that have not been disconnected from their power source. Such an action could cause electrical shock.

Related Documentation

- SRX5800 Services Gateway Definition of Safety Warning Levels on page 235
- Preventing Electrostatic Discharge Damage to the SRX5800 Services Gateway on page 241
- SRX5800 Services Gateway Fire Safety Requirements and Fire Suppression Equipment on page 243

Additional SRX5800 Services Gateway Warnings

- Qualified Personnel Warning on page 238
- Restricted Access Area Warning on page 239

Qualified Personnel Warning



WARNING: **Only trained and qualified personnel should install or replace the services gateway.**

Waarschuwing Installatie en reparaties mogen uitsluitend door getraind en bevoegd personeel uitgevoerd worden.

Varoitus Ainoastaan koulutettu ja pätevä henkilökunta saa asentaa tai vaihtaa tämän laitteen.

Attention Tout installation ou remplacement de l'appareil doit être réalisé par du personnel qualifié et compétent.

Warnung Gerät nur von geschultem, qualifiziertem Personal installieren oder auswechseln lassen.

Avvertenza Solo personale addestrato e qualificato deve essere autorizzato ad installare o sostituire questo apparecchio.

Advarsel Kun kvalifisert personell med riktig opplæring bør montere eller bytte ut dette utstyret.

Aviso Este equipamento deverá ser instalado ou substituído apenas por pessoal devidamente treinado e qualificado.

¡Atención! Estos equipos deben ser instalados y reemplazados exclusivamente por personal técnico adecuadamente preparado y capacitado.

Varning! Denna utrustning ska endast installeras och bytas ut av utbildad och kvalificerad personal.

Copyright © 2014, Juniper Networks, Inc.

Related Documentation

- Restricted Access Area Warning on page 239
- SRX5800 Services Gateway General Safety Guidelines and Warnings on page 237
- SRX5800 Services Gateway Definition of Safety Warning Levels on page 235
- Preventing Electrostatic Discharge Damage to the SRX5800 Services Gateway on page 241
- SRX5800 Services Gateway Fire Safety Requirements and Fire Suppression Equipment on page 243

Restricted Access Area Warning



WARNING: The services gateway is intended for installation in restricted access areas. A restricted access area is an area to which access can be gained only by service personnel through the use of a special tool, lock and key, or other means of security, and which is controlled by the authority responsible for the location.

Waarschuwing Dit toestel is bedoeld voor installatie op plaatsen met beperkte toegang. Een plaats met beperkte toegang is een plaats waar toegang slechts door servicepersoneel verkregen kan worden door middel van een speciaal instrument, een slot en sleutel, of een ander veiligheidsmiddel, en welke beheerd wordt door de overheidsinstantie die verantwoordelijk is voor de locatie.

Varoitus Tämä laite on tarkoitettu asennettavaksi paikkaan, johon pääsy on rajoitettua. Paikka, johon pääsy on rajoitettua, tarkoittaa paikkaa, johon vain huoltohenkilöstö pääsee jonkin erikoistyökalun, lukkoon sopivan avaimen tai jonkin muun turvalaitteen avulla ja joka on paikasta vastuussa olevien toimivaltaisten henkilöiden valvoma.

Attention Cet appareil est à installer dans des zones d'accès réservé. Ces dernières sont des zones auxquelles seul le personnel de service peut accéder en utilisant un outil spécial, un mécanisme de verrouillage et une clé, ou tout autre moyen de sécurité. L'accès aux zones de sécurité est sous le contrôle de l'autorité responsable de l'emplacement.

Warnung Diese Einheit ist zur Installation in Bereichen mit beschränktem Zutritt vorgesehen. Ein Bereich mit beschränktem Zutritt ist ein Bereich, zu dem nur Wartungspersonal mit einem Spezialwerkzeugs, Schloß und Schlüssel oder anderer Sicherheitsvorkehrungen Zugang hat, und der von dem für die Anlage zuständigen Gremium kontrolliert wird.

Avvertenza Questa unità deve essere installata in un'area ad accesso limitato. Un'area ad accesso limitato è un'area accessibile solo a personale di assistenza tramite un'attrezzo speciale, lucchetto, o altri dispositivi di sicurezza, ed è controllata dall'autorità responsabile della zona.

Copyright © 2014, Juniper Networks, Inc.

Advarsel Denne enheten er laget for installasjon i områder med begrenset adgang. Et område med begrenset adgang gir kun adgang til servicepersonale som bruker et spesielt verktøy, lås og nøkkel, eller en annen sikkerhetsanordning, og det kontrolleres av den autoriteten som er ansvarlig for området.

Aviso Esta unidade foi concebida para instalação em áreas de acesso restrito. Uma área de acesso restrito é uma área à qual apenas tem acesso o pessoal de serviço autorizado, que possua uma ferramenta, chave e fechadura especial, ou qualquer outra forma de segurança. Esta área é controlada pela autoridade responsável pelo local.

¡Atención! Esta unidad ha sido diseñada para instalarse en áreas de acceso restringido. Área de acceso restringido significa un área a la que solamente tiene acceso el personal de servicio mediante la utilización de una herramienta especial, cerradura con llave, o algún otro medio de seguridad, y que está bajo el control de la autoridad responsable del local.

Varning! Denna enhet är avsedd för installation i områden med begränsat tillträde. Ett område med begränsat tillträde får endast tillträdas av servicepersonal med ett speciellt verktyg, lås och nyckel, eller annan säkerhetsanordning, och kontrolleras av den auktoritet som ansvarar för området.

Related Documentation

- Qualified Personnel Warning on page 238
- SRX5800 Services Gateway General Safety Guidelines and Warnings on page 237
- SRX5800 Services Gateway Definition of Safety Warning Levels on page 235
- Preventing Electrostatic Discharge Damage to the SRX5800 Services Gateway on page 241
- SRX5800 Services Gateway Fire Safety Requirements and Fire Suppression Equipment on page 243

Copyright © 2014, Juniper Networks, Inc.

Preventing Electrostatic Discharge Damage to the SRX5800 Services Gateway

Many services gateway hardware components are sensitive to damage from static electricity. Some components can be impaired by voltages as low as 30 V. You can easily generate potentially damaging static voltages whenever you handle plastic or foam packing material or if you move components across plastic or carpets. Observe the following guidelines to minimize the potential for electrostatic discharge (ESD) damage, which can cause intermittent or complete component failures:

- Always use an ESD wrist strap or ankle strap, and verify that it is in direct contact with your skin.

  CAUTION: For safety, periodically check the resistance value of the ESD strap. The measurement should be in the range of 1 to 10 Megaohms.

- When handling any component that is removed from the chassis, verify that the equipment end of your ESD strap is attached to one of the ESD points on the chassis, which are shown in Figure 102 on page 241 and Figure 103 on page 242.

Figure 102: ESD Point on Front of Services Gateway

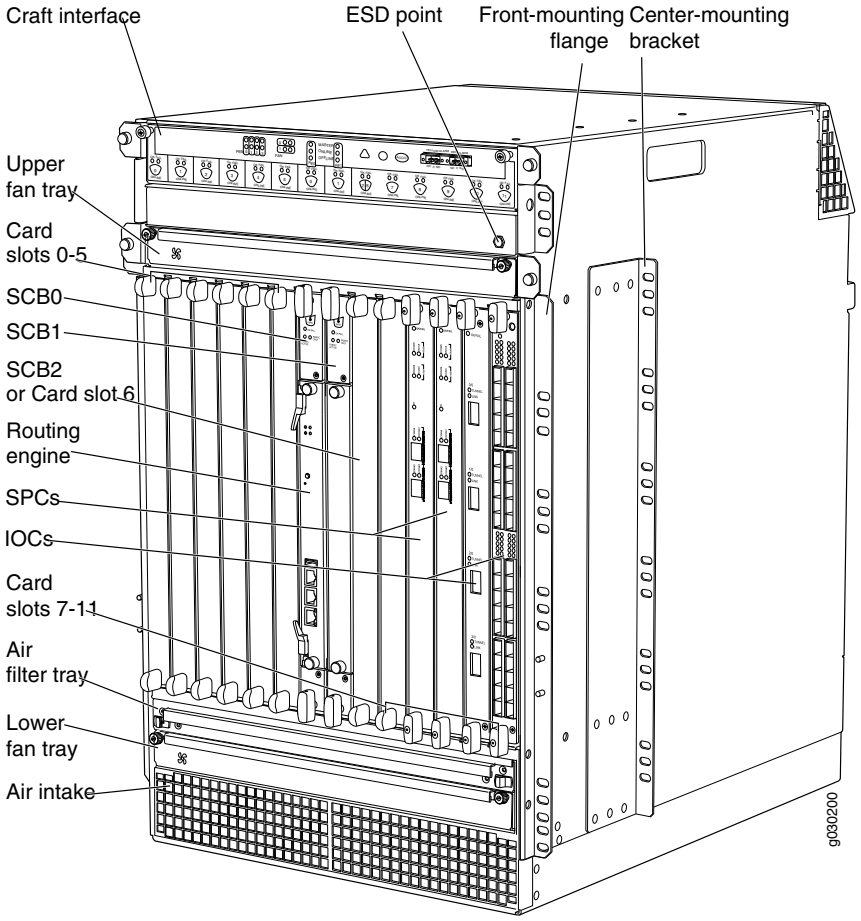

Figure 103: ESD Point on Rear of Services Gateway

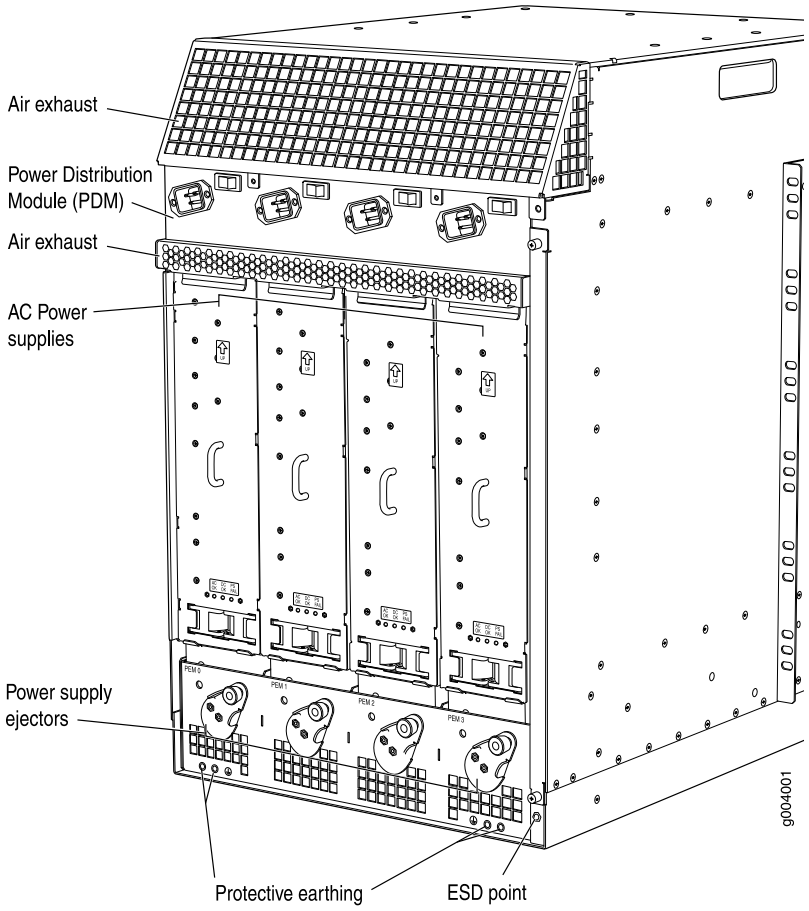

- Avoid contact between the component and your clothing. ESD voltages emitted from clothing can still damage components.
- When removing or installing a component, always place it component-side up on an antistatic surface, in an antistatic card rack, or in an electrostatic bag (see Figure 104 on page 243). If you are returning a component, place it in an electrostatic bag before packing it.

Copyright © 2014, Juniper Networks, Inc.

Figure 104: Placing a Component into an Electrostatic Bag

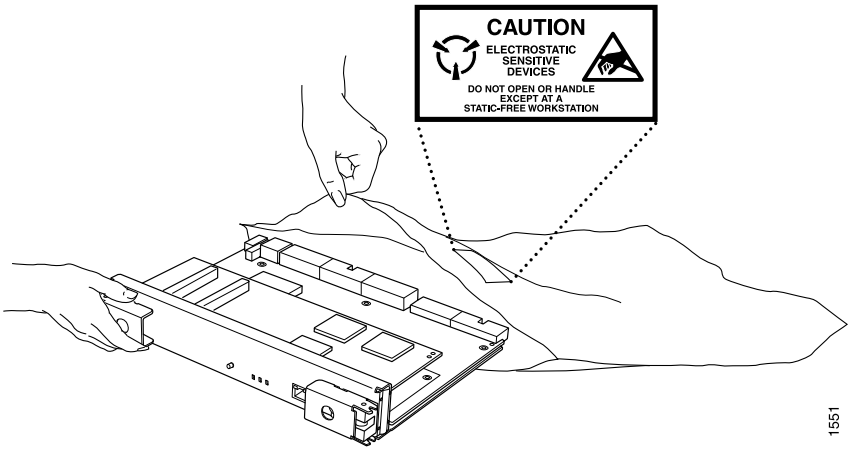

Related Documentation

- Qualified Personnel Warning on page 238
- Restricted Access Area Warning on page 239
- SRX5800 Services Gateway General Safety Guidelines and Warnings on page 237
- SRX5800 Services Gateway Definition of Safety Warning Levels on page 235
- SRX5800 Services Gateway Fire Safety Requirements and Fire Suppression Equipment on page 243

SRX5800 Services Gateway Fire Safety Requirements and Fire Suppression Equipment

In the event of a fire emergency involving services gateways and other network equipment, the safety of people is the primary concern. Establish procedures for protecting people in the event of a fire emergency, provide safety training, and properly provision fire control equipment and fire extinguishers.

In addition, establish procedures to protect your equipment in the event of a fire emergency. Juniper Networks products should be installed in an environment suitable for electronic equipment. We recommend that fire suppression equipment be available in the event of a fire in the vicinity of the equipment and that all local fire, safety, and electrical codes and ordinances be observed when installing and operating your equipment.

In the event of an electrical hazard or an electrical fire, first turn power off to the equipment at the source. Then use a Type C fire extinguisher to extinguish the fire. Type C fire extinguishers, which use noncorrosive fire retardants such as carbon dioxide (CO_2) and Halotron, are most effective for suppressing electrical fires. Type C fire extinguishers displace the oxygen from the point of combustion to eliminate the fire. For extinguishing fire on or around equipment that draws air from the environment for cooling, use this type of inert oxygen displacement extinguisher instead of an extinguisher that leave residues on equipment.

Copyright © 2014, Juniper Networks, Inc.

Do not use multipurpose Type ABC chemical fire extinguishers (dry chemical fire extinguishers) near Juniper Networks equipment. The primary ingredient in these fire extinguishers is monoammonium phosphate, which is very sticky and difficult to clean. In addition, in minute amounts of moisture, monoammonium phosphate can become highly corrosive and corrodes most metals.

Any equipment in a room in which a chemical fire extinguisher has been discharged is subject to premature failure and unreliable operation. The equipment is considered to be irreparably damaged.

NOTE: **To keep warranties effective, do not use a dry chemical fire extinguisher to control a fire at or near a Juniper Networks services gateway. If a dry chemical fire extinguisher is used, the unit is no longer eligible for coverage under a service agreement.**

We recommend that you dispose of any irreparably damaged equipment in an environmentally responsible manner.

Related Documentation

- Qualified Personnel Warning on page 238
- Restricted Access Area Warning on page 239
- SRX5800 Services Gateway General Safety Guidelines and Warnings on page 237
- SRX5800 Services Gateway Definition of Safety Warning Levels on page 235
- Preventing Electrostatic Discharge Damage to the SRX5800 Services Gateway on page 241

SRX5800 Services Gateway Installation Safety Guidelines and Warnings

- Chassis Lifting Guidelines on page 244
- Installation Instructions Warning on page 245
- Rack-Mounting Requirements and Warnings on page 246
- Ramp Warning on page 249

Chassis Lifting Guidelines

The fully configured chassis with the cable manager weighs up to 400 lb (182 kg), or 150 lb (68 kg) with components removed. Observe the following guidelines for lifting and moving the services gateway:

- Before moving the services gateway, check the Site Preparation Checklist to verify that the intended site meets the specified power, environmental, and clearance requirements.
- Do not attempt to lift a fully configured services gateway by yourself. Using a mechanical lift to maneuver the services gateway into a rack is recommended. If a lift cannot be used, a minimum of three people are required to lift the services gateway, and you must remove components from the chassis before lifting.

Copyright © 2014, Juniper Networks, Inc.

- Before lifting or moving the services gateway, disconnect all external cables.
- As when lifting any heavy object, lift most of the weight with your legs rather than your back. Keep your knees bent and your back relatively straight and avoid twisting your body as you lift. Balance the load evenly and be sure that your footing is solid.

Related Documentation

- SRX5800 Services Gateway General Safety Guidelines and Warnings on page 237
- Installation Instructions Warning on page 245
- Rack-Mounting Requirements and Warnings on page 246
- Ramp Warning on page 249

Installation Instructions Warning



WARNING: **Read the installation instructions before you connect the services gateway to a power source.**

Waarschuwing Raadpleeg de installatie-aanwijzingen voordat u het systeem met de voeding verbindt.

Varoitus Lue asennusohjeet ennen järjestelmän yhdistämistä virtalähteeseen.

Attention Avant de brancher le système sur la source d'alimentation, consulter les directives d'installation.

Warnung Lesen Sie die Installationsanweisungen, bevor Sie das System an die Stromquelle anschließen.

Avvertenza Consultare le istruzioni di installazione prima di collegare il sistema all'alimentatore.

Advarsel Les installasjonsinstruksjonene før systemet kobles til strømkilden.

Aviso Leia as instruções de instalação antes de ligar o sistema à sua fonte de energia.

¡Atención! Ver las instrucciones de instalación antes de conectar el sistema a la red de alimentación.

Varning! Läs installationsanvisningarna innan du kopplar systemet till dess strömförsörjningsenhet.

Related Documentation

- Chassis Lifting Guidelines on page 244
- SRX5800 Services Gateway General Safety Guidelines and Warnings on page 237
- Rack-Mounting Requirements and Warnings on page 246
- Ramp Warning on page 249

Copyright © 2014, Juniper Networks, Inc.

Rack-Mounting Requirements and Warnings

Ensure that the equipment rack into which the services gateway is installed is evenly and securely supported to avoid the hazardous condition that could result from uneven mechanical loading.



WARNING: To prevent bodily injury when mounting or servicing the services gateway in a rack, take the following precautions to ensure that the system remains stable. The following directives help maintain your safety:

- The services gateway must be installed into a rack that is secured to the building structure.
- The services gateway should be mounted at the bottom of the rack if it is the only unit in the rack.
- When mounting the services gateway in a partially filled rack, load the rack from the bottom to the top with the heaviest component at the bottom of the rack.
- If the rack is provided with stabilizing devices, install the stabilizers before mounting or servicing the services gateway in the rack.

Waarschuwing Om lichamelijk letsel te voorkomen wanneer u dit toestel in een rek monteert of het daar een servicebeurt geeft, moet u speciale voorzorgsmaatregelen nemen om ervoor te zorgen dat het toestel stabiel blijft. De onderstaande richtlijnen worden verstrekt om uw veiligheid te verzekeren:

- De Juniper Networks services gateway moet in een stellage worden geïnstalleerd die aan een bouwsel is verankerd.
- Dit toestel dient onderaan in het rek gemonteerd te worden als het toestel het enige in het rek is.
- Wanneer u dit toestel in een gedeeltelijk gevuld rek monteert, dient u het rek van onderen naar boven te laden met het zwaarste onderdeel onderaan in het rek.
- Als het rek voorzien is van stabiliseringshulpmiddelen, dient u de stabilisatoren te monteren voordat u het toestel in het rek monteert of het daar een servicebeurt geeft.

Varoitus Kun laite asetetaan telineeseen tai huolletaan sen ollessa telineessä, on noudatettava erityisiä varotoimia järjestelmän vakavuuden säilyttämiseksi, jotta vältytään loukkaantumiselta. Noudata seuraavia turvallisuusohjeita:

- Juniper Networks services gateway on asennettava telineeseen, joka on kiinnitetty rakennukseen.
- Jos telineessä ei ole muita laitteita, aseta laite telineen alaosaan.

Copyright © 2014, Juniper Networks, Inc.

- Jos laite asetetaan osaksi täytettyyn telineeseen, aloita kuormittaminen sen alaosasta kaikkein raskaimmalla esineellä ja siirry sitten sen yläosaan.
- Jos telinettä varten on vakaimet, asenna ne ennen laitteen asettamista telineeseen tai sen huoltamista siinä.

Attention Pour éviter toute blessure corporelle pendant les opérations de montage ou de réparation de cette unité en casier, il convient de prendre des précautions spéciales afin de maintenir la stabilité du système. Les directives ci-dessous sont destinées à assurer la protection du personnel:

- Le rack sur lequel est monté le Juniper Networks services gateway doit être fixé à la structure du bâtiment.
- Si cette unité constitue la seule unité montée en casier, elle doit être placée dans le bas.
- Si cette unité est montée dans un casier partiellement rempli, charger le casier de bas en haut en plaçant l'élément le plus lourd dans le bas.
- Si le casier est équipé de dispositifs stabilisateurs, installer les stabilisateurs avant de monter ou de réparer l'unité en casier.

Warnung Zur Vermeidung von Körperverletzung beim Anbringen oder Warten dieser Einheit in einem Gestell müssen Sie besondere Vorkehrungen treffen, um sicherzustellen, daß das System stabil bleibt. Die folgenden Richtlinien sollen zur Gewährleistung Ihrer Sicherheit dienen:

- Der Juniper Networks services gateway muß in einem Gestell installiert werden, das in der Gebäudestruktur verankert ist.
- Wenn diese Einheit die einzige im Gestell ist, sollte sie unten im Gestell angebracht werden.
- Bei Anbringung dieser Einheit in einem zum Teil gefüllten Gestell ist das Gestell von unten nach oben zu laden, wobei das schwerste Bauteil unten im Gestell anzubringen ist.
- Wird das Gestell mit Stabilisierungszubehör geliefert, sind zuerst die Stabilisatoren zu installieren, bevor Sie die Einheit im Gestell anbringen oder sie warten.

Avvertenza Per evitare infortuni fisici durante il montaggio o la manutenzione di questa unità in un supporto, occorre osservare speciali precauzioni per garantire che il sistema rimanga stabile. Le seguenti direttive vengono fornite per garantire la sicurezza personale:

- Il Juniper Networks services gateway deve essere installato in un telaio, il quale deve essere fissato alla struttura dell'edificio.
- Questa unità deve venire montata sul fondo del supporto, se si tratta dell'unica unità da montare nel supporto.

Copyright © 2014, Juniper Networks, Inc.

- Quando questa unità viene montata in un supporto parzialmente pieno, caricare il supporto dal basso all'alto, con il componente più pesante sistemato sul fondo del supporto.
- Se il supporto è dotato di dispositivi stabilizzanti, installare tali dispositivi prima di montare o di procedere alla manutenzione dell'unità nel supporto.

Advarsel Unngå fysiske skader under montering eller reparasjonsarbeid på denne enheten når den befinner seg i et kabinett. Vær nøye med at systemet er stabilt. Følgende retningslinjer er gitt for å verne om sikkerheten:

- Juniper Networks services gateway må installeres i et stativ som er forankret til bygningsstrukturen.
- Denne enheten bør monteres nederst i kabinettet hvis dette er den eneste enheten i kabinettet.
- Ved montering av denne enheten i et kabinett som er delvis fylt, skal kabinettet lastes fra bunnen og opp med den tyngste komponenten nederst i kabinettet.
- Hvis kabinettet er utstyrt med stabiliseringsutstyr, skal stabilisatorene installeres før montering eller utføring av reparasjonsarbeid på enheten i kabinettet.

Aviso Para se prevenir contra danos corporais ao montar ou reparar esta unidade numa estante, deverá tomar precauções especiais para se certificar de que o sistema possui um suporte estável. As seguintes directrizes ajudá-lo-ão a efectuar o seu trabalho com segurança:

- O Juniper Networks services gateway deverá ser instalado numa prateleira fixa à estrutura do edificio.
- Esta unidade deverá ser montada na parte inferior da estante, caso seja esta a única unidade a ser montada.
- Ao montar esta unidade numa estante parcialmente ocupada, coloque os itens mais pesados na parte inferior da estante, arrumando-os de baixo para cima.
- Se a estante possuir um dispositivo de estabilização, instale-o antes de montar ou reparar a unidade.

¡Atención! Para evitar lesiones durante el montaje de este equipo sobre un bastidor, o posteriormente durante su mantenimiento, se debe poner mucho cuidado en que el sistema quede bien estable. Para garantizar su seguridad, proceda según las siguientes instrucciones:

- El Juniper Networks services gateway debe instalarse en un bastidor fijado a la estructura del edificio.
- Colocar el equipo en la parte inferior del bastidor, cuando sea la única unidad en el mismo.

Copyright © 2014, Juniper Networks, Inc.

- Cuando este equipo se vaya a instalar en un bastidor parcialmente ocupado, comenzar la instalación desde la parte inferior hacia la superior colocando el equipo más pesado en la parte inferior.
- Si el bastidor dispone de dispositivos estabilizadores, instalar éstos antes de montar o proceder al mantenimiento del equipo instalado en el bastidor.

Varning! För att undvika kroppsskada när du installerar eller utför underhållsarbete på denna enhet på en ställning måste du vidta särskilda försiktighetsåtgärder för att försäkra dig om att systemet står stadigt. Följande riktlinjer ges för att trygga din säkerhet:

- Juniper Networks services gateway måste installeras i en ställning som är förankrad i byggnadens struktur.
- Om denna enhet är den enda enheten på ställningen skall den installeras längst ned på ställningen.
- Om denna enhet installeras på en delvis fylld ställning skall ställningen fyllas nedifrån och upp, med de tyngsta enheterna längst ned på ställningen.
- Om ställningen är försedd med stabiliseringsdon skall dessa monteras fast innan enheten installeras eller underhålls på ställningen.

Related Documentation

- Chassis Lifting Guidelines on page 244
- SRX5800 Services Gateway General Safety Guidelines and Warnings on page 237
- Installation Instructions Warning on page 245
- Ramp Warning on page 249

Ramp Warning



WARNING: When installing the services gateway, do not use a ramp inclined at more than 10 degrees.

Waarschuwing Gebruik een oprijplaat niet onder een hoek van meer dan 10 graden.

Varoitus Älä käytä sellaista kaltevaa pintaa, jonka kaltevuus ylittää 10 astetta.

Attention Ne pas utiliser une rampe dont l'inclinaison est supérieure à 10 degrés.

Warnung Keine Rampen mit einer Neigung von mehr als 10 Grad verwenden.

Avvertenza Non usare una rampa con pendenza superiore a 10 gradi.

Advarsel Bruk aldri en rampe som heller mer enn 10 grader.

Aviso Não utilize uma rampa com uma inclinação superior a 10 graus.

Copyright © 2014, Juniper Networks, Inc.

¡Atención! No usar una rampa inclinada más de 10 grados

Varning! Använd inte ramp med en lutning på mer än 10 grader.

Related Documentation

- Chassis Lifting Guidelines on page 244
- SRX5800 Services Gateway General Safety Guidelines and Warnings on page 237
- Installation Instructions Warning on page 245
- Rack-Mounting Requirements and Warnings on page 246

SRX5800 Services Gateway Laser and LED Safety Guidelines and Warnings

- General Laser Safety Guidelines on page 250
- Class 1 Laser Warning on page 251
- Class 1 LED Product Warning on page 251
- Laser Beam Warning on page 252
- Radiation from Open Port Apertures Warning on page 253

General Laser Safety Guidelines

When working around the services gateway, observe the following safety guidelines to prevent eye injury:

- Do not look into unterminated ports or at fibers that connect to unknown sources.
- Do not examine unterminated optical ports with optical instruments.
- Avoid direct exposure to the beam.



WARNING: **Unterminated optical connectors can emit invisible laser radiation. The lens in the human eye focuses all the laser power on the retina, so focusing the eye directly on a laser source—even a low-power laser—could permanently damage the eye.**

Related Documentation

- Class 1 Laser Warning on page 251
- Class 1 LED Product Warning on page 251
- Laser Beam Warning on page 252
- Radiation from Open Port Apertures Warning on page 253

Copyright © 2014, Juniper Networks, Inc.

Class 1 Laser Warning



WARNING: Class 1 laser product.

Waarschuwing Klasse-1 laser produkt.

Varoitus Luokan 1 lasertuote.

Attention Produit laser de classe I.

Warnung Laserprodukt der Klasse 1.

Avvertenza Prodotto laser di Classe 1.

Advarsel Laserprodukt av klasse 1.

Aviso Produto laser de classe 1.

¡Atención! Producto láser Clase I.

Varning! Laserprodukt av klass 1.

Related Documentation

- General Laser Safety Guidelines on page 250
- Class 1 LED Product Warning on page 251
- Laser Beam Warning on page 252
- Radiation from Open Port Apertures Warning on page 253

Class 1 LED Product Warning



WARNING: Class 1 LED product.

Waarschuwing Klasse 1 LED-product.

Varoitus Luokan 1 valodiodituote.

Attention Alarme de produit LED Class I.

Warnung Class 1 LED-Produktwarnung.

Avvertenza Avvertenza prodotto LED di Classe 1.

Advarsel LED-produkt i klasse 1.

Aviso Produto de classe 1 com LED.

¡Atención! Aviso sobre producto LED de Clase 1.

Varning! Lysdiodprodukt av klass 1.

Copyright © 2014, Juniper Networks, Inc.

Related Documentation

- General Laser Safety Guidelines on page 250
- Class 1 Laser Warning on page 251
- Laser Beam Warning on page 252
- Radiation from Open Port Apertures Warning on page 253

Laser Beam Warning



WARNING: Do not stare into the laser beam or view it directly with optical instruments.

Waarschuwing Niet in de straal staren of hem rechtstreeks bekijken met optische instrumenten.

Varoitus Älä katso säteeseen äläkä tarkastele sitä suoraan optisen laitteen avulla.

Attention Ne pas fixer le faisceau des yeux, ni l'observer directement à l'aide d'instruments optiques.

Warnung Nicht direkt in den Strahl blicken und ihn nicht direkt mit optischen Geräten prüfen.

Avvertenza Non fissare il raggio con gli occhi né usare strumenti ottici per osservarlo direttamente.

Advarsel Stirr eller se ikke direkte p strlen med optiske instrumenter.

Aviso Não olhe fixamente para o raio, nem olhe para ele directamente com instrumentos ópticos.

¡Atención! No mirar fijamente el haz ni observarlo directamente con instrumentos ópticos.

Varning! Rikta inte blicken in mot strålen och titta inte direkt på den genom optiska instrument.

Related Documentation

- General Laser Safety Guidelines on page 250
- Class 1 Laser Warning on page 251
- Class 1 LED Product Warning on page 251
- Radiation from Open Port Apertures Warning on page 253

Copyright © 2014, Juniper Networks, Inc.

Radiation from Open Port Apertures Warning



WARNING: Because invisible radiation might be emitted from the aperture of the port when no fiber cable is connected, avoid exposure to radiation and do not stare into open apertures.

Waarschuwing Aangezien onzichtbare straling vanuit de opening van de poort kan komen als er geen fiberkabel aangesloten is, dient blootstelling aan straling en het kijken in open openingen vermeden te worden.

Varoitus Koska portin aukosta voi emittoitua näkymätöntä säteilyä, kun kuitukaapelia ei ole kytkettynä, vältä säteilylle altistumista äläkä katso avoimiin aukkoihin.

Attention Des radiations invisibles à l'il nu pouvant traverser l'ouverture du port lorsqu'aucun câble en fibre optique n'y est connecté, il est recommandé de ne pas regarder fixement l'intérieur de ces ouvertures.

Warnung Aus der Port-Öffnung können unsichtbare Strahlen emittieren, wenn kein Glasfaserkabel angeschlossen ist. Vermeiden Sie es, sich den Strahlungen auszusetzen, und starren Sie nicht in die Öffnungen!

Avvertenza Quando i cavi in fibra non sono inseriti, radiazioni invisibili possono essere emesse attraverso l'apertura della porta. Evitate di esporvi alle radiazioni e non guardate direttamente nelle aperture.

Advarsel Unngå utsettelse for stråling, og stirr ikke inn i åpninger som er åpne, fordi usynlig stråling kan emiteres fra portens åpning når det ikke er tilkoblet en fiberkabel.

Aviso Dada a possibilidade de emissão de radiação invisível através do orifício da via de acesso, quando esta não tiver nenhum cabo de fibra conectado, deverá evitar a exposição à radiação e não deverá olhar fixamente para orifícios que se encontrarem a descoberto.

¡Atención! Debido a que la apertura del puerto puede emitir radiación invisible cuando no existe un cable de fibra conectado, evite mirar directamente a las aperturas para no exponerse a la radiación.

Varning! Osynlig strålning kan avges från en portöppning utan ansluten fiberkabel och du bör därför undvika att bli utsatt för strålning genom att inte stirra in i oskyddade öppningar.

Related Documentation

- General Laser Safety Guidelines on page 250
- Class 1 Laser Warning on page 251
- Class 1 LED Product Warning on page 251
- Laser Beam Warning on page 252

Copyright © 2014, Juniper Networks, Inc.

SRX5800 Services Gateway Maintenance and Operational Safety Guidelines and Warnings

- Battery Handling Warning on page 254
- Jewelry Removal Warning on page 255
- Lightning Activity Warning on page 256
- Operating Temperature Warning on page 257
- Product Disposal Warning on page 258

Battery Handling Warning



WARNING: Replacing the battery incorrectly might result in an explosion. Replace the battery only with the same or equivalent type recommended by the manufacturer. Dispose of used batteries according to the manufacturer's instructions.

Waarschuwing Er is ontploffingsgevaar als de batterij verkeerd vervangen wordt. Vervang de batterij slechts met hetzelfde of een equivalent type dat door de fabrikant aanbevolen is. Gebruikte batterijen dienen overeenkomstig fabrieksvoorschriften weggeworpen te worden.

Varoitus Räjähdyksen vaara, jos akku on vaihdettu väärään akkuun. Käytä vaihtamiseen ainoastaan saman- tai vastaavantyyppistä akkua, joka on valmistajan suosittelema. Hävitä käytetyt akut valmistajan ohjeiden mukaan.

Attention Danger d'explosion si la pile n'est pas remplacée correctement. Ne la remplacer que par une pile de type semblable ou équivalent, recommandée par le fabricant. Jeter les piles usagées conformément aux instructions du fabricant.

Warnung Bei Einsetzen einer falschen Batterie besteht Explosionsgefahr. Ersetzen Sie die Batterie nur durch den gleichen oder vom Hersteller empfohlenen Batterietyp. Entsorgen Sie die benutzten Batterien nach den Anweisungen des Herstellers.

Avvertenza Pericolo di esplosione se la batteria non è installata correttamente. Sostituire solo con una di tipo uguale o equivalente, consigliata dal produttore. Eliminare le batterie usate secondo le istruzioni del produttore.

Advarsel Det kan være fare for eksplosjon hvis batteriet skiftes på feil måte. Skift kun med samme eller tilsvarende type som er anbefalt av produsenten. Kasser brukte batterier i henhold til produsentens instruksjoner.

Aviso Existe perigo de explosão se a bateria for substituída incorrectamente. Substitua a bateria por uma bateria igual ou de um tipo equivalente recomendado pelo fabricante. Destrua as baterias usadas conforme as instruções do fabricante.

Copyright © 2014, Juniper Networks, Inc.

¡Atención! Existe peligro de explosión si la batería se reemplaza de manera incorrecta. Reemplazar la batería exclusivamente con el mismo tipo o el equivalente recomendado por el fabricante. Desechar las baterías gastadas según las instrucciones del fabricante.

Varning! Explosionsfara vid felaktigt batteribyte. Ersätt endast batteriet med samma batterityp som rekommenderas av tillverkaren eller motsvarande. Följ tillverkarens anvisningar vid kassering av använda batterier.

Related Documentation

- Jewelry Removal Warning on page 255
- Lightning Activity Warning on page 256
- Operating Temperature Warning on page 257
- Product Disposal Warning on page 258

Jewelry Removal Warning



WARNING: **Before working on equipment that is connected to power lines, remove jewelry, including rings, necklaces, and watches. Metal objects heat up when connected to power and ground and can cause serious burns or weld the metal object to the terminals.**

Waarschuwing Alvorens aan apparatuur te werken die met elektrische leidingen is verbonden, sieraden (inclusief ringen, kettingen en horloges) verwijderen. Metalen voorwerpen worden warm wanneer ze met stroom en aarde zijn verbonden, en kunnen ernstige brandwonden veroorzaken of het metalen voorwerp aan de aansluitklemmen lassen.

Varoitus Ennen kuin työskentelet voimavirtajohtoihin kytkettyjen laitteiden parissa, ota pois kaikki korut (sormukset, kaulakorut ja kellot mukaan lukien). Metalliesineet kuumenevat, kun ne ovat yhteydessä sähkövirran ja maan kanssa, ja ne voivat aiheuttaa vakavia palovammoja tai hitsata metalliesineet kiinni liitäntänapoihin.

Attention Avant d'accéder à cet équipement connecté aux lignes électriques, ôter tout bijou (anneaux, colliers et montres compris). Lorsqu'ils sont branchés à l'alimentation et reliés à la terre, les objets métalliques chauffent, ce qui peut provoquer des blessures graves ou souder l'objet métallique aux bornes.

Warnung Vor der Arbeit an Geräten, die an das Netz angeschlossen sind, jeglichen Schmuck (einschließlich Ringe, Ketten und Uhren) abnehmen. Metallgegenstände erhitzen sich, wenn sie an das Netz und die Erde angeschlossen werden, und können schwere Verbrennungen verursachen oder an die Anschlußklemmen angeschweißt werden.

Avvertenza Prima di intervenire su apparecchiature collegate alle linee di alimentazione, togliersi qualsiasi monile (inclusi anelli, collane, braccialetti

Copyright © 2014, Juniper Networks, Inc.

ed orologi). Gli oggetti metallici si riscaldano quando sono collegati tra punti di alimentazione e massa: possono causare ustioni gravi oppure il metallo può saldarsi ai terminali.

Advarsel Fjern alle smykker (inkludert ringer, halskjeder og klokker) før du skal arbeide på utstyr som er koblet til kraftledninger. Metallgjenstander som er koblet til kraftledninger og jord blir svært varme og kan forårsake alvorlige brannskader eller smelte fast til polene.

Aviso Antes de trabalhar em equipamento que esteja ligado a linhas de corrente, retire todas as jóias que estiver a usar (incluindo anéis, fios e relógios). Os objectos metálicos aquecerão em contacto com a corrente e em contacto com a ligação à terra, podendo causar queimaduras graves ou ficarem soldados aos terminais.

¡Atención! Antes de operar sobre equipos conectados a líneas de alimentación, quitarse las joyas (incluidos anillos, collares y relojes). Los objetos de metal se calientan cuando se conectan a la alimentación y a tierra, lo que puede ocasionar quemaduras graves o que los objetos metálicos queden soldados a los bornes.

Varning! Tag av alla smycken (inklusive ringar, halsband och armbandsur) innan du arbetar på utrustning som är kopplad till kraftledningar. Metallobjekt hettas upp när de kopplas ihop med ström och jord och kan förorsaka allvarliga brännskador; metallobjekt kan också sammansvetsas med kontakterna.

Related Documentation

- Battery Handling Warning on page 254
- Lightning Activity Warning on page 256
- Operating Temperature Warning on page 257
- Product Disposal Warning on page 258

Lightning Activity Warning



WARNING: Do not work on the system or connect or disconnect cables during periods of lightning activity.

Waarschuwing Tijdens onweer dat gepaard gaat met bliksem, dient u niet aan het systeem te werken of kabels aan te sluiten of te ontkoppelen.

Varoitus Älä työskentele järjestelmän parissa äläkä yhdistä tai irrota kaapeleita ukkosilmalla.

Attention Ne pas travailler sur le système ni brancher ou débrancher les câbles pendant un orage.

Copyright © 2014, Juniper Networks, Inc.

Warnung Arbeiten Sie nicht am System und schließen Sie keine Kabel an bzw. trennen Sie keine ab, wenn es gewittert.

Avvertenza Non lavorare sul sistema o collegare oppure scollegare i cavi durante un temporale con fulmini.

Advarsel Utfør aldri arbeid på systemet, eller koble kabler til eller fra systemet når det tordner eller lyner.

Aviso Não trabalhe no sistema ou ligue e desligue cabos durante períodos de mau tempo (trovoada).

¡Atención! No operar el sistema ni conectar o desconectar cables durante el transcurso de descargas eléctricas en la atmósfera.

Varning! Vid åska skall du aldrig utföra arbete på systemet eller ansluta eller koppla loss kablar.

Related Documentation

- Battery Handling Warning on page 254
- Jewelry Removal Warning on page 255
- Operating Temperature Warning on page 257
- Product Disposal Warning on page 258

Operating Temperature Warning



WARNING: To prevent the services gateway from overheating, do not operate it in an area that exceeds the maximum recommended ambient temperature of 104°F (40°C). To prevent airflow restriction, allow at least 6 in. (15.2 cm) of clearance around the ventilation openings.

Waarschuwing Om te voorkomen dat welke services gateway van de Juniper Networks services gateway dan ook oververhit raakt, dient u deze niet te bedienen op een plaats waar de maximale aanbevolen omgevingstemperatuur van 40°C wordt overschreden. Om te voorkomen dat de luchtstroom wordt beperkt, dient er minstens 15,2 cm speling rond de ventilatie-openingen te zijn.

Varoitus Ettei Juniper Networks services gateway-sarjan reititin ylikuumentuisi, sitä ei saa käyttää tilassa, jonka lämpötila ylittää korkeimman suositellun ympäristölämpötilan 40°C. Ettei ilmanvaihto estyisi, tuuletusaukkojen ympärille on jätettävä ainakin 15,2 cm tilaa.

Attention Pour éviter toute surchauffe des routeurs de la gamme Juniper Networks services gateway, ne l'utilisez pas dans une zone où la température ambiante est supérieure à 40°C. Pour permettre un flot d'air constant, dégagez un espace d'au moins 15,2 cm autour des ouvertures de ventilations.

Copyright © 2014, Juniper Networks, Inc.

Warnung Um einen services gateway der services gateway vor Überhitzung zu schützen, darf dieser nicht in einer Gegend betrieben werden, in der die Umgebungstemperatur das empfohlene Maximum von 40°C überschreitet. Um Lüftungsverschluß zu verhindern, achten Sie darauf, daß mindestens 15,2 cm lichter Raum um die Lüftungsöffnungen herum frei bleibt.

Avvertenza Per evitare il surriscaldamento dei services gateway, non adoperateli in un locale che ecceda la temperatura ambientale massima di 40°C. Per evitare che la circolazione dell'aria sia impedita, lasciate uno spazio di almeno 15.2 cm di fronte alle aperture delle ventole.

Advarsel Unngå overoppheting av eventuelle rutere i Juniper Networks services gateway Disse skal ikke brukes på steder der den anbefalte maksimale omgivelsestemperaturen overstiger 40°C (104°F). Sørg for at klaringen rundt lufteåpningene er minst 15,2 cm (6 tommer) for å forhindre nedsatt luftsirkulasjon.

Aviso Para evitar o sobreaquecimento do encaminhador Juniper Networks services gateway, não utilize este equipamento numa área que exceda a temperatura máxima recomendada de 40°C. Para evitar a restrição à circulação de ar, deixe pelo menos um espaço de 15,2 cm à volta das aberturas de ventilação.

¡Atención! Para impedir que un encaminador de la serie Juniper Networks services gateway se recaliente, no lo haga funcionar en un área en la que se supere la temperatura ambiente máxima recomendada de 40°C. Para impedir la restricción de la entrada de aire, deje un espacio mínimo de 15,2 cm alrededor de las aperturas para ventilación.

Varning! Förhindra att en Juniper Networks services gateway överhettas genom att inte använda den i ett område där den maximalt rekommenderade omgivningstemperaturen på 40°C överskrids. Förhindra att luftcirkulationen inskränks genom att se till att det finns fritt utrymme på minst 15,2 cm omkring ventilationsöppningarna.

Related Documentation

- Battery Handling Warning on page 254
- Jewelry Removal Warning on page 255
- Lightning Activity Warning on page 256
- Product Disposal Warning on page 258

Product Disposal Warning



WARNING: Disposal of this product must be handled according to all national laws and regulations.

Copyright © 2014, Juniper Networks, Inc.

Waarschuwing Dit produkt dient volgens alle landelijke wetten en voorschriften te worden afgedankt.

Varoitus Tämän tuotteen lopullisesta hävittämisestä tulee huolehtia kaikkia valtakunnallisia lakeja ja säännöksiä noudattaen.

Attention La mise au rebut définitive de ce produit doit être effectuée conformément à toutes les lois et réglementations en vigueur.

Warnung Dieses Produkt muß den geltenden Gesetzen und Vorschriften entsprechend entsorgt werden.

Avvertenza L'eliminazione finale di questo prodotto deve essere eseguita osservando le normative italiane vigenti in materia

Advarsel Endelig disponering av dette produktet må skje i henhold til nasjonale lover og forskrifter.

Aviso A descartagem final deste produto deverá ser efectuada de acordo com os regulamentos e a legislação nacional.

¡Atención! El desecho final de este producto debe realizarse según todas las leyes y regulaciones nacionales

Varning! Slutlig kassering av denna produkt bör skötas i enlighet med landets alla lagar och föreskrifter.

Related Documentation

- Battery Handling Warning on page 254
- Jewelry Removal Warning on page 255
- Lightning Activity Warning on page 256
- Operating Temperature Warning on page 257

SRX5800 Services Gateway Electrical Safety Guidelines and Warnings

- In Case of Electrical Accident on page 259
- General Electrical Safety Guidelines and Warnings on page 260
- DC Power Electrical Safety Guidelines and Warnings on page 264

In Case of Electrical Accident

If an electrical accident results in an injury, take the following actions in this order:

1. Use caution. Be aware of potentially hazardous conditions that could cause further injury.
2. Disconnect power from the services gateway.

Copyright © 2014, Juniper Networks, Inc.

3. If possible, send another person to get medical aid. Otherwise, assess the condition of the victim, then call for help.

Related Documentation

- General Electrical Safety Guidelines and Warnings on page 260
- DC Power Electrical Safety Guidelines and Warnings on page 264
- SRX5800 Services Gateway Agency Approvals on page 270

General Electrical Safety Guidelines and Warnings

- Install the services gateway in compliance with the following local, national, or international electrical codes:
  - United States—National Fire Protection Association (NFPA 70), United States National Electrical Code
  - Canada—Canadian Electrical Code, Part 1, CSA C22.1
  - Other countries—International Electromechanical Commission (IEC) 60364, Part 1 through Part 7
  - Evaluated to the TN power system
- Locate the emergency power-off switch for the room in which you are working so that if an electrical accident occurs, you can quickly turn off the power.
- Do not work alone if potentially hazardous conditions exist anywhere in your workspace.
- Never assume that power is disconnected from a circuit. Always check the circuit before starting to work.
- Carefully look for possible hazards in your work area, such as moist floors, ungrounded power extension cords, and missing safety grounds.
- Operate the services gateway within marked electrical ratings and product usage instructions.
- For the services gateway and peripheral equipment to function safely and correctly, use the cables and connectors specified for the attached peripheral equipment, and make certain they are in good condition.

Grounded Equipment Warning



WARNING: **The services gateway is intended to be grounded. Ensure that the services gateway is connected to earth ground during normal use.**

Waarschuwing Deze apparatuur hoort geaard te worden Zorg dat de host-computer tijdens normaal gebruik met aarde is verbonden.

Varoitus Tämä laitteisto on tarkoitettu maadoitettavaksi. Varmista, että isäntälaite on yhdistetty maahan normaalikäytön aikana.

Copyright © 2014, Juniper Networks, Inc.

Attention Cet équipement doit être relié à la terre. S'assurer que l'appareil hôte est relié à la terre lors de l'utilisation normale.

Warnung Dieses Gerät muß geerdet werden. Stellen Sie sicher, daß das Host-Gerät während des normalen Betriebs an Erde gelegt ist.

Avvertenza Questa apparecchiatura deve essere collegata a massa. Accertarsi che il dispositivo host sia collegato alla massa di terra durante il normale utilizzo.

Advarsel Dette utstyret skal jordes. Forviss deg om vertsterminalen er jordet ved normalt bruk.

Aviso Este equipamento deverá estar ligado à terra. Certifique-se que o host se encontra ligado à terra durante a sua utilização normal.

¡Atención! Este equipo debe conectarse a tierra. Asegurarse de que el equipo principal esté conectado a tierra durante el uso normal.

Varning! Denna utrustning är avsedd att jordas. Se till att värdenheten är jordad vid normal användning.

Midplane Energy Hazard Warning



WARNING: High levels of electrical energy are distributed across the services gateway midplane. Be careful not to contact the midplane connectors, or any component connected to the midplane, with any metallic object while servicing components installed in the services gateway.

Multiple Power Supplies Disconnection Warning



WARNING: The services gateway has more than one power supply connection. All connections must be removed completely to remove power from the unit completely.

Waarschuwing Deze eenheid heeft meer dan één stroomtoevoerverbinding; alle verbindingen moeten volledig worden verwijderd om de stroom van deze eenheid volledig te verwijderen.

Varoitus Tässä laitteessa on useampia virtalähdekytkentöjä. Kaikki kytkennät on irrotettava kokonaan, jotta virta poistettaisiin täysin laitteesta.

Attention Cette unité est équipée de plusieurs raccordements d'alimentation. Pour supprimer tout courant électrique de l'unité, tous les cordons d'alimentation doivent être débranchés.

Copyright © 2014, Juniper Networks, Inc.

Warnung Diese Einheit verfügt über mehr als einen Stromanschluß; um Strom gänzlich von der Einheit fernzuhalten, müssen alle Stromzufuhren abgetrennt sein.

Avvertenza Questa unità ha più di una connessione per alimentatore elettrico; tutte le connessioni devono essere completamente rimosse per togliere l'elettricità dall'unità.

Advarsel Denne enheten har mer enn én strømtilkobling. Alle tilkoblinger må kobles helt fra for å eliminere strøm fra enheten.

Aviso Este dispositivo possui mais do que uma conexão de fonte de alimentação de energia; para poder remover a fonte de alimentação de energia, deverão ser desconectadas todas as conexões existentes.

¡Atención! Esta unidad tiene más de una conexión de suministros de alimentación; para eliminar la alimentación por completo, deben desconectarse completamente todas las conexiones.

Varning! Denna enhet har mer än en strömförsörjningsanslutning; alla anslutningar måste vara helt avlägsnade innan strömtillförseln till enheten är fullständigt bruten.

Power Disconnection Warning



WARNING: Before working on the services gateway or near power supplies, unplug the power cord from an AC-powered services gateway; switch off the power at the circuit breaker on a DC-powered services gateway.

Waarschuwing Voordat u aan een frame of in de nabijheid van voedingen werkt, dient u bij wisselstroom toestellen de stekker van het netsnoer uit het stopcontact te halen; voor gelijkstroom toestellen dient u de stroom uit te schakelen bij de stroomverbreker.

Varoitus Kytke irti vaihtovirtalaitteiden virtajohto ja katkaise tasavirtalaitteiden virta suojakytkimellä, ennen kuin teet mitään asennuspohjalle tai työskentelet virtalähteiden läheisyydessä.

Attention Avant de travailler sur un châssis ou à proximité d'une alimentation électrique, débrancher le cordon d'alimentation des unités en courant alternatif; couper l'alimentation des unités en courant continu au niveau du disjoncteur.

Warnung Bevor Sie an einem Chassis oder in der Nähe von Netzgeräten arbeiten, ziehen Sie bei Wechselstromeinheiten das Netzkabel ab bzw. schalten Sie bei Gleichstromeinheiten den Strom am Unterbrecher ab.

Copyright © 2014, Juniper Networks, Inc.

Avvertenza Prima di lavorare su un telaio o intorno ad alimentatori, scollegare il cavo di alimentazione sulle unità CA; scollegare l'alimentazione all'interruttore automatico sulle unità CC.

Advarsel Før det utføres arbeid på kabinettet eller det arbeides i nærheten av strømforsyningsenheter, skal strømledningen trekkes ut p vekselstrømsenheter og strømmen kobles fra ved strømbryteren på likestrømsenheter.

Aviso Antes de trabalhar num chassis, ou antes de trabalhar perto de unidades de fornecimento de energia, desligue o cabo de alimentação nas unidades de corrente alternada; desligue a corrente no disjuntor nas unidades de corrente contínua.

¡Atención! Antes de manipular el chasis de un equipo o trabajar cerca de una fuente de alimentación, desenchufar el cable de alimentación en los equipos de corriente alterna (CA); cortar la alimentación desde el interruptor automático en los equipos de corriente continua (CC).

Varning! Innan du arbetar med ett chassi eller nära strömförsörjningsenheter skall du för växelströmsenheter dra ur nätsladden och för likströmsenheter bryta strömmen vid överspänningsskyddet.

TN Power Warning



WARNING: The services gateway is designed to work with TN power systems.

Waarschuwing Het apparaat is ontworpen om te functioneren met TN energiesystemen.

Varoitus Koje on suunniteltu toimimaan TN-sähkövoimajärjestelmien yhteydessä.

Attention Ce dispositif a été conçu pour fonctionner avec des systèmes d'alimentation TN.

Warnung Das Gerät ist für die Verwendung mit TN-Stromsystemen ausgelegt.

Avvertenza Il dispositivo è stato progettato per l'uso con sistemi di alimentazione TN.

Advarsel Utstyret er utfomet til bruk med TN-strømsystemer.

Aviso O dispositivo foi criado para operar com sistemas de corrente TN.

¡Atención! El equipo está diseñado para trabajar con sistemas de alimentación tipo TN.

Varning! Enheten är konstruerad för användning tillsammans med elkraftssystem av TN-typ.

Copyright © 2014, Juniper Networks, Inc.

Copper Conductors Warning



WARNING: Use copper conductors only.

Waarschuwing Gebruik alleen koperen geleiders.

Varoitus Käytä vain kuparijohtimia.

Attention Utilisez uniquement des conducteurs en cuivre.

Warnung Verwenden Sie ausschließlich Kupferleiter.

Avvertenza Usate unicamente dei conduttori di rame.

Advarsel Bruk bare kobberledninger.

Aviso Utilize apenas fios condutores de cobre.

¡Atención! Emplee sólo conductores de cobre.

Varning! Använd endast ledare av koppar.

Related Documentation

- In Case of Electrical Accident on page 259
- DC Power Electrical Safety Guidelines and Warnings on page 264
- SRX5800 Services Gateway Agency Approvals on page 270

DC Power Electrical Safety Guidelines and Warnings

When working with DC-powered equipment, observe the following guidelines and warnings:

- DC Power Electrical Safety Guidelines
- DC Power Disconnection Warning
- DC Power Grounding Requirements and Warning
- DC Power Wiring Sequence Warning
- DC Power Wiring Terminations Warning

DC Power Electrical Safety Guidelines

The following electrical safety guidelines apply to a DC-powered Services Gateway:

Copyright © 2014, Juniper Networks, Inc.

- A DC-powered Services Gateway is equipped with a DC terminal block that is rated for the power requirements of a maximally configured Services Gateway. To supply sufficient power, terminate the DC input wiring on a facility DC source capable of supplying at least 58 A @ –48 VDC for the system, or at least 32 A @ –48 VDC for each power supply. We recommend that the 48 VDC facility DC source be equipped with a circuit breaker rated at 40 A (–48 VDC) minimum, or as required by local code. Incorporate an easily accessible disconnect device into the facility wiring. In the United States and Canada, the –48 VDC facility should be equipped with a circuit breaker rated a minimum of 125% of the power provisioned for the input in accordance with the National Electrical Code in the US and the Canadian Electrical Code in Canada. Be sure to connect the ground wire or conduit to a solid office (earth) ground. A closed loop ring is recommended for terminating the ground conductor at the ground stud.
- Run two wires from the circuit breaker box to a source of 48 VDC. Use appropriate gauge wire to handle up to 50 A.
- A DC-powered Services Gateway that is equipped with a DC terminal block is intended only for installation in a restricted access location. In the United States, a restricted access area is one in accordance with Articles 110-16, 110-17, and 110-18 of the National Electrical Code ANSI/NFPA 70.



NOTE: Primary overcurrent protection is provided by the building circuit breaker. This breaker should protect against excess currents, short circuits, and earth faults in accordance with NEC ANSI/NFPA70.

- Ensure that the polarity of the DC input wiring is correct. Under certain conditions, connections with reversed polarity might trip the primary circuit breaker or damage the equipment.
- For personal safety, connect the green and yellow wire to safety (earth) ground at both the Services Gateway and the supply side of the DC wiring.
- The marked input voltage of –48 VDC for a DC-powered Services Gateway is the nominal voltage associated with the battery circuit, and any higher voltages are only to be associated with float voltages for the charging function.
- Because the Services Gateway is a positive ground system, you must connect the positive lead to the terminal labeled **RETURN**, the negative lead to the terminal labeled **–48V**, and the earth ground to the chassis grounding points.

DC Power Disconnection Warning



WARNING: Before performing any of the following procedures, ensure that power is removed from the DC circuit. To ensure that all power is off, locate the circuit breaker on the panel board that services the DC circuit, switch the circuit breaker to the OFF position, and tape the switch handle of the circuit breaker in the OFF position.

Waarschuwing Voordat u een van de onderstaande procedures uitvoert, dient u te controleren of de stroom naar het gelijkstroom circuit uitgeschakeld

Copyright © 2014, Juniper Networks, Inc.

is. Om u ervan te verzekeren dat alle stroom UIT is geschakeld, kiest u op het schakelbord de stroomverbreker die het gelijkstroom circuit bedient, draait de stroomverbreker naar de UIT positie en plakt de schakelaarhendel van de stroomverbreker met plakband in de UIT positie vast.

Varoitus Varmista, että tasavirtapiirissä ei ole virtaa ennen seuraavien toimenpiteiden suorittamista. Varmistaaksesi, että virta on KATKAISTU täysin, paikanna tasavirrasta huolehtivassa kojetaulussa sijaitseva suojakytkin, käännä suojakytkin KATKAISTU-asentoon ja teippaa suojakytkimen varsi niin, että se pysyy KATKAISTU-asennossa.

Attention Avant de pratiquer l'une quelconque des procédures ci-dessous, vérifier que le circuit en courant continu n'est plus sous tension. Pour en être sûr, localiser le disjoncteur situé sur le panneau de service du circuit en courant continu, placer le disjoncteur en position fermée (OFF) et, à l'aide d'un ruban adhésif, bloquer la poignée du disjoncteur en position OFF.

Warnung Vor Ausführung der folgenden Vorgänge ist sicherzustellen, daß die Gleichstromschaltung keinen Strom erhält. Um sicherzustellen, daß sämtlicher Strom abgestellt ist, machen Sie auf der Schalttafel den Unterbrecher für die Gleichstromschaltung ausfindig, stellen Sie den Unterbrecher auf AUS, und kleben Sie den Schaltergriff des Unterbrechers mit Klebeband in der AUS-Stellung fest.

Avvertenza Prima di svolgere una qualsiasi delle procedure seguenti, verificare che il circuito CC non sia alimentato. Per verificare che tutta l'alimentazione sia scollegata (OFF), individuare l'interruttore automatico sul quadro strumenti che alimenta il circuito CC, mettere l'interruttore in posizione OFF e fissarlo con nastro adesivo in tale posizione.

Advarsel Før noen av disse prosedyrene utføres, kontroller at strømmen er frakoblet likestrømkretsen. Sørg for at all strøm er slått AV. Dette gjøres ved å lokalisere strømbryteren på brytertavlen som betjener likestrømkretsen, slå strømbryteren AV og teipe bryterhåndtaket på strømbryteren i AV-stilling.

Aviso Antes de executar um dos seguintes procedimentos, certifique-se que desligou a fonte de alimentação de energia do circuito de corrente contínua. Para se assegurar que toda a corrente foi DESLIGADA, localize o disjuntor no painel que serve o circuito de corrente contínua e coloque-o na posição OFF (Desligado), segurando nessa posição a manivela do interruptor do disjuntor com fita isoladora.

¡Atención! Antes de proceder con los siguientes pasos, comprobar que la alimentación del circuito de corriente continua (CC) esté cortada (OFF). Para asegurarse de que toda la alimentación esté cortada (OFF), localizar el interruptor automático en el panel que alimenta al circuito de corriente continua, cambiar el interruptor automático a la posición de Apagado (OFF), y sujetar con cinta la palanca del interruptor automático en posición de Apagado (OFF).

Copyright © 2014, Juniper Networks, Inc.

Varning! Innan du utför någon av följande procedurer måste du kontrollera att strömförsörjningen till likströmskretsen är bruten. Kontrollera att all strömförsörjning är BRUTEN genom att slå AV det överspänningsskydd som skyddar likströmskretsen och tejpa fast överspänningsskyddets omkopplare i FRÅN-läget.

DC Power Grounding Requirements and Warning

An insulated grounding conductor that is identical in size to the grounded and ungrounded branch circuit supply conductors, but is identifiable by green and yellow stripes, is installed as part of the branch circuit that supplies the unit. The grounding conductor is a separately derived system at the supply transformer or motor generator set.



WARNING: When installing the Services Gateway, the ground connection must always be made first and disconnected last.

Waarschuwing Bij de installatie van het toestel moet de aardverbinding altijd het eerste worden gemaakt en het laatste worden losgemaakt.

Varoitus Laitetta asennettaessa on maahan yhdistäminen aina tehtävä ensiksi ja maadoituksen irti kytkeminen viimeiseksi.

Attention Lors de l'installation de l'appareil, la mise à la terre doit toujours être connectée en premier et déconnectée en dernier.

Warnung Der Erdanschluß muß bei der Installation der Einheit immer zuerst hergestellt und zuletzt abgetrennt werden.

Avvertenza In fase di installazione dell'unità, eseguire sempre per primo il collegamento a massa e disconnetterlo per ultimo.

Advarsel Når enheten installeres, må jordledningen alltid tilkobles først og frakobles sist.

Aviso Ao instalar a unidade, a ligação à terra deverá ser sempre a primeira a ser ligada, e a última a ser desligada.

¡Atención! Al instalar el equipo, conectar la tierra la primera y desconectarla la última.

Varning! Vid installation av enheten måste jordledningen alltid anslutas först och kopplas bort sist.

DC Power Wiring Sequence Warning



WARNING: Wire the DC power supply using the appropriate lugs. When connecting power, the proper wiring sequence is ground to ground, +RTN to +RTN, then –48 V to –48 V. When disconnecting power, the proper wiring

Copyright © 2014, Juniper Networks, Inc.

sequence is –48 V to –48 V, +RTN to +RTN, then ground to ground. Note that the ground wire should always be connected first and disconnected last.

Waarschuwing De juiste bedradingsvolgorde verbonden is aarde naar aarde, +RTN naar +RTN, en –48 V naar – 48 V. De juiste bedradingsvolgorde losgemaakt is en –48 V naar – 48 V, +RTN naar +RTN, aarde naar aarde.

Varoitus Oikea yhdistettava kytkentajarjestys on maajohto maajohtoon, +RTN varten +RTN, –48 V varten – 48 V. Oikea irrotettava kytkentajarjestys on –48 V varten – 48 V, +RTN varten +RTN, maajohto maajohtoon.

Attention Câblez l'approvisionnement d'alimentation CC En utilisant les crochets appropriés à l'extrémité de câblage. En reliant la puissance, l'ordre approprié de câblage est rectifié pour rectifier, +RTN à +RTN, puis –48 V à –48 V. En débranchant la puissance, l'ordre approprié de câblage est –48 V à –48 V, +RTN à +RTN, a alors rectifié pour rectifier. Notez que le fil de masse devrait toujours être relié d'abord et débranché pour la dernière fois. Notez que le fil de masse devrait toujours être relié d'abord et débranché pour la dernière fois.

Warnung Die Stromzufuhr ist nur mit geeigneten Ringösen an das DC Netzteil anzuschliessen. Die richtige Anschlusssequenz ist: Erdanschluss zu Erdanschluss, +RTN zu +RTN und dann –48V zu –48V. Die richtige Sequenz zum Abtrennen der Stromversorgung ist –48V zu –48V, +RTN zu +RTN und dann Erdanschluss zu Erdanschluss. Es ist zu beachten dass der Erdanschluss immer zuerst angeschlossen und als letztes abgetrennt wird.

Avvertenza Mostra la morsettiera dell alimentatore CC. Cablare l'alimentatore CC usando i connettori adatti all'estremità del cablaggio, come illustrato. La corretta sequenza di cablaggio è da massa a massa, da positivo a positivo (da linea ad L) e da negativo a negativo (da neutro a N). Tenere presente che il filo di massa deve sempre venire collegato per primo e scollegato per ultimo.

Advarsel Riktig tilkoples tilkoplingssekvens er jord til jord, +RTN til +RTN, –48 V til – 48 V. Riktig frakoples tilkoplingssekvens er –48 V til – 48 V, +RTN til +RTN, jord til jord.

Aviso Ate con alambre la fuente de potencia cc Usando los terminales apropiados en el extremo del cableado. Al conectar potencia, la secuencia apropiada del cableado se muele para moler, +RTN a +RTN, entonces –48 V a –48 V. Al desconectar potencia, la secuencia apropiada del cableado es –48 V a –48 V, +RTN a +RTN, entonces molió para moler. Observe que el alambre de tierra se debe conectar siempre primero y desconectar por último. Observe que el alambre de tierra se debe conectar siempre primero y desconectar por último.

¡Atención! Wire a fonte de alimentação de DC Usando os talões apropriados na extremidade da fiação. Ao conectar a potência, a seqüência apropriada da fiação é moída para moer, +RTN a +RTN, então –48 V a –48 V. Ao desconectar a potência, a seqüência apropriada da fiação é –48 V a –48 V,

Copyright © 2014, Juniper Networks, Inc.

+RTN a +RTN, moeu então para moer. Anote que o fio à terra deve sempre ser conectado primeiramente e desconectado por último. Anote que o fio à terra deve sempre ser conectado primeiramente e desconectado por último.

Varning! Korrekt kopplingssekvens ar jord till jord, +RTN till +RTN, –48 V till – 48 V. Korrekt kopplas kopplingssekvens ar –48 V till –48 V, +RTN till +RTN, jord till jord.

DC Power Wiring Terminations Warning



WARNING: When stranded wiring is required, use approved wiring terminations, such as closed-loop or spade-type with upturned lugs. These terminations should be the appropriate size for the wires and should clamp both the insulation and conductor.

Waarschuwing Wanneer geslagen bedrading vereist is, dient u bedrading te gebruiken die voorzien is van goedgekeurde aansluitingspunten, zoals het gesloten-lus type of het grijperschop type waarbij de aansluitpunten omhoog wijzen. Deze aansluitpunten dienen de juiste maat voor de draden te hebben en dienen zowel de isolatie als de geleider vast te klemmen.

Varoitus Jos säikeellinen johdin on tarpeen, käytä hyväksyttyä johdinliitäntää, esimerkiksi suljettua silmukkaa tai kourumaista liitäntää, jossa on ylöspäin käännetyt kiinnityskorvat. Tällaisten liitäntöjen tulee olla kooltaan johtimiin sopivia ja niiden tulee puristaa yhteen sekä eristeen että johdinosan.

Attention Quand des fils torsadés sont nécessaires, utiliser des douilles terminales homologuées telles que celles à circuit fermé ou du type à plage ouverte avec cosses rebroussées. Ces douilles terminales doivent être de la taille qui convient aux fils et doivent être refermées sur la gaine isolante et sur le conducteur.

Warnung Wenn Litzenverdrahtung erforderlich ist, sind zugelassene Verdrahtungsanschlüsse, z.B. Ringoesen oder gabelförmige Kabelschuhe mit nach oben gerichteten Enden zu verwenden. Diese Abschlüsse sollten die angemessene Größe für die Drähte haben und sowohl die Isolierung als auch den Leiter festklemmen.

Avvertenza Quando occorre usare trecce, usare connettori omologati, come quelli a occhiello o a forcella con linguette rivolte verso l'alto. I connettori devono avere la misura adatta per il cablaggio e devono serrare sia l'isolante che il conduttore.

Advarsel Hvis det er nødvendig med flertrådede ledninger, brukes godkjente ledningsavslutninger, som for eksempel lukket sløyfe eller spadetype med oppoverbøyde kabelsko. Disse avslutningene skal ha riktig størrelse i forhold til ledningene, og skal klemme sammen både isolasjonen og lederen.

Copyright © 2014, Juniper Networks, Inc.

Aviso Quando forem requeridas montagens de instalação eléctrica de cabo torcido, use terminações de cabo aprovadas, tais como, terminações de cabo em circuito fechado e planas com terminais de orelha voltados para cima. Estas terminações de cabo deverão ser do tamanho apropriado para os respectivos cabos, e deverão prender simultaneamente o isolamento e o fio condutor.

¡Atención! Cuando se necesite hilo trenzado, utilizar terminales para cables homologados, tales como las de tipo "bucle cerrado" o "espada", con las lengüetas de conexión vueltas hacia arriba. Estos terminales deberán ser del tamaño apropiado para los cables que se utilicen, y tendrán que sujetar tanto el aislante como el conductor.

Varning! När flertrådiga ledningar krävs måste godkända ledningskontakter användas, t.ex. kabelsko av sluten eller öppen typ med uppåtvänd tapp. Storleken på dessa kontakter måste vara avpassad till ledningarna och måste kunna hålla både isoleringen och ledaren fastklämda.

Related Documentation

- In Case of Electrical Accident on page 259
- General Electrical Safety Guidelines and Warnings on page 260
- SRX5800 Services Gateway Agency Approvals on page 270
- SRX5800 Services Gateway DC Power Supply Specifications on page 286
- SRX5800 Services Gateway Chassis Grounding Point Specifications on page 280

SRX5800 Services Gateway Agency Approvals

The services gateway complies with the following standards:

- Safety
  - CSA 60950-1 (2003) Safety of Information Technology Equipment
  - UL 60950-1 (2003) Safety of Information Technology Equipment
  - EN 60950-1 (2001) Safety of Information Technology Equipment
  - IEC 60950-1 (2001) Safety of Information Technology Equipment (with country deviations)
  - EN 60825-1 +A1+A2 (1994) Safety of Laser Products - Part 1: Equipment Classification
- EMC
  - EN 300 386 V1.3.3 (2005) Telecom Network Equipment - EMC requirements
- EMI
  - FCC Part 15 Class A (2007) USA Radiated Emissions
  - EN 55022 Class A (2006) European Radiated Emissions

Copyright © 2014, Juniper Networks, Inc.

  - VCCI Class A (2007) Japanese Radiated Emissions
- Immunity
  - EN 55024 +A1+A2 (1998) Information Technology Equipment Immunity Characteristics
  - EN-61000-3-2 (2006) Power Line Harmonics
  - EN-61000-3-3 +A1 +A2 +A3 (1995) Power Line Voltage Fluctuations
  - EN-61000-4-2 +A1 +A2 (1995) Electrostatic Discharge
  - EN-61000-4-3 +A1+A2 (2002) Radiated Immunity
  - EN-61000-4-4 (2004) Electrical Fast Transients
  - EN-61000-4-5 (2006) Surge
  - EN-61000-4-6 (2007) Immunity to Conducted Disturbances
  - EN-61000-4-11 (2004) Voltage Dips and Sags

Related Documentation

- In Case of Electrical Accident on page 259
- General Electrical Safety Guidelines and Warnings on page 260
- DC Power Electrical Safety Guidelines and Warnings on page 264

SRX5800 Services Gateway Compliance Statements for EMC Requirements

- Canada on page 271
- European Community on page 271
- Israel on page 272
- Japan on page 272
- United States on page 272

Canada

This Class A digital apparatus complies with Canadian ICES-003.

Cet appareil numérique de la classe A est conforme à la norme NMB-003 du Canada.

European Community

This is a Class A product. In a domestic environment this product may cause radio interference in which case the user may be required to take adequate measures.

Copyright © 2014, Juniper Networks, Inc.

Israel

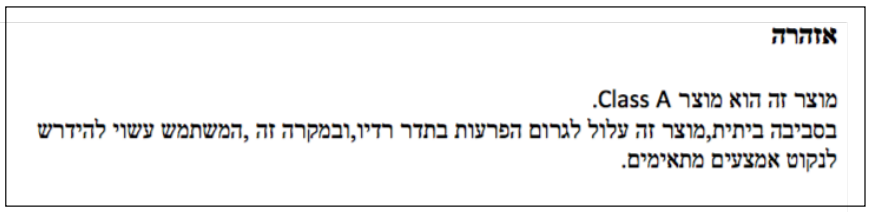

The preceding translates as follows:

This product is Class A. In residential environments, the product may cause radio interference, and in such a situation, the user may be required to take adequate measures.

Japan

この装置は、情報処理装置等電波障害自主規制協議会（ＶＣＣＩ）の基準に基づくクラスＡ情報技術装置です。この装置は、家庭環境で使用することを目的としていますが、この装置がラジオやテレビジョン受信機に近接して使用されると、受信障害を引き起こすことがあります。
取扱説明書に従って正しい取り扱いをして下さい。

The preceding translates as follows:

This is a Class A product based on the standard of the Voluntary Control Council for Interference by Information Technology Equipment (VCCI). If this product is used near a radio or television receiver in a domestic environment, it may cause radio interference. Install and use the equipment according to the instruction manual.

United States

The services gateway has been tested and found to comply with the limits for a Class A digital device of the FCC Rules. These limits are designed to provide reasonable protection against harmful interference when the equipment is operated in a commercial environment. This equipment generates, uses, and can radiate radio frequency energy and, if not installed and used in accordance with the instruction manual, may cause harmful interference to radio communications. Operation of this equipment in a residential area is likely to cause harmful interference in which case the user will be required to correct the interference at his own expense.

Related Documentation

- SRX5800 Services Gateway Agency Approvals on page 270

Copyright © 2014, Juniper Networks, Inc.

APPENDIX B

SRX5800 Services Gateway Environmental Specifications

- SRX5800 Services Gateway Environmental Specifications on page 273

SRX5800 Services Gateway Environmental Specifications

Table 28 on page 273 specifies the environmental specifications required for normal services gateway operation. In addition, the site should be as dust-free as possible.

Table 28: Services Gateway Environmental Specifications

Description	Value
Altitude	No performance degradation to 10,000 ft (3048 m)
Relative humidity	Normal operation ensured in relative humidity range of 5% to 90%, noncondensing
Temperature	Normal operation ensured in temperature range of 32°F (0°C) to 104°F (40°C) Nonoperating storage temperature in shipping crate: –40°F (–40°C) to 158°F (70°C)
Seismic	Tested to meet Telcordia Technologies Zone 4 earthquake requirements
Maximum thermal output	AC power: 20,160, BTU/hour (5912 W) DC power: 17,057 BTU/hour (5002 W) NOTE: These specifications are estimates and subject to change.

NOTE: Install the services gateway only in restricted areas, such as dedicated equipment rooms and equipment closets, in accordance with Articles 110-16, 110-17, and 110-18 of the National Electrical Code, ANSI/NFPA 70.

Copyright © 2014, Juniper Networks, Inc.

Related Documentation

- SRX5800 Services Gateway Agency Approvals on page 270
- SRX5800 Services Gateway General Safety Guidelines and Warnings on page 237
- SRX5800 Services Gateway Fire Safety Requirements and Fire Suppression Equipment on page 243
- SRX5800 Services Gateway Definition of Safety Warning Levels on page 235
- General Electrical Safety Guidelines and Warnings on page 260

Copyright © 2014, Juniper Networks, Inc.

APPENDIX C

SRX5800 Services Gateway Power Guidelines, Requirements, and Specifications

- Calculating Power Requirements for the SRX5800 Services Gateway on page 275
- SRX5800 Services Gateway Chassis Grounding Specifications on page 280
- SRX5800 Services Gateway AC Power Specifications and Requirements on page 282
- SRX5800 Services Gateway DC Power Specifications and Requirements on page 286
- SRX5800 Services Gateway Electrical Wiring Guidelines on page 290

Calculating Power Requirements for the SRX5800 Services Gateway

The information in this topic helps you determine which power supplies are suitable for various configurations, as well as which power supplies are not suitable because output power is exceeded. You determine suitability by subtracting the total power draw from the maximum output of the power supplies. Afterward, the required input current is calculated. Finally, you calculate the thermal output.

We recommend that you provision power according to the maximum input current listed in the power supply electrical specifications (see "SRX5800 Services Gateway AC Power Supply Specifications" on page 282 and "SRX5800 Services Gateway DC Power Supply Specifications" on page 286).

Use the following procedures to calculate the power requirement:

1. Calculate the power requirement.
2. Evaluate the power budget.
3. Calculate input power.
4. Calculate thermal output (BTUs) for cooling requirements.

Copyright © 2014, Juniper Networks, Inc.

The SRX5800 Services Gateway chassis with normal-capacity AC power supplies has one overall zone. The SRX5800 Services Gateway Chassis with high-capacity AC power supplies or either standard- or high-capacity DC power supplies is zoned. Zoning means that certain components are powered by specific power supplies (see Table 29 on page 276 and Figure 105 on page 276 for information on zoning). When calculating power requirements, be sure that there is adequate power for each zone.

Three AC power supplies are mandatory for a SRX5800 Services Gateway chassis with normal-capacity AC power supplies.

Table 29: SRX5800 Services Gateway Zoning

Zone	Power Supply (PEM)	Components Receiving Power
Zone 0	PEM 0 or 2	• Lower fan tray • IOC/SPC slots 6 through 11 • SCB slots 1 through 2
Zone 1	PEM 1 or 3	• Upper fan tray • IOC/SPC slots 0 through 5 • SCB slot 0

Figure 105: Power Distribution from DC and High-Capacity AC Power Supplies in the SRX5800 Services Gateway Chassis

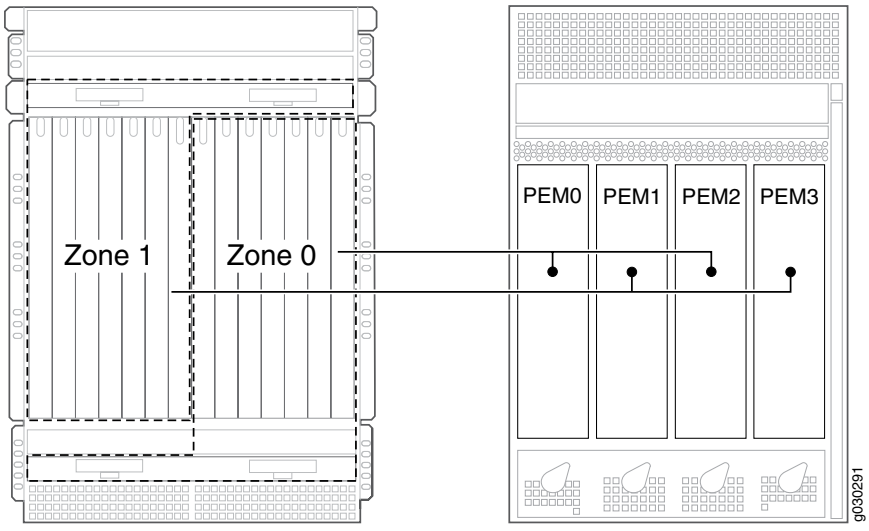

The following sample configuration shows an SRX5800 Services Gateway chassis with:

- Four high-capacity AC power supplies (using two feeds for each power supply); two supplies are active, two are redundant.
- Two SRX5K-SCB Switch Control Boards (SCBs) with one SRX5K-RE-13-20 Routing Engine installed in each (SCB slot 0 and SCB slot 1).
- One SRX5K-MPC Modular Port Concentrator (MPC), with two Modular Interface Cards (MICs) (slot 2/6).

Copyright © 2014, Juniper Networks, Inc.

- One SRX5K-SPC-2-10-40 Services Processing Card (SPC) (slot 11)
- One SRX5K-40GE-SFP I/O card (IOC) (slot 7).
- Nine SRX5K-SPC-4-15-320 Services Processing Cards (SPCs) (slots 0 through 5 and 8 through 10).



NOTE: You must have high-capacity power supplies (either AC or DC) and high-capacity fan trays installed in the services gateway in order to install and use SRX5K-SPC-4-15-320 SPCs. If you do not have high-capacity power supplies and fan trays installed, the services gateway will log an alarm condition when it recognizes the SRX5K-SPC-4-15-320 SPCs.

- High-capacity cooling system (upper and lower fan trays).



NOTE: The high-capacity cooling system satisfies cooling requirements of SRX5K-SPC-4-15-320 SPCs and must be used for proper cooling.

Copyright © 2014, Juniper Networks, Inc.

For the power consumption specifications of specific SRX5800 services gateway cards, see the *SRX5400, SRX5600, and SRX5800 Services Gateway Card Guide* at www.juniper.net/techpubs/.

1. Calculate the power requirements (usage) as shown in Table 30 on page 278.

Table 30: Sample Power Requirements for an SRX5800 Services Gateway

Chassis Component	Part Number	Power Requirement	Zone 0 Power	Zone 1 Power
Base system	SRX5800BASE-HC-AC	50 W	25 W	25 W
High-capacity cooling system	SRX5800-HC-FAN	320 W * 2 = 640 W	320 W	320 W
SPC - slots 0 through 5	SRX5K-SPC-4-15-320 See note below.	585 W * 6 = 3510 W		3510 W
MPC - slot 2/6	SRX5K-MPC with two MICs	570 W	570 W	
IOC slot 7	SRX5K-40GE-SFP	365 W	365 W	
SPC - slots 8 through 10	SRX5K-SPC-4-15-320 See note below.	585 W * 3 = 1755 W	1755 W	
SPC - slot 11	SRX5K-SPC-2-10-40	351 W	351 W	
SCB 0	SRX5K-SCB with SRX5K-RE-13-20	150 W 90 W		240 W
SCB 1	SRX5K-SCB with SRX5K-RE-13-20	150 W 90 W	240 W	
Total power requirement		SRX5800 standard-capacity AC (not zoned) 7721 W	Zone 0 total: 3626 W	Zone 1 total: 4095 W

2. Evaluate the power budget, including the budget for each zone, if applicable. In this step, we check the required power against the maximum output power of available power supply options.

   Table 31 on page 279 lists the power supplies, their maximum output power, and unused power (or a power deficit).

Copyright © 2014, Juniper Networks, Inc.

Table 31: Calculating Power Budget

Power Supply	Maximum Output Power of Power Supply	Maximum Output Power for System	Nonzoned Unused Power	Zone 0 Unused Power[1]	Zone 1 Unused Power[2]
SRX5800 AC standard-capacity	1700 W	5100 W	Power exceeded (non-zoned; 5100 W - 7721 = power exceeded)	–	–
SRX5800 AC high-capacity	1700 W (one feed) 4100 W (two feeds)	3400 W (one feed) 8200 W (two feeds)	–	Power exceeded 4100-3626=474 W	Power exceeded 4100-4095=5 W
SRX5800 DC normal-capacity	2800 W	5600 W	–	Power exceeded	Power exceeded
SRX5800 DC high-capacity	1700 W (one feed) 4100 W (two feeds)	3400 W (one feed) 8200 W (two feeds)	–	Power exceeded 4100-3626=474 W	Power exceeded 4100-4095=5 W

[1] For this configuration, output power is 3626 W.

[2] For this configuration, output power is 4095 W.

3. Calculate input power. In this step, the input power requirements for the example configuration are calculated. To do this, divide the total output requirement by the efficiency of the power supply as shown in Table 32 on page 279.



NOTE: Normal-capacity AC and DC power supplies are not included in the following table, because their power budget was exceeded in the sample configuration.

Table 32: Calculating Input Power

Power Supply	Power Supply Efficiency[1]	Input Power Requirement
SRX5800 AC high-capacity	~88 %	Zone 0: 3626/0.88= 4120 W
		Zone 1: 4095/0.88= 4653 W
SRX5800 DC high-capacity	86 %	Zone 0: 3626/0.86= 4216 W
		Zone 1: 4095/0.86= 4762W

Copyright © 2014, Juniper Networks, Inc.

[1] These values are at full load and nominal voltage.

4. Calculate thermal output (BTUs) for the system. To calculate this value, add the total input power requirement (in watts) for the two zones together and multiply the sum by 3.41 as shown in Table 33 on page 280.

Table 33: Calculating Thermal Output

Power Supply	Thermal Output (BTUs per hour)
SRX5800 AC high-capacity	(4120 + 4653) * 3.41 = 29,916 BTU/hr
SRX5800 DC high-capacity	(4216 + 4762) * 3.41 = 30,615 BTU/hr

Related Documentation

- SRX5800 Services Gateway AC Power Supply Specifications on page 282
- SRX5800 Services Gateway DC Power Supply Specifications on page 286

SRX5800 Services Gateway Chassis Grounding Specifications

- SRX5800 Services Gateway Chassis Grounding Point Specifications on page 280
- SRX5800 Services Gateway Grounding-Cable Lug Specification on page 281
- SRX5800 Services Gateway Grounding Cable Specifications on page 282

SRX5800 Services Gateway Chassis Grounding Point Specifications



WARNING: To meet safety and electromagnetic interference (EMI) requirements and to ensure proper operation, you must properly ground the services gateway chassis before connecting power. See "Grounding the SRX5800 Services Gateway" on page 96 for instructions.



CAUTION: Before services gateway installation begins, a licensed electrician must attach cable lugs to the grounding and power cables that you supply. A cable with an incorrectly attached lug can damage the services gateway.

The services gateway chassis has two grounding points along the lower edge of the back panel. Each grounding point consists of two threaded holes spaced 0.625-in. (15.86-mm) apart (see Figure 106 on page 281). The left grounding point fits M6 screws (European), and the right grounding point fits UNC 1/4–20 screws (American). The accessory box shipped with the services gateway includes the cable lug that attaches to the grounding cable and two UNC 1/4–20 screws used to secure the grounding cable to the right-side grounding point on the services gateway.

Copyright © 2014, Juniper Networks, Inc.

Figure 106: SRX5800 Services Gateway Chassis Grounding Points

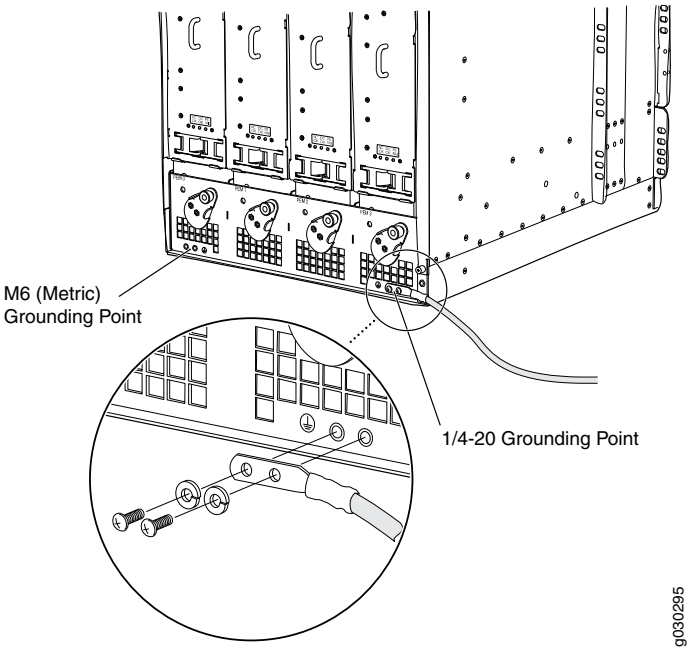

To ground the services gateway, you must connect a grounding cable to earth ground and then attach it to the chassis grounding point using the two screws provided.

NOTE: Additional grounding is provided to an AC-powered services gateway when you plug its power supplies into grounded AC power receptacles.

Related Documentation

- Grounding the SRX5800 Services Gateway on page 96
- SRX5800 Services Gateway Grounding-Cable Lug Specification on page 281
- SRX5800 Services Gateway Grounding Cable Specifications on page 282

SRX5800 Services Gateway Grounding-Cable Lug Specification

The accessory box shipped with the services gateway includes the cable lug that attaches to the grounding cable (see Figure 107 on page 281) and two UNC 1/4–20 screws used to secure the grounding cable to the grounding points.

Figure 107: Grounding Cable Lug

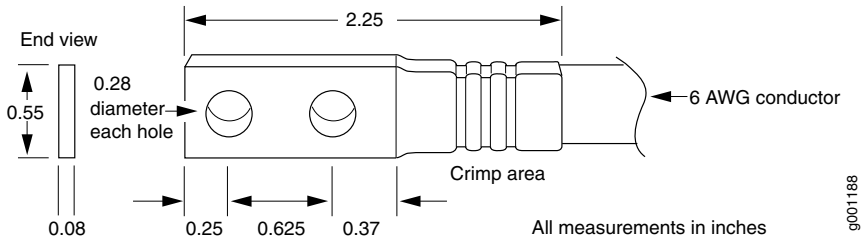

CAUTION: Before services gateway installation begins, a licensed electrician must attach a cable lug to the grounding and power cables that you supply. A cable with an incorrectly attached lug can damage the services gateway.

NOTE: The same cable lug is used for the DC power cables.

Related Documentation

- Grounding the SRX5800 Services Gateway on page 96
- SRX5800 Services Gateway Chassis Grounding Point Specifications on page 280
- SRX5800 Services Gateway Grounding Cable Specifications on page 282

SRX5800 Services Gateway Grounding Cable Specifications

The grounding cable that you provide must meet the specifications in Table 34 on page 282.

Table 34: Grounding Cable Specifications

Cable Type	Quantity and Specification
Grounding	One 6-AWG (13.3 mm^2), minimum 60°C wire, or as required by the local code

WARNING: To meet safety and electromagnetic interference (EMI) requirements and to ensure proper operation, you must properly ground the services gateway chassis before connecting power. See "Grounding the SRX5800 Services Gateway" on page 96 for instructions.

Related Documentation

- Grounding the SRX5800 Services Gateway on page 96
- SRX5800 Services Gateway Chassis Grounding Point Specifications on page 280
- SRX5800 Services Gateway Grounding-Cable Lug Specification on page 281

SRX5800 Services Gateway AC Power Specifications and Requirements

- SRX5800 Services Gateway AC Power Supply Specifications on page 282
- AC Power Circuit Breaker Requirements for the SRX5800 Services Gateway on page 283
- AC Power Cord Specifications for the SRX5800 Services Gateway on page 284

SRX5800 Services Gateway AC Power Supply Specifications

Table 35 on page 283 lists the AC power supply electrical specifications for both the standard-capacity and high-capacity AC power supply. Table 36 on page 283 lists the AC power system electrical specifications.

Copyright © 2014, Juniper Networks, Inc.

Table 35: AC Power Supply Electrical Specifications

Item	Specification	
	Standard-Capacity	High-Capacity
Maximum output power	1700 W	4100 W (two AC inputs) 1700 W (one AC input)
AC input current rating	11 A @ 240 VAC maximum	13 A @ 240 VAC maximum per AC input (26 A per power supply when two AC inputs are used)
AC input voltage	Operating range: 200 to 240 VAC	
AC input line frequency	50 to 60 Hz	
Efficiency	~88% NOTE: This value is at full load and nominal voltage.	

Table 36: AC Power System Specifications

Item	Normal-Capacity	High-Capacity	
		Two AC inputs for each power supply	One AC input for each power supply
Redundancy	3+1	2+2	2+2
Output power (maximum) per supply	1700 W	4100 W	1700 W
Output power (maximum) per system	5100 W	8200 W	3400 W

Related Documentation

- Calculating Power Requirements for the SRX5800 Services Gateway on page 275
- AC Power Circuit Breaker Requirements for the SRX5800 Services Gateway on page 283
- AC Power Cord Specifications for the SRX5800 Services Gateway on page 284

AC Power Circuit Breaker Requirements for the SRX5800 Services Gateway

Each AC power supply has a single AC appliance inlet located in the chassis directly above the power supply that requires a dedicated AC power feed. We recommend that you use a dedicated customer site circuit breaker rated for 15 A (250 VAC) minimum for each AC power supply, or as required by local code.

Related Documentation

- SRX5800 Services Gateway AC Power Supply Specifications on page 282
- Calculating Power Requirements for the SRX5800 Services Gateway on page 275

Copyright © 2014, Juniper Networks, Inc.

- AC Power Cord Specifications for the SRX5800 Services Gateway on page 284

AC Power Cord Specifications for the SRX5800 Services Gateway

Each AC power supply has a single AC appliance inlet located in the chassis directly above the power supply that requires a dedicated AC power feed. Most sites distribute power through a main conduit that leads to frame-mounted power distribution panels, one of which can be located at the top of the rack that houses the services gateway. An AC power cord connects each power supply to the power distribution panel.

The services gateway is not shipped with AC power cords. You must order power cords separately using the model number shown in Table 37 on page 284. The C19 appliance coupler at the female end of the cord inserts into the AC appliance inlet coupler, type C20 (right angle) as described by International Electrotechnical Commission (IEC) standard 60320. The plug at the male end of the power cord fits into the power source receptacle that is standard for your geographical location.

Table 37 on page 284 provides specifications and Figure 108 on page 285 depicts the plug on the AC power cord provided for each country or region.

Table 37: AC Power Cord Specifications

Country	Model Number	Electrical Specification	Plug Type
Australia	CBL-M-PWR-RA-AU	240 VAC, 50 Hz AC	SAA/3
China	CBL-M-PWR-RA-CH	220 VAC, 50 Hz AC	PSB-10
Europe (except Denmark, Italy, Switzerland, and United Kingdom)	CBL-M-PWR-RA-EU	220 or 230 VAC, 50 Hz AC	CEE 7/7
Italy	CBL-M-PWR-RA-IT	230 VAC, 50 Hz AC	CEI 23-16/VII
Japan	CBL-M-PWR-RA-JP	220 VAC, 50 or 60 Hz AC	NEMA L6-20P
North America	CBL-M-PWR-RA-TWLK-US	250 VAC, 60 Hz AC	NEMA L6-20P
United Kingdom	CBL-M-PWR-RA-UK	240 VAC, 50 Hz AC	BS89/13

Copyright © 2014, Juniper Networks, Inc.

Figure 108: AC Plug Types

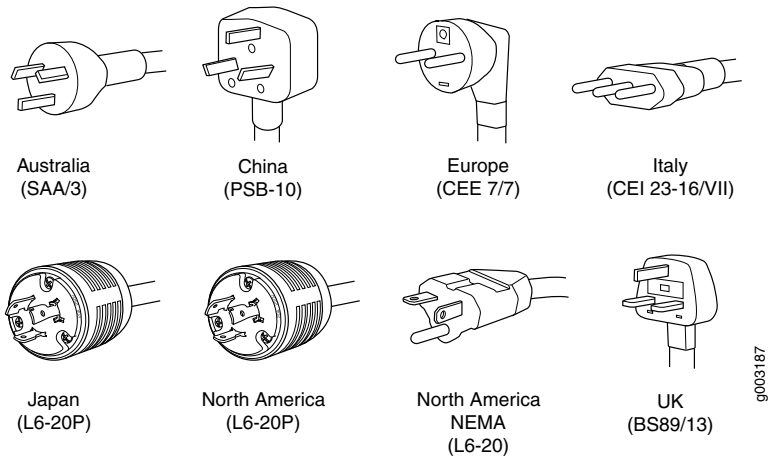

WARNING: The AC power cord for the services gateway is intended for use with the services gateway only and not for any other use.

WARNING: To meet safety and electromagnetic interference (EMI) requirements and to ensure proper operation, you must properly ground the services gateway chassis before connecting power. See "Grounding the SRX5800 Services Gateway" on page 96 for instructions.

CAUTION: Power cords and cables must not block access to services gateway components or drape where people could trip on them.

NOTE: In North America, AC power cords must not exceed 4.5 m (approximately 14.75 ft) in length, to comply with National Electrical Code (NEC) Sections 400-8 (NFPA 75, 5-2.2) and 210-52, and Canadian Electrical Code (CEC) Section 4-010(3). The cords listed in Table 37 on page 284 are in compliance.

Related Documentation

- SRX5800 Services Gateway AC Power Supply Specifications on page 282
- Calculating Power Requirements for the SRX5800 Services Gateway on page 275
- AC Power Circuit Breaker Requirements for the SRX5800 Services Gateway on page 283

Copyright © 2014, Juniper Networks, Inc.

SRX5800 Services Gateway DC Power Specifications and Requirements

- SRX5800 Services Gateway DC Power Supply Specifications on page 286
- DC Power Circuit Breaker Requirements for the SRX5800 Services Gateway on page 287
- DC Power Source Cabling for the SRX5800 Services Gateway on page 287
- DC Power Cable Specifications for the SRX5800 Services Gateway on page 289
- DC Power Cable Lug Specifications for the SRX5800 Services Gateway on page 289

SRX5800 Services Gateway DC Power Supply Specifications

Table 38 on page 286 lists the DC power supply electrical specifications.

Table 38: DC Power Supply Electrical Specifications

Item	Standard-Capacity	High-Capacity	
		Two-Feed Mode	One-Feed Mode
Maximum output power	2800 W	4100 W	1700 W
DC input voltage	Nominal: –48 VDC Operating range: –40 to –72 VDC	Nominal: –48 VDC Operating range: –40 to –72 VDC	Nominal: –48 VDC Operating range: –40 to –72 VDC
Maximum input current rating @ 40 VDC	70 A	128 A for both feeds (66 A and 62 A per feed)	52 A
DC nominal input current rating @48 VDC	58 A maximum@–48 VDC (nominal)	104 A for both feeds (54 A and 50 A per feed)	42 A
Efficiency	99%	86%	
	NOTE: This value is at full load and nominal voltage.		
Internal Circuit Breaker	80 A	–	–

Table 39: Power System Electrical Specifications

Item	Normal-Capacity	High-Capacity	
Redundancy	2+2	2+2	
Output power (maximum) per supply	2800 W	Two-feed mode	One-feed mode
		4100 W	1700 W
Output power (maximum) per system	5600 W	8200 W	3400 W

Copyright © 2014, Juniper Networks, Inc.

Related Documentation

- Calculating Power Requirements for the SRX5800 Services Gateway on page 275
- DC Power Circuit Breaker Requirements for the SRX5800 Services Gateway on page 287
- DC Power Source Cabling for the SRX5800 Services Gateway on page 287
- DC Power Cable Specifications for the SRX5800 Services Gateway on page 289
- DC Power Cable Lug Specifications for the SRX5800 Services Gateway on page 289

DC Power Circuit Breaker Requirements for the SRX5800 Services Gateway

If you plan to operate a maximally configured DC-powered services gateway with standard-capacity power supplies, we recommend that you provision at least 116 A (58 A per feed) @ –48 VDC (nominal) for the system. Use a customer site circuit breaker rated according to respective National Electrical Code and customer site internal standards to maintain proper level of protection for the current specified above.

If you plan to operate a maximally configured DC-powered services gateway with high-capacity power supplies, we recommend that you provision at least 208 A (104 A per supply) @ –48 VDC (nominal) for the system. This is maximum current draw at –48 VDC when two power supplies are providing the power to the system and the redundant power supplies are not supplying power or not present. Use a customer site circuit breaker rated according to respective National Electrical Code and customer site internal standards to maintain proper level of protection for the current specified above.

If you plan to operate a DC-powered services gateway at less than the maximum configuration, we recommend that you provision a circuit breaker according to respective National Electrical Code and customer site internal standards to maintain proper level of protection for the current specified above or each DC power supply rated for at least 125% of the continuous current that the system draws at –48 VDC.

Related Documentation

- SRX5800 Services Gateway DC Power Supply Specifications on page 286
- Calculating Power Requirements for the SRX5800 Services Gateway on page 275
- DC Power Source Cabling for the SRX5800 Services Gateway on page 287
- DC Power Cable Specifications for the SRX5800 Services Gateway on page 289
- DC Power Cable Lug Specifications for the SRX5800 Services Gateway on page 289

DC Power Source Cabling for the SRX5800 Services Gateway

Figure 109 on page 288 shows a typical DC source cabling arrangement.

Copyright © 2014, Juniper Networks, Inc.

Figure 109: Typical DC Source Cabling to the Services Gateway

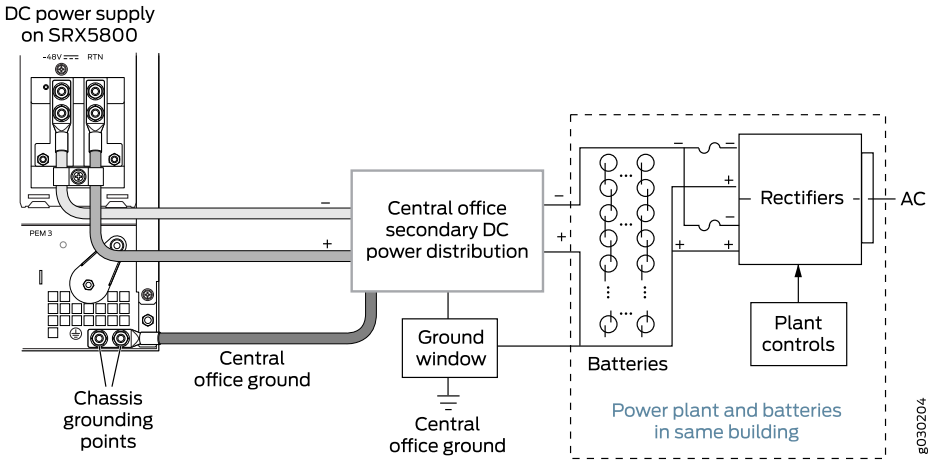

The DC power supplies in slots **PEM0** and **PEM1** must be powered by dedicated power feeds derived from feed A, and the DC power supplies in slots **PEM2** and **PEM3** must be powered by dedicated power feeds derived from feed B. This configuration provides the commonly deployed A/B feed redundancy for the system.

CAUTION: You must ensure that power connections maintain the proper polarity. The power source cables might be labeled (+) and (–) to indicate their polarity. There is no standard color coding for DC power cables. The color coding used by the external DC power source at your site determines the color coding for the leads on the power cables that attach to the terminal studs on each power supply.

WARNING: For field-wiring connections, use copper conductors only.

CAUTION: Power cords and cables must not block access to device components or drape where people could trip on them.

Related Documentation

- SRX5800 Services Gateway DC Power Supply Specifications on page 286
- Calculating Power Requirements for the SRX5800 Services Gateway on page 275
- DC Power Circuit Breaker Requirements for the SRX5800 Services Gateway on page 287
- DC Power Cable Specifications for the SRX5800 Services Gateway on page 289
- DC Power Cable Lug Specifications for the SRX5800 Services Gateway on page 289

Copyright © 2014, Juniper Networks, Inc.

DC Power Cable Specifications for the SRX5800 Services Gateway

Table 40 on page 289 summarizes the specifications for the power cables, which you must supply.

Table 40: DC Power Cable Specifications

Cable Type	Quantity and Specification
Power	Eight 6-AWG (13.3 mm^2), minimum 60°C wire, or as required by the local code

CAUTION: You must ensure that power connections maintain the proper polarity. The power source cables might be labeled (+) and (–) to indicate their polarity. There is no standard color coding for DC power cables. The color coding used by the external DC power source at your site determines the color coding for the leads on the power cables that attach to the terminal studs on each power supply.

Related Documentation

- SRX5800 Services Gateway DC Power Supply Specifications on page 286
- Calculating Power Requirements for the SRX5800 Services Gateway on page 275
- DC Power Circuit Breaker Requirements for the SRX5800 Services Gateway on page 287
- DC Power Source Cabling for the SRX5800 Services Gateway on page 287
- DC Power Cable Lug Specifications for the SRX5800 Services Gateway on page 289

DC Power Cable Lug Specifications for the SRX5800 Services Gateway

The accessory box shipped with the services gateway includes the cable lugs that attach to the terminal studs of each power supply (see Figure 110 on page 289).

Figure 110: DC Power Cable Lug

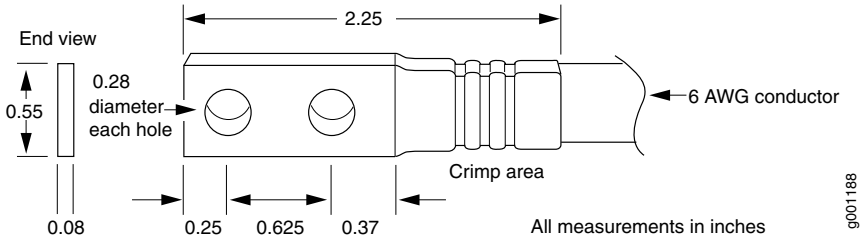

CAUTION: Before services gateway installation begins, a licensed electrician must attach a cable lug to the grounding and power cables that you supply. A cable with an incorrectly attached lug can damage the services gateway.

Copyright © 2014, Juniper Networks, Inc.



WARNING: The services gateway is a pluggable type A equipment installed in restricted access location. It has a separate protective earthing terminal [Metric -M6 and English - ¼-20 screw) ground lugs] provided on the chassis. This separate protective earth terminal must be permanently connected to earth.

Related Documentation

- SRX5800 Services Gateway DC Power Supply Specifications on page 286
- Calculating Power Requirements for the SRX5800 Services Gateway on page 275
- DC Power Circuit Breaker Requirements for the SRX5800 Services Gateway on page 287
- DC Power Source Cabling for the SRX5800 Services Gateway on page 287
- DC Power Cable Specifications for the SRX5800 Services Gateway on page 289

SRX5800 Services Gateway Electrical Wiring Guidelines

- Distance limitations for signaling—Improperly installed wires can emit radio interference. In addition, the potential for damage from lightning strikes increases if wires exceed recommended distances or if wires pass between buildings. The electromagnetic pulse (EMP) caused by lightning can damage unshielded conductors and destroy electronic devices. If your site has previously experienced such problems, you might want to consult experts in electrical surge suppression and shielding.
- Radio frequency interference—You can reduce or eliminate the emission of radio frequency interference (RFI) from your site wiring by using twisted-pair cable with a good distribution of grounding conductors. If you must exceed the recommended distances, use a high-quality twisted-pair cable with one ground conductor for each data signal when applicable.
- Electromagnetic compatibility—If your site is susceptible to problems with electromagnetic compatibility (EMC), particularly from lightning or radio transmitters, you might want to seek expert advice. Strong sources of electromagnetic interference (EMI) can destroy the signal drivers and receivers in the routing platform and conduct power surges over the lines into the equipment, resulting in an electrical hazard. It is particularly important to provide a properly grounded and shielded environment and to use electrical surge-suppression devices.



WARNING: Certain ports on the services gateway are designed for use as intrabuilding (within-the-building) interfaces only (Type 2 or Type 4 ports as described in GR-1089-CORE, Issue 4) and require isolation from the exposed outside plant (OSP) cabling. To comply with NEBS requirements and protect against lightening surges and commercial power disturbances, the intrabuilding ports must not be metallically connected to interfaces that connect to the OSP or its wiring. The intrabuilding ports on the services gateway are suitable for connection to intrabuilding or unexposed wiring

Copyright © 2014, Juniper Networks, Inc.

or cabling only. The addition of primary protectors is not sufficient protection for connecting these interfaces metallically to OSP wiring.

Related Documentation

- General Electrical Safety Guidelines and Warnings on page 260
- Installation Instructions Warning on page 245

Copyright © 2014, Juniper Networks, Inc.

Copyright © 2014, Juniper Networks, Inc.

APPENDIX D

Cable and Wire Guidelines and Specifications for the SRX5800 Services Gateway

- Network Cable Specifications and Guidelines for the SRX5800 Services Gateway on page 293

Network Cable Specifications and Guidelines for the SRX5800 Services Gateway

- Signal Loss in Multimode and Single-Mode Fiber-Optic Cable for the SRX5800 Services Gateway on page 293
- Attenuation and Dispersion in Fiber-Optic Cable for the SRX5800 Services Gateway on page 294
- Calculating Power Budget for Fiber-Optic Cable for the SRX5800 Services Gateway on page 295
- Calculating Power Margin for Fiber-Optic Cable for the SRX5800 Services Gateway on page 295
- Routing Engine Interface Cable and Wire Specifications for the SRX5800 Services Gateway on page 297
- Alarm Relay Contact Wire Specifications for the SRX5800 Services Gateway on page 298
- Console Port Cable and Wire Specifications for the SRX5800 Services Gateway on page 298

Signal Loss in Multimode and Single-Mode Fiber-Optic Cable for the SRX5800 Services Gateway

Multimode fiber is large enough in diameter to allow rays of light to reflect internally (bounce off the walls of the fiber). Interfaces with multimode optics typically use LEDs as light sources. LEDs are not coherent sources, however. They spray varying wavelengths of light into the multimode fiber, which reflects the light at different angles. Light rays travel in jagged lines through a multimode fiber, causing signal dispersion. When light traveling in the fiber core radiates into the fiber cladding, higher-order mode loss (HOL) results. Together these factors limit the transmission distance of multimode fiber compared to single-mode fiber.

Single-mode fiber is so small in diameter that rays of light can reflect internally through one layer only. Interfaces with single-mode optics use lasers as light sources. Lasers

Copyright © 2014, Juniper Networks, Inc.

generate a single wavelength of light, which travels in a straight line through the single-mode fiber. Compared with multimode fiber, single-mode fiber has higher bandwidth and can carry signals for longer distances. It is consequently more expensive.

Related Documentation

- Attenuation and Dispersion in Fiber-Optic Cable for the SRX5800 Services Gateway on page 294
- Calculating Power Budget for Fiber-Optic Cable for the SRX5800 Services Gateway on page 295
- Calculating Power Margin for Fiber-Optic Cable for the SRX5800 Services Gateway on page 295
- Connecting Network Cables to SRX5800 Services Gateway IOCs and Port Modules on page 91

Attenuation and Dispersion in Fiber-Optic Cable for the SRX5800 Services Gateway

Correct functioning of an optical data link depends on modulated light reaching the receiver with enough power to be demodulated correctly. *Attenuation* is the reduction in power of the light signal as it is transmitted. Attenuation is caused by passive media components, such as cables, cable splices, and connectors. While attenuation is significantly lower for optical fiber than for other media, it still occurs in both multimode and single-mode transmission. An efficient optical data link must have enough light available to overcome attenuation.

Dispersion is the spreading of the signal in time. The following two types of dispersion can affect an optical data link:

- Chromatic dispersion—The spreading of the signal in time resulting from the different speeds of light rays.
- Modal dispersion—The spreading of the signal in time resulting from the different propagation modes in the fiber.

For multimode transmission, modal dispersion, rather than chromatic dispersion or attenuation, usually limits the maximum bit rate and link length. For single-mode transmission, modal dispersion is not a factor. However, at higher bit rates and over longer distances, chromatic dispersion rather than modal dispersion limits maximum link length.

An efficient optical data link must have enough light to exceed the minimum power that the receiver requires to operate within its specifications. In addition, the total dispersion must be less than the limits specified for the type of link in Telcordia Technologies document GR-253-CORE (Section 4.3) and International Telecommunications Union (ITU) document G.957.

When chromatic dispersion is at the maximum allowed, its effect can be considered as a power penalty in the power budget. The optical power budget must allow for the sum of component attenuation, power penalties (including those from dispersion), and a safety margin for unexpected losses.

Copyright © 2014, Juniper Networks, Inc.

Related Documentation

- Signal Loss in Multimode and Single-Mode Fiber-Optic Cable for the SRX5800 Services Gateway on page 293
- Calculating Power Budget for Fiber-Optic Cable for the SRX5800 Services Gateway on page 295
- Calculating Power Margin for Fiber-Optic Cable for the SRX5800 Services Gateway on page 295
- Connecting Network Cables to SRX5800 Services Gateway IOCs and Port Modules on page 91

Calculating Power Budget for Fiber-Optic Cable for the SRX5800 Services Gateway

To ensure that fiber-optic connections have sufficient power for correct operation, you need to calculate the link's power budget, which is the maximum amount of power it can transmit. When you calculate the power budget, you use a worst-case analysis to provide a margin of error, even though all the parts of an actual system do not operate at the worst-case levels. To calculate the worst-case estimate of power budget (P_B), you assume minimum transmitter power (P_T) and minimum receiver sensitivity (P_R):

$$P_B = P_T - P_R$$

The following hypothetical power budget equation uses values measured in decibels (dB) and decibels referred to one milliwatt (dBm):

$$P_B = P_T - P_R$$

$$P_B = -15 \text{ dBm} - (-28 \text{ dBm})$$

$$P_B = 13 \text{ dB}$$

Related Documentation

- Signal Loss in Multimode and Single-Mode Fiber-Optic Cable for the SRX5800 Services Gateway on page 293
- Attenuation and Dispersion in Fiber-Optic Cable for the SRX5800 Services Gateway on page 294
- Calculating Power Margin for Fiber-Optic Cable for the SRX5800 Services Gateway on page 295
- Connecting Network Cables to SRX5800 Services Gateway IOCs and Port Modules on page 91

Calculating Power Margin for Fiber-Optic Cable for the SRX5800 Services Gateway

After calculating a link's power budget, you can calculate the power margin (P_M), which represents the amount of power available after subtracting attenuation or link loss (LL) from the power budget (P_B). A worst-case estimate of P_M assumes maximum LL:

$$P_M = P_B - LL$$

A P_M greater than zero indicates that the power budget is sufficient to operate the receiver.

Copyright © 2014, Juniper Networks, Inc.

Factors that can cause link loss include higher-order mode losses, modal and chromatic dispersion, connectors, splices, and fiber attenuation. Table 41 on page 296 lists an estimated amount of loss for the factors used in the following sample calculations. For information about the actual amount of signal loss caused by equipment and other factors, see your vendor documentation.

Table 41: Estimated Values for Factors That Cause Link Loss

Link-Loss Factor	Estimated Link-Loss Value
Higher-order mode losses	Single-mode—None Multimode—0.5 dB
Modal and chromatic dispersion	Single-mode—None Multimode—None, if product of bandwidth and distance is less than 500 MHz–km
Connector	0.5 dB
Splice	0.5 dB
Fiber attenuation	Single-mode—0.5 dB/km Multimode—1 dB/km

The following example uses the estimated values in Table 41 on page 296 to calculate link loss (*LL*) for a 2 km-long multimode link with a power budget (P_B) of 13 dB:

- Fiber attenuation for 2 km @ 1.0 dB/km= 2 dB
- Loss for five connectors @ 0.5 dB per connector = 5(0.5 dB) = 2.5 dB
- Loss for two splices @ 0.5 dB per splice =2(0.5 dB) = 1 dB
- Higher-order loss = 0.5 dB
- Clock recovery module = 1 dB

The power margin (P_M) is calculated as follows:

$P_M = P_B - LL$

P_M = 13 dB – 2 km (1.0 dB/km) – 5 (0.5 dB) – 2 (0.5 dB) – 0.5 dB [HOL] – 1 dB [CRM]

P_M = 13 dB – 2 dB – 2.5 dB – 1 dB – 0.5 dB – 1 dB

P_M = 6 dB

The following sample calculation for an 8 km-long single-mode link with a power budget (P_B) of 13 dB uses the estimated values from Table 41 on page 296 to calculate link loss (*LL*) as the sum of fiber attenuation (8 km @ 0.5 dB/km, or 4 dB) and loss for seven connectors (0.5 dB per connector, or 3.5 dB). The power margin (P_M) is calculated as follows:

Copyright © 2014, Juniper Networks, Inc.

$P_M = P_B - LL$

$P_M = 13\ dB - 8\ km\ (0.5\ dB/km) - 7\ (0.5\ dB)$

$P_M = 13\ dB - 4\ dB - 3.5\ dB$

$P_M = 5.5\ dB$

In both examples, the calculated power margin is greater than zero, indicating that the link has sufficient power for transmission and does not exceed the maximum receiver input power.

Related Documentation

- Signal Loss in Multimode and Single-Mode Fiber-Optic Cable for the SRX5800 Services Gateway on page 293
- Attenuation and Dispersion in Fiber-Optic Cable for the SRX5800 Services Gateway on page 294
- Calculating Power Budget for Fiber-Optic Cable for the SRX5800 Services Gateway on page 295
- Connecting Network Cables to SRX5800 Services Gateway IOCs and Port Modules on page 91

Routing Engine Interface Cable and Wire Specifications for the SRX5800 Services Gateway

Table 42 on page 297 lists the specifications for the cables that connect to management ports and the wires that connect to the alarm relay contacts.

Table 42: Cable and Wire Specifications for Routing Engine Management and Alarm Interfaces

Port	Cable Specification	Cable/Wire Supplied	Maximum Length	Routing Engine Receptacle
Routing Engine console or auxiliary interface	RS-232 (EIA-232) serial cable	One 6-ft (1.83-m) length with RJ-45/DB-9 connectors	6 ft (1.83 m)	RJ-45 female
Routing Engine Ethernet interface	Category 5 cable or equivalent suitable for 100Base-T operation	One 15-ft (4.57-m) length with RJ-45/RJ-45 connectors	328 ft (100 m)	RJ-45 autosensing

Related Documentation

- Connecting the SRX5800 Services Gateway to a Management Console or an Auxiliary Device on page 89
- Connecting the SRX5800 Services Gateway to a Network for Out-of-Band Management on page 88

Copyright © 2014, Juniper Networks, Inc.

Alarm Relay Contact Wire Specifications for the SRX5800 Services Gateway

Table 43 on page 298 lists the specifications for the wires that connect to the alarm relay contacts.

Table 43: Cable and Wire Specifications for Alarm Interfaces

Port	Cable Specification	Cable/Wire Supplied
Alarm relay contacts	Wire with gauge between 28-AWG and 14-AWG (0.08 and 2.08 mm^2)	No

Related Documentation

- Connecting an SRX5800 Services Gateway to an External Alarm-Reporting Device on page 90

Console Port Cable and Wire Specifications for the SRX5800 Services Gateway

Table 44 on page 298 lists the specifications for the cable that connects a **CONSOLE** port on the Routing Engine to a management console.

Table 44: Cable and Wire Specifications for Routing Engine Management and Alarm Interfaces

Port	Cable Specification	Cable/Wire Supplied	Maximum Length	Receptacle
Routing Engine console or auxiliary interface	RS-232 (EIA-232) serial cable	One 6-ft (1.83-m) length with RJ-45/DB-9 connectors	6 ft (1.83 m)	RJ-45/DB-9 male

Related Documentation

- Connecting the SRX5800 Services Gateway to a Management Console or an Auxiliary Device on page 89
- RJ-45 Connector Pinouts for the SRX5800 Services Gateway Routing Engine Auxiliary and Console Ports on page 300

Copyright © 2014, Juniper Networks, Inc.

APPENDIX E

Cable Connector Pinouts

- RJ-45 Connector Pinouts for the SRX5800 Services Gateway Routing Engine Ethernet Port on page 299
- RJ-45 Connector Pinouts for the SRX5800 Services Gateway Routing Engine Auxiliary and Console Ports on page 300

RJ-45 Connector Pinouts for the SRX5800 Services Gateway Routing Engine Ethernet Port

The port on the Routing Engine labeled **ETHERNET** is an autosensing 10/100-Mbps Ethernet RJ-45 receptacle that accepts an Ethernet cable for connecting the Routing Engine to a management LAN (or other device that supports out-of-band management). Table 45 on page 299 describes the RJ-45 connector pinout.

Table 45: RJ-45 Connector Pinout for the Routing Engine ETHERNET Port

Pin	Signal
1	TX+
2	TX-
3	RX+
4	Termination network
5	Termination network
6	RX-
7	Termination network
8	Termination network

Related Documentation

- Routing Engine Interface Cable and Wire Specifications for the SRX5800 Services Gateway on page 297
- Connecting the SRX5800 Services Gateway to a Network for Out-of-Band Management on page 88

Copyright © 2014, Juniper Networks, Inc.

RJ-45 Connector Pinouts for the SRX5800 Services Gateway Routing Engine Auxiliary and Console Ports

The ports on the Routing Engine labeled **AUX** and **CONSOLE** are asynchronous serial interfaces that accept an RJ-45 connector. The ports connect the Routing Engine to an auxiliary or console management device. Table 46 on page 300 describes the RJ-45 connector pinout.

Table 46: RJ-45 Connector Pinout for the AUX and CONSOLE Ports

Pin	Signal	Description
1	RTS	Request to Send
2	DTR	Data Terminal Ready
3	TXD	Transmit Data
4	Ground	Signal Ground
5	Ground	Signal Ground
6	RXD	Receive Data
7	DSR/DCD	Data Set Ready
8	CTS	Clear to Send

Related Documentation

- Console Port Cable and Wire Specifications for the SRX5800 Services Gateway on page 298
- Connecting the SRX5800 Services Gateway to a Management Console or an Auxiliary Device on page 89

Copyright © 2014, Juniper Networks, Inc.

APPENDIX F

Contacting Customer Support and Returning the SRX5800 Services Gateway Hardware

- Return Procedure for the SRX5800 Services Gateway on page 301
- Locating SRX5800 Services Gateway Component Serial Numbers on page 302
- Contacting Customer Support to Obtain Return Materials Authorization for the SRX5800 Services Gateway on page 306
- Packing the SRX5800 Services Gateway or a Component for Shipment on page 307

Return Procedure for the SRX5800 Services Gateway

If a problem cannot be resolved by the JTAC technician, a Return Materials Authorization (RMA) is issued. This number is used to track the returned material at the factory and to return repaired or new components to the customer as needed.



NOTE: **Do not return any component to Juniper Networks, Inc. unless you have first obtained an RMA number. Juniper Networks, Inc. reserves the right to refuse shipments that do not have an RMA. Refused shipments will be returned to the customer via collect freight.**

For more information about return and repair policies, see the customer support Web page at http://www.juniper.net/support/guidelines.html .

To return a services gateway or component to Juniper Networks for repair or replacement:

1. Determine the part number and serial number of the services gateway or component. For the serial number locations of cards and modules such as MPCs, SPCs, port modules and Routing Engines, see the *SRX5400, SRX5600, and SRX5800 Services Gateway Card Reference* at www.juniper.net/techpubs/.
2. Obtain a Return Materials Authorization (RMA) number from JTAC.

Copyright © 2014, Juniper Networks, Inc.

NOTE: Do not return the services gateway or any component to Juniper Networks unless you have first obtained an RMA number. Juniper Networks reserves the right to refuse shipments that do not have an RMA. Refused shipments are returned to the customer via collect freight.

3. Pack the services gateway or component for shipping.

For more information about return and repair policies, see the customer support webpage at http://www.juniper.net/support/guidelines.html .

For product problems or technical support issues, open a support case using the Case Manager link at http://www.juniper.net/support/ or call 1-888-314-JTAC (within the United States) or 1-408-745-9500 (outside the United States).

Related Documentation

- Listing the SRX5800 Services Gateway Component Serial Numbers with the Command-Line Interface on page 302
- Locating the SRX5800 Services Gateway Chassis Serial Number Label on page 304
- Locating the SRX5800 Services Gateway Power Supply Serial Number Label on page 304
- Locating the SRX5800 Services Gateway Craft Interface Serial Number Label on page 305
- Information You Might Need to Supply to JTAC on page 306
- Contacting Customer Support on page 306

Locating SRX5800 Services Gateway Component Serial Numbers

- Listing the SRX5800 Services Gateway Component Serial Numbers with the Command-Line Interface on page 302
- Locating the SRX5800 Services Gateway Chassis Serial Number Label on page 304
- Locating the SRX5800 Services Gateway Power Supply Serial Number Label on page 304
- Locating the SRX5800 Services Gateway Craft Interface Serial Number Label on page 305

Listing the SRX5800 Services Gateway Component Serial Numbers with the Command-Line Interface

Before contacting Juniper Networks, Inc. to request a Return Materials Authorization (RMA), you must find the serial number on the services gateway or component. To display all of the services gateway components and their serial numbers, enter the following command-line interface (CLI) command:

```
user@host> show chassis hardware

Hardware inventory:
Item             Version  Part number  Serial number     Description
Chassis                                JN10B7ACDAGA      SRX 5800
Midplane         REV 03   710-013698   TR0813            SRX 5800 Backplane
```


Copyright © 2014, Juniper Networks, Inc.

```
FPM Board         REV 03   710-014974   KC3418           Front Panel Display
PDM               Rev 03   740-013110   QCS1122501L      Power Distribution Modu
le
PEM 1             Rev 03   740-013682   QCS1130409T      PS 1.7kW; 200-240VAC in
PEM 2             Rev 03   740-013682   QCS1130409M      PS 1.7kW; 200-240VAC in
Routing Engine 0  REV 06   740-015113   1000697051       RE-S-1300
CB 0              REV 07   710-013385   KC0433           SRX5k SCB
CB 1              REV 07   710-013385   KC0259           SRX5k SCB
FPC 6             REV 03   750-020235   JS4722           SRX5k DPC 40x 1GE
  CPU             REV 06   710-013713   JZ4019           DPC PMB
  PIC 0                    BUILTIN      BUILTIN          10x 1GE RichQ
    Xcvr 0        REV 01   740-011782   PAQ2K01          SFP-SX
    Xcvr 1        REV 01   740-014132   61531018         SFP-T
    Xcvr 2        REV 01   740-013111   7303709          SFP-T
    Xcvr 4        REV 01   740-011782   PAQ2JZP          SFP-SX
    Xcvr 5        REV 01   740-013111   8043356          SFP-T
    Xcvr 6        REV 01   740-013111   8043257          SFP-T
    Xcvr 7        REV 01   740-013111   8043300          SFP-T
    Xcvr 8        REV 01   740-013111   8043215          SFP-T
    Xcvr 9        REV 01   740-013111   8043184          SFP-T
  PIC 1                    BUILTIN      BUILTIN          10x 1GE RichQ
    Xcvr 0        0        NON-JNPR     AM0619193B       SFP-SX
    Xcvr 9        0        NON-JNPR     AJ054100PH       SFP-SX
  PIC 2                    BUILTIN      BUILTIN          10x 1GE RichQ
    Xcvr 1        REV 01   740-014132   61522010         SFP-T
    Xcvr 2        REV 01   740-013111   7303481          SFP-T
    Xcvr 4        REV 01   740-011782   PAQ2K0H          SFP-SX
    Xcvr 5        REV 01   740-013111   8043179          SFP-T
    Xcvr 6        REV 01   740-013111   7522572          SFP-T
    Xcvr 7        REV 01   740-013111   8043157          SFP-T
    Xcvr 8        REV 01   740-013111   7522678          SFP-T
    Xcvr 9        REV 01   740-013111   7522683          SFP-T
  PIC 3                    BUILTIN      BUILTIN          10x 1GE RichQ
    Xcvr 0        0        NON-JNPR     AJ06080TKC       SFP-SX
    Xcvr 9        0        NON-JNPR     AJ06020HSJ       SFP-SX
FPC 7             BB_P2_28 710-013699   JS4812           SRX5k SPC
  CPU             REV 06   710-013713   KA7426           DPC PMB
  PIC 0                    BUILTIN      BUILTIN          SPU Cp
  PIC 1                    BUILTIN      BUILTIN          SPU Flow
Fan Tray 0        REV 04   740-014971   TP1433           Fan Tray
Fan Tray 1        REV 04   740-014971   TP1636           Fan Tray
```

Most components also have a small rectangular serial number ID label (see Figure 111 on page 303) attached to the component body.

Figure 111: Serial Number ID Label



Related Documentation

- Return Procedure for the SRX5800 Services Gateway on page 301
- Locating the SRX5800 Services Gateway Chassis Serial Number Label on page 304
- Locating the SRX5800 Services Gateway Power Supply Serial Number Label on page 304
- Locating the SRX5800 Services Gateway Craft Interface Serial Number Label on page 305

Copyright © 2014, Juniper Networks, Inc.

Locating the SRX5800 Services Gateway Chassis Serial Number Label

The chassis serial number label is located on the side of the chassis (see Figure 112 on page 304).

Figure 112: SRX5800 Chassis Serial Number Label

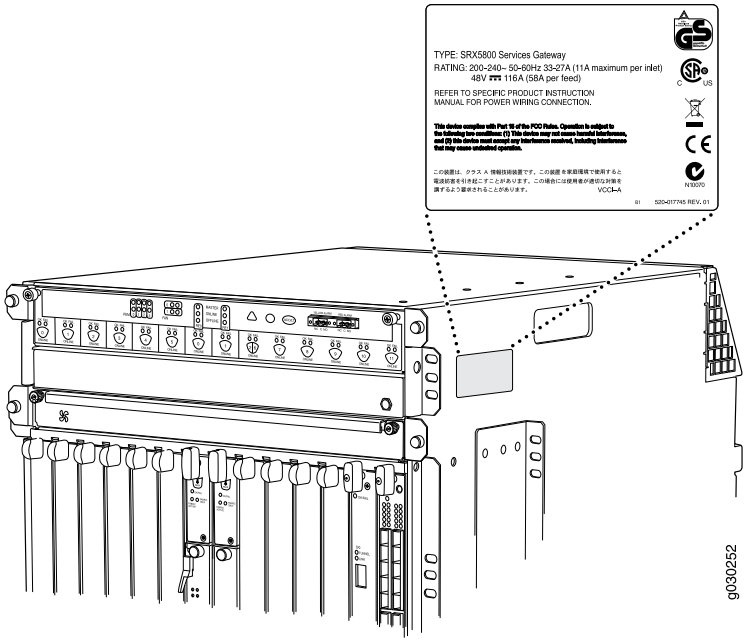

Related Documentation

- Return Procedure for the SRX5800 Services Gateway on page 301
- Listing the SRX5800 Services Gateway Component Serial Numbers with the Command-Line Interface on page 302
- Locating the SRX5800 Services Gateway Power Supply Serial Number Label on page 304
- Locating the SRX5800 Services Gateway Craft Interface Serial Number Label on page 305

Locating the SRX5800 Services Gateway Power Supply Serial Number Label

The serial number label is located on the AC power supply faceplate under the on/off switch (see Figure 113 on page 305).

The serial number label is located on the DC power supply faceplate under the circuit breaker switch (see Figure 114 on page 305).

Copyright © 2014, Juniper Networks, Inc.

Figure 113: AC Power Supply Serial Number Label

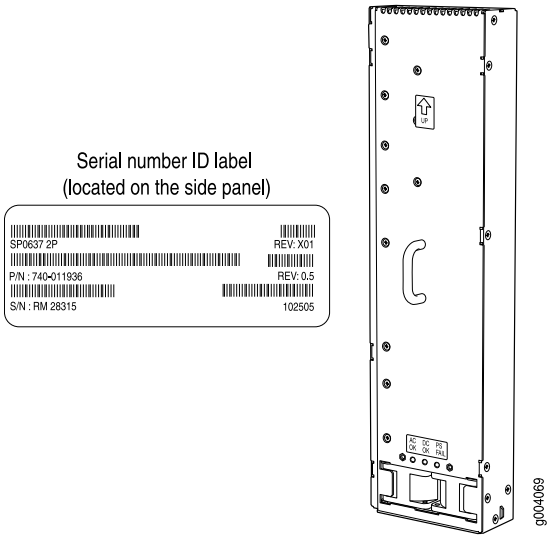

Figure 114: DC Power Supply Serial Number Label

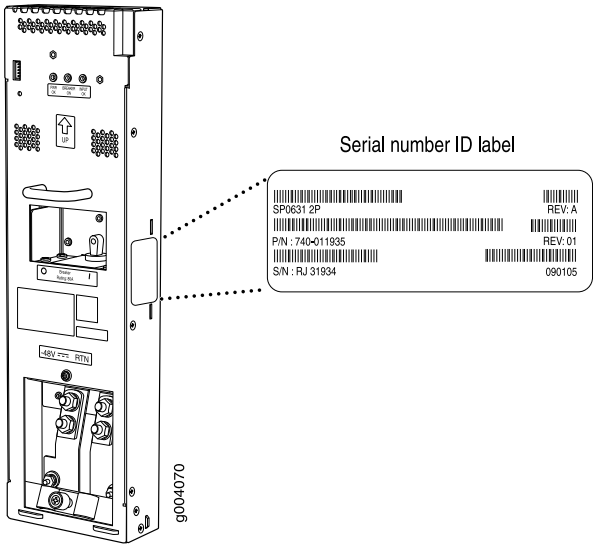

Related Documentation

- Return Procedure for the SRX5800 Services Gateway on page 301
- Listing the SRX5800 Services Gateway Component Serial Numbers with the Command-Line Interface on page 302
- Locating the SRX5800 Services Gateway Chassis Serial Number Label on page 304
- Locating the SRX5800 Services Gateway Craft Interface Serial Number Label on page 305

Locating the SRX5800 Services Gateway Craft Interface Serial Number Label

The serial number is located on the back of the craft interface panel (see Figure 115 on page 306).

Figure 115: Craft Interface Serial Number Label

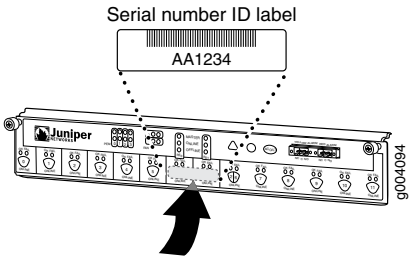

Related Documentation

- Return Procedure for the SRX5800 Services Gateway on page 301
- Listing the SRX5800 Services Gateway Component Serial Numbers with the Command-Line Interface on page 302
- Locating the SRX5800 Services Gateway Chassis Serial Number Label on page 304
- Locating the SRX5800 Services Gateway Power Supply Serial Number Label on page 304

Contacting Customer Support to Obtain Return Materials Authorization for the SRX5800 Services Gateway

- Information You Might Need to Supply to JTAC on page 306
- Contacting Customer Support on page 306

Information You Might Need to Supply to JTAC

When requesting support from JTAC by telephone, be prepared to provide the following information:

- Your existing case number, if you have one
- Details of the failure or problem
- Type of activity being performed on the services gateway when the problem occurred
- Configuration data displayed by one or more **show** commands
- Your name, organization name, telephone number, fax number, and shipping address

Related Documentation

- Contacting Customer Support on page 306

Contacting Customer Support

Once you have located the serial numbers of the services gateway or component, you can return the services gateway or component for repair or replacement. For this, you need to contact Juniper Networks Technical Assistance Center (JTAC).

You can contact JTAC 24 hours a day, 7 days a week, using any of the following methods:

- On the Web: Using the Case Manager link at http://www.juniper.net/support/

Copyright © 2014, Juniper Networks, Inc.

- By telephone:
  - From the US and Canada: 1-888-314-JTAC
  - From all other locations: 1-408-745-9500



NOTE: If contacting JTAC by telephone, enter your 11-digit case number followed by the pound (#) key if this is an existing case, or press the star (*) key to be routed to the next available support engineer.

Related Documentation

- Information You Might Need to Supply to JTAC on page 306

Packing the SRX5800 Services Gateway or a Component for Shipment

- Required Tools and Parts for Packing the SRX5800 Services Gateway on page 307
- Packing the SRX5800 Services Gateway for Shipment on page 308
- Packing SRX5800 Services Gateway Components for Shipment on page 309

Required Tools and Parts for Packing the SRX5800 Services Gateway

To remove components from the services gateway or the services gateway from a rack, you need the following tools and parts:

- 2.5-mm flat-blade (–) screwdriver, for detaching alarm relay terminal block
- 7/16-in. (11 mm) nut driver
- Blank panels to cover empty slots
- Electrostatic bag or antistatic mat, for each component
- Electrostatic discharge (ESD) grounding wrist strap
- Flat-blade (–) screwdriver
- Mechanical lift, if available
- Phillips (+) screwdrivers, numbers 1 and 2
- Rubber safety cap for fiber-optic interfaces or cable
- Wire cutters

Related Documentation

- Packing the SRX5800 Services Gateway for Shipment on page 308
- Packing SRX5800 Services Gateway Components for Shipment on page 309

Copyright © 2014, Juniper Networks, Inc.

Packing the SRX5800 Services Gateway for Shipment

To pack the services gateway for shipment:

1. Retrieve the shipping crate and packing materials in which the services gateway was originally shipped. If you do not have these materials, contact your Juniper Networks representative about approved packaging materials.
2. On the console or other management device connected to the master Routing Engine, enter CLI operational mode and issue the following command to shut down the services gateway software.

   ```
   user@host> request system halt
   ```

   Wait until a message appears on the console confirming that the operating system has halted.

   For more information about the command, see *Junos OS System Basics and Services Command Reference* at www.juniper.net/techpubs/.
3. Attach an ESD grounding strap to your bare wrist, and connect the strap to one of the ESD points on the chassis.
4. Shut down power to the services gateway by pressing the AC input switch or DC circuit breaker for all power supplies to the off (**O**) position.
5. Disconnect power from the services gateway.
6. Remove the cables that connect to all external devices.
7. Remove all field replaceable units (FRUs) from the services gateway.
8. Remove the services gateway chassis from the rack:
   - If you are using a mechanical lift, place the lift platform under the chassis, unscrew and remove the mounting screws from the rack, and move the chassis to the shipping crate.
   - If you are not using a mechanical lift and the chassis weight is fully supported by a shelf or another device, unscrew and remove the mounting screws from the rack. Three people can then lift the chassis and move it to the shipping crate.
   - If you are not using a mechanical lift and the chassis weight is not fully supported by a shelf or another device, three people should grasp the chassis while a fourth person unscrews and removes the mounting screws from the rack. The three lifters can then move the chassis to the shipping container.
9. Place the services gateway in the shipping crate or onto the pallet. If on a pallet, bolt the services gateway to the pallet.
10. Cover the services gateway with an ESD bag and place the packing foam on top of and around the services gateway.
11. Replace the accessory box on top of the packing foam.
12. Securely tape the box closed or place the crate cover over the services gateway.
13. Write the RMA number on the exterior of the box to ensure proper tracking.

Copyright © 2014, Juniper Networks, Inc.

Related Documentation

- Preventing Electrostatic Discharge Damage to the SRX5800 Services Gateway on page 241
- Powering Off the SRX5800 Services Gateway on page 106
- Disconnecting an SRX5800 Services Gateway AC Power Supply Cord on page 224
- Disconnecting an SRX5800 Services Gateway DC Power Supply Cable on page 226
- Return Procedure for the SRX5800 Services Gateway on page 301
- Required Tools and Parts for Packing the SRX5800 Services Gateway on page 307
- Packing SRX5800 Services Gateway Components for Shipment on page 309

Packing SRX5800 Services Gateway Components for Shipment

Follow these guidelines for packing and shipping individual components of the services gateway:

- When you return a component, make sure that it is adequately protected with packing materials and packed so that the pieces are prevented from moving around inside the carton.
- Use the original shipping materials if they are available.
- Place the individual component in an electrostatic bag.
- Write the Return Materials Authorization (RMA) number on the exterior of the box to ensure proper tracking.



CAUTION: **Do not stack any of the services gateway components during packing.**

Related Documentation

- Required Tools and Parts for Packing the SRX5800 Services Gateway on page 307
- Packing the SRX5800 Services Gateway for Shipment on page 308

Copyright © 2014, Juniper Networks, Inc.

Copyright © 2014, Juniper Networks, Inc.

PART 5

Index

- Index on page 313

Copyright © 2014, Juniper Networks, Inc.

Copyright © 2014, Juniper Networks, Inc.

Index

Symbols

#, comments in configuration statements....xiii
( ), in syntax descriptions....xiii
< >, in syntax descriptions....xiii
[ ], in configuration statements....xiii
{ }, in configuration statements....xiii
| (pipe), in syntax descriptions....xiii

A

AC plug types....284
AC power supply
  cord *See* AC power supply cord
  description....34
  electrical specifications....34
  high-capacity
    description....31
    electrical specifications....31
    LEDs....33
  installing....214
  removing....211, 212
  standard-capacity
    LEDs....35
  upgrading....208
AC power supply cord
  connecting....224
  disconnecting....224
  specifications....284
AC specifications
  circuit breaker....283
accessory box
  parts list....59
  removing....57
accident procedures, electrical....259
agency approvals....270
air filter
  installing....156
  maintaining....122
  removing....156
  routine inspection of....121
airflow
  required clearance around chassis for....52
alarms
  cutoff/lamp test button....21
  LEDs (red and yellow) on craft interface....21
  messages, list of....136
  relay contacts....26
    connecting wire....150
    disconnecting wire....148
    wire specifications....298
  temperature, displaying....138
altitude, acceptable range....273
antistatic mat, using....241
attenuation in fiber-optic cable....294
auxiliary port (for Routing Engine management)
  cable
    connection during initial installation....89
    connector pinouts (DB-9)....300
    replacement instructions....167
    specifications....297, 298

B

battery-handling warning....254
booting the services gateway....101, 105
braces, in configuration statements....xiii
brackets
  angle, in syntax descriptions....xiii
  square, in configuration statements....xiii

C

cable
  auxiliary or console port (for Routing Engine management)
    connecting during initial installation....89
    replacing....167
  Ethernet port (for Routing Engine management)
    connecting during initial installation....88
    replacing....167
  fiber-optic
    attenuation....294
    cleaning instructions for transceivers....128
    dispersion....294
    multimode and single-mode....293
    transmission distance, maximum....293
    wavelength ranges....293
  IOC
    connecting during maintenance....194
    disconnecting....193
    maintaining....128

Copyright © 2014, Juniper Networks, Inc.

port module
disconnecting....193
power *See* AC power supply cord
cable management system
description....43
fiber-optic cable, use with....128
cable manager
installing....230
reinstalling
after chassis installation....84
removing....230
before chassis installation....71
Card
holding....130
storing....132
card OK/Fail LEDs....23
chassis....7
alarm messages *See* alarm, messages
dimensions....7
ESD points....7
grounding points....9, 10
installing in rack....76
weight....7
checklist for site preparation....49
chromatic dispersion in fiber-optic cable....294
class 1 laser warning....251
class 1 LED warning....251
cleaning instructions
fiber-optic transceivers....128
clearance, around rack....52
CLI
as troubleshooting tool....135
command
to display chassis alarm messages....136
to display IOC status....125, 128
to display port module status....127
to display serial number....302
cold-swap-only components, description....146
commands
ping....135
show chassis alarms....136
show chassis fpc
for IOC status....125
show chassis fpc pic-status....127
show chassis hardware....302
show chassis IOC pic-status....128
traceroute....135
comments, in configuration statements....xiii
compatibility, electromagnetic....290
compliance statements for EMC requirements
Canada....271
European Community....271
Hebrew....272
Japan....272
United States....272
components
cable management system....43
chassis....7
cooling system....41
craft interface....20
field replacement....146
Flex IOC....13
host subsystem....17
IOC....13
midplane....12
power supplies....28
redundancy....5
Routing Engine....19
SCB....17
SPC....16
components, packing for shipment....309
connecting
AC power supply cord....224
DC power supply cable....227
console device
serial port settings for....89
console port (for Routing Engine management)
cable
connection during initial installation....89
connector pinout (RJ-45)....299, 300
replacement instructions....167
specifications....297, 298
conventions
notice icons....xi
text and syntax....xii
cooling system
description....41
troubleshooting....138
craft interface
alarm cutoff/lamp test button....21
alarm relay contacts....26
card OK/Fail LEDs....23
description....20
host subsystem LEDs....22
installing....149
LEDs
alarm (red and yellow)....21
offline buttons....24

Copyright © 2014, Juniper Networks, Inc.

online buttons....24
power supply LEDs....23
removing....148
routine inspection of....121
curly braces, in configuration statements....xiii
customer support, contacting....302

D
DC power
source cabling....287
DC power circuit breaker....287
DC power supply
cables *See* DC power supply cable, specifications
high-capacity
description....36
electrical specifications....36
LEDs....38
installing....219
removing....216, 217
standard-capacity
description....39
electrical specifications....39
LEDs....40
upgrading....208
DC power supply cable
connecting....227
disconnecting....226
lugs....289
specifications....289
DC specifications
electrical....286
disconnecting
AC power supply cord....224
DC power supply cable....226
dispersion in fiber-optic cable....294

E
earthquakes
tested toleration for seismic....273
EIA rack standards....51
electrical
accident procedures....259
safety guidelines and warnings....260
electrical specifications....282, 286
electricity
site wiring guidelines....290
electromagnetic
compatibility *See* EMC
pulse....290
electrostatic
bag, using to store components....241
EMC (EMI)
suppression....290
EMC requirements
Canada....271
European Community....271
Hebrew....272
Japan....272
United States....272
EMP....290
environmental specifications....273
ESD
preventing damage to components by....241
Ethernet port (for Routing Engine management)
cable
connection during initial installation....88
replacement instructions....167
specifications....297
ETSI rack standards....51

F
fan tray
installing....153
maintaining....123
reinstalling
after chassis installation....80
removing....151
before chassis installation....72
troubleshooting....138
fan trays
description....41
field-replaceable units
listed....146
fire safety requirements....243
Flex I/O Card *See* Flex IOC
Flex IOC....13
removing....173
font conventions....xii

G
grounding (electrical) specifications....280
grounding cable
attachment points for....280
connecting....96

Copyright © 2014, Juniper Networks, Inc.

lug specifications....281
specifications....282
guidelines, electrical safety....260

H
higher-order mode loss (HOL)....293
host subsystem
description....17
LEDs....22
hot-pluggable components, description....146
hot-removable and hot-insertable components, description....146
humidity (relative), acceptable....273

I
I/O Card *See* IOC
installation
AC power, connecting....97
instructions warning....245
parts received, verifying....59
unpacking the services gateway....57
installation instructions
alarm relay contact wires
tools required....87
cable, auxiliary or console port (for Routing Engine management)
for maintenance or replacement....167
tools required....87
cable, Ethernet port (for Routing Engine management)
for maintenance or replacement....167
tools required....87
cable, IOC
for maintenance or replacement....194
cable, port module
for maintenance or replacement....194
DC power and grounding cables
tools required....87
installing
AC power supply....214
air filter....156
alarm relay contact wires
during initial installation....90
for maintenance or replacement....148, 150
cable manager....230
cable, auxiliary or console port (for Routing Engine management)
during initial installation....89
cable, Ethernet port (for Routing Engine management)
during initial installation....88
craft interface....149
DC power supply....219
DC power, connecting....102
fan tray....153
IOC....170
IOC, connecting....91
power and grounding cables
tools required....95
Installing
SPC....198
instructions
cleaning *See* cleaning instructions
maintenance
IOC....128
port module....127
interference
electromagnetic....290
radio frequency....290
IOC....13
cable
installation instructions....194
removal instructions....193
connecting....91
installing....170
maintaining....125
maintenance....128
removing....168
status, checking....125, 128, 139
troubleshooting....139

J
jewelry removal warning....255
Juniper Technical Assistance Center (JTAC)....138, 306

L
laser beam warning....252
laser safety guidelines....250
LEDs
alarm (red and yellow on craft interface)
description....21
card OK/Fail....23
high-capacity AC power supply....33
high-capacity DC power supply....38
host subsystem....22
on components....137

Copyright © 2014, Juniper Networks, Inc.

on craft interface....136
power supplies....23
standard-capacity AC power supply....35
standard-capacity DC power supply....40
lightning activity warning....256
link loss, calculating....295
lugs for DC power cables....289

M

maintaining
air filter....122
fan tray....123
IOC....125, 128
maintenance guidelines
IOC....125, 128
IOC cable....128
port module....127
midplane....12
description....12
functions....12
modal dispersion in fiber-optic cable....294
mode loss, higher-order....293
MTU....13
multimode fiber-optic cable *See* cable, fiber-optic

N

notice icons....xi

O

offline buttons
craft interface....24
online buttons
craft interface....24
operating temperature warning....257
overview
services gateway....3

P

packing services gateway
components for shipment....309
parentheses, in syntax descriptions....xiii
PEMs *See* power supplies
physical specifications....7
ping command....135
pinouts
RJ-45 cable connector ports (auxiliary/console)....300
RJ-45 Ethernet cable connector port....299
plug types
AC....284
port module
cable
removal instructions....193
maintenance....127
status, checking....127
troubleshooting....140
power
budget calculation for fiber-optic cable....295
cables and cords *See* AC power supply cord; DC power cables
consumption....275
margin calculation....295
provisioning....275
surges....290
power supplies
AC electrical specifications....282
cables *See* DC power
DC electrical specifications....286
description....28
LEDs....23
power supply
reinstalling
after chassis installation....79
removing
before chassis installation....70
Power supply
upgrading from standard-capacity to high-capacity....208
power system
troubleshooting....142
powering off the services gateway....106
powering on the services gateway....101, 105
product disposal warning....258
provisioning
power....275

Q

qualified personnel warning....238

R

rack
clearance around, required....52
mounting bracket hole spacing....52
size and strength required....51
standards, EIA and ETSI....51
rack mounting
shelves....10

Copyright © 2014, Juniper Networks, Inc.

rack requirements
mounting....246
radiation from open port apertures warning....253
radio frequency interference, preventing....290
redundancy....5
reinstalling
cable manager
after chassis installation....84
fan tray
after chassis installation....80
power supply
after chassis installation....79
relative humidity, acceptable....273
removal instructions
cable
auxiliary or console port (for Routing Engine management)....167
Ethernet port (for Routing Engine management)....167
IOC....193
port module....193
removing
AC power supply....211, 212
air filter....156
alarm relay contact wires....148
cable manager....230
before chassis installation....71
craft interface....148
DC power supply....216, 217
fan tray....151
before chassis installation....72
IOC....168
power supply
before chassis installation....70
SPC....196
transceiver....206
repair policies....302
restricted access area warning....239
return materials authorization....301
return procedure....301
RFI....290
RJ-45 cable connector pinouts....299, 300
RMA *See* return materials authorization
Routing Engine
description....19
for dual chassis cluster control link....19
management ports
cable and wire specifications....298
USB port....19

S

safety guidelines, laser....250
safety requirements
fire....243
fire suppression equipment....243
SCB
description....17
seismic (earthquake)....273
serial number
in output from show chassis hardware command....302
services gateway
parts list....59
physical specifications....7
returning....301
unpacking....57
weight....7
Services Processing Card *See* SPC
Services Processing Unit *See* SPU
shipment
packing the components....309
shipping container
unpacking....57
weight....57
show chassis alarms command....136, 138, 142
show chassis fpc command
for IOC status....125
show chassis fpc pic-status command....127, 128
show chassis hardware command....302
show chassis IOC command....139
show chassis IOC detail command....139
show chassis SPC command....141
show chassis SPC detail command....141
signal dispersion....293
signaling, distance limitations....290
single-mode fiber-optic cable *See* cable, fiber-optic
site
electrical wiring specifications....290
environmental specifications....273
preparation
checklist....49
routine inspection....121
SPC....16
installing....198
removing....196
status, checking....141
troubleshooting....141

Copyright © 2014, Juniper Networks, Inc.

specifications
AC power supply cord....284
cable
power....289
Routing Engine management ports....297, 298
clearance around rack....52
DC power supply cable....289
electrical....284
cable and wiring....290
environmental....273
rack
front-mount flange hole spacing....52
mounting bracket hole spacing....52
size and strength....51
thermal output....273
wires to external alarm-reporting devices....298
SPU....16
startup, system
monitoring....101, 105
support, requesting from JTAC....306
surge protection....290
Switch Control Board *See* SCB
syntax conventions....xii

T

temperature, acceptable range....273
thermal output....273
tolerances
environmental....273
tools required
chassis
returning for repair or replacement....307
hardware components
returning for repair or replacement....307
maintaining....121
replacement....146
traceroute command....135
transceiver
description....206
installing....207
removing....206
transmission distances, fiber-optic cable....293
troubleshooting
CLI commands....135
cooling system....138
fans....138
IOC....139
port module....140
power system....142
SPC....141

U

U (rack unit)....51
unpacking the services gateway....57
Upgrading
from standard-capacity to high capacity power supplies....208

W

warning
battery-handling....254
class 1 laser....251
class 1 LED....251
electrical safety guidelines....260
installation instructions....245
jewelry removal....255
laser beam....252
lightning activity....256
operating temperature....257
product disposal....258
rack-mount requirements....246
radiation from open apertures....253
wavelength ranges supported by fiber-optic cable....293
wiring, electrical *See* electricity

Copyright © 2014, Juniper Networks, Inc.

Copyright © 2014, Juniper Networks, Inc.