# 3-AXSIS DIGITAL ACCELERATION SENSOR MODULE

SEN-MMA5482Q

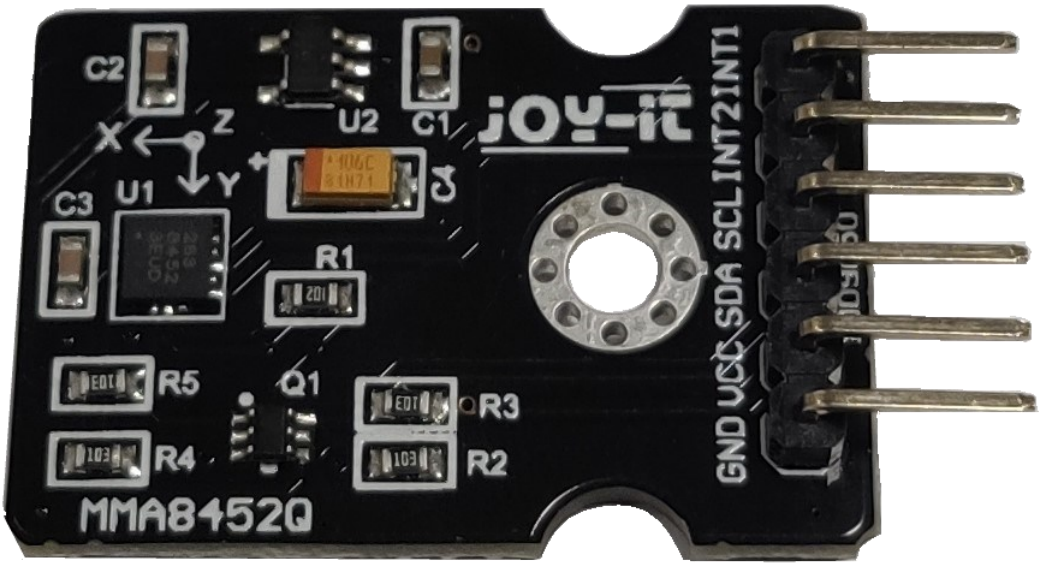


## 1. GENERAL INFORMATION

Dear customer,

Thank you very much for choosing our product. In the following, we will show you what you need to consider during commissioning and use.

Should you unexpectedly encounter problems during use, please do not hesitate to contact us.

## 2. COMMISSIONING WITH THE RASPBERRY PI

### Wiring:

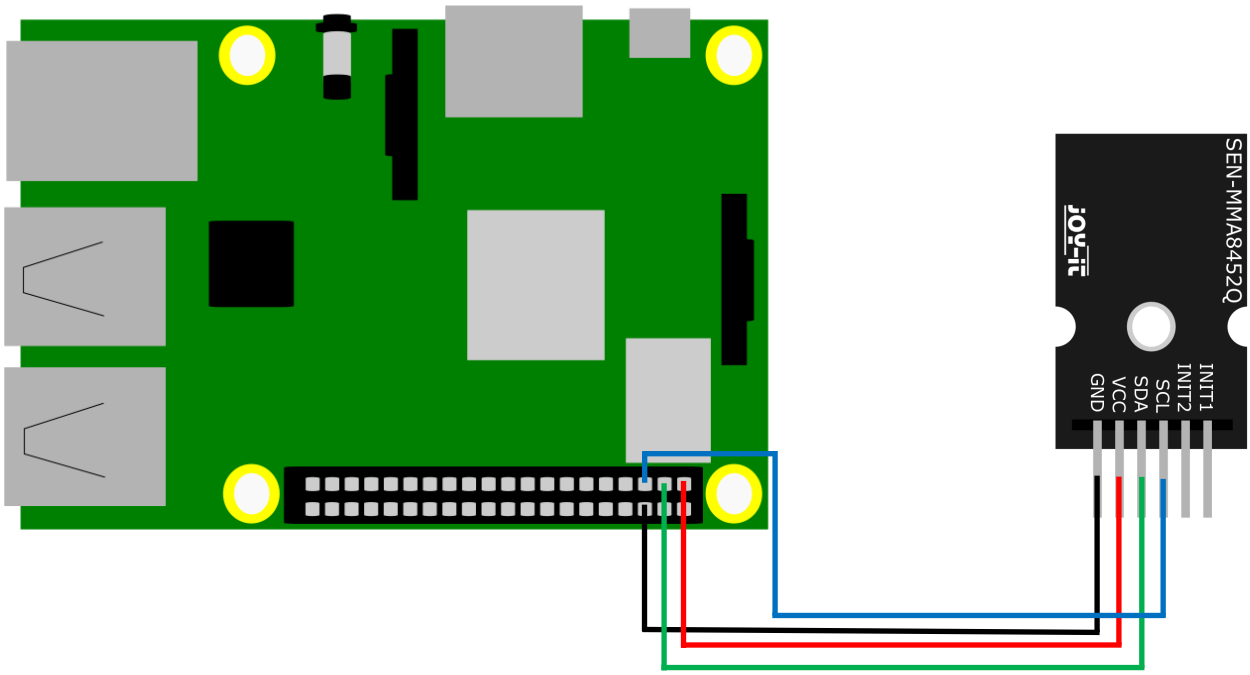


| Raspberry Pi | MMA8452Q |
|---|---|
| GND (Pin 6) | GND |
| 3v3 (Pin 1) | VCC |
| SDA (Pin 3) | SDA |
| SCL (Pin 5) | SCL |

### Installation:

To be able to use the ADC, you have to enable I2C.
Enter the following command:

```
sudo raspi-config
```

Now navigate to the point **Interfacing Options** -> **I2C** and enable the I2C interface.

Now create a file with the extension ".py" and copy the code example into it.

Then execute this file with the console command shown below:

```
sudo python file-name.py
```

You should now see the values of the three axes as a console output.

**Code example:**

```
# Distributed with a free-will license.
# Use it any way you want, profit or free, provided it fits in the licenses of its
# associated works.
import smbus
import time

# Get I2C bus
bus = smbus.SMBus(1)

# MMA8452Q address, 0x1D(28)
# Select Control register, 0x2A(42)
#         0x00(00)  StandBy mode
bus.write_byte_data(0x1D, 0x2A, 0x00)
# MMA8452Q address, 0x1D(28)
# Select Control register, 0x2A(42)
#         0x01(01)  Active mode
bus.write_byte_data(0x1D, 0x2A, 0x01)
# MMA8452Q address, 0x1D(28)
# Select Configuration register, 0x0E(14)
#         0x00(00)  Set range to +/- 2g
bus.write_byte_data(0x1D, 0x0E, 0x00)

time.sleep(0.5)

# MMA8452Q address, 0x1D(28)
# Read data back from 0x00(0), 7 bytes
# Status register, X-Axis MSB, X-Axis LSB, Y-Axis MSB, Y-Axis LSB, Z-Axis MSB, Z-Axis LSB
data = bus.read_i2c_block_data(0x1D, 0x00, 7)

# Convert the data
xAccl = (data[1] * 256 + data[2]) / 16
if xAccl > 2047 :
     xAccl -= 4096

yAccl = (data[3] * 256 + data[4]) / 16
if yAccl > 2047 :
     yAccl -= 4096

zAccl = (data[5] * 256 + data[6]) / 16
if zAccl > 2047 :
     zAccl -= 4096

# Output data to screen
print "Acceleration in X-Axis : %d" %xAccl
print "Acceleration in Y-Axis : %d" %yAccl
print "Acceleration in Z-Axis : %d" %zAccl
```

## 3. COMMISSIONING WITH THE ARDUINO

**Wiring:**

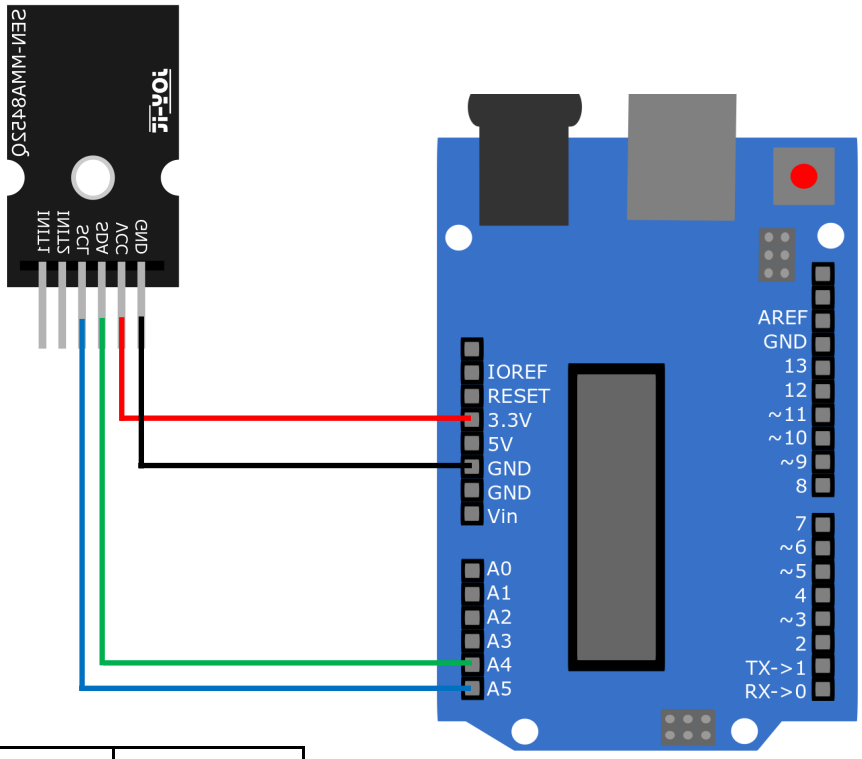


| ARD-Uno | MMA8452Q |
|---|---|
| 3.3V | VCC |
| GND | GND |
| A4 (SDA) | SDA |
| A5 (SCL) | SCL |

To use the sensor with the Arduino, you must first install a library.

Go to **Tools** -> **Manage libraries...**

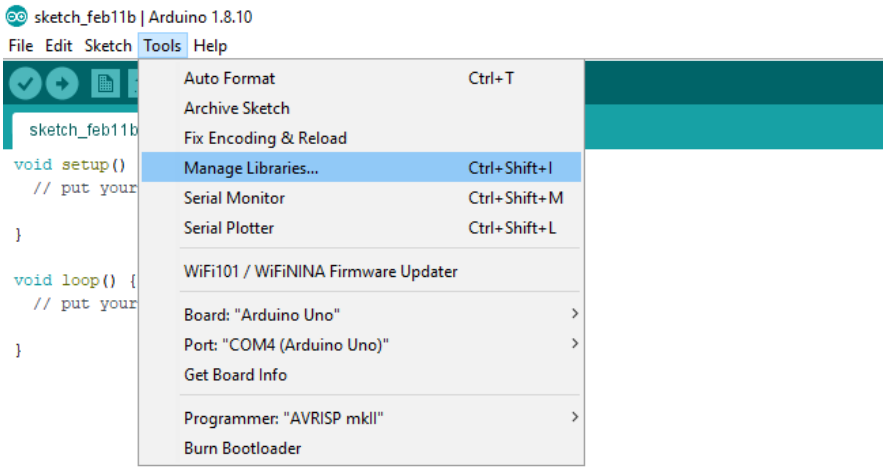

Now enter mma8452q in the search box above and install the library **SparkFun MMA8452Q Accelerometer**.

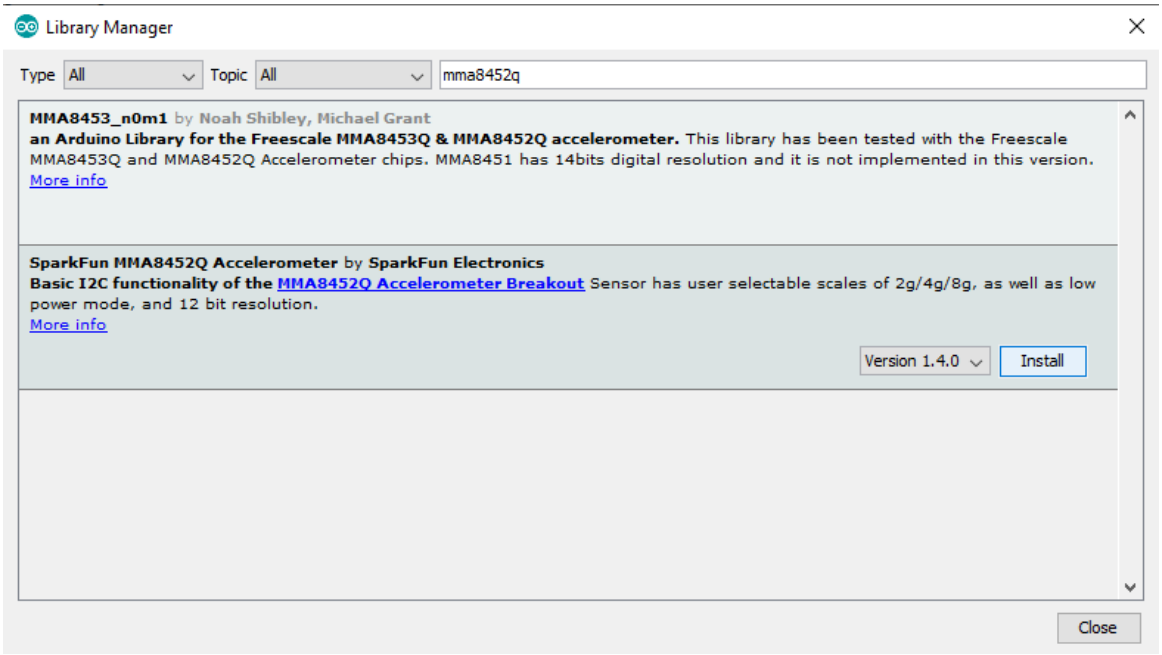


You can now select one of the example files under **File** -> **Examples** -> **SparkFun MMA8452Q Accelerometer** and upload it to your Arduino.

Go to **Tools** and make sure you selected the correct **board** and **port** .

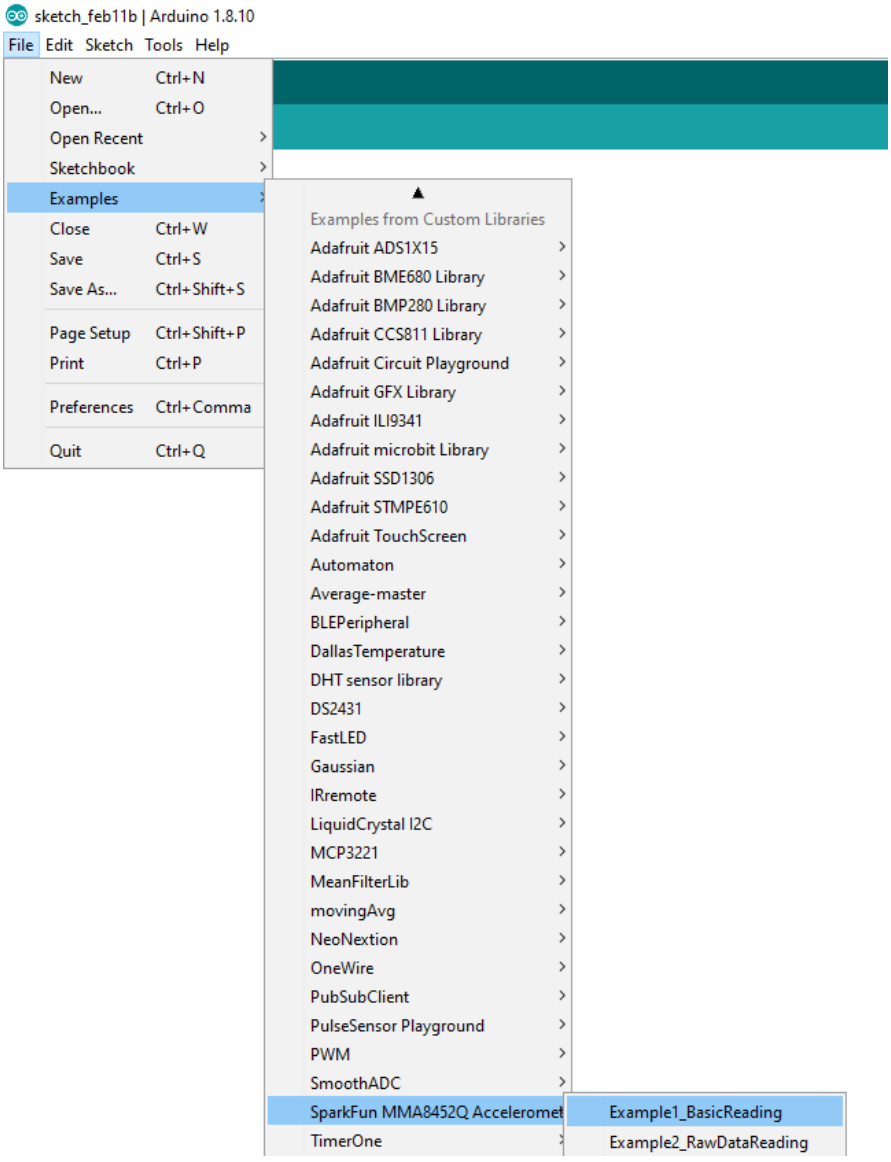

## 4. ADDITIONAL INFORMATION

Our information and take-back obligations according to the Electrical and Electronic Equipment Act (ElektroG)

**Symbol on electrical and electronic equipment:**



This crossed-out dustbin means that electrical and electronic appliances do not belong in the household waste. You must return the old appliances to a collection point.
Before handing over waste batteries and accumulators that are not enclosed by waste equipment must be separated from it.

**Return options:**
As an end user, you can return your old device (which essentially fulfils the same function as the new device purchased from us) free of charge for disposal when you purchase a new device.
Small appliances with no external dimensions greater than 25 cm can be disposed of in normal household quantities independently of the purchase of a new appliance.

**Possibility of return at our company location during opening hours:**
Simac GmbH, Pascalstr. 8, D-47506 Neukirchen-Vluyn, Germany

**Possibility of return in your area:**
We will send you a parcel stamp with which you can return the device to us free of charge. Please contact us by e-mail at Service@joy-it.net or by telephone.

## 5. SUPPORT

If there are still any issues pending or problems arising after your purchase, we will support you by e-mail, telephone and with our ticket support system.

E-Mail: service@joy-it.net

Ticket system: http://support.joy-it.net

Telephone: +49 (0)2845 98469-66 (10-17 o‘clock)

Veröffentlicht: 11.02.2020