The Diamond Hitch

America's Premium Gooseneck Hitch

DH1101

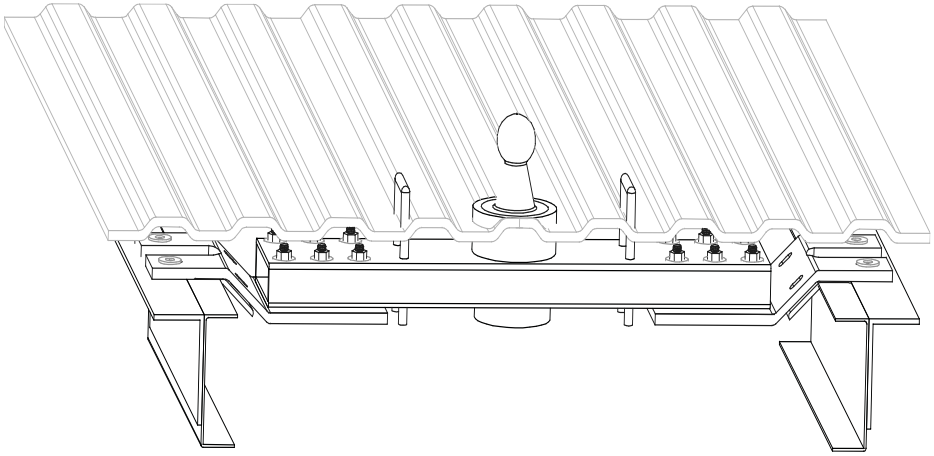

The Diamond Hitch is rated to 30,000 lb. Gross Towing Weight and 7,500 lb. tongue weight.

WARNING

Refer to your vehicle's owner's manual for maximum towing capacity. DO NOT overload your vehicle - failure to follow vehicle manufacturer's recommendations could result in damage to your vehicle, personal injury or death.

******** WARRANTY CAUTION ********

INSTALLATION MUST BE PERFORMED BY A QUALIFIED MECHANIC WITH TECHNICAL KNOWLEDGE OF BASIC MECHANICAL SKILLS

INSTALL & SAFETY GUIDE

Blue Ox
One Mill Road, Industrial Park
Pender, NE 68047
Phone 402-385-3051 Fax 402-385-3360
Online: http:www.blueox.us
http://www.diamondhitchinc.com
E-mail: sales@diamondhitchinc.com

• WARRANTY CAUTION •

INSTALLATION MUST BE PERFORMED BY A QUALIFIED MECHANIC WITH TECHNICAL KNOWLEDGE OF BASIC MECHANICAL SKILLS.

SAFETY NOTES FOR THE DIAMOND HITCH

1. Read all instructions and safety precautions before proceeding with installations.

2. Do not use any open flame under the truck bed to cut or weld. There is extreme danger of explosion or fire.

3. Vehicle must be securely blocked and brakes set before working underneath.

4. Do not clamp hitch over any wiring or brake lines.

5. Always make sure trailer is loaded slightly tongue heavy. Do not pull trailer that is lighter on the tongue end.

6. The ball is properly latched when the flat surface of the ball stud is level with the cylinder. When the ball is in the latched position it will not rotate or move up and down.

7. Re-torque the bolts after the first 500 miles of trailer towing; thereafter check during normal service.

8. The installer must instruct the operator on proper ball installation and locking procedures.

General Installation Procedures

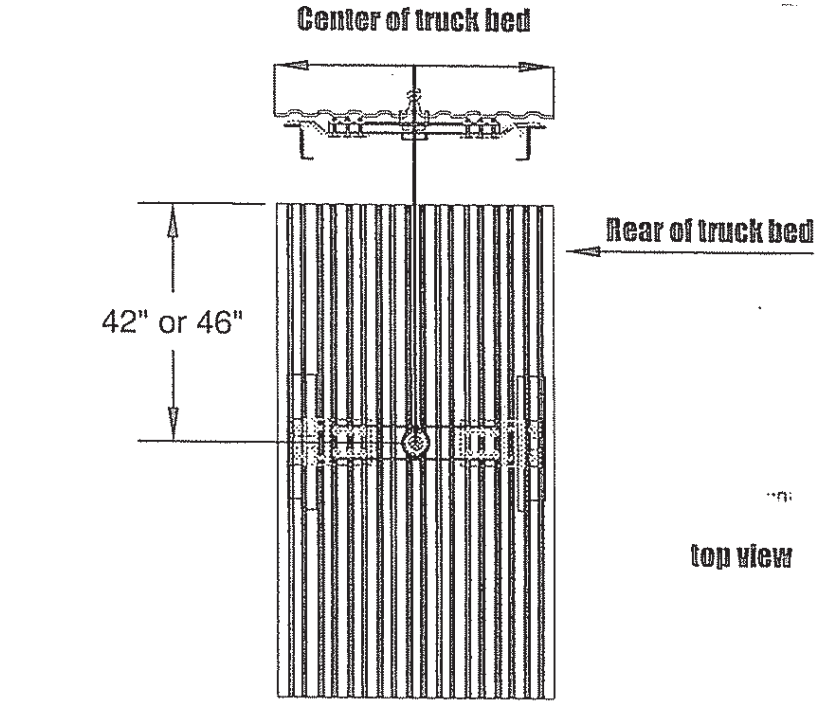

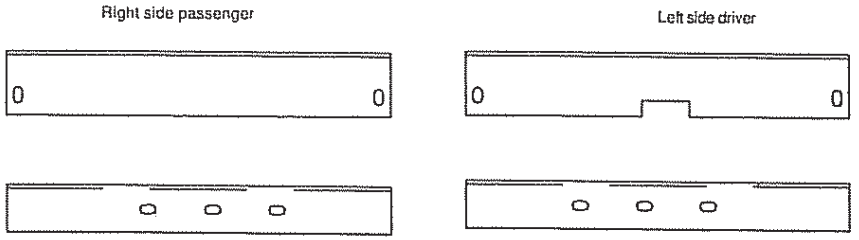

HARDWARE

8- 1/2” x 3-1/4” Bolts
8- 1/2” x 2” Bolts
4- 1/2” x 1-1/2” Bolts
20- 1/2” Flange Nuts
20- 1/2” Flat Washers
4- 1/2” Helical Compression Springs

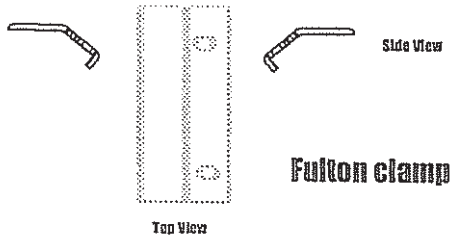

DIAMOND HITCH INSTALLATION INSTRUCTIONS
DODGE SHORT AND LONG BEDS: 1994-2002
1500 1/2 TON, 2500 3/4 TON, 3500 1 TON [DGE-101]

1. Remove the spare tire.
2. Measure from the rear of the bed along the center of the truck bed:
   Long Bed: 46 inches
   Short Bed: 42 inches
3. Cut a four inch diameter hole in the center using a quality hole saw.
4. Insert 8- 1/2”x3-1/4” bolts with flat washer on the head into the center 2”x6” rectangular tube assembly.
5. Attach the 1/2”x6” Z assembly on one side of the 2”x6” rectangular tube. Torque bolts to 75 ft/lbs. **NOTE:** Position the rectangular tube with the locking slot in the top of the cylinder toward the driver side.
6. Insert the 2”x6” rectangular tube from the bottom of the bed, support the rectangular tube from the top side of the bed.
7. Attach the second 1/2”x6” Z assembly to the 2”x6” rectangular tube using the bolts inserted in step 4, with a 1/2” flange nut, no flat washer. Torque bolts to 75ft/lbs.
8. Install the Fulton Clamp utilizing 1/2”x2” bolts with flat washers and flange nuts, leave bolts loose.
9. Install the outer L-brackets utilizing the 1/2”x1-1/2” bolts with flat washers and flange nut. Do not tighten the outer L-brackets at this time. On short-bed applications remove metal alignment stirrup to gain access to the front factory hole in the frame.
10. Install 1/2”x2” bolts with flat washers and flange nuts into the slots on the Z assembly through the outer L-bracket with nuts facing down.
11. Install the outer L-brackets.
    Fastener Sequence on L-brackets from inside of the frame outward:
    The L-bracket with 1”x2-3/4” cut out, goes on driver side.
    Fit Horizontal Slots to match Z assembly Slots.
    Front Slot: 1/2”x 1-1/2” bolt, flat washer, frame, L-bracket, flat washer, flange nut.
    Rear Slot: 1/2”x 1-1/2” bolt, flat washer, frame, L-bracket, flat washer, flange nut.
12. Release 2”x6” rectangular tube from the upper support.
13. Tighten Bolts to **75 ft/lbs of torque** as follows:
    -Eight 1/2”x3-1/4” bolts rectangular tube to the Z assembly.
    -Four 1/2”x2” bolts through the Z assembly to the Fulton Clamp, adjust as needed for frame taper, slide up as far as possible inside the frame.
    -Four 1/2”x1-1/2” bolts attaching the outside L-bracket to the truck frame, elevation of the L-bracket, flush with the top of the frame.
    -Four 1/2”x2” bolts attaching the Z assembly to outside L-bracket.
14. Drill four 1/2” holes upward through the 2”x6” rectangular tube for breakaway cable tie points.
15. Install the breakaway cable tie points with one spring and nut per leg, lift above bed ~ 1-1/2”.

NOTE: Universal screw nail clip NAPA Part Number: 665-1125 (bag of 13) or Part Number 665-1129 (bag of 50) replaces the factory plastic fender clips.

PARTS LIST

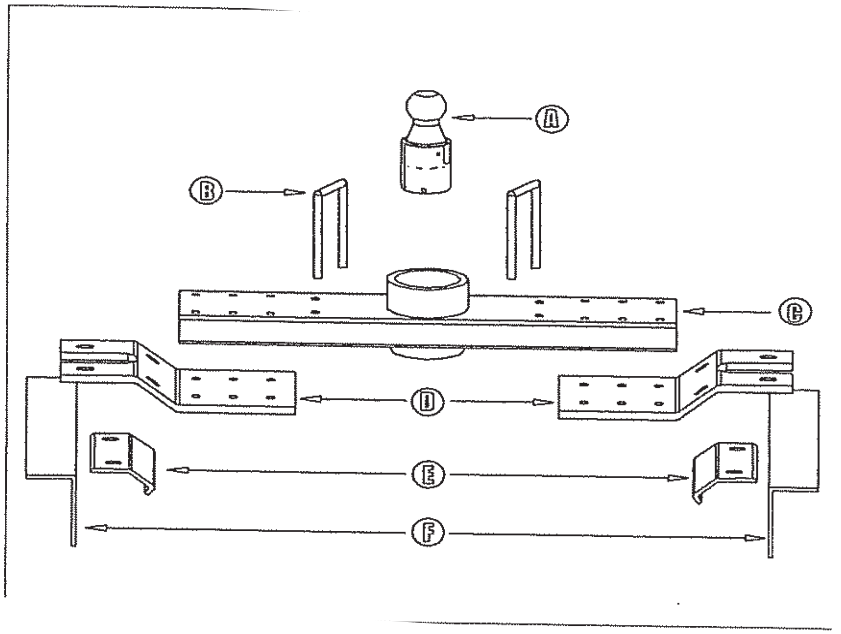

A: Ball Stud: Twin Lock or Inverta (1x)
B: Breakaway Cable Tie Point (U-Bolt) (2x) left + right
C: Rectangular Tube (2”x6”) and Receiver Cylinder
D: Z Assembly (Gator Plate) (2x) left + right
E: Fulton Clamp (2x) left + right
F: L-Bracket (2x) left + right

Front of Vehicle

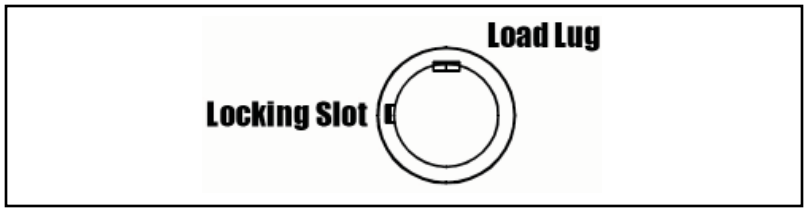

Install the Cross member with the locking slot toward the driver's side.

The load lug in the cylinder should be toward the cab or front of the vehicle.

Inverta Ball Installation and Removal

To Install the Inverta Ball:

1. Align Pin A with slot B in ball assembly. Drop ball assembly into receiver cylinder and depress locking tab if required.

2. Twist the ball 30 degrees clockwise while lifting slightly until ball drops into position and locking tab snaps into slot.

To Remove the Inverta Ball:

1. Push in locking tab and then lift and rotate the ball assembly counterclockwise. Continue rotating and lifting until the ball stud clears the receiver cylinder.

To Store the Inverta Ball:

1. Align pin A with slot C in ball assembly.
2. Push in the locking tab and let the ball assembly drop into the receiver cylinder.
3. Pull the ball straight up to remove it.

