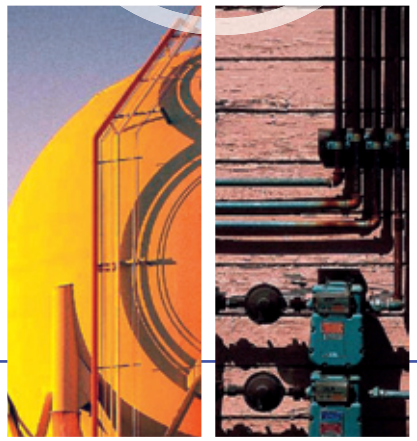

Pressure

- HD 2124.1, HD 2124.2, HD 2304.0 — pag. PR-2
  Portable manometers, thermometers
- HD 2114.0, HD 2114.2, HD 2134.0, HD 2134.2, HD 2164.0, HD 2164.2, HD 2114B.0, HD 2114B.2 — pag. PR-7
  Micro-manometers, barometers, thermometers
- DO 9704 — pag. PR-10
  Portable pressure and temperature meter, datalogger
- HD 3604T…, HD 36V4T… — pag. PR-13
  Relative pressure transmitters, DIN 43650 connector, stainless steel membrane
- HD 2004T…, HD 20V4T… — pag. PR-15
  Absolute or relative pressure transmitters, DIN 43650 connector, stainless steel or alumina membrane
- HD 408T, HD 4V8T — pag. PR-17
  Relative or differential pressures transmitters with respect to atmosphere
- HD 4V8T Baro — pag. PR-18
  Barometric transmitter
- HD 402T — pag. PR-19
  Relative or differential pressures transmitters with respect to atmosphere
- HD 404T — pag. PR-23
  Very low relative or differential pressures transmitters
- HD 9408T BARO, HD 9408TR BARO, HD 9908T BARO — pag. PR-28
  Barometric (pressure) transmitters
- HD 9408PS 50 — pag. PR-30
  Static port for barometric measures
- HD 2601V.1, HD 2601V.2 — pag. PR-32
  Led displays for 4...20mA passive transmitter with one or two inputs.

• Accredited ACCREDIA LAT calibration laboratory N° 124 for Pressure — pag. PR-34

The qualitative level of our instruments is the result of a continuous evolving of the product itself. This way bring to slight differences between what reported on this manual and the instruments you bought. We can not completely exclude the presence of errors for which we apologise. Data, images and descriptions included in this catalogue can not be enforced legally. We reserve the right to perform any modification and correction at any time without notice.

HD 2124.1
HD 2124.2



HD2124.1 AND HD2124.2
MANOMETER-THERMOMETER

HD2124.1 and **HD2124.2** are **two inputs** portable instruments with a large LCD display. They perform measure of absolute, relative, differential pressure and temperature. In order to measure the pressure you use the electronic module PP471 that works as an interface between the instrument and Delta Ohm probes series TP704 and TP705. Temperature is measured by means of Pt100 with SICRAM module or direct 4 wires Pt100 probes for immersion, penetration, contact or air. Temperature probes are equipped with SICRAM module and factory calibration data are stored inside so that when the instrument is on it soon recognizes them. The **HD2124.2 is a data logger**. It stores up to 32.000 samples which can be transferred into a PC connected to the instrument through the RS232C and USB 2.0 serial ports. It is possible to configure the storage interval, the printing and the baud rate by the menu.
Both models are equipped with RS232C serial port and they can transfer the acquired measures, in real time, to a PC or a portable printer. Functions Max, Min and Avg calculate maximum, minimum and average values. Peak function detects the presence of pressure peaks; A-B calculates the difference of the pressures or temperatures measured by the two input channels A and B. Further functions are: REL relative measure, HOLD and automatic switching-off system, excludable.
Instruments have IP66 protection degree.

INSTRUMENT TECHNICAL CHARACTERISTICS

Instrument

Dimensions (Length x Width x Height)	185x90x40mm
Weight	470g (complete with batteries)
Materials	ABS, rubber
Display	2x4½ characters plus symbols Visible area: 52x42mm

Operating conditions

Operating temperature	-5…50°C
Storage temperature	-25…65°C
Working relative humidity	0…90%RH without condensation
Protection degree	**IP66**

Power supply

Batteries	4 1.5V type AA batteries
Autonomy	200 hours with 1800mAh alkaline batteries
Current absorbed with instrument off	20µA
Mains	Output mains adapter 12Vdc / 1000mA

Measuring unit	°C - °F - Pa - hPa - mbar - bar - atm mmHg - mmH_2O - kgf/cm^2 - PSI - inchHg
Security of data stored	Unlimited, independently of battery charge conditions

Time

Date and time	In real time
Accuracy	1min/month max drift

*Measured values storage - model **HD2124.2***

Type	2000 pages of 16 samples each
Quantity	32,000 pairs of samples
Storage interval	1,5,10,15,30s; 1,2,5,10,15,20,30min; 1hour

Serial interface RS232C

Type	RS232C electrically isolated
Baud rate	Can be set from 1200 to 38400 baud
Data bit	8
Parity	None
Stop bit	1
Flow Control	Xon/Xoff
Serial cable length	Max 15m
Print interval	Immediate or 1,5,10,15,30s; 1,2,5,10,15,20,30min; 1hour

*USB interface - model **HD2124.2***

Type	1.1 - 2.0 electrically isolated

Connections

Input module for the probes	2 8-pole male DIN45326 connectors
Serial interface	8-pole MiniDin connector
USB interface - model **HD2124.2**	Mini USB type B
Mains adapter	2-pole connector (positive at centre)

Measurement of temperature by Instrument

Pt100 measurement range	-200…+650°C
Resolution	0.1°C
Instrument accuracy	±0.1°C
Drift after 1 year	0.1°C/year

TECHNICAL DATA FOR INSTRUMENT EQUIPPED WITH PROBES AND MODULES

Measurement of pressure by module PP471

All TP704 and TP705 series Delta Ohm probes can be connected to the PP471 module. For the technical characteristics of the single probes, see the table pressure probes below.

Technical characteristics of PP471 module

Accuracy	±0.05% of full scale
Peak duration	≥ 5ms
Peak accuracy	±0.5% of full scale
Peak dead band	≤ 2% of full scale

TECHNICAL DATA OF PROBES AND MODULES EQUIPPED WITH INSTRUMENT

Temperature probes Pt100 sensor with SICRAM module

Model	Type	Application field	Accuracy
TP472I	Immersion	-196°C…+500°C	±0.25°C (-196°C…+300°C) ±0.5°C (+300°C…+500°C)
TP472I.0 1/3 DIN Thin Film	Immersion	-50°C…+300°C	±0.25°C (-50°C…+300°C)
TP473P.I	Penetration	-50°C…+400°C	±0.25°C (-50°C…+300°C) ±0.5°C (+300°C…+400°C)
TP473P.0 1/3 DIN Thin Film	Penetration	-50°C…+300°C	±0.25°C (-50°C…+300°C)
TP474C.I	Contact	-50°C…+400°C	±0.3°C (-50°C…+300°C) ±0.5°C (+300°C…+400°C)
TP474C.0 1/3 DIN Thin Film	Contact	-50°C…+300°C	±0.3°C (-50°C…+300°C)
TP475A.0 1/3 DIN Thin Film	Air	-50°C…+250°C	±0.3°C (-50°C…+250°C)
TP472I.5	Penetration	-50°C…+400°C	±0.3°C (-50°C…+300°C) ±0.6°C (+300°C…+400°C)
TP472I.10	Penetration	-50°C…+400°C	±0.30°C (-50°C…+300°C) ±0.6°C (+300°C…+400°C)
TP49A.0 Class A Thin Film	Immersion	-70°C…+250°C	±0.3°C (-70°C…-50°C) ±0.25°C (-50°C…+250°C)
TP49AC.0 Class A Thin Film	Contact	-70°C…+250°C	±0.3°C (-70°C…-50°C) ±0.25°C (-50°C…+250°C)
TP49AP.0 Class A Thin Film	Penetration	-70°C…+250°C	±0.3°C (-70°C…-50°C) ±0.25°C (-50°C…+250°C)
TP875.I	Globe-thermometer Ø150mm	-30°C…+120°C	±0.25°C
TP876.I	Globe-thermometer Ø50mm	-30°C…+120°C	±0.25°C
TP87.0 1/3 DIN Thin Film	Immersion	-50°C…+200°C	±0.25°C
TP878.0 1/3 DIN Thin Film TP878.1.0 1/3 DIN Thin Film	Photovoltaic	+4°C…+85°C	±0.25°C
TP879.0 1/3 DIN Thin Film	Compost	-20°C…+120°C	±0.25°C

Common features

Temperature drift @20°C 0.003%/°C

4 wires Pt100 probes

Model	Type	Application field	Accuracy
TP47.100.0 1/3 DIN Thin Film	4 wires Pt100	-50…+250°C	1/3 DIN
TP87.100.0 1/3 DIN Thin Film	4 wires Pt100	-50…+200°C	1/3 DIN

Common features

Temperature drift @20°C

Pt100 0.003%/°C



HD2124.2



CP23

A To the portable data loggers of the series **HD21….2** a serial port mini USB type HID (Human Interface Device) has been inserted.
For the connection to a PC with the cable USB type A - MiniUSB type B code CP23, **it is not necessary to load any driver USB**.

B For the connection of the models **HD21….1** to the USB port of a PC, is necessary the USB/serial converter **C.206**. The converter is supplied with its own drivers which must be installed before the connection of the converter to the PC.(see details in the Cd-Rom supplied with the converter).

C The port with the miniDin connector in all included models, is a serial port type RS232C.
The serial port RS232C of a PC or the printer HD40.1 can be connected by the cable HD2110CSNM.

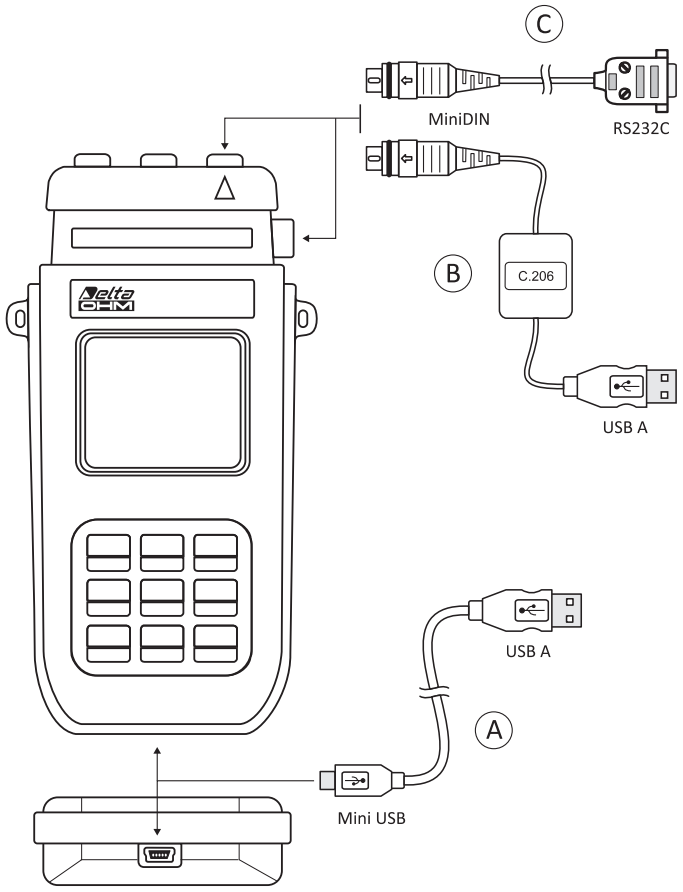

ORDERING CODES

HD2124.1: The kit consists of instrument HD2124.1, 4 per 1.5V alkaline batteries, instruction manual, case and DeltaLog9 software. **Probes, PP471 module and cables have to be ordered separately.**

HD2124.2: The kit consists of instrument HD2124.2 **data logger**, 4 per 1.5V alkaline batteries, instruction manual, case and DeltaLog9 software. **Probes, PP471 module and cables have to be ordered separately.**

HD2110CSNM: 8-pole connection cable MiniDin - Sub D 9-pole female for RS232C.

C.206: Cable for instruments of the series HD21…1 to connect directly to USB input of PC.

CP23: Connection cable USB 2.0 connector type A - MiniUSB type B.

DeltaLog9: Software for download and management of data on a PC using Windows operating systems.

SWD10: Stabilized power supply at 230Vac/12Vdc-1000mA mains voltage.

HD40.1: Portable serial input, 24 column thermal printer, 58mm paper width. It uses the cable HD2110 CSNM (optional).

Pressure probes equipped with SICRAM module

PP471: Interfacing SICRAM module between instrument and Delta Ohm probes of the series TP704 and TP705. Cable 2 meters long.

The list of pressure probes is outlined in the table below.

Temperature probes equipped with SICRAM module

TP472I: Immersion probe, Wire Wound Pt100 sensor. Stem Ø 3 mm, length 300 mm. Cable 2 meters long.

TP472I.0: Immersion probe, Thin Film Pt100 sensor. Stem Ø 3 mm, length 230 mm. Cable 2 meters long.

TP473P.I: Penetration probe, Wire Wound Pt100 sensor. Stem Ø 4mm, length 150 mm. Cable 2 meters long.

TP473P.0: Penetration probe, Thin Film Pt100 sensor. Stem Ø 4mm, length 150 mm. Cable 2 meters long.

TP474C.I: Contact probe, Wire Wound Pt100 sensor. Stem Ø 4mm, length 230mm, contact surface Ø 5mm. Cable 2 meters long.

TP474C.0: Contact probe, Thin Film Pt100 sensor. Stem Ø 4mm, length 230mm, contact surface Ø 5mm. Cable 2 meters long.

TP475A.0: Air probe, Thin Film Pt100 sensor. Stem Ø 4mm, length 230mm. Cable 2 meters long.

TP472I.5: Penetration probe, Thin Film Pt100 sensor. Stem Ø 6mm, length 500 mm. Cable 2 meters long.

TP472I.10: Penetration probe, Thin Film Pt100 sensor. Stem Ø 6mm, length 1000mm. Cable 2 meters long.

TP49A.0: Immersion probe, Thin Film Pt100 sensor. Stem Ø 2.7mm, length 150mm. Cable 2 meters long. Aluminium handle.

TP49AC.0: Contact probe, Thin Film Pt100 sensor. Stem Ø 4 mm, length 150mm. Cable 2 meters long. Aluminium handle.

TP49AP.0: Penetration probe, Thin Film Pt100 sensor. Stem Ø 2.7mm, length 150mm. Cable 2 meters long. Aluminium handle.

TP875.I: Globe thermometer Ø 150 mm with handle. Wire Wound Pt100 sensor complete of SICRAM module. Cable 2 meters long.

TP876.I: Globe thermometer Ø 50 mm with handle. Wire Wound Pt100 sensor complete of SICRAM module. Cable 2 meters long.

TP87.0: Immersion probe, Thin Film Pt100 sensor. Stem Ø 3 mm, length 70 mm. Cable 2 meters long.

TP878.0: Contact probe for solar panels. Thin Film Pt100 sensor. Cable 2 meters long.

TP878.1.0: Contact probe for solar panels. Thin Film Pt100 sensor .Cable 5 meters long

TP879.0: Penetration probe for compost. Thin Film Pt100 sensor. Stem Ø 8 mm, length 1000mm. Cable 2 meters long.

Temperature probes without SICRAM module

TP47.100.0: Immersion probe, Thin Film Pt100 sensor probe. Stem Ø 3 mm, length 230mm. 4 wires connection cable with connector, 2 meters long.

TP47: Only connector for probe connection without SICRAM module: direct 3 and 4 wires Pt100, 2 wires Pt1000.

TP87.100.0 Immersion probe, Thin Film Pt100 sensor. Stem Ø 3 mm, length 70mm. Cable 2 meters long. 4 wires connection cable with connector 1 meter long.

PRESSURE PROBE TABLE

Full scale pressure	Maximum overpressure	Resolution	ORDERING CODES			Accuracy From 20 to 25°C	Working temperature	Connection
			Differential pressure	Relative pressure (compared to atmosphere)	Absolute pressure			
			NON insulated membrane	Insulated membrane	Insulated membrane			
10.0 mbar	20.0 mbar	0.01 mbar	• **TP705-10MBD**			0.5 % F.S.	0..60 °C	Tube Ø 5 mm
20.0 mbar	40.0 mbar	0.01 mbar	• **TP705-20MBD**			0.5 % F.S.	0..60 °C	Tube Ø 5 mm
50.0 mbar	100 mbar	0.01 mbar	**TP705-50MBD**			0.5 % F.S.	0..60 °C	Tube Ø 5 mm
100 mbar	200 mbar	0.1 mbar	**TP705-100MBD**			0.25 % F.S.	0..60 °C	Tube Ø 5 mm
				TP704-100MBGI		0.25 % F.S.	-10..+80 °C	¼ BSP
200 mbar	400 mbar	0.1 mbar	**TP705-200MBD**			0.25 % F.S.	0..60 °C	Tube Ø 5 mm
				TP704-200MBGI		0.25 % F.S.	-10..+80 °C	¼ BSP
400 mbar	1000 mbar	0.1 mbar		**TP704-400MBGI**		0.25 % F.S.	-10..+80 °C	¼ BSP
500 mbar	1000 mbar	0.1 mbar	**TP705-500MBD**			0.25 % F.S.	0..60 °C	Tube Ø 5 mm
600 mbar	1000 mbar	0.1 mbar		**TP704-600MBGI**		0.25 % F.S.	-40..125 °C	¼ BSP
1.00 bar	2.00 bar	1 mbar	**TP705-1BD**			0.25 % F.S.	0..60 °C	Tube Ø 5 mm
					TP705BARO	0.25 % F.S.	0..60 °C	Tube Ø 5 mm
				TP704-1BGI		0.25 % F.S.	-40..125 °C	¼ BSP
					TP704-1BA	0.25 % F.S.	-40..125 °C	¼ BSP
2.00 bar	4.00 bar	1 mbar	**TP705-2BD**			0.25 % F.S.	0..60 °C	Tube Ø 5 mm
				TP704-2BGI		0.25 % F.S.	-40..+125 °C	¼ BSP
					TP704-2BAI *	0.25 % F.S.	-25..+85 °C	¼ BSP
5.00 bar	10.00 bar	1 mbar		**TP704-5BGI**		0.25 % F.S.	-40..+125 °C	¼ BSP
					TP704-5BAI *	0.25 % F.S.	-25..+85 °C	¼ BSP
10.00 bar	20.0 bar	0.01 bar		**TP704-10BGI**		0.25 % F.S.	-40..+125 °C	¼ BSP
					TP704-10BAI *	0.25 % F.S.	-25..+85 °C	¼ BSP
20.0 bar	40.0 bar	0.01 bar		**TP704-20BGI**		0.25 % F.S.	-40..+125 °C	¼ BSP
					TP704-20BAI *	0.25 % F.S.	-25..+85 °C	¼ BSP
50.0 bar	100.0 bar	0.01 bar		**TP704-50BGI**		0.25 % F.S.	-40..+125 °C	¼ BSP
					TP704-50BAI *	0.25 % F.S.	-25..+85 °C	¼ BSP
100 bar	200 bar	0.1 bar		**TP704-100BGI**		0.25 % F.S.	-40..+125 °C	¼ BSP
					TP704-100BAI *	0.25 % F.S.	-25..+85 °C	¼ BSP
200 bar	400 bar	0.1 bar		**TP704-200BGI**		0.25 % F.S.	-40..+125 °C	¼ BSP
					TP704-200BAI *	0.25 % F.S.	-25..+85 °C	¼ BSP
500 bar	1000 bar	0.1 bar		**TP704-500BGI**		0.25 % F.S.	-40..+125 °C	¼ BSP
	700 bar	0.1 bar			**TP704-500BAI ***	0.25 % F.S.	-25..+85 °C	¼ BSP

* Ceramic diaphragm
• Only report of calibration, no Accredia certificate

HD 2304.0



HD2304.0
MANOMETER - THERMOMETER

The **HD2304.0** is a portable instrument with a large LCD display. It performs measurements of absolute, relative and differential pressure, and temperature. The PP471 electronic module is used to measure the pressure. The PP471 electronic module works as an interface between the instrument and the TP704 and TP705 series Delta Ohm probes. The temperature is detected with immersion, penetration, contact or air Pt100 probes with SICRAM module or 4 wire direct Pt100 probes. The temperature probes are fitted with SICRAM module and the factory calibration settings are memorized inside. Upon turning on, the instrument automatically detects them. The Max, Min and Avg function calculate the maximum, minimum or average values. Other functions include: the relative measurement REL, the HOLD function, and the automatic turning off that can also be excluded. **The instrument has IP67 protection degree.**

INSTRUMENT TECHNICAL SPECIFICATIONS

Instrument

Dimensions (Length x Width x Height)	140x88x38mm
Weight	160g (complete with batteries)
Materials	ABS
Display	2x4½ characters plus symbols Visible area: 52x42mm

Operating conditions

Operating temperature	-5…50°C
Storage temperature	-25…65°C
Working relative humidity	0…90%RH without condensation
Protection degree	**IP67**

Power

Batteries	3 1.5V type AA batteries
Autonomy	200 hours with 1800mAh alkaline batteries
Power absorbed with instrument off	< 20µA

Measuring unit °C - °F - Pa - hPa - kPa - mbar - bar - atm mmHg - mmH_2O - kgf/cm^2 - PSI - inchHg

Connections

Input module for the probes: 8-pole male DIN45326 connector

Measurement of temperature by Instrument

Pt100 measurement range	-200…+650°C
Resolution	0.1°C
Instrument accuracy	±0.1°C
Drift after 1 year	0.1°C/year

TECHNICAL SPECIFICATIONS OF PROBES AND MODULES IN LINE WITH THE INSTRUMENTS

Measurement of pressure by module PP471

All TP704 and TP705 series Delta Ohm probes can be connected to the PP471 module. For the technical specifications of each probe see the table pressure probe below.

Technical specifications of PP471 module

Accuracy: ±0.05% of full scale

TECHNICAL DATA OF PROBES AND MODULES EQUIPPED WITH INSTRUMENT
Temperature probes Pt100 sensor with SICRAM module

Model	Type	Application field	Accuracy
TP472I	Immersion	-196°C…+500°C	±0.25°C (-196°C…+300°C) ±0.5°C (+300°C…+500°C)
TP472I.0 1/3 DIN Thin Film	Immersion	-50°C…+300°C	±0.25°C (-50°C…+300°C)
TP473P.I	Penetration	-50°C…+400°C	±0.25°C (-50°C…+300°C) ±0.5°C (+300°C…+400°C)
TP473P.0 1/3 DIN Thin Film	Penetration	-50°C…+300°C	±0.25°C (-50°C…+300°C)
TP474C.I	Contact	-50°C…+400°C	±0.3°C (-50°C…+300°C) ±0.5°C (+300°C…+400°C)
TP474C.0 1/3 DIN Thin Film	Contact	-50°C…+300°C	±0.3°C (-50°C…+300°C)
TP475A.0 1/3 DIN Thin Film	Air	-50°C…+250°C	±0.3°C (-50°C…+250°C)
TP472I.5	Penetration	-50°C…+400°C	±0.3°C (-50°C…+300°C) ±0.6°C (+300°C…+400°C)
TP472I.10	Penetration	-50°C…+400°C	±0.30°C (-50°C…+300°C) ±0.6°C (+300°C…+400°C)
TP49A.0 Class A Thin Film	Immersion	-70°C…+250°C	±0.3°C (-70°C…-50°C) ±0.25°C (-50°C…+250°C)
TP49AC.0 Class A Thin Film	Contact	-70°C…+250°C	±0.3°C (-70°C…-50°C) ±0.25°C (-50°C…+250°C)
TP49AP.0 Class A Thin Film	Penetration	-70°C…+250°C	±0.3°C (-70°C…-50°C) ±0.25°C (-50°C…+250°C)
TP875.I	Globe-thermometer Ø150mm	-30°C…+120°C	±0.25°C
TP876.I	Globe-thermometer Ø50mm	-30°C…+120°C	±0.25°C
TP87.0 1/3 DIN Thin Film	Immersion	-50°C…+200°C	±0.25°C
TP878.0 1/3 DIN Thin Film TP878.1.0 1/3 DIN Thin Film	Photovoltaic	+4°C…+85°C	±0.25°C
TP879.0 1/3 DIN Thin Film	Compost	-20°C…+120°C	±0.25°C

Common features

Temperature drift @20°C: 0.003%/°C

4 wires Pt100 probes without SICRAM module

Model	Type	Application field	Accuracy
TP47.100.0 1/3 DIN Thin Film	4 wires Pt100	-50…+250°C	1/3 DIN
TP87.100.0 1/3 DIN Thin Film	4 wires Pt100	-50…+200°C	1/3 DIN

Common features

Temperature drift @20°C
Pt100: 0.003%/°C

ORDERING CODES

HD2304.0: The kit consists of the instrument HD2304.0, 3 1.5V alkaline batteries, operating manual, case. **Probes and interface module PP471 have to be ordered separately.**

Pressure probes equipped with SICRAM module

PP471: Interfacing SICRAM module between instrument and Delta Ohm probes of the series TP704 and TP705. Cable 2 meters long.

The list of pressure probes is outlined in the technical data table.

Temperature probes equipped with SICRAM module

TP472I: Immersion probe, Wire Wound Pt100 sensor. Stem Ø 3 mm, length 300 mm. Cable 2 meters long.

TP472I.0: Immersion probe, Thin Film Pt100 sensor. Stem Ø 3 mm, length 230 mm. Cable 2 meters long.

TP473P.I: Penetration probe, Wire Wound Pt100 sensor. Stem Ø 4mm, length 150 mm. Cable 2 meters long.

TP473P.0: Penetration probe, Thin Film Pt100 sensor. Stem Ø 4mm, length 150 mm. Cable 2 meters long.

TP474C.I: Contact probe, Wire Wound Pt100 sensor. Stem Ø 4mm, length 230mm, contact surface Ø 5mm. Cable 2 meters long.

TP474C.0: Contact probe, Thin Film Pt100 sensor. Stem Ø 4mm, length 230mm, contact surface Ø 5mm. Cable 2 meters long.

TP475A.0: Air probe, Thin Film Pt100 sensor. Stem Ø 4mm, length 230mm. Cable 2 meters long.

TP472I.5: Penetration probe, Thin Film Pt100 sensor. Stem Ø 6mm, length 500 mm. Cable 2 meters long.

TP472I.10: Penetration probe, Thin Film Pt100 sensor. Stem Ø 6mm, length 1000mm. Cable 2 meters long.

TP49A.0: Immersion probe, Thin Film Pt100 sensor. Stem Ø 2.7mm, length 150mm. Cable 2 meters long. Aluminium handle.

TP49AC.0: Contact probe, Thin Film Pt100 sensor. Stem Ø 4 mm, length 150mm. Cable 2 meters long. Aluminium handle.

TP49AP.0: Penetration probe, Thin Film Pt100 sensor. Stem Ø 2.7mm, length 150mm. Cable 2 meters long. Aluminium handle.

TP875.I: Globe thermometer Ø 150 mm with handle. Wire Wound Pt100 sensor complete of SICRAM module. Cable 2 meters long.

TP876.I: Globe thermometer Ø 50 mm with handle. Wire Wound Pt100 sensor complete of SICRAM module. Cable 2 meters long.

TP87.0: Immersion probe, Thin Film Pt100 sensor. Stem Ø 3 mm, length 70 mm. Cable 2 meters long.

TP878.0: Contact probe for solar panels. Thin Film Pt100 sensor. Cable 2 meters long.

TP878.1.0: Contact probe for solar panels. Thin Film Pt100 sensor .Cable 5 meters long

TP879.0: Penetration probe for compost. Thin Film Pt100 sensor. Stem Ø 8 mm, length 1000mm. Cable 2 meters long.

Temperature probes without SICRAM module

TP47.100.0: Immersion probe, Thin Film Pt100 sensor probe. Stem Ø 3 mm, length 230mm. 4 wires connection cable with connector, 2 meters long.

TP47: Only connector for probe connection without SICRAM module: direct 3 and 4 wires Pt100, 2 wires Pt1000.

TP87.100.0 Immersion probe, Thin Film Pt100 sensor. Stem Ø 3 mm, length 70mm. Cable 2 meters long. 4 wires connection cable with connector 1 meter long.

mbar

PRESSURE PROBE TABLE

Full scale pressure	Maximum overpressure	Resolution	ORDERING CODES			Accuracy From 20 to 25°C	Working temperature	Connection
			Differential pressure	Relative pressure (compared to atmosphere)	Absolute pressure			
			NON insulated membrane	Insulated membrane	Insulated membrane			
10.0 mbar	20.0 mbar	0.01 mbar	• TP705-10MBD			0.5 % F.S.	0..60 °C	Tube Ø 5 mm
20.0 mbar	40.0 mbar	0.01 mbar	• TP705-20MBD			0.5 % F.S.	0..60 °C	Tube Ø 5 mm
50.0 mbar	100 mbar	0.01 mbar	TP705-50MBD			0.5 % F.S.	0..60 °C	Tube Ø 5 mm
100 mbar	200 mbar	0.1 mbar	TP705-100MBD			0.25 % F.S.	0..60 °C	Tube Ø 5 mm
				TP704-100MBGI		0.25 % F.S.	-10..+80 °C	¼ BSP
200 mbar	400 mbar	0.1 mbar	TP705-200MBD			0.25 % F.S.	0..60 °C	Tube Ø 5 mm
				TP704-200MBGI		0.25 % F.S.	-10..+80 °C	¼ BSP
400 mbar	1000 mbar	0.1 mbar		TP704-400MBGI		0.25 % F.S.	-10..+80 °C	¼ BSP
500 mbar	1000 mbar	0.1 mbar	TP705-500MBD			0.25 % F.S.	0..60 °C	Tube Ø 5 mm
600 mbar	1000 mbar	0.1 mbar		TP704-600MBGI		0.25 % F.S.	-40..125 °C	¼ BSP
1.00 bar	2.00 bar	1 mbar	TP705-1BD			0.25 % F.S.	0..60 °C	Tube Ø 5 mm
					TP705BAR0	0.25 % F.S.	0..60 °C	Tube Ø 5 mm
				TP704-1BGI		0.25 % F.S.	-40..125 °C	¼ BSP
					TP704-1BA	0.25 % F.S.	-40..125 °C	¼ BSP
2.00 bar	4.00 bar	1 mbar	TP705-2BD			0.25 % F.S.	0..60 °C	Tube Ø 5 mm
				TP704-2BGI		0.25 % F.S.	-40..+125 °C	¼ BSP
					TP704-2BAI *	0.25 % F.S.	-25..+85 °C	¼ BSP
5.00 bar	10.00 bar	1 mbar		TP704-5BGI		0.25 % F.S.	-40..+125 °C	¼ BSP
					TP704-5BAI *	0.25 % F.S.	-25..+85 °C	¼ BSP
10.00 bar	20.0 bar	0.01 bar		TP704-10BGI		0.25 % F.S.	-40..+125 °C	¼ BSP
					TP704-10BAI *	0.25 % F.S.	-25..+85 °C	¼ BSP
20.0 bar	40.0 bar	0.01 bar		TP704-20BGI		0.25 % F.S.	-40..+125 °C	¼ BSP
					TP704-20BAI *	0.25 % F.S.	-25..+85 °C	¼ BSP
50.0 bar	100.0 bar	0.01 bar		TP704-50BGI		0.25 % F.S.	-40..+125 °C	¼ BSP
					TP704-50BAI *	0.25 % F.S.	-25..+85 °C	¼ BSP
100 bar	200 bar	0.1 bar		TP704-100BGI		0.25 % F.S.	-40..+125 °C	¼ BSP
					TP704-100BAI *	0.25 % F.S.	-25..+85 °C	¼ BSP
200 bar	400 bar	0.1 bar		TP704-200BGI		0.25 % F.S.	-40..+125 °C	¼ BSP
					TP704-200BAI *	0.25 % F.S.	-25..+85 °C	¼ BSP
500 bar	1000 bar	0.1 bar		TP704-500BGI		0.25 % F.S.	-40..+125 °C	¼ BSP
	700 bar	0.1 bar			TP704-500BAI *	0.25 % F.S.	-25..+85 °C	¼ BSP

* Ceramic diaphragm
• Only report of calibration, no Accredia certificate



HD2304.0



PP471



TP704…

TP705…

HD2114.0
HD2114.2
HD2134.0
HD2134.2
HD2164.0
HD2164.2
HD2114B.0
HD2114B.2



HD2114.0, HD2114.2, HD2134.0, HD2134.2, HD2164.0 HD2164.2 MANOMETER - THERMOMETER HD2114B.0, HD2114B.2 BAROMETER - THERMOMETER

These are portable instruments with a large LCD display. They measure absolute, relative and differential pressure, as well as temperature.
Pressure is measured using an internal module which is differential with respect to the atmosphere with fixed full scale. With the PP471 module acting as an interface, the instrument can use all the TP704 and TP705 series Delta Ohm probes to perform the measurements. **The HD2114B.0 and HD2114B.2 internal module measures the barometric pressure.**
The temperature is detected using immersion, penetration, contact or air probes, with SICRAM module or direct 4 wire probes. The sensor can be a Pt100 or Pt1000. Temperature probes are equipped with SICRAM module and factory calibration data are stored inside so that when the instrument is on it soon recognizes them.
The HD2114.2, HD2134.2, HD2164.2 and HD2114B.2 instruments are **dataloggers**. They store up to 36,000 samples which can be transferred to a PC via the RS232C and USB 2.0 serial ports. The storing interval, printing, and baud rate can be configured using the menu. They can transfer the acquired measurements in real time to a PC or to a portable printer (p.e. the HD40.1) with the RS232C serial port.
The *Max, Min* and *Avg* function calculates the maximum, minimum or average values. **The Peak function can be activated with external probes connected to the module PP471** and detects the presence of pressure peaks. Other functions include: the relative measurement REL, the HOLD function, and the automatic turning off which can also be excluded.
The instruments have IP66 protection degree.

INSTRUMENT TECHNICAL CHARACTERISTICS

Instrument

Dimensions (Length x Width x Height)	185x90x40mm
Weight	470g (complete with batteries)
Materials	ABS, rubber
Display	2x4½ digits plus symbols Visible area: 52x42mm

Operating conditions

Working temperature	-5…50°C
Storage temperature	-25…65°C
Working relative humidity	0…90%RH without condensation
Protection degree	**IP66**

Power supply

Batteries	4 1.5V type AA batteries
Autonomy	200 hours with 1800mAh alkaline batteries
Power absorbed with instrument off	20µA
Mains - models **HD21...4.2**	Output mains adapter 12Vdc / 1000mA

Measuring unit	°C - °F - Pa - hPa - kPa - mbar - bar - atm mmHg - mmH_2O - kgf/cm^2 - PSI - inchHg
Security of logged data	Unlimited, independent of battery charge conditions

Time

Date and time	Real time
Accuracy	1min/month max drift

*Measured values storage - models **HD21...4.2***

Type	2000 pages containing 18 samples each
Quantity	36000 samples (pressure - temperature)
Storage interval	1,5,10,15,30s; 1,2,5,10,15,20,30min; 1hour

*Serial interface RS232C - models **HD21...4.2***

Type	RS232C electrically isolated
Baud rate	Can be set from 1200 to 38400 baud
Data bit	8
Parity	None
Stop bit	1
Flow Control	Xon/Xoff
Serial cable length	Max 15m
Print interval	Immediate or 1,5,10,15,30s; 1,2,5,10,15,20,30min; 1hour

*USB interface - models **HD21...4.2***

Type	1.1 - 2.0 electrically isolated

Connections

Input modules for the probes	2 quick couplings Ø 5mm
Serial interface models **HD21...4.2**	8-pole MiniDin connector
USB interface models **HD21...4.2**	Mini USB type B connector
Mains adapter - models **HD21...4.2**	2-pole connector (positive at centre)



HD2114.2



PP471

	HD2114.0	HD2134.0	HD2164.0	HD2114B.0	HD2114.2	HD2134.2	HD2164.2	HD2114B.2
Full scale	±20mbar	±200mbar	±2000mbar	600..1100mbar	±20mbar	±200mbar	±2000mbar	600..1100 mbar
Barometer	-	-	-	✓	-	-	-	✓
Datalogger	-	-	-	-	✓	✓	✓	✓
RS232C-USB	-	-	-	-	✓	✓	✓	✓
External power supply	-	-	-	-	✓	✓	✓	✓

Measurement of pressure using the internal sensor

	HD2114.0 HD2114.2	HD2134.0 HD2134.2	HD2164.0 HD2164.2	HD2114B.0 HD2114B.2
Full scale	±20mbar	±200mbar	±2000mbar	600..1100mbar
Maximum overpressure	±300mbar	±1bar	±6bar	3bar
Resolution	0.001mbar	0.01mbar	0.1mbar	0.1mbar
Accuracy @23°C	±0.3%f.s.	±(0.1%f.s.+0.1% measurement)		±0.3mbar
Working temperature	0…60°C			
Connection	quick couplings Ø5mm			
Compensation temperature	0…60°C			
Drift on zero	±1%f.s.	±0.5%f.s.	±0.5%f.s.	±0.3%f.s.
Drift on span	±1%f.s.	±0.5%f.s.	±0.5%f.s.	±0.3%f.s.
Fluid contacting the membrane	non corrosive air and gas			

Measurement of temperature by Instrument

Pt100 measurement range	-200…+650°C
Pt1000 measurement range	-200…+650°C
Resolution	0.1°C
Instrument accuracy	±0.1°C
Drift after 1 year	0.1°C/year

TECHNICAL SPECIFICATIONS OF PROBES AND MODULES IN LINE WITH THE INSTRUMENT

Pressure measurement by module PP471

All TP704 and TP705 series Delta Ohm probes can be connected to the PP471 module. See the table pressure probes at page PR-9 for the technical specifications of the individual probes.

Technical specifications of the PP471 module

Accuracy	±0.05% of full scale
Peak duration	≥ 5ms
Peak accuracy	±0.5% of full scale
Peak dead band	≤ 2% of full scale

TECHNICAL DATA OF PROBES AND MODULES EQUIPPED WITH INSTRUMENT

Temperature probes Pt100 sensor with SICRAM module

Model	Type	Application field	Accuracy
TP472I	Immersion	-196°C…+500°C	±0.25°C (-196°C…+300°C) ±0.5°C (+300°C…+500°C)
TP472I.0 1/3 DIN Thin Film	Immersion	-50°C…+300°C	±0.25°C (-50°C…+300°C)
TP473P.I	Penetration	-50°C…+400°C	±0.25°C (-50°C…+300°C) ±0.5°C (+300°C…+400°C)
TP473P.0 1/3 DIN Thin Film	Penetration	-50°C…+300°C	±0.25°C (-50°C…+300°C)
TP474C.I	Contact	-50°C…+400°C	±0.3°C (-50°C…+300°C) ±0.5°C (+300°C…+400°C)
TP474C.0 1/3 DIN Thin Film	Contact	-50°C…+300°C	±0.3°C (-50°C…+300°C)
TP475A.0 1/3 DIN Thin Film	Air	-50°C…+250°C	±0.3°C (-50°C…+250°C)
TP472I.5	Penetration	-50°C…+400°C	±0.3°C (-50°C…+300°C) ±0.6°C (+300°C…+400°C)
TP472I.10	Penetration	-50°C…+400°C	±0.30°C (-50°C…+300°C) ±0.6°C (+300°C…+400°C)
TP49A.0 Class A Thin Film	Immersion	-70°C…+250°C	±0.3°C (-70°C…-50°C) ±0.25°C (-50°C…+250°C)
TP49AC.0 Class A Thin Film	Contact	-70°C…+250°C	±0.3°C (-70°C…-50°C) ±0.25°C (-50°C…+250°C)
TP49AP.0 Class A Thin Film	Penetration	-70°C…+250°C	±0.3°C (-70°C…-50°C) ±0.25°C (-50°C…+250°C)
TP875.I	Globe-thermometer Ø150mm	-30°C…+120°C	±0.25°C
TP876.I	Globe-thermometer Ø50mm	-30°C…+120°C	±0.25°C
TP87.0 1/3 DIN Thin Film	Immersion	-50°C…+200°C	±0.25°C
TP878.0 1/3 DIN Thin Film TP878.1.0 1/3 DIN Thin Film	Photovoltaic	+4°C…+85°C	±0.25°C
TP879.0 1/3 DIN Thin Film	Compost	-20°C…+120°C	±0.25°C

Common features

Temperature drift @20°C 0.003%/°C

4 wires Pt100 and 2 wires Pt1000 Probes

Model	Type	Application field	Accuracy
TP47.100.0 1/3 DIN Thin Film	4 wires Pt100	-50…+250°C	1/3 DIN
TP47.1000.0 1/3 DIN Thin Film	2 wires Pt1000	-50…+250°C	1/3 DIN
TP87.100.0 1/3 DIN Thin Film	4 wires Pt100	-50…+200°C	1/3 DIN
TP87.1000.0 1/3 DIN Thin Film	2 wires Pt1000	-50…+200°C	1/3 DIN

Common features

Temperature drift @20°C

Pt100	0.003%/°C
Pt1000	0.005%/°C

A To the portable data loggers of the series **HD21….2** a serial port mini USB type HID (Human Interface Device) has been inserted.
For the connection to a PC with the cable USB type A - MiniUSB type B code CP23, **it is not necessary to install any driver USB**.

B The port with the miniDin connector in all HD21...2 models, is a serial port type RS232C.
The serial port RS232C of a PC or the printer HD40.1 can be connected by the cable HD2110CSNM.

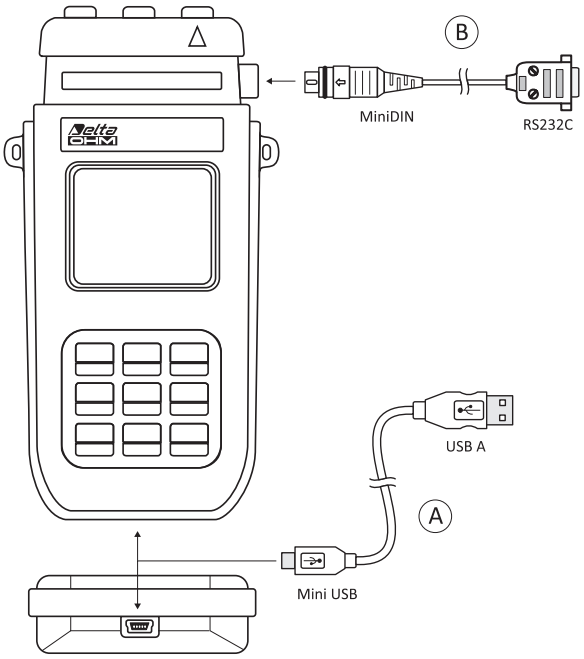

ORDERING CODES

HD2114.0: The kit consists of the HD2114.0 **with built-in 20mbar full scale probe**, 4 1.5V alkaline batteries, operating manual, case. **Other probes and PP471 module have to be ordered separately.**

HD2114.2: The kit consists of the HD2114.2 **datalogger with built-in 20mbar full scale probe**, 4 1.5V alkaline batteries, operating manual, case and DeltaLog9 software. **Other probes, PP471 module and cables have to be ordered separately.**

HD2134.0: The kit consists of the HD2134.0 **with built-in 200mbar full scale probe**, 4 1.5V alkaline batteries, operating manual, case. **Other probes and PP471 module have to be ordered separately.**

HD2134.2: The kit consists of the HD2134.2 **datalogger with built-in 200mbar full scale probe**, 4 1.5V alkaline batteries, operating manual, case and DeltaLog9 software. **Other probes, PP471 module and cables have to be ordered separately.**

HD2164.0: The kit consists of the HD2164.0 **with built-in 2000mbar full scale probe**, 4 1.5V alkaline batteries, operating manual, case. **Other probes and PP471 module have to be ordered separately.**

HD2164.2: The kit consists of the HD2164.2 **datalogger with built-in 2000mbar full scale probe**, 4 1.5V alkaline batteries, operating manual, case and DeltaLog9 software. **Other probes, PP471 module and cables have to be ordered separately.**

HD2114B.0: The kit consists of the HD2114B.0 **with 600…1100mbar range barometric sensor**, 4 1.5V alkaline batteries, operating manual, case. **Other probes and PP471 module have to be ordered separately.**

HD2114B.2: The kit consists of the HD2114B.2 **datalogger with 600…1100mbar range barometric sensor**, 4 1.5V alkaline batteries, operating manual, case and DeltaLog9 software. **Other probes, PP471 module and cables have to be ordered separately.**

HD2110CSNM: 8-pole connection cable MiniDin - Sub D 9-pole female for RS232C.

CP23: Connection cable USB 2.0 connector type A - Mini USB type B.
DeltaLog9: Software for download and manage of the data on PC by using Windows operating systems.
SWD10: Stabilized power supply at 230Vac/12Vdc-1000mA mains voltage.
HD40.1: Portable, serial input, 24 column thermal printer, 58mm paper width.

Pressure probes equipped with SICRAM module
PP471: SICRAM interface module between instrument and TP704 and TP705 series Delta Ohm probes. Cable length 2 metres. **The list of pressure probes is outlined in the PP471 module technical data table.**

Temperature probes equipped with SICRAM module
TP472I: Immersion probe, Wire Wound Pt100 sensor. Stem Ø 3 mm, length 300 mm. Cable 2 meters long.
TP472I.0: Immersion probe, Thin Film Pt100 sensor. Stem Ø 3 mm, length 230 mm. Cable 2 meters long.
TP473P.I: Penetration probe, Wire Wound Pt100 sensor. Stem Ø 4mm, length 150 mm. Cable 2 meters long.
TP473P.0: Penetration probe, Thin Film Pt100 sensor. Stem Ø 4mm, length 150 mm. Cable 2 meters long.
TP474C.I: Contact probe, Wire Wound Pt100 sensor. Stem Ø 4mm, length 230mm, contact surface Ø 5mm. Cable 2 meters long.
TP474C.0: Contact probe, Thin Film Pt100 sensor. Stem Ø 4mm, length 230mm, contact surface Ø 5mm. Cable 2 meters long.
TP475A.0: Air probe, Thin Film Pt100 sensor. Stem Ø 4mm, length 230mm. Cable 2 meters long.
TP472I.5: Penetration probe, Thin Film Pt100 sensor. Stem Ø 6mm, length 500 mm. Cable 2 meters long.
TP472I.10: Penetration probe, Thin Film Pt100 sensor. Stem Ø 6mm, length 1000mm. Cable 2 meters long.
TP49A.0: Immersion probe, Thin Film Pt100 sensor. Stem Ø 2.7mm, length 150mm. Cable 2 meters long. Aluminium handle.
TP49AC.0: Contact probe, Thin Film Pt100 sensor. Stem Ø 4 mm, length 150mm. Cable 2 meters long. Aluminium handle.
TP49AP.0: Penetration probe, Thin Film Pt100 sensor. Stem Ø 2.7mm, length 150mm. Cable 2 meters long. Aluminium handle.
TP875.I: Globe thermometer Ø 150 mm with handle. Wire Wound Pt100 sensor complete of SICRAM module. Cable 2 meters long.
TP876.I: Globe thermometer Ø 50 mm with handle. Wire Wound Pt100 sensor complete of SICRAM module. Cable 2 meters long.
TP87.0: Immersion probe, Thin Film Pt100 sensor. Stem Ø 3 mm, length 70 mm. Cable 2 meters long.
TP878.0: Contact probe for solar panels. Thin Film Pt100 sensor. Cable 2 meters long.
TP878.1.0: Contact probe for solar panels. Thin Film Pt100 sensor .Cable 5 meters long
TP879.0: Penetration probe for compost. Thin Film Pt100 sensor. Stem Ø 8 mm, length 1000mm. Cable 2 meters long.

Temperature probes without SICRAM module
TP47.100.0: Immersion probe, Thin Film Pt100 sensor probe. Stem Ø 3 mm, length 230mm. 4 wires connection cable with connector, 2 meters long.
TP47: Only connector for probe connection without SICRAM module: direct 3 and 4 wires Pt100, 2 wires Pt1000.
TP87.100.0 Immersion probe, Thin Film Pt100 sensor. Stem Ø 3 mm, length 70mm. Cable 2 meters long. 4 wires connection cable with connector 1 meter long.


HD40.1


HD2110CSNM

PRESSURE PROBE TABLE

Full scale pressure	Maximum overpressure	Resolution	ORDERING CODES			Accuracy From 20 to 25°C	Working temperature	Connection
			Differential pressure	Relative pressure (compared to atmosphere)	Absolute pressure			
			NON insulated membrane	Insulated membrane	Insulated membrane			
10.0 mbar	20.0 mbar	0.01 mbar	• TP705-10MBD			0.5 % F.S.	0..60 °C	Tube Ø 5 mm
20.0 mbar	40.0 mbar	0.01 mbar	• TP705-20MBD			0.5 % F.S.	0..60 °C	Tube Ø 5 mm
50.0 mbar	100 mbar	0.01 mbar	TP705-50MBD			0.5 % F.S.	0..60 °C	Tube Ø 5 mm
100 mbar	200 mbar	0.1 mbar	TP705-100MBD			0.25 % F.S.	0..60 °C	Tube Ø 5 mm
				TP704-100MBGI		0.25 % F.S.	-10..+80 °C	¼ BSP
200 mbar	400 mbar	0.1 mbar	TP705-200MBD			0.25 % F.S.	0..60 °C	Tube Ø 5 mm
				TP704-200MBGI		0.25 % F.S.	-10..+80 °C	¼ BSP
400 mbar	1000 mbar	0.1 mbar		TP704-400MBGI		0.25 % F.S.	-10..+80 °C	¼ BSP
500 mbar	1000 mbar	0.1 mbar	TP705-500MBD			0.25 % F.S.	0..60 °C	Tube Ø 5 mm
600 mbar	1000 mbar	0.1 mbar		TP704-600MBGI		0.25 % F.S.	-40..125 °C	¼ BSP
1.00 bar	2.00 bar	1 mbar	TP705-1BD			0.25 % F.S.	0..60 °C	Tube Ø 5 mm
					TP705BAR0	0.25 % F.S.	0..60 °C	Tube Ø 5 mm
				TP704-1BGI		0.25 % F.S.	-40..125 °C	¼ BSP
					TP704-1BA	0.25 % F.S.	-40..125 °C	¼ BSP
2.00 bar	4.00 bar	1 mbar	TP705-2BD			0.25 % F.S.	0..60 °C	Tube Ø 5 mm
				TP704-2BGI		0.25 % F.S.	-40..+125 °C	¼ BSP
					TP704-2BAI *	0.25 % F.S.	-25..+85 °C	¼ BSP
5.00 bar	10.00 bar	1 mbar		TP704-5BGI		0.25 % F.S.	-40..+125 °C	¼ BSP
					TP704-5BAI *	0.25 % F.S.	-25..+85 °C	¼ BSP
10.00 bar	20.0 bar	0.01 bar		TP704-10BGI		0.25 % F.S.	-40..+125 °C	¼ BSP
					TP704-10BAI *	0.25 % F.S.	-25..+85 °C	¼ BSP
20.0 bar	40.0 bar	0.01 bar		TP704-20BGI		0.25 % F.S.	-40..+125 °C	¼ BSP
					TP704-20BAI *	0.25 % F.S.	-25..+85 °C	¼ BSP
50.0 bar	100.0 bar	0.01 bar		TP704-50BGI		0.25 % F.S.	-40..+125 °C	¼ BSP
					TP704-50BAI *	0.25 % F.S.	-25..+85 °C	¼ BSP
100 bar	200 bar	0.1 bar		TP704-100BGI		0.25 % F.S.	-40..+125 °C	¼ BSP
					TP704-100BAI *	0.25 % F.S.	-25..+85 °C	¼ BSP
200 bar	400 bar	0.1 bar		TP704-200BGI		0.25 % F.S.	-40..+125 °C	¼ BSP
					TP704-200BAI *	0.25 % F.S.	-25..+85 °C	¼ BSP
500 bar	1000 bar	0.1 bar		TP704-500BGI		0.25 % F.S.	-40..+125 °C	¼ BSP
	700 bar	0.1 bar			TP704-500BAI *	0.25 % F.S.	-25..+85 °C	¼ BSP

* Ceramic diaphragm
• Only report of calibration, no Accredia certificate



DO 9704
PRESSURE AND TEMPERATURE DATALOGGER

The Delta Ohm **DO 9704** pressure gauge and data logger has been designed for detecting pressure, flow rate and temperature, physical values which are very important in industrial and chemical processes. The instrument has two inputs and automatically recognises the probes connected, whether they be pressure or temperature probes or turbines for measuring flow rate.
As the probes are interchangeable, it is possible to choose the most suitable combination for all applications without having to recalibrate the instrument. The operating principle of the pressure sensor is based on the deflection of a membrane in a sealed chamber in contact with the stream you want to measure the pressure. The flow may be liquid or gas. The flow rate measurement is based on the number of impulses or the frequency of a small fan. The DO 9704 is able to measure the following:

Pressure:
- differential or relative pressure from 10 mbar to 2 bar for air or non corrosive gases;
- absolute and relative pressure from 0.2 bar to 1000 bar for measurements in contact with liquids or gases.
- The measurement units are: bar, kPa, atm, mmHg, mmH_2O and PSI.
- The instrument is able to detect peaks of around 5 milliseconds.

Temperature:
interchangeable probes are available with amplified Pt100 elements of the TP 870 series; the measurement can be in °C or °F.

Flow rate:
Flow rate can be measured with a turbine in the range from 2 to 2000 litres per minute in the measurement units LPM (litres per minute) or IPGM (Imperial Gallons per Minute).

MAIN CHARACTERISTICS AND APPLICATIONS
- RECORD function with display of the peak, minimum and mean value.
- Input A-B measurement function for pseudo differential measurements, pressure drops or flow rate with calibrated flanges.
- Relative measurement function with respect to a given instant.
- Zero correction function, especially useful for low pressures.
- Stores up to 30,000 measurements with date and time of measurement and programmable interval from 1 sec. to 12 hours.
- Double display for simultaneous viewing of the two inputs.
- RS 232C serial output for a printer or for unloading data onto a PC.

Typical applications for this instrument are in the following sectors:
- Hydraulics - Fluidodynamics - Chemical plants and process controls - Compressors
- Pumping plants - Flow rate measurements - Chimney draught - Moulding and presses for plastics and thermosetting materials - Level measurements

INSTRUMENT TECHNICAL DATA

Inputs/type of measurement	2 / pressure, flow rate or temperature
Connector	DIN 45326 8-pole
No. conversions per second	2
Working temperature	-5...+50°C
Working relative humidity	0...90% R.H. no condensation
Serial output	RS 232C, 300...19200 baud (galvanically insulated)
Display	Double LCD 12.5 mm
Functions	Auto Power Off, Autorange, Hold, Record, Peak (5ms), Minimum, Mean, Relative, A-B (differential)
Memory	512kB (FLASH) corr. to 30000 measurements
Power supply	9V dc alkaline battery
Autonomy	Approx. 50 hours (continuous duty)
Weight/dimensions	320 gr. / 215x73x38 mm

INSTRUMENT ACCURACY

	Amb. T. 18 to 25°C	Amb. T. -5...18 or 25...50°C	measures
Pressure measurements	0.1% FS + 0.1% RDG	0.1% FS + 0.1% RGD + 100ppm/°C	RDG = measured value
Flow rate measurements	0.2% FS + 0.5% RDG	0.2% FS + 0.5% RDG + 100ppm/°C	
Temperature measurements	0.4°C 0.2°C 3°C	0.4°C + 0.01°C/°C 0.2°C + 0.01°C/°C 3°C + 0.01°C/°C	-200...-50°C -50...+200°C +200...+800°C

CLASSIFICATION OF PRESSURE MEASUREMENTS
Pressure measurements are always relative to a reference pressure; there are four distinguish types that allow you to immediately define the reference pressure.
- **Absolute pressure** (**A**=absolute) - Pressure with respect to absolute zero, ideal vacuum reference; the measured pressure is always higher than the reference pressure.
- **Overpressure** (**G**=gauge) - Pressure measured with respect to the atmospheric pressure, environment pressure reference; the measured pressure is always higher than the reference pressure.
- **Depression** (**V**=vacuum) - Pressure with respect to the atmospheric pressure, environment pressure reference; the measured pressure is always lower than the reference pressure.
- **Differential pressure** (**D**=differential) - Pressure measured with respect to any reference pressure; the measured pressure may be higher or lower than the reference pressure.

ORDER CODES
DO9704: Pressure gauge, thermometer, data logger. The kit consists of instrument DO9704, carrying case, 9V batteries, DeltaLog1 software and user's manual. CPA cable, 9CPRS232 cable for dowonload data, pressure probes, temperature probes, fittings and gaskets **have to be ordered separately.**

TEMPERATURE PROBES
TP 870: Immersion temperature probe, Pt100 sensor, diam. 3x230 mm measuring range -50…+400°C.
TP 870/C: Contact temperature probe, Pt100 sensor, diam. 4x230 mm, measuring range -50…+400°C.
TP 870/P: Penetration temperature probe, Pt100 sensor, diam. 4x150 mm, range -50…+400°C.
TP 870/A: Air temperature probe, Pt100 sensor, diam. 4x230 mm, measuring range -50…+250°C.

PRESSURE PROBES
Pressure probes: sensor surface in contact with fluid under pressure alumina or AISI316 steel. Body in steel AISI 304, O-Ring in VITON, male thread 1/4" BSP, 8-pin DIN 45326 connector.

The codes and pressure probes list are shown in table below.

ACCESSORIES
9CPRS232: Sub D 9-pole extension cable female/female for RS232 (null modem).
CPA: Connection cable L=1,5m, to connect the pressure probes to the instruments.
DeltaLog-1: DeltaLog1 software for PC data download and PC data manager.
KIT 2104: Set of ¼ BSP fittings and gaskets for TP704 series of probes.
C.205: Serial connection cable with USB connector for PC and Sub-D 9-pole connector for the instrument. The cable has a built-in USB/RS232 converter and connects the instrument DO 9704 directly to the USB port of the PC.

TEMPERATURE PROBES OF THE SERIES TP870				
Code	Description	Drawing	τ Sec.	Temp/°C
TP 870.0	Immersion probe ø 3 x 230 mm		3"A	-50/+250
TP 870P.0	Penetration probe ø 4 x 150 mm	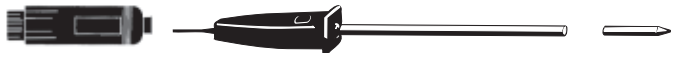	3"A	-50/+250
TP 870C.0	Contact probe ø 4 x 230 mm		12"C	-50/+250
TP 870A.0	Air probe ø 4 x 230 mm		3"B	-50/+250

A) Time constant in water at 100 ° C / **B)** Time constant detected in contact with metal surface at 200 ° C / **C)** Time constant in air at 100 ° C.
Notes: Time constant to respond to the 63% of the temperature variation.

PRESSURE PROBE TABLE

Full scale pressure	Maximum overpressure	Resolution	ORDERING CODES			Accuracy From 20 to 25°C	Working temperature	Connection
			Differential pressure	Relative pressure (compared to atmosphere)	Absolute pressure			
			NON insulated membrane	Insulated membrane	Insulated membrane			
10.0 mbar	20.0 mbar	0.01 mbar	• **TP705-10MBD**			0.5 % F.S.	0..60 °C	Tube Ø 5 mm
20.0 mbar	40.0 mbar	0.01 mbar	• **TP705-20MBD**			0.5 % F.S.	0..60 °C	Tube Ø 5 mm
50.0 mbar	100 mbar	0.01 mbar	**TP705-50MBD**			0.5 % F.S.	0..60 °C	Tube Ø 5 mm
100 mbar	200 mbar	0.1 mbar	**TP705-100MBD**			0.25 % F.S.	0..60 °C	Tube Ø 5 mm
				TP704-100MBGI		0.25 % F.S.	-10..+80 °C	¼ BSP
200 mbar	400 mbar	0.1 mbar	**TP705-200MBD**			0.25 % F.S.	0..60 °C	Tube Ø 5 mm
				TP704-200MBGI		0.25 % F.S.	-10..+80 °C	¼ BSP
400 mbar	1000 mbar	0.1 mbar		**TP704-400MBGI**		0.25 % F.S.	-10..+80 °C	¼ BSP
500 mbar	1000 mbar	0.1 mbar	**TP705-500MBD**			0.25 % F.S.	0..60 °C	Tube Ø 5 mm
600 mbar	1000 mbar	0.1 mbar		**TP704-600MBGI**		0.25 % F.S.	-40..125 °C	¼ BSP
1.00 bar	2.00 bar	1 mbar	**TP705-1BD**			0.25 % F.S.	0..60 °C	Tube Ø 5 mm
					TP705BAR0	0.25 % F.S.	0..60 °C	Tube Ø 5 mm
				TP704-1BGI		0.25 % F.S.	-40..125 °C	¼ BSP
					TP704-1BA	0.25 % F.S.	-40..125 °C	¼ BSP
2.00 bar	4.00 bar	1 mbar	**TP705-2BD**			0.25 % F.S.	0..60 °C	Tube Ø 5 mm
				TP704-2BGI		0.25 % F.S.	-40..+125 °C	¼ BSP
					TP704-2BAI *	0.25 % F.S.	-25..+85 °C	¼ BSP
5.00 bar	10.00 bar	1 mbar		**TP704-5BGI**		0.25 % F.S.	-40..+125 °C	¼ BSP
					TP704-5BAI *	0.25 % F.S.	-25..+85 °C	¼ BSP
10.00 bar	20.0 bar	0.01 bar		**TP704-10BGI**		0.25 % F.S.	-40..+125 °C	¼ BSP
					TP704-10BAI *	0.25 % F.S.	-25..+85 °C	¼ BSP
20.0 bar	40.0 bar	0.01 bar		**TP704-20BGI**		0.25 % F.S.	-40..+125 °C	¼ BSP
					TP704-20BAI *	0.25 % F.S.	-25..+85 °C	¼ BSP
50.0 bar	100.0 bar	0.01 bar		**TP704-50BGI**		0.25 % F.S.	-40..+125 °C	¼ BSP
					TP704-50BAI *	0.25 % F.S.	-25..+85 °C	¼ BSP
100 bar	200 bar	0.1 bar		**TP704-100BGI**		0.25 % F.S.	-40..+125 °C	¼ BSP
					TP704-100BAI *	0.25 % F.S.	-25..+85 °C	¼ BSP
200 bar	400 bar	0.1 bar		**TP704-200BGI**		0.25 % F.S.	-40..+125 °C	¼ BSP
					TP704-200BAI *	0.25 % F.S.	-25..+85 °C	¼ BSP
500 bar	1000 bar	0.1 bar		**TP704-500BGI**		0.25 % F.S.	-40..+125 °C	¼ BSP
	700 bar	0.1 bar			**TP704-500BAI ***	0.25 % F.S.	-25..+85 °C	¼ BSP

* Ceramic diaphragm
• Only report of calibration, no Accredia certificate









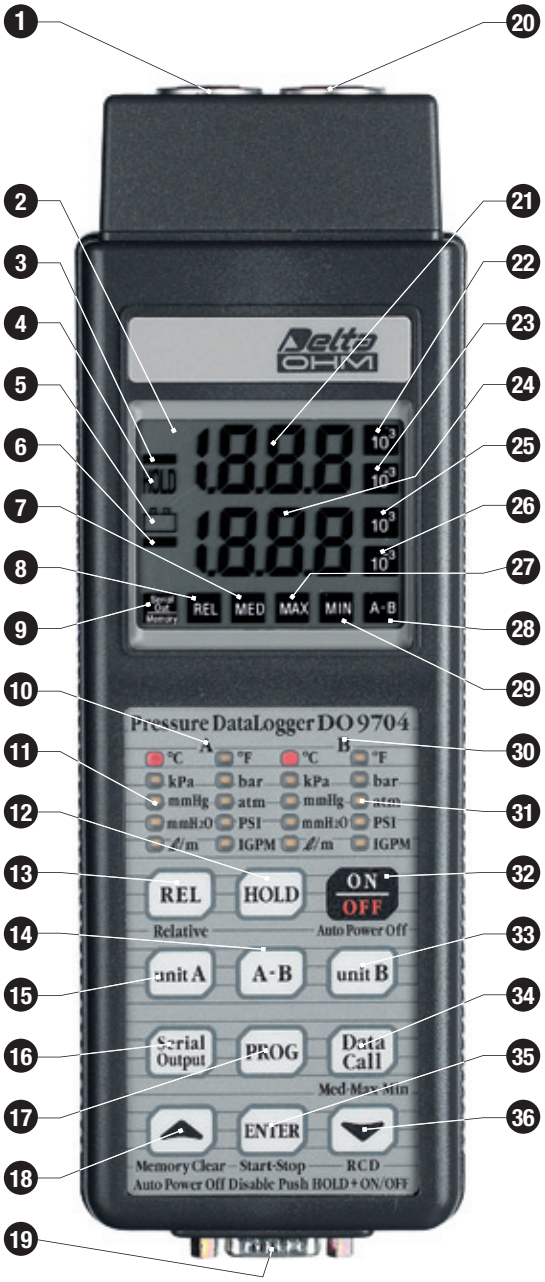

1 Input A, DIN 8-pole connector for pressure, flow rate or temperature.
2 Display.
3 Negative symbol input A.
4 HOLD symbol.
5 BATT symbol, flashes during RECORD function, permanently lit if the battery is running low.
6 Negative symbol input B.
7 The display shows the mean values.
8 REL symbol, indicates that the instrument is making a relative measurement.
9 Memory / Serial Out. Fixed symbol: the instrument is storing. Flashing symbol: serial output is enabled.
10 Measurement units that may be selected at input A.
11 Measurement unit selected at input A.
12 HOLD key for blocking the reading.
13 REL key, the value shown is relative with respect to the moment in which the REL key was pressed.
14 A-B key. The instrument displays the difference between the inputs.
15 Unit A. Key for selecting the measurement unit for input A.
16 Serial Out: enables unloading of data at the RS 232C serial output.
17 Prog: this key is pressed to enter the routine for programming the various functions of the instrument.
18 ▲ key. When enabled, this key increases the displayed parameter.
19 Output for RS 232C (SUB D male 9-pole).
20 Input B, DIN 8-pole connector for pressure, flow rate or temperature.
21 Input A indication.
22 Multiplication factor for channel A 10^{3}.
23 Multiplication factor for channel A 10^{-3}.
24 Input B indication.
25 Multiplication factor for channel B 10^{3}.
26 Multiplication factor for channel B 10^{-3}.
27 The display shows the Maximum values.
28 The display shows the difference in value between inputs A or B.
29 The display shows the Minimum values.
30 Measurement units that may be selected at input B.
31 Measurement unit selected at input B.
32 Key for switching the instrument on and off.
33 Unit B. Key for selecting the measurement unit for input B.
34 When pressed in sequence, the display indicates the Maximum peak value, the Minimum value and the Mean value.
35 The key has various functions: it starts and stops storage, confirms the set parameters.
36 ▼ key. When enabled, this key decreases the displayed values, starts and stops the RECORD function.

PRESSURE REFERENCES

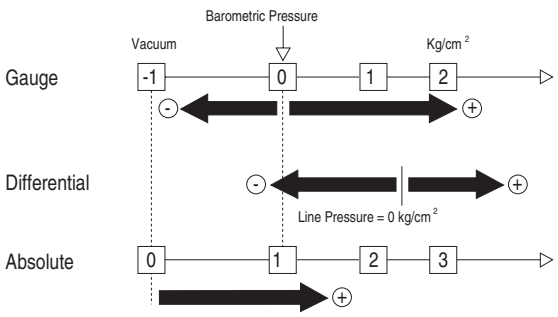



HD3604T…
HD36V4T…



HD3604T…, HD36V4T…
RELATIVE PRESSURE TRANSMITTERS

HD3604T... and HD36V4T... are pressure transmitters with microprocessor and current (4...20mA) or voltage (0...5V, 1...5V or 0...10V) output, respectively. The sensor, piezoresistive, is insulated and allows gas and liquid pressure measurement over a wide range of temperatures.
The measured pressure is relative to atmosphere. The different models cover the scales from 100mbar to 600bar.
The case is in stainless steel 20mm diam. and encloses sensor and electronics: in order to connect it to a pressurized system, it is supplied with a ¼" BSP threaded connection with a 22mm hex fastening ring.
For electrical connections a male connector DIN 43650A is used.
The connector is fitted with a three or four pole free female socket with fairlead (according to the models).

All transmitters are factory calibrated at three points. The use of a microprocessor circuit allows memorizing the sensor response curve and correcting any possible non linearity.
No calibration is requested to the user. The pressure transmitters HD3604T... and HD36V4T... can be connected to the single input configurable controller HD9022, to the dual input DO9404 or to the led display HD 2601V.1.

Technical characteristics		Notes
Output signal	4 …20mA	HD3604TxBG models
	0 …5V	HD36V4TxBG**1** models
	1 …5V	HD36V4TxBG**2** models
	0 …10V	HD36V4TxBG**3** models
Full scale pressure	100, 200, 400, 600 mbar 1, 2.5 bar 4, 6, 10, 16, 25, 40, 60, 100, 160, 250, 400 and 600 bar relative	
Overpressure limit	Twice the nominal full scale value	
Sensor	Piezoresistive	
Surface in contact with fluid	Steel 17-4PH	
Fluid in contact with membrane	Gas or liquid	
Operating temperature	-40 … +125°C	-20 … +80°C for 100 and 200 mbar f.s.
Power supply voltage	10…30Vdc	
	15…30Vdc	HD36V4TxBG**3** models with 0…10Vdc output
Absorption	< 4mA	In the models with voltage output
Accuracy	≤ ±0.25%F.S.	
Temperature effects	±1% span ±1% offset	For a variation of 100°C
Mechanical stability	< 0.1%F.S.	After 10^6 cycles 0...f.s.
Response time	5ms	
Connection to the system under pressure	¼"BSP male	
Electric connection	Male connector 3 or 4 poles DIN 43650A + female connector DIN 46350A	
Dimensions	Ø 20mm	Ø 30mm in the models up to 2.5 bar
	L=100mm	Case included. L=105mm in the models 400 and 600 mbar, 1 bar
Case material	Stainless steel AISI 304	
Weight	100gr	220g in the models 400 and 600 mbar, 1 bar
Load resistance	R_{Lmax} = 636Ω a 24Vdc $R_{Lmax} = \frac{(Vdc - 10)}{22mA}$	For the models with current output 4...20mA HD3604T…
	$R_L \geq$ 10kΩ	For the models with voltage output HD36V4T …
Protection degree	IP65	With connector correctly engaged.

Installation and connections

The HD3604T… and HD36V4T… transmitters can be installed in any position.
Make the electrical connection to the free female connector as indicated in the diagrams of the following table.

Transmitter model	Connection diagram of the transmitter pin (front view)	Notes
HD3604TxBG	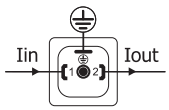	If the connection cable is shielded, connect the shield to pin ⏚
HD36V4TxBG…	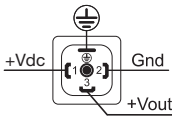	Use a shielded connection cable and connect the shield to the pin ⏚

In the models with a 4...20mA current output, use the following connections:	In the models with a voltage output, use the following connection:
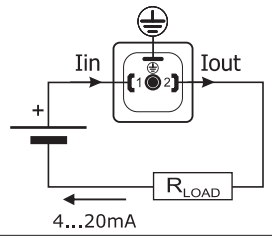	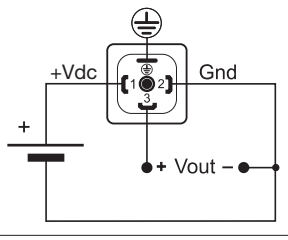
HD3604TxBG	**HD36V4TxBG...**

DIN 43650A connector

To make the electrical connections you need to open the female connector.

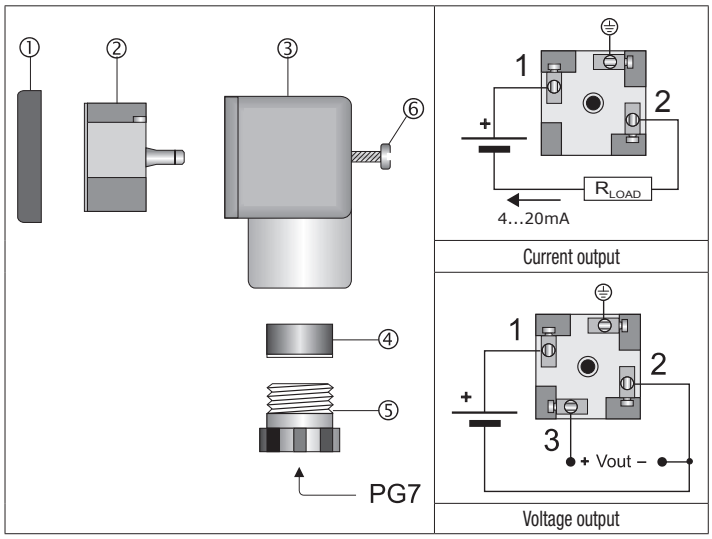

Remove the gasket ①. Unscrew the fairlead ⑤ and take off the gasket ④. Use a screwdriver to pry and take off the connecting terminal ②. Make the connections as shown in the figure: if present, the shielded cable braid must be connected to the earth terminal. Once the connections are made, close the connector.

Transmitter calibration

The transmitters are calibrated at three points; no calibration is requested to the user.

Warnings

The pressure transmitter has a male threaded ¼" BSP. During installation, take special care to the pressure resistance of the junction. Use any appropriate seals.

Great attention must be placed in the installation of transmitters in the pressure vessel or piping. Attention must be paid to the choice of full scale flow rate for an error, in addition to permanently damage the transmitter, can cause personal injuries and property also severe. Always insert, before the first transmitter, a key stop and make sure that the plant will not occur abnormal and unexpected peaks or surges of fluid under pressure.

Mechanical Dimensions

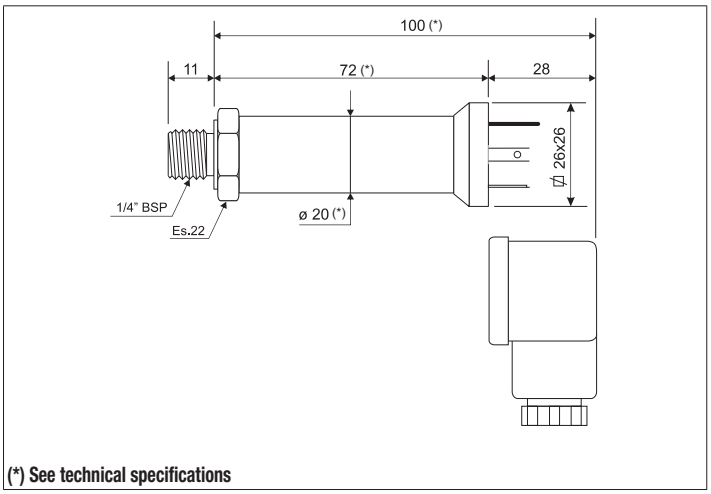

(*) See technical specifications

Examples of connections with the HD9022 and DO9404 indicators/regulators

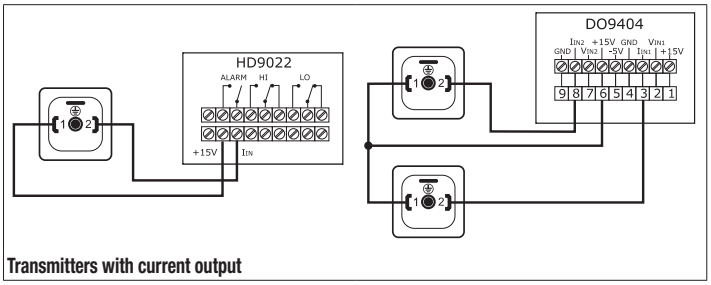

Transmitters with current output

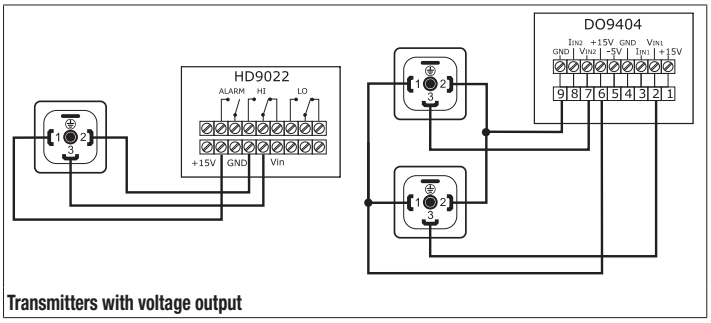

Transmitters with voltage output

Order codes:

HD36 X 4T X BG X

No symbol = 4...20mA current analog output
1 = Voltage analog output 0...5Vdc
2 = Voltage analog output 1...5Vdc
3 = Voltage analog output 0...10Vdc

MB = mbar
B = Bar
G = Gauge (relative pressure)

Nominal full scale (bar)
100 - 200 - 400 - 600 mbar - 1 - 2,5 relative bar
4 - 6 - 10 - 16 - 25 - 40 - 60 - 100 - 160 - 200 - 250
400 - 600 - relative bar

0 = Analog output 4…20mA
V = Voltage analog output

HD 2004T…
HD 20V4T…



HD 2004T…, HD 20V4T…
PASSIVE PRESSURE TRANSMITTERS WITH DIN 43650 CONNECTOR

HD 2004T and **HD 20V4T** are microprocessor pressure transmitters, with current output (4÷20 mA) the first and voltage output (0÷5V, 1÷5V or 0÷10V) the second.
The sensitive element consists of a jumper of piezoresistive resistors deposited on a ceramic membrane. At the variation of pressure, the bending of this membrane causes a linear and proportional variation of the bridge resistances.
The stainless steel case (30 mm diam.) includes both the sensor and the electronics. For the connection to the pressure there will be a part threaded ¼ "BSP and a tax on container for a key 27 mm. For the electrical connection is present on the side, a male connector pin Faston three or four (depending on model) with the corresponding female socket and PG7 cable gland to DIN 43650.

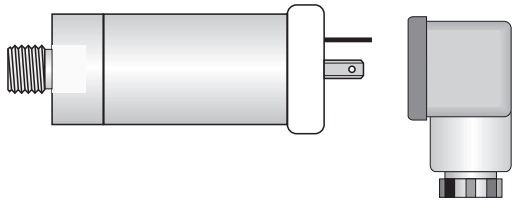

Fig.1 HD 2004T transmitter with DIN 43650 connector.

Technical Specifications

Output Signal	Current	4...20 mA (HD 2004T...)
	Voltage	0...5V (HD 20V4T... 1), 1...5V (HD 20V4T... 2), 0...10V (HD 20V4T... 3)
Full scale pressure		200, 400, 600 relative mbar 1, 2.5, 4, 6, 10, 16, 25, 40, 60, 100, 160, 250, 400 and 600 absolute bar 1, 2.5, 4, 6, 10, 16, 25, 40, 60 relative bar
Overpressure limit	Up to 250 bar	Twice the rated value
	400 bar	750 bar
	600 bar	750 bar
Sensor		Piezoresistive
Material in contact with the measuring fluid		Alumina, stainless steel for models up to 1bar.
Fluid in contact with the diaphragm		Gas or liquids
Operating temperature		-30...+80°C
Power supply voltage		10...30Vdc (15...30Vdc for models having 0...10Vdc output)
Accuracy (linearity, hysteresis and repeatability)		≤ ±0.25%F.S.
Gain sensitivity to temperature changes (@ 25°C)		≤ ±0.008%F.S. between 0 and 70°C ≤ ±0.012%F.S. between -30°C and 0°C and between 70°C and 80°C
Zero sensitivity to temperature changes (@ 25°C)		≤ ±0.04%F.S.
Connection to plant under pressure		¼"BSP male
Electrical connection		3/4 -pole faston male connector + DIN 43650A female connector (outlet)
Housing		AISI 304 stainless steel
Size		Ø 30x100 mm (included DIN 43650 connector)
Weight		190 g
Load resistance for HD 2004T models... (see Fig.2)		R_{Lmax} = 636 Ω a 24 Vdc $R_{Lmax} = \frac{(Vdc - 10)}{22mA}$
Load resistance for HD 20V4T models...		$R_L \geq 10k\Omega$
Response time		5 ms (Time required to achieve the 63% of the final variation)
Protection class		IP54

Installation and connections
HD 2004T... and HD 20V4T... transmitters can be installed in any position. Open the female connector to make the electrical connections (see fig.3).

Transmitter Calibration
The transmitter output is factory-calibrated, thus no user's operation is generally requested. Current output transmitters supply 4 mA on the start of scale and 20 mA at full scale;
0...5V, 1...5V and 0...10V voltage output transmitters generate 0V or 1V at start of scale pressure and 5V or 10V at full scale pressure.

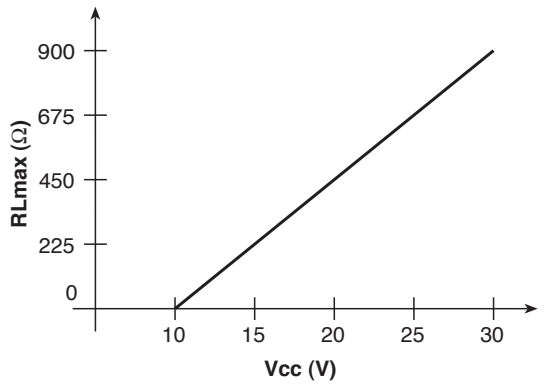

Fig.2 4...20 mA output load resistance according to the power supply voltage.

HD 2004T... and HD 20V4T... series pressure transmitters can be connected to Delta Ohm HD 9022 single input configurable indicators / regulators, to DO 9404 double input ones or led indicator HD2601V.1.

Warnings

The pressure transmitter has a male threaded ¼" BSP. During installation, take special care to the pressure resistance of the junction. Use any appropriate seals.

Great attention must be placed in the installation of transmitters in the pressure vessel or piping. Attention must be paid to the choice of full scale flow rate for an error, in addition to permanently damage the transmitter, can cause personal injuries and property also severe. Always insert, before the first transmitter, a key stop and make sure that the plant will not occur abnormal and unexpected peaks or surges of fluid under pressure.

ORDER CODES

HD 20[0]4T - [1][B][G][1]

Output:
1 = 0...5V
2 = 1...5V
3 = 0...10V
none = 4...20 mA

A = Absolute pressure
G = Relative pressure

B = bar
MB = mbar

Nominal full scale (bar)
100-200-400-600 relative mbar
1-2.5-4-6-10-16-25-40-60 relative or absolute bar
100-160-250-400-600 absolute bar

Type of output
0 = Current
V = Voltage

FULL SCALE	RELATIVE Ref.: atmospheric pressure	ABSOLUTE Ref.: vacuum	ABSOLUTE Ref.: 1 bar s.g.
100 mbar	HD 20…4T-100MBG		
200 mbar	HD 20…4T-200MBG		
400 mbar	HD 20…4T-400MBG		
600 mbar	HD 20…4T-600MBG		
1 bar	HD 20...4T- 1 BG...	HD 20...4T- 1 BA...	
2.5 bar	HD 20...4T- 2 B5G...	HD 20...4T- 2 B5A...	
4 bar	HD 20...4T- 4 BG...	HD 20...4T- 4 BA...	
6 bar	HD 20...4T- 6 BG...	HD 20...4T- 6 BA...	
10 bar	HD 20...4T- 10 BG...	HD 20...4T- 10 BA...	
16 bar	HD 20...4T- 16 BG...	HD 20...4T- 16 BA...	
25 bar	HD 20...4T- 25 BG...	HD 20...4T- 25 BA...	
40 bar	HD 20...4T- 40 BG...	HD 20...4T- 40 BA...	
60 bar	HD 20...4T- 60 BG...	HD 20...4T- 60 BA...	
100 bar			HD 20...4T- 100 BA...
160 bar			HD 20...4T- 160 BA...
250 bar			HD 20...4T- 250 BA...
400 bar			HD 20...4T- 400 BA...
600 bar			HD 20...4T- 600 BA...

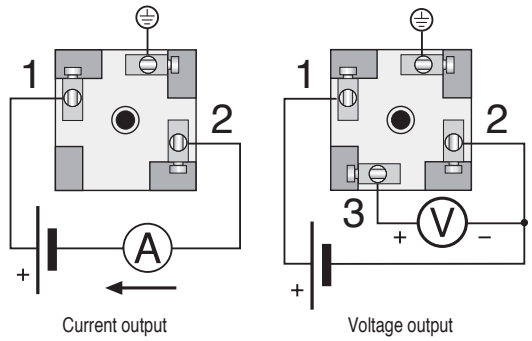

Fig.5

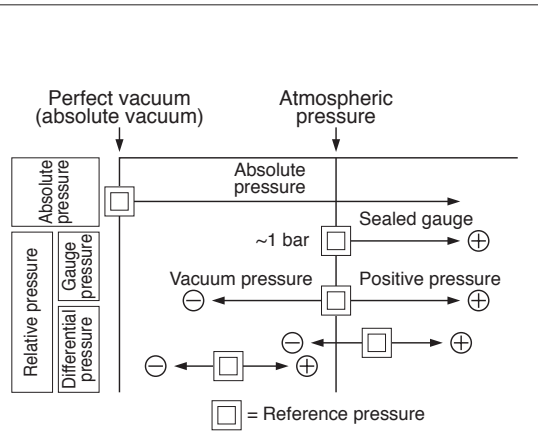

Types of pressure

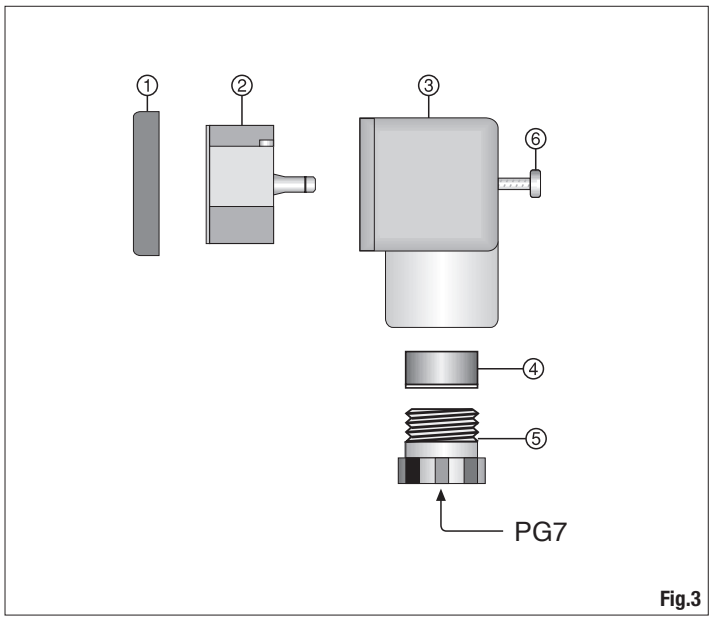

Fig.3

Remove the gasket **1**. Unscrew the cable gland **5** and take the gasket **4** away. Using a screwdriver, lever and remove the terminal carrier **2**. Follow the indications shown on figure 4 to make the connections: the ground terminal has to be connected with the braid of the screened cable. After carrying out the connections, close again the connector. Mount the HD 2004T... or the HD 20V4T... : the transmitters have a 1/4" BSP male threaded connection. By mounting, take care that the fitting is properly pressure-sealed and, if necessary, use adequate seals. Apply the connector to the transmitter and fix it with the provided **6** screw.

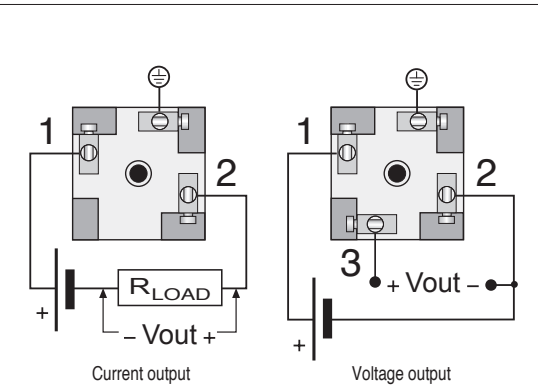

Fig.4 DIN 43650 connector: electrical connections.

HD 408T
HD 4V8T



HD 408T..., HD 4V8T...
RELATIVE OR DIFFERENTIAL ATMOSPHERIC PRESSURE TRANSMITTERS

The HD408T, HD4V8T are analog output relative or differential atmospheric pressure transmitters; they are used in all those applications where non corrosive air or gas need to be monitored, with pressure fields from 10 mbar to 2000 mbar. The piezoresistive sensor gives extremely precise and stable measurements of the applied differential pressure, with excellent repeatability, low hysteresis, and very good temperature stability.
The output signal of the sensor is conditioned to provide either a current output (model HD408T) or a voltage output (model HD4V8T) linearly proportional to the applied differential pressure.
The transmitters are ready to use as they have been calibrated at the factory. They are used to monitor clean room barometric pressure, to control filters, to measure flows (employment with the Pitot tube), for packing and packaging machines, and to control ventilation.

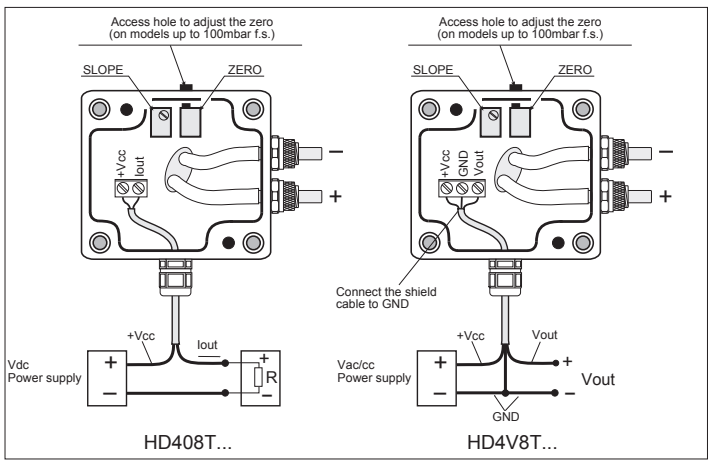

TECHNICAL INFORMATION @ 20°C AND 24Vdc

	HD408T	HD4V8T
Sensor	Piezoresistive	
Measurement range	10, 20, 50, 100, 200, 500, 1000, 2000 mbar ±10, ±20, ±50, ±100, ±200, ±500, ±1000, ±2000 mbar	
Output signal	4 … 20 mA	0 … 10 Vdc standard; 0 … 5 Vdc, 1 … 5 Vdc on request
Precision	±0.5 % F.S. @ 20°C	
Resolution	Infinite	
Temperature effects	< 1% F.S., zero; <1% F.S., span from –20°C to +60°C (from -4° to 140°F)	
Time stability	< 1 % F.S. over 6 months at 20°C	
Startup time	1 sec. at 99% of full scale reading	
Response time	< 10 ms until it reaches the stated precision by applying a step pressure level	
Power	8 … 30 Vdc	16 … 40 Vdc or 24 Vac with output 0 … 10 Vdc 10 … 40 Vdc or 24 Vac with outputs 0 … 5 Vdc, 1 … 5 Vdc
Absorption	< 4 mA	20 mA @ 20°C, 24 Vdc
Load resistance	R_{Lmax} = 727 Ω a 24Vcc $R_{Lmax} = \frac{Vdc-8}{22\ mA}$	Minimum input resistance 10kΩ
Operating temperature	-20 ... +60°C	
Storage temperature	-20 ... +80°C	
Compatible elements	**air and dry gases only**	
Overpressure limit	350mbar for the models 10, 20, 50, 100 mbar 3X F.S. for all the other models	
Pressure connection	With Ø 5mm flexible tube	
Electric connection	Screw terminal box	
Case	MACROLON	
Case size	64x58x34	
Protection degree	IP67	

INSTALLATION

In all models the sensor and electronic parts are housed in a robust case in MACROLON with IP67 degree of protection. Opening the cover, the holes that allow to secure the transmitter's base directly to a panel or a wall, become available. HD408T, HD4V8T can be mounted in any position, the deviation of the zero due to the mounting position is in the worst case (10 mbar range) less than 1% F.S. and can be corrected with an appropriate regulating potentiometer, that can be accessed from outside, for pressures up to 100mbar.

MECHANICAL DIMENSIONS

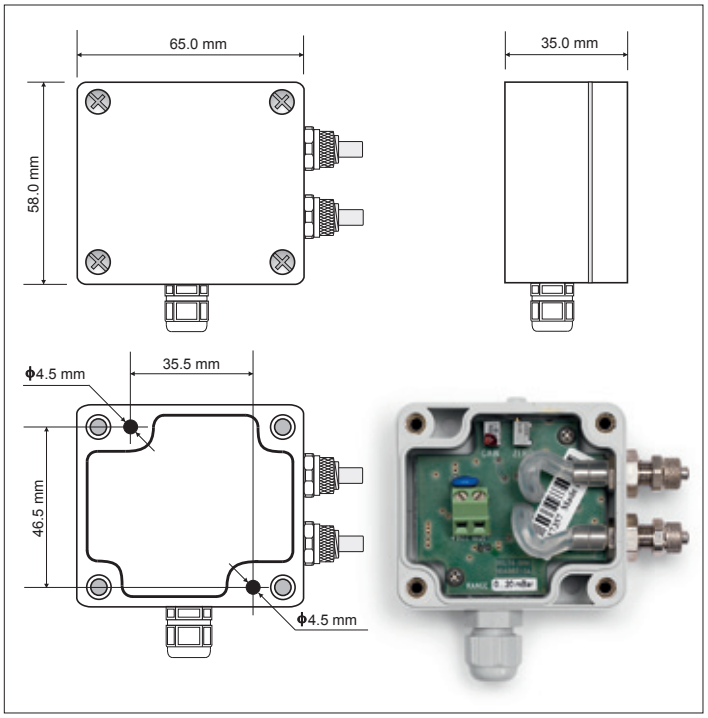

ORDERING CODES

H D 4 0 8 T - 1 [ ] G [ ]

Output:
1 = 0...5Vdc
2 = 1...5Vdc
3 = 0...10Vdc
not indicated = 4…20mA

D = Differential pressure -f.s … +f.s
with regard to the atmosphere
G = Relative pressure 0… +f.s
with regard to the atmosphere

B = bar
MB = mbar

Nominal full scale
10 - 20 - 50 - 100 - 200 - 500 mbar (MB)
1 - 2bar (B)

Output Type: **0** = Current
V = Voltage

	RANGE	OUTPUT 4…20mA	OUTPUT 0…10Vdc	OUTPUT 0…5Vdc	OUTPUT 1…5Vdc
RELATIVE	0...10mbar	HD408T-10MBG	HD4V8T-10MBG3	HD4V8T-10MBG1	HD4V8T-10MBG2
	0...20mbar	HD408T-20MBG	HD4V8T-20MBG3	HD4V8T-20MBG1	HD4V8T-20MBG2
	0...50mbar	HD408T-50MBG	HD4V8T-50MBG3	HD4V8T-50MBG1	HD4V8T-50MBG2
	0...100mbar	HD408T-100MBG	HD4V8T-100MBG3	HD4V8T-100MBG1	HD4V8T-100MBG2
	0...200mbar	HD408T-200MBG	HD4V8T-200MBG3	HD4V8T-200MBG1	HD4V8T-200MBG2
	0...500mbar	HD408T-500MBG	HD4V8T-500MBG3	HD4V8T-500MBG1	HD4V8T-500MBG2
	0...1000mbar	HD408T-1BG	HD4V8T-1BG3	HD4V8T-1BG1	HD4V8T-1BG2
	0…2000mbar	HD408T-2BG	HD4V8T-2BG3	HD4V8T-2BG1	HD4V8T-2BG2
DIFFERENTIAL	-10...10mbar	HD408T-10MBD	HD4V8T-10MBD3	HD4V8T-10MBD1	HD4V8T-10MBD2
	-20...20mbar	HD408T-20MBD	HD4V8T-20MBD3	HD4V8T-20MBD1	HD4V8T-20MBD2
	-50...50mbar	HD408T-50MBD	HD4V8T-50MBD3	HD4V8T-50MBD1	HD4V8T-50MBD2
	-100...100mbar	HD408T-100MBD	HD4V8T-100MBD3	HD4V8T-100MBD1	HD4V8T-100MBD2
	-200...200mbar	HD408T-200MBD	HD4V8T-200MBD3	HD4V8T-200MBD1	HD4V8T-200MBD2
	-500...500mbar	HD408T-500MBD	HD4V8T-500MBD3	HD4V8T-500MBD1	HD4V8T-500MBD2
	-1000...1000mbar	HD408T-1BD	HD4V8T-1BD3	HD4V8T-1BD1	HD4V8T-1BD2
	-2000...2000mbar	HD408T-2BD	HD4V8T-2BD3	HD4V8T-2BD1	HD4V8T-2BD2

Examples of connections with the HD9022 and DO9404 indicators/regulators

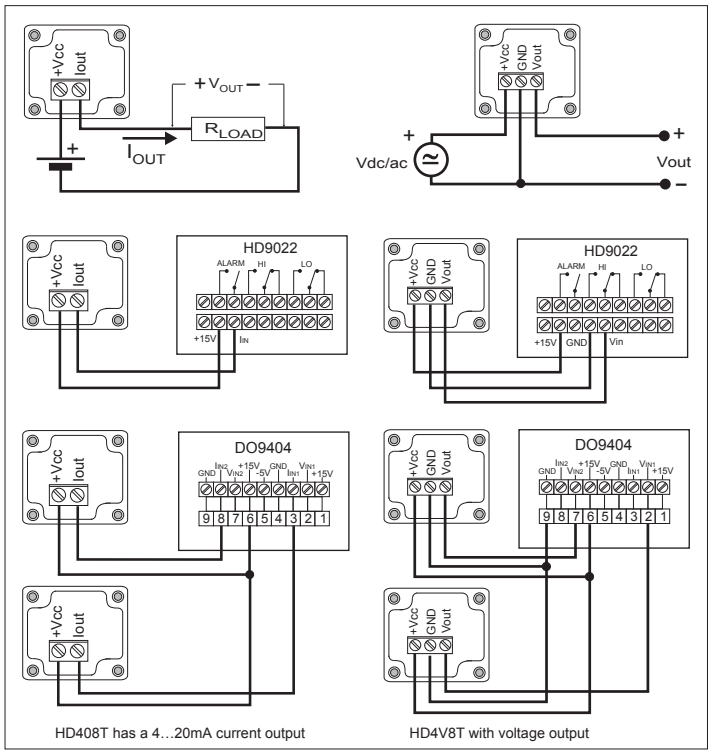

HD 4V8T Baro



HD 4V8T Baro
BAROMETRIC TRANSMITTER

Barometric transmitter to wall mount for indoor use, with 0…1 Vdc analog output. Measuring range 600…1100mbar. Power supply 10…40 Vdc. Working temperature -30°C… 60°C. Suitable for installation in the housings for weather stations HD32.35, HD32.35FP, HD32.36 and HD32.36FP.

Technical specifications

Type of sensor	Piezoresistive
Measuring range	600÷1100 mbar
Analog output	0÷1Vdc
Accuracy	±0.5 mbar, @ 20°C
Resolution	Infinite
Temperature drift	<1% F.S., zero; <1% F.S., span from -20°C to +60°C (-4°F to 140°F)
Long term stability	<0.25% F.S. at 6 months at 20°C
Settling Time	1 sec. Al 99% of the measure
Response time	<200ms after pressure stabilization
Power Supply	10÷40 Vdc
Current Supply	< 4 mA
Working temperature	-30 ... +60°C
Compatibility	Dry air and gases, non-corrosive
Overpressure	2 bar – 30 psi
Dimensions	65mm x 58mm x 35mm



HD 402T



HD402T
PRESSURE TRANSMITTERS

- Sensor with high accuracy and stability
- Measurement of pressures relative to the atmosphere or differential pressures
- Dual analogue output: current and voltage
- Versions with or without LCD display

Applications
- Control of air conditioning and ventilation
- Control of filters
- Monitoring of clean rooms
- Pneumatic controls
- Respirators
- Vaporizers



Description
The series of transmitters HD402T... is suitable for measuring relative pressure with respect to atmosphere or differential pressure in the range from 50 Pa to 200 kPa.
These transmitters use a silicon piezoresistive sensor with high accuracy and temperature compensation, which has excellent linearity, repeatability and stability over the time.
The output signal of the sensor is converted into a standard analog output to be chosen between voltage 0...10 V or current 0...20 mA or 4...20 mA. The current output signal can be transmitted over long distances with high immunity to interference (the maximum distance depends on the load and the section of the connection cables, but distances of several hundred meters are commonly reached).
The tool offers a wide range of configurations. Besides the full scale (f.s.), different measuring units can be chosen for each instrument, and it is also possible to set the unipolar (0 ... +f.s.) or bipolar (-f.s. ... +f.s.) measuring range.
The configuration can be made through a series of dip switches mounted on the circuit board or by connecting the serial port of the transmitter to the PC.
Thanks to the particular sensor used, the transmitters are insensitive to orientation and position. Moreover, the high stability of the sensor over the time and in comparison to the changes in temperature allows to eliminate the operations of maintenance typically required to compensate for the aging and the deviation of the sensor zero.
The option “display” (L) is available, in this case the values of pressure are displayed on a 4-digit display under the unit of measure set by the user.
The transmitters are supplied ready for use and factory calibrated in 3 points.
As an alternative to the configuration of the transmitter by means of the dip switches, a serial output is available for the configuration via PC.
Power supply with 24Vac alternating voltage or 16...40 Vdc direct voltage.

Technical specifications

Sensor	Piezoresistive, High stability
Measuring range	from 0…50 Pa to 0…200 kPa both relative and differential (please refer to table 1)
Resolution	Please refer to table 2
Accuracy @ 25 °C	± 1.5% f.s. nominal for HD402T1 ± 0.75% f.s. nominal for HD402T2 ± 1% f.s. nominal for HD402T3, HD402T4 and HD402T5
Accuracy @ 0…50 °C	± 3% f.s. nominal for HD402T1 ± 1% f.s. nominal for HD402T2, HD402T3, HD402T4 and HD402T5
Long term stability (1000 h) @ 25 °C	± 0.5% f.s. nominal for HD402T1 and HD402T2 ± 0.35% f.s. nominal for HD402T3 ± 0.25% f.s. nominal for HD402T4 and HD402T5
Output signal	0…10 Vdc R_L > 10 kΩ and 0…20 or 4…20 mA R_L < 500 Ω
Response time	0.25 seconds for the analog outputs 0.5 seconds for the display updating
Overpressure limit	50 kPa for the models with f.s. up to 10 kPa 200 kPa for the model with f.s. 100 kPa 400 kPa for the model with f.s. 200 kPa
Compatible media	Only air and non-aggressive dry gases
Power supply	24 Vac ± 10% or 16…40 Vdc
Absorption	< 1 W @ 24 Vdc
Pressure connection	Ø 5 mm hose
Electrical connections	Screw terminal block, max 1.5 mm^2, PG9 fairlead for the input cable
Operating conditions	-10...+60 °C / 0…95% RH
Storage temperature	-20...+70 °C
Housing dimensions	80 x 84 x 44 mm
Protection degree	IP67

TAB. 1: full scale values and units of measurement

Model	Pa	kPa	mbar	mmH_2O	$inchH_2O$	mmHg	PSI
HD402T1	50/100/250	---	0,5/1/2,5	5/10/25	0,2/0,4/1	---	---
HD402T2	250/500/1000	---	2,5/5/10	25/50/100	1/2/4	---	---
HD402T3	---	2,5/5/10	25/50/100	---	---	10/25/50	0,4/0,75/1,5
HD402T4	---	25/50/100	250/500/1000	---	---	100/250/500	4/7,5/15
HD402T5	---	50/100/200	500/1000/2000	---	---	250/500/1000	10/15/30

TAB. 2: resolution

Modello	Pa	kPa	mbar	mmH_2O	$inchH_2O$	mmHg	PSI
HD402T1	0.1	---	0.001	0.01	0.001	---	---
HD402T2	1	---	0.01	0.1	0.01	---	---
HD402T3	---	0.01	0.1	---	---	0.01	0.001
HD402T4	---	0.1	1	---	---	0.1	0.01
HD402T5	---	0.1	1	---	---	1	0.01

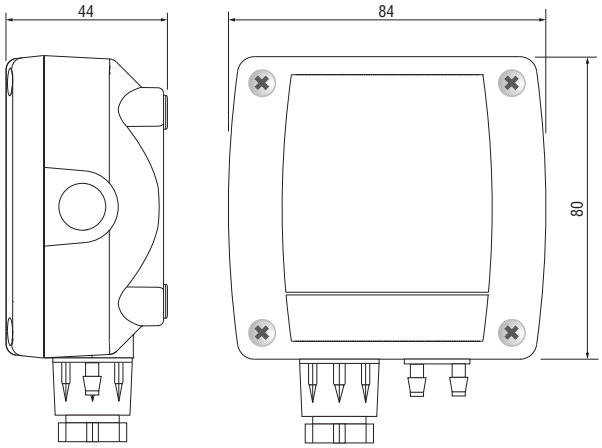

Fig. 1: dimensions (mm)

Installation

In any model the sensor and the electronics are housed in a rugged plastic case with IP67 protection degree. By opening the lid, 3 mm diameter holes are available so to allow securing the base of the transmitter directly to a panel or to the wall.

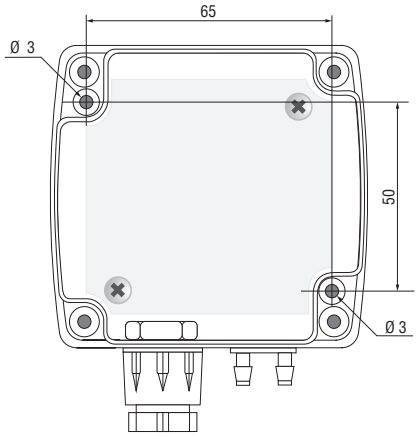

Fig. 2: fixing holes (dimensions in mm)

The transmitter can be mounted in any position, but typically it is secured on a vertical wall with the pressure taps facedown. The deviation of the zero due to the mounting position can be corrected by using CAL ZERO. The procedure for the manual calibration of the zero is the following:
make sure that the transmitter is powered at least for 1 hour;
disconnect both the tubes from the pressure + and – inputs;
press CAL ZERO until the red LED starts flashing;
when the red LED turns off, the zeroing procedure is completed and you can reconnect the tube to the pressure connections.
It is recommended to follow the auto-zero procedure at least once a year under normal operating conditions.

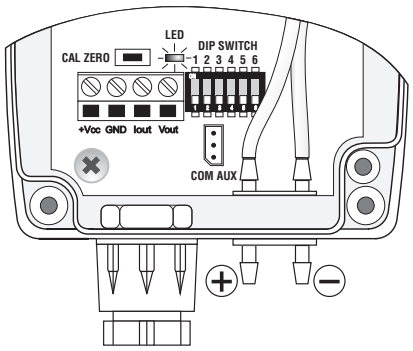

Fig. 3: CAL ZERO key and configuration dip switch

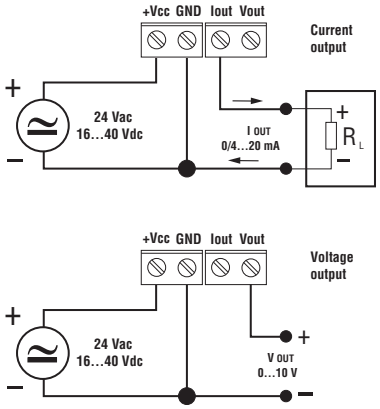

Fig. 4: electrical connections

Configuration

Setting the configuration mode: the transmitter can be configured by using the dip switches on the circuit board or via the serial communication port COM AUX. The choice of the configuration mode is done with the dip switch 1:

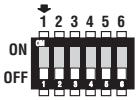

Dip switch 1 = ON → the configuration set through the dip switches 2...6 is used
Dip switch 1 = OFF → the configuration set via serial port is used

Configuration by dip switch

The configuration of the dip switches is used by the transmitter only if the dip switch 1 is ON.
The dip switches 2 and 3 select the low, intermediate or high measuring range.
The dip switches 4 and 5 select one of the four available units in the model.
The dip switch 6 sets the unipolar (0…+ f.s.) or bipolar (-f.s…+ f.s.) measuring range.
A dip switch is OFF when placed down, towards the serial connector. Instead, it is ON if placed up, towards the DIP SW sign.
The following tables report the measuring range, for each model, corresponding to the analog outputs according to dip switch positions.

TAB. 3: measuring ranges for outputs of the model HD402T1

Dip switch number										
6	2	3	4	5	4	5	4	5	4	5
			OFF	OFF	ON	OFF	OFF	ON	ON	ON
			Pa		mmH_2O		$inchH_2O$		mbar	
OFF	OFF	ON	0…50.0 Pa		0…5.00 mmH_2O		0…0.200 $inchH_2O$		0…0.500 mbar	
	ON	OFF	0…100.0 Pa		0…10.00 mmH_2O		0…0.400 $inchH_2O$		0…1.000 mbar	
	OFF	OFF	0…250.0 Pa		0…25.00 mmH_2O		0…1.000 $inchH_2O$		0…2.500 mbar	
	ON	ON								
ON	OFF	ON	-50.0…+50.0 Pa		-5.00…+5.00 mmH_2O		-0.200…+0.200 $inchH_2O$		-0.500…+0.500 mbar	
	ON	OFF	-100.0…+100.0 Pa		-10.00…+10.00 mmH_2O		-0.400…+0.400 $inchH_2O$		-1.000…+1.000 mbar	
	OFF	OFF	-250.0…+250.0 Pa		-25.00…+25.00 mmH_2O		-1.000…+1.000 $inchH_2O$		-2.500…+2.500 mbar	
	ON	ON								

TAB. 4: measuring ranges for outputs of the model HD402T2

Dip switch number										
6	2	3	4	5	4	5	4	5	4	5
			OFF	OFF	ON	OFF	OFF	ON	ON	ON
			Pa		mmH_2O		$inchH_2O$		mbar	
OFF	OFF	ON	0…250 Pa		0…25.0 mmH_2O		0…1.00 $inchH_2O$		0…2.50 mbar	
	ON	OFF	0…500 Pa		0…50.0 mmH_2O		0…2.00 $inchH_2O$		0…5.00 mbar	
	OFF	OFF	0…1000 Pa		0…100.0 mmH_2O		0…4.00 $inchH_2O$		0…10.00 mbar	
	ON	ON								
ON	OFF	ON	-250…+250 Pa		-25.0…+25.0 mmH_2O		-1.00…+1.00 $inchH_2O$		-2.50…+2.50 mbar	
	ON	OFF	-500…+500 Pa		-50.0…+50.0 mmH_2O		-2.00…+2.00 $inchH_2O$		-5.00…+5.00 mbar	
	OFF	OFF	-1000…+1000 Pa		-100.0…+100.0 mmH_2O		-4.00…+4.00 $inchH_2O$		-10.00…+10.00 mbar	
	ON	ON								
	ON	ON								

TAB. 5: measuring ranges for outputs of the model HD402T3

Dip switch number										
6	2	3	4	5	4	5	4	5	4	5
			OFF	OFF	ON	OFF	OFF	ON	ON	ON
			kPa		mmHg		PSI		mbar	
OFF	OFF	ON	0…2.50 kPa		0…10.00 mmHg		0…0.400 PSI		0…25.0 mbar	
	ON	OFF	0…5.00 kPa		0…25.00 mmHg		0…0.750 PSI		0…50.0 mbar	
	OFF	OFF	0…10.00 kPa		0…50.00 mmHg		0…1.500 PSI		0…100.0 mbar	
	ON	ON								
ON	OFF	ON	-2.50…+2.50 kPa		-10.00…+10.00 mmHg		-0.400…+0.400 PSI		-25.0…+25.0 mbar	
	ON	OFF	-5.00…+5.00 kPa		-25.00…+25.00 mmHg		-0.750…+0.750 PSI		-50.0…+50.0 mbar	
	OFF	OFF	-10.00…+10.00 kPa		-50.00…+50.00 mmHg		-1.500…+1.500 PSI		-100.0…+100.0 mbar	
	ON	ON								
	ON	ON								

TAB. 6: measuring ranges for outputs of the model HD402T4

Dip switch number										
6	2	3	4	5	4	5	4	5	4	5
			OFF	OFF	ON	OFF	OFF	ON	ON	ON
			kPa		mmHg		PSI		mbar	
OFF	OFF	ON	0…25.0 kPa		0…100.0 mmHg		0…4.00 PSI		0…250 mbar	
	ON	OFF	0…50.0 kPa		0…250.0 mmHg		0…7.50 PSI		0…500 mbar	
	OFF	OFF	0…100.0 kPa		0…500.0 mmHg		0…15.00 PSI		0…1000 mbar	
	ON	ON								
ON	OFF	ON	-25.0…+25.0 kPa		-100.0…+100.0 mmHg		-4.00…+4.00 PSI		-250…+250 mbar	
	ON	OFF	-50.0…+50.0 kPa		-250.0…+250.0 mmHg		-7.50…+7.50 PSI		-500…+500 mbar	
	OFF	OFF	-100.0…+100.0 kPa		-500.0…+500.0 mmHg		-15.00…+15.00 PSI		-1000…+1000 mbar	
	ON	ON								
	ON	ON								

TAB. 7: measuring ranges for outputs of the model HD402T5

Dip switch number										
6	2	3	4	5	4	5	4	5	4	5
			OFF	OFF	ON	OFF	OFF	ON	ON	ON
			kPa		mmHg		PSI		mbar	
OFF	OFF	ON	0…50.0 kPa		0…250 mmHg		0…10.00 PSI		0…500 mbar	
	ON	OFF	0…100.0 kPa		0…500 mmHg		0…15.00 PSI		0…1000 mbar	
	OFF	OFF	0…200.0 kPa		0…1000 mmHg		0…30.00 PSI		0…2000 mbar	
	ON	ON								
ON	OFF	ON	-50.0…+50.0 kPa		-250…+250 mmHg		-10.00…+10.00 PSI		-500…+500 mbar	
	ON	OFF	-100.0…+100.0 kPa		-500…+500 mmHg		-15.00…+15.00 PSI		-1000…+1000 mbar	
	OFF	OFF	-200.0…+200.0 kPa		-1000…+1000 mmHg		-30.00…+30.00 PSI		-2000…+2000 mbar	
	ON	ON								
	ON	ON								

Configuration via the serial port COM AUX

The configuration set with the serial communication is used by the transmitter only if the dip switch 1 is OFF.

In order to modify the settings, please proceed as follows:

Connect the serial COM AUX output of the transmitter to the RS232 port (via the RS27 cable) or USB (via the cable CP27) of the PC. If you use the CP27 cable, install the USB drivers on your PC.

On the PC, launch a program for serial communication (e.g. Hyperterminal), set the baud rate to 115200 and the communication parameters to 8N1.

Send the commands given in Table 9 to set the measurement range corresponding to the analog outputs.

TAB. 9: comandi seriali di configurazione

Command	Response	Description
Kn	&	Set the unit of measurement of index n HD402T1 & HD402T2 / HD402T3 & HD402T4 & HD402T5 n=0 → Pa / n=0 → kPa n=1→ mmH_2O / n=1 → mmHg n=2 → $inchH_2O$ / n=2 → PSI n=3 → mbar / n=3 → mbar
Rn	&	Sets the measuring range of index n n=0 → high range (e.g. 250 Pa / 25 mmH_2O / 1 "H_2O / 2,5 mbar in HD402T1) n=1 → intermediate range (e.g. 100 Pa / 10 mmH_2O / 0,4 "H_2O / 1 mbar in HD402T1) n=2 → low range (e.g. 50 Pa / 5 mmH_2O / 0,2 "H_2O / 0,5 mbar in HD402T1)
PU	&	Set the unipolar measuring range (0…+f.s.)
PB	&	Set the bipolar measuring range (-f.s.…+f.s.)
U0	&	Set the interval 0…20 mA for the analog current output
U1	&	Set the interval 4…20 mA for the analog current output

In order to read the settings of the transmitter, send the commands described in Table 10.

TAB. 10: serial commands to read the configuration

Comando	Risposta	Descrizione
G0	See the example below	It reads the current configuration of the transmitter. If the dip switch 1 is OFF, it returns the configuration set via the serial port. If the dip switch 1 is set to ON, it returns the configuration set by dip switch
GF	See the example below	It reads the configuration set by the serial port
GS	See the example below	It reads the configuration set by the dip switch

The commands for reading the configuration return a string consisting of:
- model
- full scale value set for the analog outputs
- polarity of the measuring range (U=unipolar, B=bipolar)
- range of the analog output current (0=0...20mA, 4=4...20 mA)

for example: the string "HD402T2 5.00mbar B40" indicates that the transmitter model is HD402T2, the full scale set for the analog outputs is 5.00 mbar, the measuring range is bipolar (-5.00…+5.00 mbar) and the analog current output type is 4...20 mA. The last character of the string (0 in the example) is a confidential code.

Display

Models with suffix L are equipped with a 4-digit LCD display. In models with LCD option, the measuring range shown on the display is always bipolar (-f.s.....+f.s.) and related to the maximum full scale available in the model (the setting of the measuring range only affects the behavior of the analog outputs).
The measure on the display is updated twice a second.

Error messages:

Undr → it appears if the measured value is less than the minimum measurable value
OvEr → it appears if the measured value exceeds the maximum measurable value
CAL Error → it appears at the end of the zero calibration if the maximum offset value possible to be corrected is exceeded.

Purchasing codes

HD402T…: Pressure relative to the atmosphere or differential pressure transmitters. For dry air and non-aggressive gases. Barbed connection diam. 5 mm for hose. Analogue output at choice between voltage 0...10 V or current 0...20 mA or 4...20 mA. Operating temperature -10...+60 °C. Power supply 16...40 Vdc or 24 Vac.

HD402T ☐ - [L]

L = with LCD display

Nominal full scale (f.s.):
1 = 250 Pa / 25 mmH2O / 1 inchH2O / 2,5 mbar
2 = 1000 Pa / 100 mmH2O / 4 inchH2O / 10 mbar
3 = 10 kPa / 50 mmHg / 1,5 PSI / 100 mbar
4 = 100 kPa / 500 mmHg / 15 PSI / 1000 mbar
5 = 200 kPa / 1000 mmHg / 30 PSI / 2000 mbar

Accessories

Included:
N°1 piece of silicone tubing Ø3.2/Ø6.4, length 2m
N°2 plastic fittings HD434T.5

Upon request:
HD3719: Air inlet for square or cylindrical channel.
HD3721: Air inlet for cylindrical channel, made of plastic.
RS27: RS232 null-modem serial connection cable with SubD 9-pin connector on the PC side and 3-pole connector on the side of the instrument.
CP27: Serial connection cable with USB connector on the PC side and 3-pole connector on the side of the instrument. The cable has a built-in USB/RS232 converter and it connects the instrument directly to the USB port of the PC.

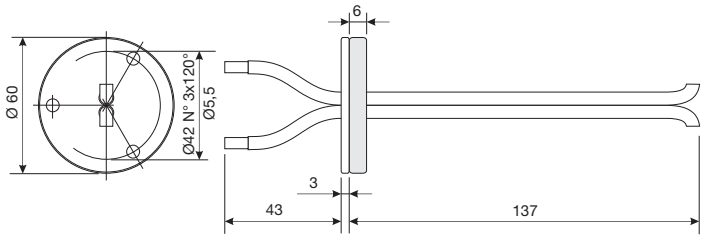

Fig. 5: channel probe AP3719

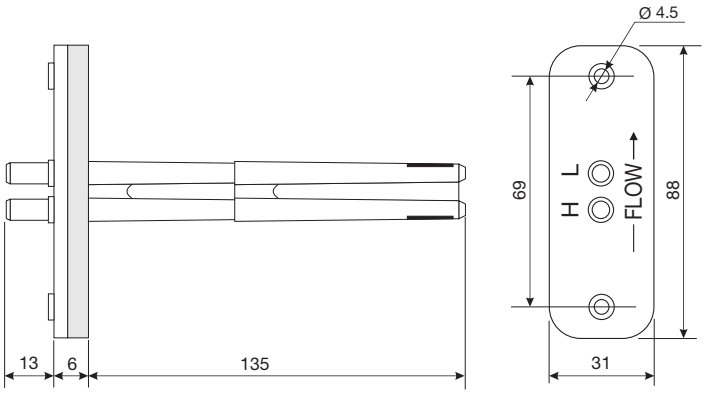

Fig. 6: channel probe AP3721

Example of connection with the indicator controller HD9022

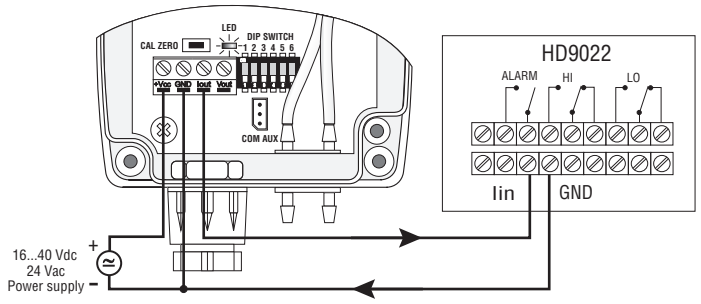

Fig. 7: current output 0…20 or 4…20 mA

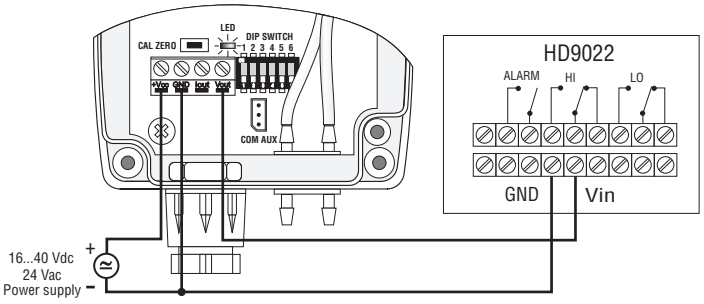

Fig. 8: voltage output 0…10 Vdc



HD 404T
VERY LOW PRESSURE TRANSMITTER

The series of HD404T transmitters is able to measure relative pressures with reference to the atmosphere or differential in the range from 50 to 1000 Pa (0.2" H_2O to 5" H_2O). HD404T transmitters use a silicon "micromachined" type sensor compensated in temperature that has an excellent linearity, repeatability and stability over time. The output signal from the sensor is amplified and converted into a standard analogical output in current (4...20mA) and in one in voltage (0...10V), which, then, can be transmitted over long distances with a high immunity to noise.
In each model it's possible to choose, via a dip switch, between two measurement ranges in order to select the optimal scale for each application.
Usually the low pressure transmitters are susceptible to the guidance by which they are mounted. In HD404T series there is available a special auto-zero circuit, which periodically equalize the differential pressure at the input sensor and corrects the offset; the transmitters, provided with this circuit, are insensitive to the mounting position. In addition, the circuit compensates autozero aging and the deviation of the zero of the sensor to temperature changes: virtually eliminates maintenance.





HD404T1PG-AZ-L

It's available the (L) "display" option, in which the pressure is visualized on a display with 4 digits in the selected measurement unit.
The (SR) "square root" is especially useful if the transmitter is connected to a Pitot or Darcy tube, as the output is directly proportional to the speed of airflow. The SR version with L option also allows to display, in addition to the pressure measured, the speed of airflow calculated. The SR version is configurable by the user by connecting the transmitter to a PC and sending serial commands via a standard communication software. It is possible to set the coefficient of the Pitot or Darcy tube used, the parameters for the calculation of the speed (airflow temperature, barometric pressure, differential static pressure in the duct), the speed unit of measurement (m/s or ft/s) and the speed full scale for the analog output. The transmitters are ready to use and are supplied calibrated at 3 points by the manufacturer.
Typical applications for HD404T series are clean room monitoring, filters' control, flow measures (matched with the Pitot tube), the air conditioning control and the ventilation one.

TECHNICAL COMMON FEATURES @ 20°C AND 24VDC

Sensor	Piezoresistive
Measurement range	from 0…50 Pa (0…0,2" H_2O) to 0…1000 Pa (0…4" H_2O) relative and differential (see table) For the SR models, the speed measurement ranges depend on the tube constant, the temperature and the pressure (see table)
Output signal	0…10 Vdc R_L > 10 kΩ and 4…20 mA R_L < 500 Ω
Accuracy	It depends on the model (see table)
Response time	1 s (fast) or 4 s (slow) selectable through jumper
Over-pressure limit	25 kPa
Compatible media	Only air and non-aggressive gases
Power supply	24 Vac ± 10% or 16…40 Vdc
Absorption	< 1 W
Pressure fit	With Ø 5 mm flexible tube
Electrical connections	Terminal board with screws, max 1.5 mm², PG9 conduit for input cable
Working conditions	-10...+60 °C (-5…+50 °C for models with auto-zero AZ), 0…95% RH
Storage temperature	-20...+70 °C
Case sizes	80 x 84 x 44 mm
Degree of protection	IP67

INSTALLATION
In all the models, the sensor and the electronic are contained in a sturdy plastic case with an IP67 protection degree. Opening the lid are available 3 mm diameter holes that let you set the base of the transmitter directly to a panel or a wall.

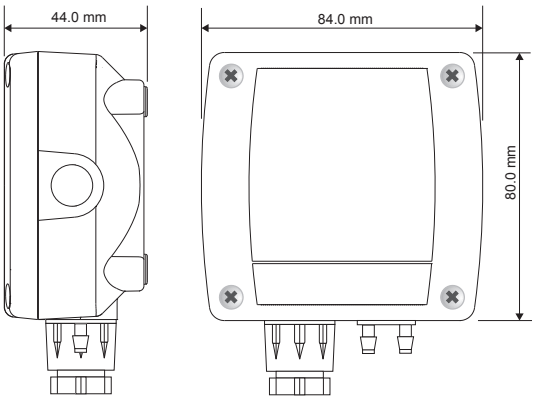

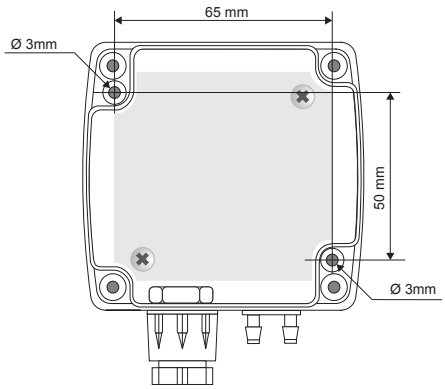

HD404T can be mounted in any position, but typically on a vertical wall with the pressure inlets facing downwards. The gap from zero due to the mounting position can be compensated by using CAL ZERO button. The procedure to follow for manual calibration of zero is the following one:

- Make sure that the transmitter is powered by at least 1 hour;
- Disconnect both tubes from the + and – pressure inlets;
- Press CAL ZERO button until the red LED starts to flash;
- When the red led turns off, the zero procedure is completed and you can reconnect the tubes to pressure fits.

We suggest you to perform the auto-zero procedure at least once a year under normal working conditions.

In models with auto-zero circuit (AZ option), this procedure is regularly performed every 15 minutes without disconnecting the hoses from pressure taps. During the reset, which takes about 4 seconds, the analogical outputs and the display will remain frozen at the measured value. Models with auto-zero have virtually no need for maintenance.

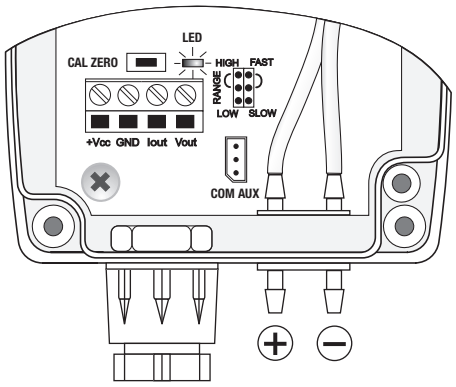

CAL ZERO button and configuration jumpers

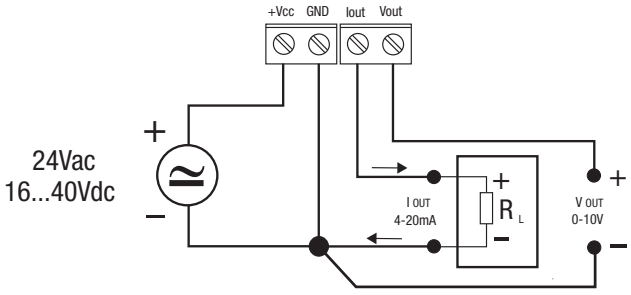

Electrical connections

CONFIGURATION

Setting the output range: the RANGE jumper allows you to choose one of this output ranges: with LOW you choose the low range, with HIGH the extended range.

Response time setting: the FAST SLOW jumper lets you choose the response time of the transmitter: in FAST position the measurement is integrated over 1 s, while in SLOW position is integrated over 4 s. SLOW position is recommended if there are conditions of turbulence or disruption of air flow.

Setting of the parameters in the SR versions: the transmitters are preset by the factory. To change the settings, proceed as follows:

- Connect the transmitter COM AUX serial output to the PC RS232 (through the **RS27** cable) or USB (through the **CP27** cable) port. If the CP27 cable is used, install in the PC the related USB drivers.
- In the PC, run a serial communication software (e.g. Hyperterminal), set the baud rate to 115200 and the communication parameters to 8N2.
- To change the display configuration (commands 03E, 03D, 04E, 04D, 05E, 05D) it is necessary to send the CAL START command to enter the configuration mode. It is not necessary to send the CAL START command to change the parameters related to the speed measurement (tube coefficient, temperature, pressure, full scale for the analog output).
- Send the commands in the following table to set or read the configuration parameters of the transmitter:

SUMMARY TABLE OF MODELS AND ACCURACY

MODEL	RANGE		ACCURACY %F.S. RANGE HIGH (0...+50 °C)	LONG TERM STABILITY (1 YEAR)	
	LOW	HIGH		AZ	NO AZ
	Pa				
HD404T1PG-AZ(-L-SR)	0...50 Pa	0...100 Pa	±3%	≤±1Pa	
HD404T2PG-AZ(-L-SR)	0...100 Pa	0...250 Pa	±1,5%	≤±1Pa	
HD404T3PG(-AZ-L-SR)	0...250 Pa	0...500 Pa	±1%	≤±1Pa	≤±8Pa
HD404T4PG(-AZ-L-SR)	0...500 Pa	0...1000 Pa	±1%	≤±1Pa	≤±8Pa
HD404T1PD-AZ(-L)	-50...+50 Pa	-100...+100 Pa	±1,5%	≤±1Pa	
HD404T2PD-AZ(-L)	-100...+100 Pa	-250...+250 Pa	±1%	≤±1Pa	
HD404T3PD(-AZ-L)	-250...+250 Pa	-500...+500 Pa	±1%	≤±1Pa	≤±8Pa
HD404T4PD(-AZ-L)	-500...+500 Pa	-1000...+1000 Pa	±1%	≤±1Pa	≤±8Pa
	mmH_2O				
HD404T1MG-AZ(-L-SR)	0...5 mmH_2O	0...10 mmH_2O	±3%	≤±0,1 mmH_2O	.
HD404T2MG-AZ(-L-SR)	0...10 mmH_2O	0...25 mmH_2O	±1,5%	≤±0,1 mmH_2O	
HD404T3MG(-AZ-L-SR)	0...25 mmH_2O	0...50 mmH_2O	±1%	≤±0,1 mmH_2O	≤±0,8 mmH_2O
HD404T4MG(-AZ-L-SR)	0...50 mmH_2O	0...100 mmH_2O	±1%	≤±0,1 mmH_2O	≤±0,8 mmH_2O
HD404T1MD-AZ(-L)	-5...+5 mmH_2O	-10...+10 mmH_2O	±1,5%	≤±0,1 mmH_2O	
HD404T2MD-AZ(-L)	-10...+10 mmH_2O	-25...+25 mmH_2O	±1%	≤±0,1 mmH_2O	
HD404T3MD(-AZ-L)	-25...+25 mmH_2O	-50...+50 mmH_2O	±1%	≤±0,1 mmH_2O	≤±0,8 mmH_2O
HD404T4MD(-AZ-L)	-50...+50 mmH_2O	-100...+100 mmH_2O	±1%	≤±0,1 mmH_2O	≤±0,8 mmH_2O
	$inchH_2O$				
HD404T1IG-AZ(-L-SR)	0...0.2 $inchH_2O$	0...0.4 $inchH_2O$	±3%	≤±0,04 $inchH_2O$	
HD404T2IG-AZ(-L-SR)	0...0.4 $inchH_2O$	0...1 $inchH_2O$	±1,5%	≤±0,04 $inchH_2O$	
HD404T3IG(-AZ-L-SR)	0...1 $inchH_2O$	0...2 $inchH_2O$	±1%	≤±0,04 $inchH_2O$	≤±0,04 $inchH_2O$
HD404T4IG(-AZ-L-SR)	0...2 $inchH_2O$	0...4 $inchH_2O$	±1%	≤±0,04 $inchH_2O$	≤±0,04 $inchH_2O$
HD404T1ID-AZ(-L)	-0.2...0.2 $inchH_2O$	-0.4...0.4 $inchH_2O$	±1,5%	≤±0,04 $inchH_2O$	
HD404T2ID-AZ(-L)	-0.4...0.4 $inchH_2O$	-1…+1 $inchH_2O$	±1%	≤±0,04 $inchH_2O$	
HD404T3ID(-AZ-L)	-1...+1 $inchH_2O$	-2...+2 $inchH_2O$	±1%	≤±0,04 $inchH_2O$	≤±0,04 $inchH_2O$
HD404T4ID(-AZ-L)	-2...+2 $inchH_2O$	-4...+4 $inchH_2O$	±1%	≤±0,04 $inchH_2O$	≤±0,04 $inchH_2O$

Command	Reply	Description
O3E	&	Shows alternately speed and pressure on display
O3D	&	Disables the alternating display of speed and pressure
O4E	&	Automatic change of speed resolution on display (0,1 or 0,01) depending on the measured value [1]
O4D	&	Fixed centesimal speed resolution on display [1]
O5E	&	Sets ft/s as speed unit of measurement on display *Note*: the symbol ft/s does not appear on display
O5D	&	Sets m/s as speed unit of measurement on display (default)
CK n.n…	&	Sets the Pitot or Darcy tube coefficient to the value n.n… The value must be between 0.6 and 1.2 (default = 1.0)
RK	n.nnnnnl	Reads the value of the tube coefficient set in the transmitter
CB nnnn.nn…	&	Sets the barometric pressure to the value nnnn.nn… mbar The value must be between 500 and 1500 mbar (default = 1013.25 mbar)
RB	nnnn.nnnl	Reads the value of the barometric pressure in mbar set in the transmitter
CT n…	&	Sets the airflow temperature in tenths of °C (default = 160 → 16.0 °C) The value must be between -999 (→ -99.9 °C) and 2000 (→ 200.0 °C)
RT	n…l	Reads the value of the temperature, in tenths of °C, set in the transmitter
CP nnnn…	&	Sets the differential static pressure [2] in mbar (default = 0)
RP	nnnn…l	Reads the value of the differential static pressure [2] set in the transmitter
CS nnnn	&	Sets the full scale speed, in hundredths of m/s, for the analog output (default = see table). The max settable value is 10000 (→ 100.00 m/s)
RS	nn.nnl	Reads the speed full scale value, in m/s, for the analog output
SV	nn.nnl	Prints the max measurable speed as a function of the transmitter full scale pressure and values set for the parameters. The value is in the speed unit of measurement set in the transmitter.

[1] The speed is calculated from the pressure measure through a quadratic relationship. For this reason, the speed resolution is lower for low pressure values measured, and the change of the speed measurement on the display appears rather discontinuous if the fixed centesimal resolution is used. If a more uniform speed change on display is desired, enable the automatic speed resolution change as a function of the measured value.

[2] The differential static pressure is equal to the difference between the absolute static pressure inside the duct and the barometric pressure. The differential static pressure is zero if the duct is open (in contact with the atmosphere), while it can be different from zero in case of closed ducts.

To exit the configuration mode after sending the CAL START command, send the CAL END command (the transmitter automatically exits the configuration mode after 5 minutes from the last command sent).

DISPLAY

Models with L suffix are provided with a LCD display with 4 digits.

Pressure display resolution:

50 - 100 - 250 - 500 Pa → 0.5 Pa
1000 Pa → 1 Pa
5 - 10 - 25 - 50 mmH_2O → 0.05 mmH_2O
100 mmH_2O → 0.1 mmH_2O
0.2 – 0.4 - 1 - 2 - 4 $inchH_2O$ → 0.002 $inchH_2O$

Speed display resolution in the SR models: for all the ranges, the speed resolution can be centesimal fixed or with automatic change from decimal to centesimal as a function of the measured value. The selection between the two options is made via the serial commands O4E and O4D.

Error reporting:

Undr → it appears if the measured value is smaller than the minimum value that can be measured
OvEr → it appears if the measured value exceeds the maximum value that can be measured
CAL Error → it appears when the zero calibration is finished if the maximum offset value that can be corrected is exceeded.

SPEED FULL SCALE IN THE SR MODELS

In the SR models, the maximum speed measurable depends on the coefficient of the tube used, the temperature, the barometric pressure and the differential static pressure set in the transmitter. The serial command SV allows to read the maximum speed measurable as a function of the parameters setting. The following table shows the maximum speed measurable by the various models with the values of the parameters preset by the factory: tube coefficient **K = 1.0**, temperature **T = 16.0 °C**, barometric pressure **Patm = 1013.25 mbar**, differential static pressure **Ps = 0**.

MODEL	MAX SPEED MEASURABLE (@ K = 1, T = 16°C, Patm = 1013.25 mbar, Ps = 0)		DEFAULT FULL SCALE FOR THE ANALOG OUTPUT (changeable with the CS command)
	LOW	HIGH	
HD404T1PG-AZ(-L)-SR	9,06 m/s	12,82 m/s	10 m/s
HD404T2PG-AZ(-L)-SR	12,82 m/s	20,27 m/s	20 m/s
HD404T3PG(-AZ-L)-SR	20,27 m/s	28,67 m/s	25 m/s
HD404T4PG(-AZ-L)-SR	28,67 m/s	40,55 m/s	40 m/s
HD404T1MG-AZ(-L)-SR	8,98 m/s	12,70 m/s	10 m/s
HD404T2MG-AZ(-L)-SR	12,70 m/s	20,08 m/s	20 m/s
HD404T3MG(-AZ-L)-SR	20,08 m/s	28,39 m/s	25 m/s
HD404T4MG(-AZ-L)-SR	28,39 m/s	40,16 m/s	40 m/s
HD404T1IG-AZ(-L)-SR	9,05 m/s	12,80 m/s	10 m/s
HD404T2IG-AZ(-L)-SR	12,80 m/s	20,24 m/s	20 m/s
HD404T3IG(-AZ-L)-SR	20,24 m/s	28,62 m/s	25 m/s
HD404T4IG(-AZ-L)-SR	28,62 m/s	40,48 m/s	40 m/s

The following graphs show the change of the maximum measurable speed value (normalized to 1 for T=16.0 °C and Patm=1013.25 mbar) with the change of the temperature and barometric pressure.

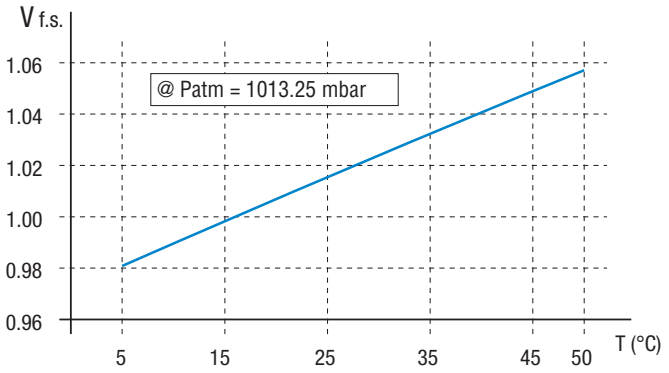

Change of the full scale speed with the temperature at constant barometric pressure

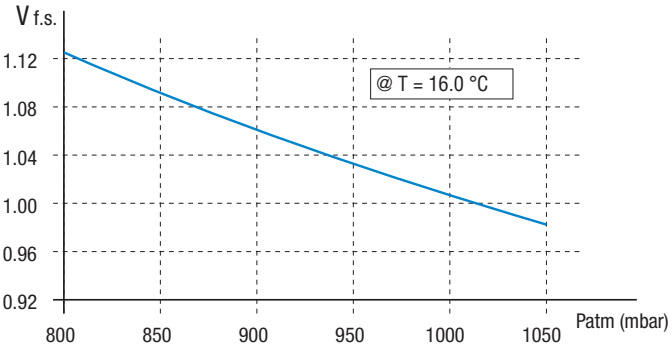

Change of the full scale speed with the barometric pressure at constant temperature

In the SR models, the serial command “CS nnnn” allows to associate to the full scale of the analog output a speed value chosen by the user, even different from the maximum value actually measurable by the transmitter.

ACCESSORIES

Supplied:

- N°1 piece of ∅3.2/∅6.4 silicone tube 2m long
- N°2 HD434T.5 plastic fittings

Under request:

HD3719: Flow offtake for square or cylindrical channel. Two pieces of ∅3.2/∅6.4 tube 1m long.

HD3721: Flow offtake for plastic material cylindrical channel. Two pieces of ∅3.2/∅6.4 tube 1m long.

RS27: RS232 null-modem serial connection cable with 9-pole SubD connector for the PC and 3-pole connector for the COM AUX port of the instrument.

CP27: Serial connection cable with USB connector for the PC and 3-pole connector for the COM AUX port of the instrument. The cable has a builtin USB/RS232 converter and connects the transmitter directly to the USB port of the PC.

Pitot tubes: see list and dimensions at next page.

AP3719 duct probe

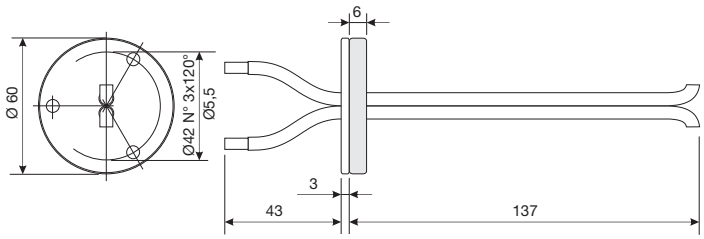

AP3721 duct probe:

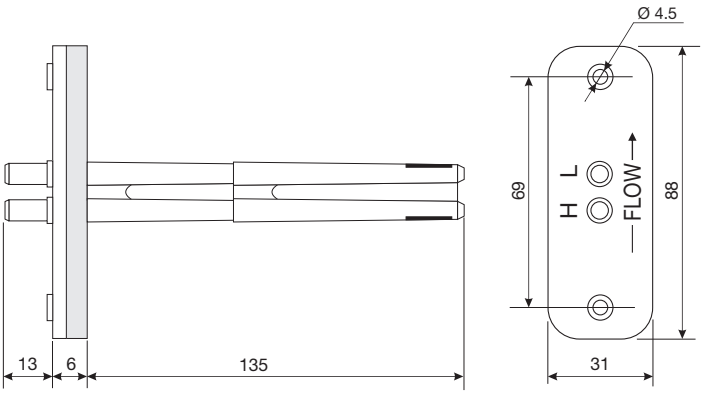

HD404T [1P] - [G] - [AZ] - [L] - [SR]

SR = with square root output
(not available for type D versions)

L = with LCD display

AZ = with auto-zero circuit

D = differential pressure –f.s…+f.s.
G = relative pressure with reference to the atmosphere 0…+f.s.

Nominal full scale (f.s.):
1P = 100Pa, **2P** = 250Pa, **3P** = 500Pa, **4P** = 1000Pa
1M = 10mmH_2O, **2M** = 25mmH_2O, **3M** = 50mmH_2O, **4M** = 100mmH_2O
1I= 0.4inchH_2O, **2I** = 0.8inchH_2O, **3I** = 2inchH_2O, **4I** = 4inchH_2O

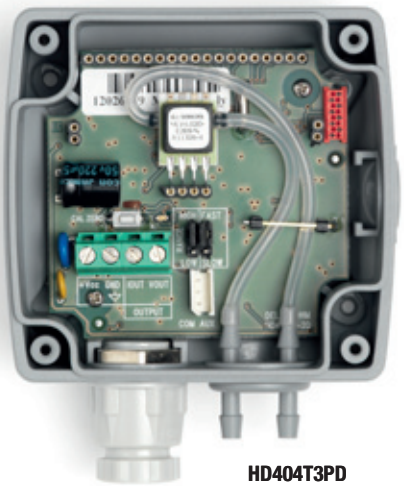

HD404T3PD

PITOT TUBES

Stainless steel Pitot tubes for air speed measurement,
supplied with silicone tube Ø 6mm external, Ø 4mm internal, length 2m.

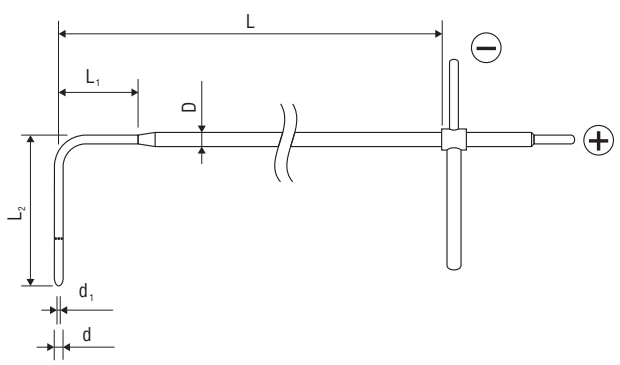

	d mm	d_1 mm	D mm	L mm	L_1 mm	L_2 mm	Temp. °C	Material
T1-300	3	1	6	300	30	72	0…600°C	AISI 316
T2-400	5	2	8	400	45	120		
T2-600	5	2	8	600	45	120		
T3-500	8	3,2	8	500	---	192		
T3-800	8	3,2	8	800	---	192		
T4-500	10	4,0	10	500	---	240		
T4-800	10	4,0	10	800	---	240		
T4-1000	10	4,0	10	1000	---	240		

Examples of connection with HD9022 indicator regulator

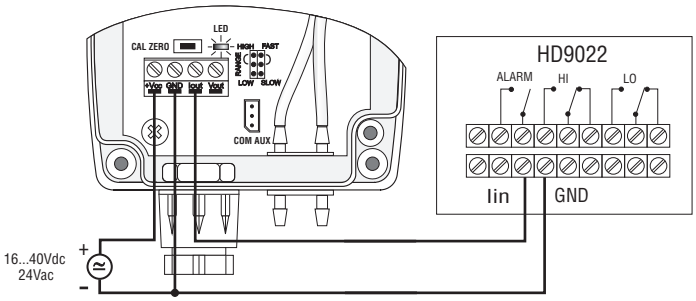

Current output 4…20mA

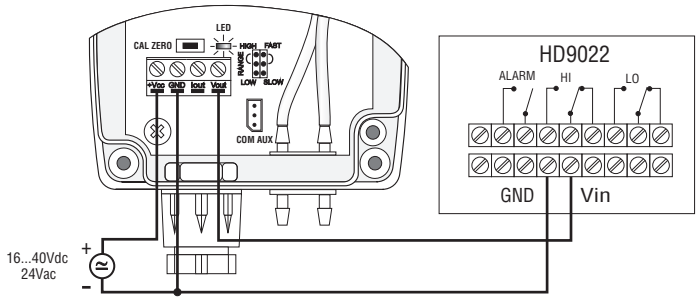

Voltage output 0…10Vdc



HD 9408T BARO
HD 9408TR BARO
HD 9908T BARO



mbar

HD 9408T BARO, HD 9408TR BARO, HD 9908T BARO BAROMETRIC TRANSMITTERS

HD 9408T BARO, HD 9408TR BARO and **HD 9908T BARO** are analog output electronic barometers. They use a piezoresistive sensor element which gives extremely accurate and stable measurement of the atmospheric pressure and assures excellent repeatability, low hysteresis and very good temperature stability. The output signal of the sensor is conditioned to provide a voltage or a current output linearly proportional to the barometric pressure. The transmitters are ready as they have been calibrated at the factory. A zero adjustments potentiometer is available for offset to station elevation.
HD9408T BARO requires a continuous dc power supply, its low power consumption (< 4 mA) makes it ideal for portable and remote battery or solar powered applications. It is available in different kinds of analog output: 0-1 Vdc, 0-5 Vdc (1-5 Vdc, 1-6 Vdc on request) or 4-20 mA (two wires).
HD 9408TR BARO offers superior temperature performance: the internal circuitry allows the sensor to work at constant temperature so that it achieves accurate temperature compensation over the whole range from -40°C to +60°C.
HD 9408TR BARO requires a continuous dc power supply and a differential cabling connection to achieve best results. It is available in different output versions: 0÷1 Vdc, 0÷5 Vdc (1÷5 Vdc, 1÷6 Vdc on request).
HD 9908T BARO, unlike the other models, is equipped with a display showing the pressure measurements, an analog output 0÷20 mA, 4÷20 mA, 0÷1 V and 0÷5 V (0÷10 V on request) configurable by the customer and with an ON/OFF relay output with programmable alarm threshold.
HD 9908T BARO requires a 24 Vac (or 230 Vac on request) power supply.

HD 9408T BARO, HD 9408TR BARO and **HD 9908T BARO** are low cost and excellent performance solutions for meteorological applications, environmental monitoring systems, metrological and environmental data logging, altitude applications, barometric pressure compensation in the performance of internal combustion engine, cleanroom barometric pressure compensation, testing of vehicle emissions.

HOUSING AND INSTALLATION

In all models the sensor electronics are housed in a sturdy MACROLON with IP67 protection. Opening the lid holes are available that allow you to secure the base of the transmitter directly to a panel or a wall. The measurement accuracy is independent of the position of the transmitter. However, it is advisable to mount the transmitter so that the sensor is facing down to reduce dust and dirt on the filter. If the installation is in an open environment is recommended to use a special static port to minimize errors caused by the wind flow on the input pressure.

CONNECTION DIAGRAM AND OPERATION

- Make the power connections for the HD 9908T BARO.
- Make the connections for the relay output, the relay contact is free.
- Select the analog output 0÷20 mA, 4÷20 mA, 0÷1 V, 0÷5 V by means of the jumper.
- Switch on the instrument, press the PUSH button and turn the SET trimmer to set the desired threshold value between 800 and 1100 mbar; the set value is shown on the LCD display.
- Using the trimmer ⎍, set the desired HYS (=hysteresis) value between 5 and 50 mbar.
- The instrument will now indicate the barometric pressure; HI led, LO led or ALARM led and ALARM relay will switch on if one the following cases occurs (see table 1).

NOTE: the ALARM led comes on to indicate that the relay is energized and the contact is closed.

- **Once installation is completed, check that the cover is tightly closed; the same applies to the grommets.**

TABLE 1	HI	LO	LED ALARM
MEASURE > SET, MEASURE < SET + HYS	ON	OFF	OFF
MEASURE > SET, MEASURE > SET + HYS	ON	OFF	ON
MEASURE < SET, MEASURE > SET - HYS	OFF	ON	OFF
MEASURE < SET, MEASURE < SET - HYS	OFF	ON	ON

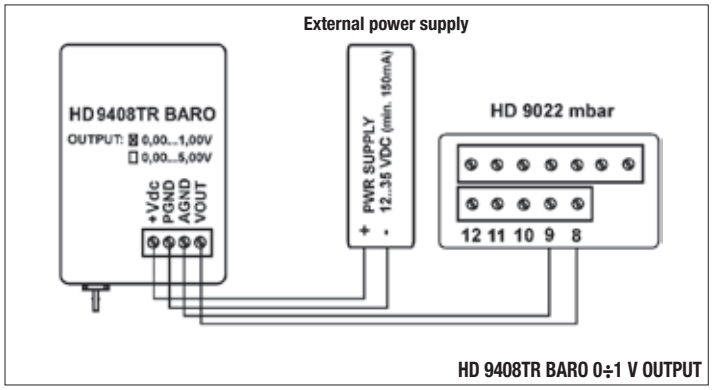

HD 9408TR BARO 0÷1 V OUTPUT

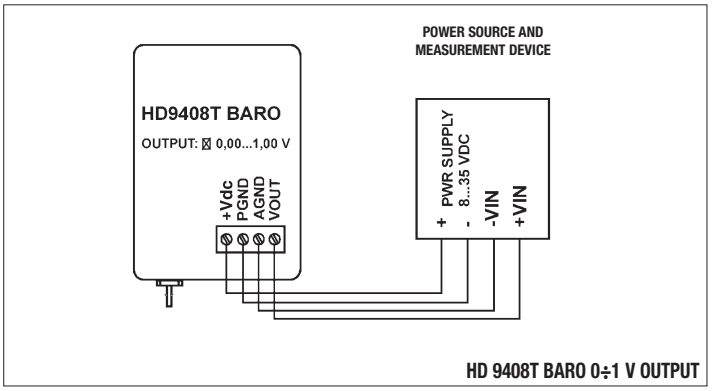

HD 9408T BARO 0÷1 V OUTPUT

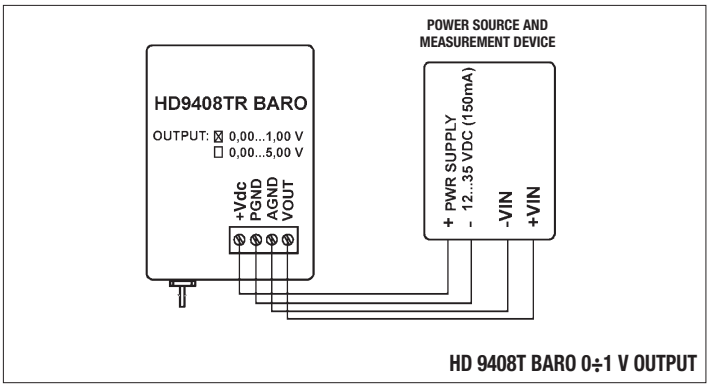

HD 9408T BARO 0÷1 V OUTPUT

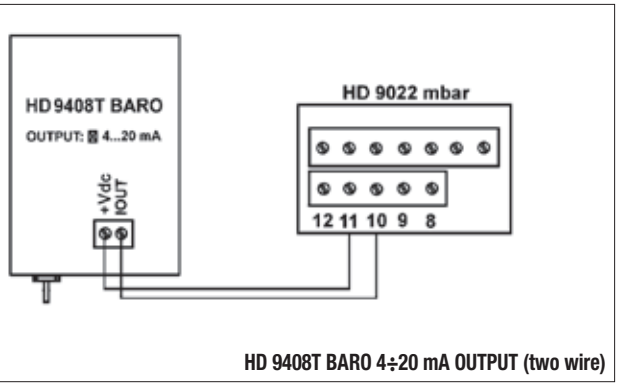

HD 9408T BARO 4÷20 mA OUTPUT (two wire)

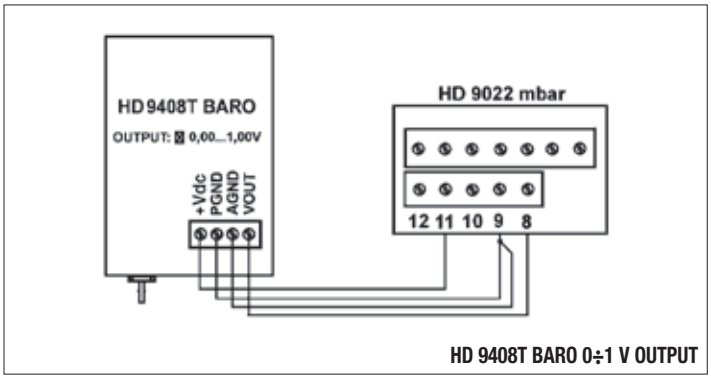

HD 9408T BARO 0÷1 V OUTPUT

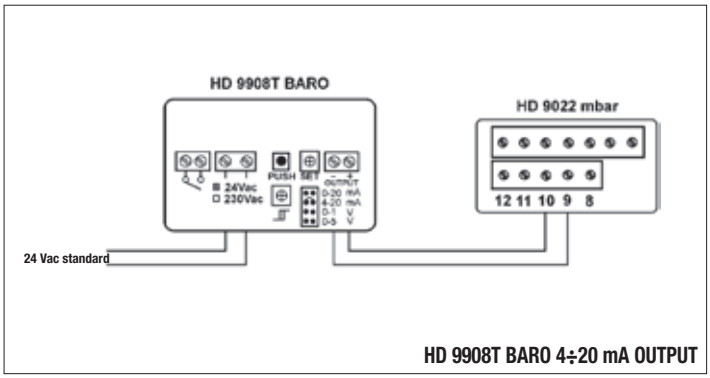

HD 9908T BARO 4÷20 mA OUTPUT

	HD9408T BARO	HD9408TR BARO	HD9908T BARO
Sensor type	Piezoresistive diaphragm		
Measuring range	800 ÷ 1100 mbar / 600 ÷ 1100 mbar on request		
Analog output	0 ÷ 1 Vdc standard; 0 ÷ 5 Vdc, 1 ÷ 6 Vdc and 4 ÷ 20 mA (two wires) on request	0 ÷ 1 Vdc standard; 0 ÷ 5 Vdc, 1 ÷ 5 Vdc and 1 ÷ 6 Vdc on request	0 ÷ 20 mA, 4 ÷ 20 mA, 0 ÷ 1 V and 0 ÷ 5 V (0 ÷ 10 V on request), configurable by means of a jumper.
Accuracy	± 0.5 mbar, @ 20°C	± 0.5 mbar, @ 20°C	Display: ± 1 mbar, @20°C Analog output: ± 0,8 mbar, @ 20°C
Resolution	Infinite	Infinite	Display: 1 mbar Analog output: Infinite
Thermal effects	< 1% F.S., zero; <1% F.S., span over –20°C to +60°C (-4° to 140°F)	± 0.8 mbar over –40°C to +60°C (-40° to 40°F)	< 1% F.S. zero, <1% F.S. span over –20°C to +60°C (-4° to 140°F)
Long term stability	< 0.25 % F.S. over 6 months at 20°C	< 0.2 % F.S. over 6 months at 20°C	< 0.25 % F.S. over 6 months at 20°C
Turn on time	1 sec. to 99% of full scale reading	5 min @ 24 Vdc supply to 99% of full scale reading	5 sec. to 99% of full scale reading
Response time	< 200 ms after pressure stabilization		
Relay contact output	Absent	Absent	3A/230 Vac resistive load
Set point	Absent	Absent	Configurable from 800 to 1100 mbar
Supply Voltage	8 ÷ 35 Vdc	12 ÷ 35 Vdc	24 Vac ±10% (230 Vac on request)
Supply current	< 4 mA	25 mA @ 20°C, 24 Vdc (warm-up 120 mA)	1VA
Operating Temperature	-30 ÷ +60°C	-40 ÷ +60°C	-20 ÷ +60°C
Media compatibility	Air and dry gases only		
Overload pressure	2 bar - 30 PSI		

ORDERING CODE

HD9408T BARO 800÷1100mbar barometric transmitter output 0÷1Vdc. Upon request output: 0÷5Vdc, 1÷5Vdc, 1÷6Vdc, 4÷20mA. Working temperature range -30°C ÷ +60°C.

HD9408TR BARO 800÷1100mbar barometric transmitter output 0÷1Vdc. Upon request output 0÷5Vdc, 1÷5Vdc. Temperature working range –40°C ÷ +60°C, heated sensor

HD9908T BARO 800÷1100mbar digital barometric transmitter with LCD indication. Outputs: 0÷20mA, 4÷20mA, 0÷1Vdc, 0÷5Vdc. Working temperature range -20°C ÷ +60°C.

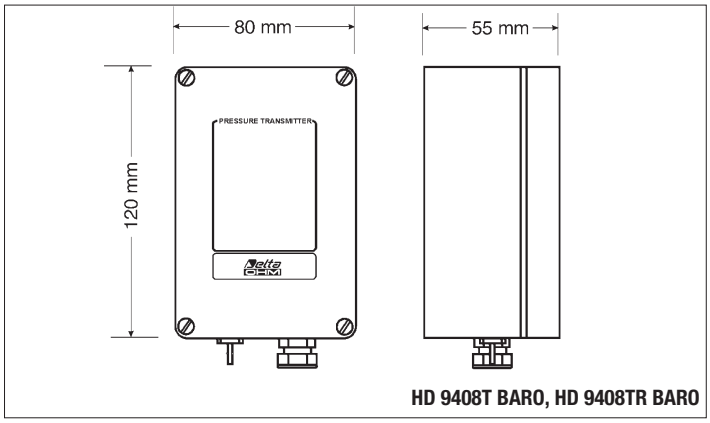

HD 9408T BARO, HD 9408TR BARO

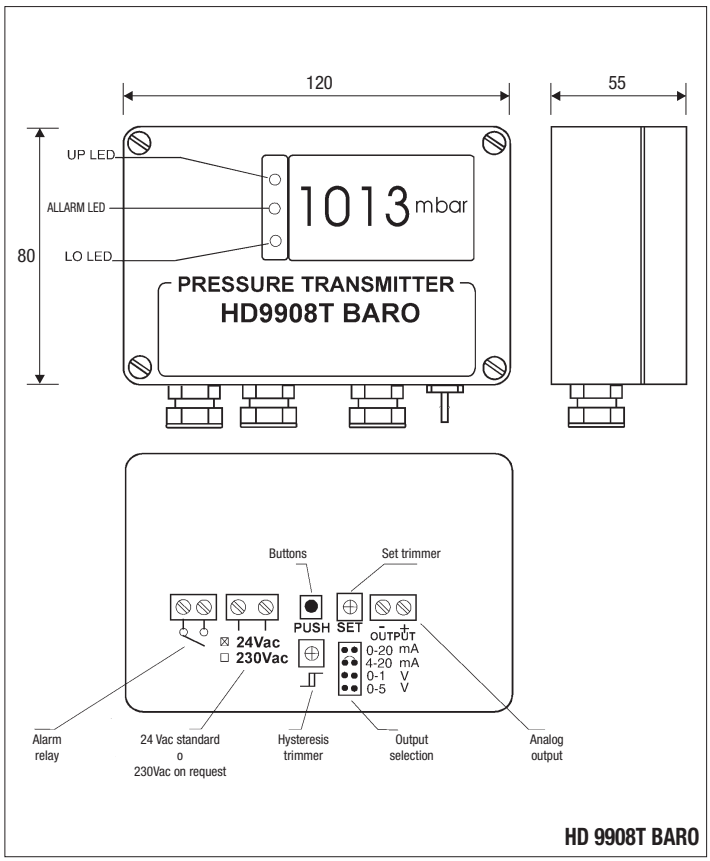

HD 9908T BARO

HD9408PS 50



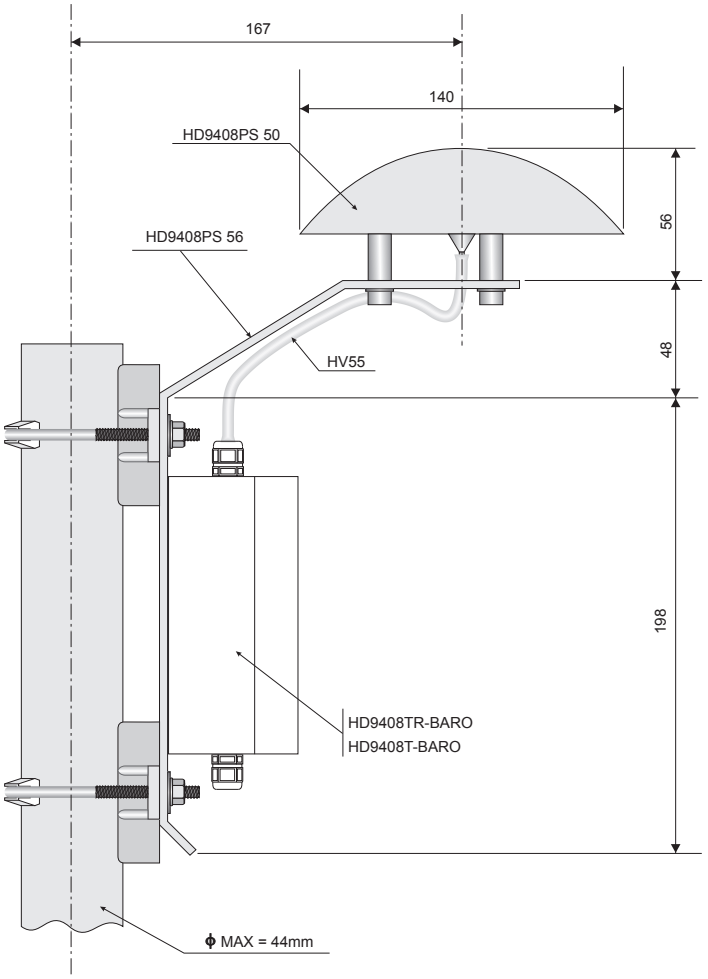

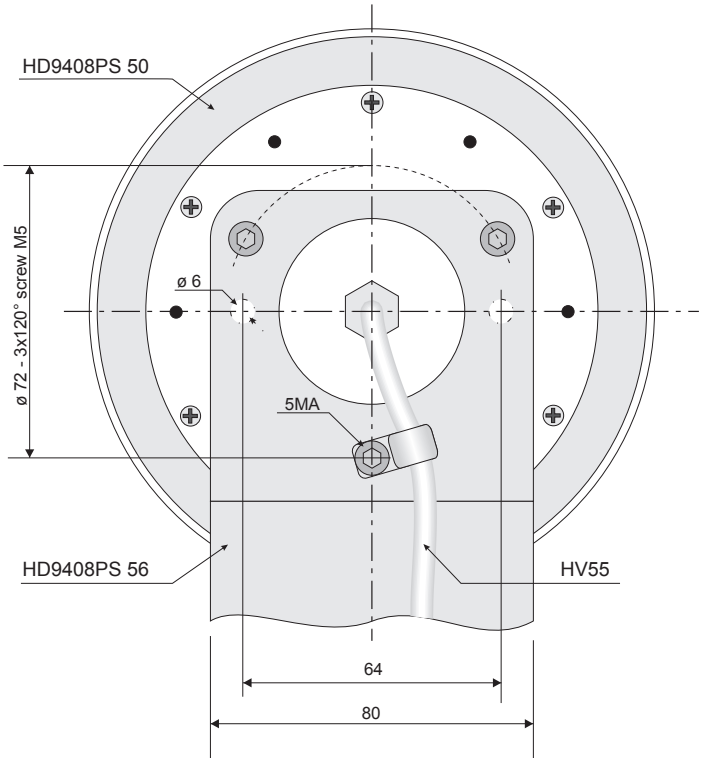

HD9408PS 50
STATIC PORT FOR BAROMETRIC MEASUREMENTS

The measurement of the barometric pressure in free field can give incorrect values of hundred pascal fluctuation and wind direction. With the static port for barometric measurements, HD9408PS 50 can minimize these errors because, in addition to act as a filter (brake) against the dynamic pressure of the wind, the barometer can operate correctly even in the presence of snow or ice and comply with the recommendations of the WMO (World Meteorological Organization). The materials used for the construction of the static port are UV resistant and can operate in temperatures between -40°C and +80°C.

INSTALLATION AND CONNECTION

Installation is simple: it must be installed away from buildings, trees or any other source which can disrupt the flow of wind. To install the bracket is available HD9408PS 56 and three stainless steel screws M5x16 Acc. The connection of the static to the barometer, for example, HD9408T or HD9408TR, is made with a special tube HV55 (internal diameter of 3mm, 6mm outer diameter) and UV resistant to climate changes. Maintenance or cleaning is minimal. The plastic parts are manufactured by BASF LURAN S777K. Clean using non aggressive detergents compatible with the material.

TECHNICAL SPECIFICATIONS

According to recommandation of the WMO, the deviation allowed measurement of wind speed 20meters/second is equal to 0.3mbar, corresponding to 300 Pascal. The HD9408PS 50 static port for barometric measurements falls within that value. The following tables show the values obtained from the tests performed in the wind tunnel.

Error due to the dynamic pressure	Lower than 0.3mbar @20°C
Working temperature	-40°C… +80°C
Connection pipe (for a tube with inside ø : 3mm, outside ø: 6mm)	Ø 3.4 mm
Weight of the static port.	200 gr
Weight of the static port equipped with the bracket	570 gr

ORDERING CODE

HD9408PS 50K: Kit consists of static port, pole mounting bracket and HV55 tube

HD9408PS 50: Static port for barometric measurements equipped with the HV55 tube

HD9408PS 56: Mounting bracket for static port, barometer fastening, pole anchor

HV55: HV55 UV- and temperature-resistant silicone tube, inside Ø : 3mm, outside Ø : 6mm, L=400mm

TESTS MADE IN THE WIND TUNNEL

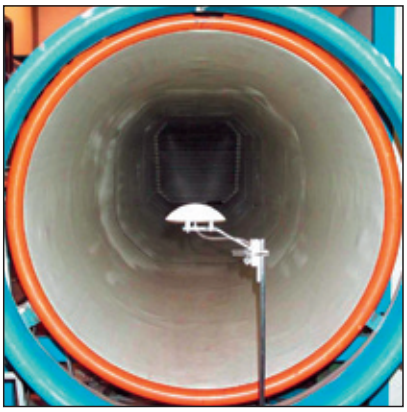

Static port put in front of the wind tunnel

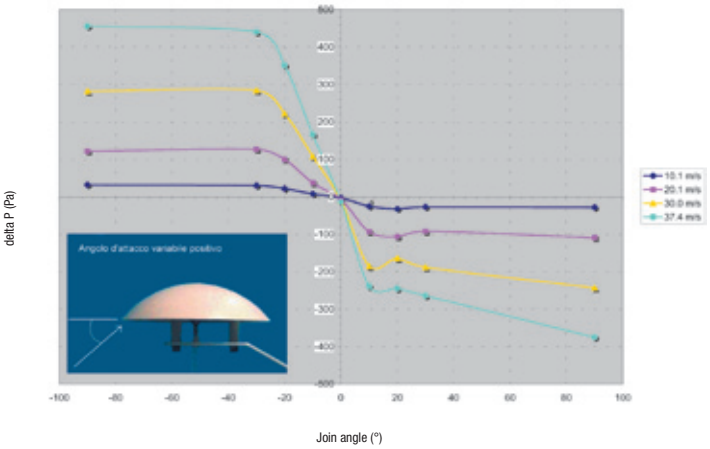

ΔP as a function join angle (yaw angle $\beta = 0°$)

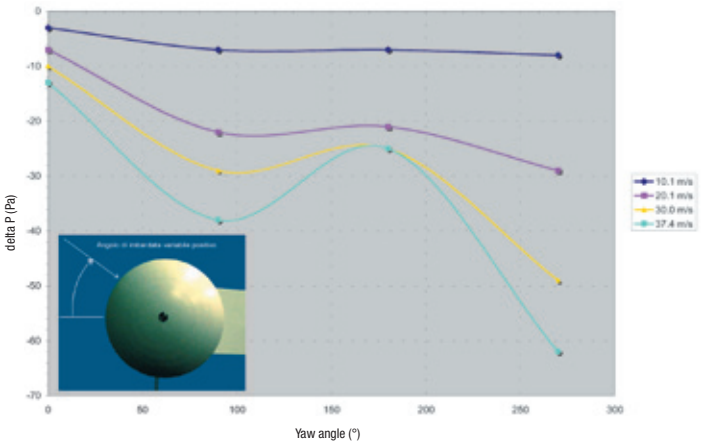

ΔP as a function of yaw angle (join angle $\alpha = 0°$)

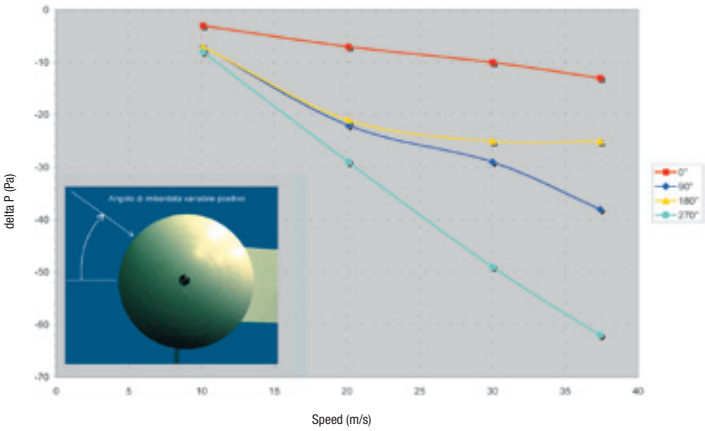

ΔP as a function of speed (join angle $\alpha = 0°$)

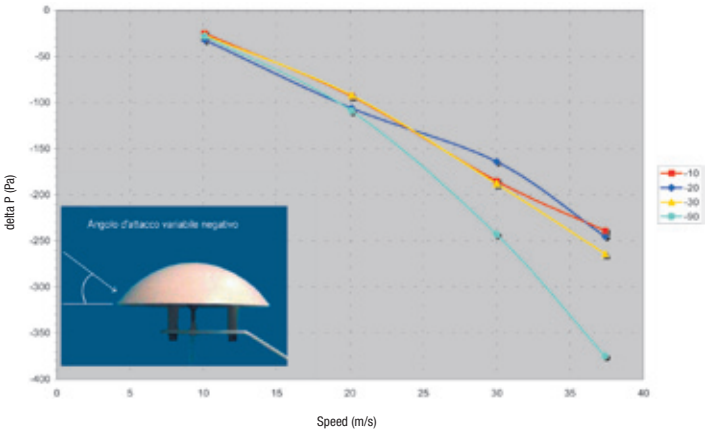

ΔP as a function of speed (yaw angle $\beta = 0°$)

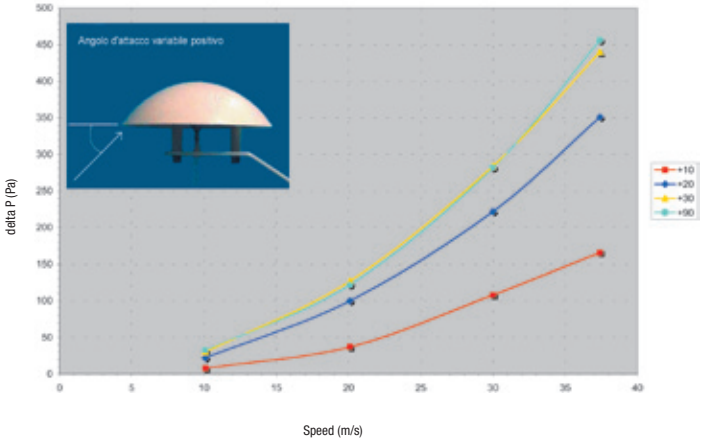

ΔP as a function of speed (yaw angle $\beta = 0°$)

HD 2601V.1
HD 2601V.2



HD 2601V.1, HD 2601V.2
4…20mA TRANSMITTER DISPLAYS WITH DIN43650 CONNECTOR

The HD2601V.1 is a 4...20mA passive transmitter display with DIN43650 connector; the HD2601V.2 model is fitted with two independent dual-output transmitter viewers.
The display is inserted between transmitter and connector. Power is supplied by the 4...20mA current loop.
The snap-in display can be programmed by the user. Two keys can be used to set scale factors, decimal point position, display update time, maximum, minimum and average values display, time passed after turn-on, open-collector digital output parameters of the single display version.
The programmable parameters are saved into a permanent memory and are not erased when power is disconnected.
All device functions are continuously monitored by an integral diagnostic system. In the single model HD2601V.1, the open-collector digital output can control a digital device or a relay coil.
The instrument display can be rotated at 90° or overturned to fit different installation conditions.

Installation and connections
Fig. 1 shows the typical configuration: the display is inserted between the transmitter (8) and the DIN43650 female connector (1).
The display has two keys: one externally accessible (5) used for data display: current measurement, maximum, minimum and average values, timer; the internal key (9) is accessible only after removing the cover, and is used together with the external key for programming.
In box (3) over the display window, the unit of measurement label can be applied.
The card supporting the display and relevant cover can be rotated at 90° pitches by unscrewing the 4 screws at the corners.

Fig. 2 and 3 illustrate the electrical connections of the single model HD2601V.1 and the dual model HD2601V.2.

Vdc represents the direct current power source.
RL, RL1 e RL2 are the devices inserted in the current loop (PLC, recorder,…).
In the HD2601V.1 model, Rd represents the load connected to the open-collector digital output.
NOTE on Fig. 2: if a relay coil is controlled, insert a diode protecting the device's output.

The numbers 1, 2 and 3 refer to the information on the instrument's connector:

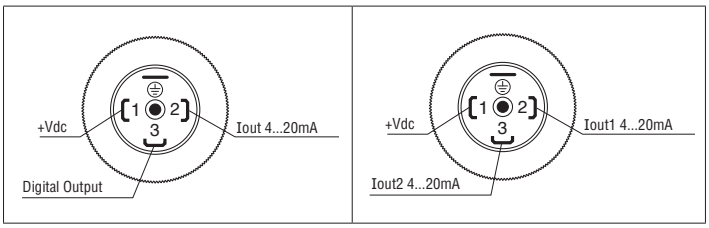

Fig.4 - HD2601V.1

Fig.5 - HD2601V.2

To proceed with the electrical connections, open the connector by removing the screw (6) as shown in the Fig. 6:

Remove the gasket (1). Unscrew the fairlead (5) and take off the gasket (4). Use a screwdriver to pry and take off the connecting terminal (2). Make the connections as shown in the Fig. 7 and 8: if present, the shielded cable braid must be connected to the earth terminal.
Once the connections are made, close the connector.

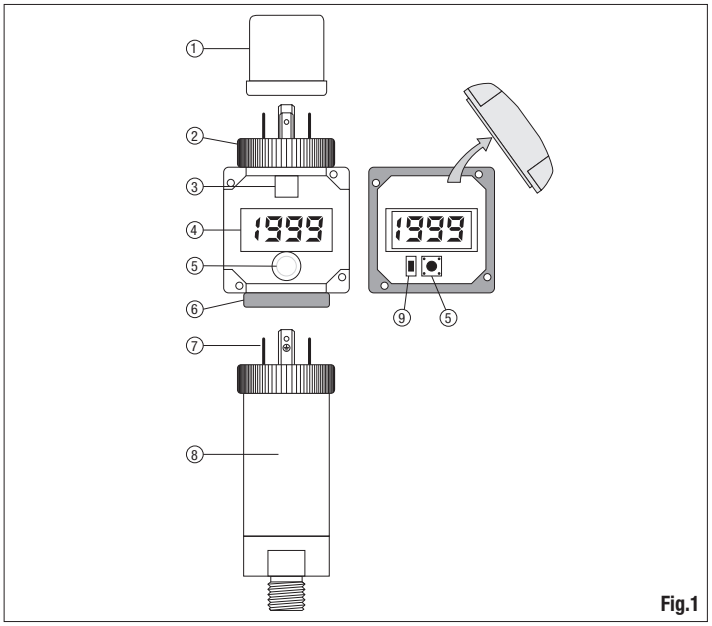

Fig.1

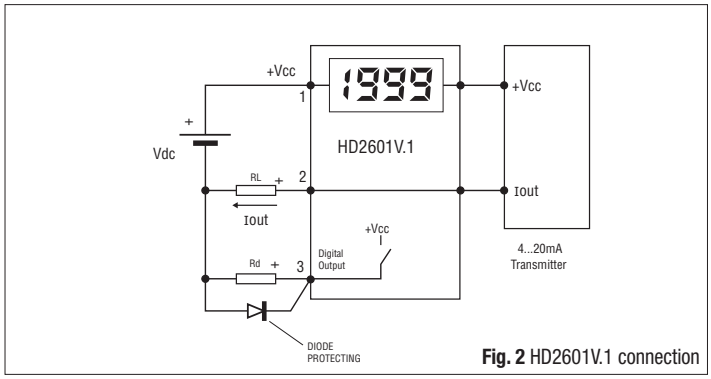

Fig. 2 HD2601V.1 connection

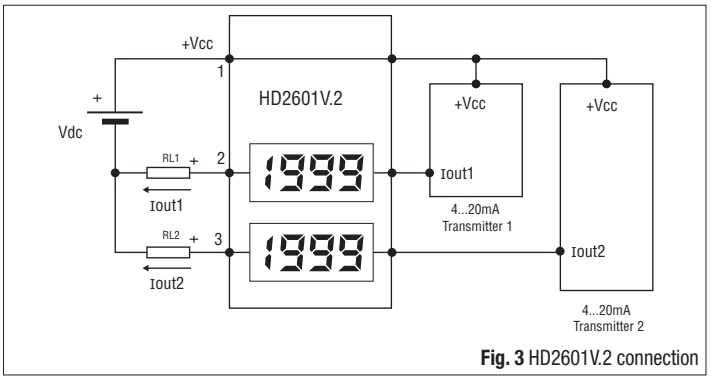

Fig. 3 HD2601V.2 connection

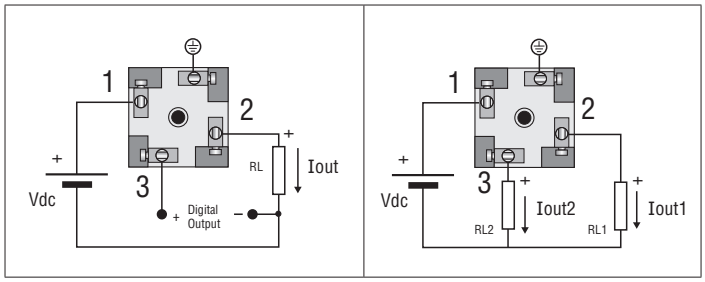

Fig. 7 - HD2601V.1
Electrical connections of the connecting terminal

Fig. 8 - HD2601V.2
Electrical connections of the connecting terminal

The display is now ready for use: proceed with the programming of the scale factors.

Maximum load
The **RL maximum load** applicable to the 4...20mA loop, after insertion of the display, can be calculated as follows (see Fig. 2 and 3):

$$RL\text{max} = \frac{\text{Vdc - (Vtx + 6)}}{0{,}022}$$

Vdc is the direct voltage, **Vtx** is the voltage drop on the transmitter (shown in the relevant technical characteristics).

Display
By pressing the external key (5) (see Fig. 1) it is possible to display, in sequence, the maximum, minimum and average of the captured measurements since the last reset (Record function), and the time passed since the last reset (Timer function).
The controls to reset the Record and Reset functions are independent.
The following table shows, in the same order, the indications provided by the display when repeatedly pressing the external key (5). The sequence starts from measurement mode:

Display indication	Notes
Current measurement	
"HIGH" message	It means "HIGH"
Maximum value	
"Lou" message	It means "LOW"
Minimum value	
"Avg" message	It means "AVERAGE"
Average value	
Y ##	## shows the years
d ##	## shows the days
H ##	## shows the hours
n ##	## shows the minutes
S ##	## shows the seconds
"MEAS"	returns to normal measurement
Current measurement	

To reset the Record (MAX, MIN and AVG) values, keep the external key pressed (5) for about 10 seconds until the display indicates "CLr" (CLEAR).
To reset the timer use the RST (RESET) function in the menu: for the details see the chapter dedicated to programming.

Programming
In order to program the display, the internal key needs to be accessed: unscrew the four screws in the corners of the display face-plate. The internal key (INT) is shown in Fig. 1 by number (9), the external key (EXT) by number (5).
Using the INT key the various menu items are scrolled. Use EXT to access the displayed item. Within the menu item, the two keys are used to increase or decrease the current information. To confirm the entered value press simultaneously the two keys.
To exit the menu, press INT and scroll all the items.

Menu Item	Description
dP	Selection of the decimal point position
ZP 4	Top scale value associated to the 4mA current
EP20	Bottom scale value associated to the 20mA current
filt	Sets the averaging filter on the measurement: this filter calculates the average current of the values captured. The instrument captures 4 measurements per second: one each 0.25s. By setting filt=0.25s no average is performed; with filt=5.00s the moving average is calculated on the last 20 samples. It is possible to set the intermediate values from 0.25s to 5.00s with 0.25s pitches.
HILO	If HILO=YES the display shows "Lo" if the current drops under the minimum threshold 4mA, and "HI" if the current raises over 20mA. If HILO=NO the display continues even outside the limits without showing any alarm.
S Fu (*)	Digital output (only HD2601V.1). By selecting YES the output is enabled, pressing NO the output is disabled.
S Pt (*)	Sets the digital output tripping point (see Fig. 9).
HYSt (*)	Sets the hysteresis width for digital output switching (see Fig. 9).
dir (*)	Sets the digital output tripping direction (see Fig. 9).
rst	Sets the timer to zero.

(*) This function is available only for the HD2601V.1 model.

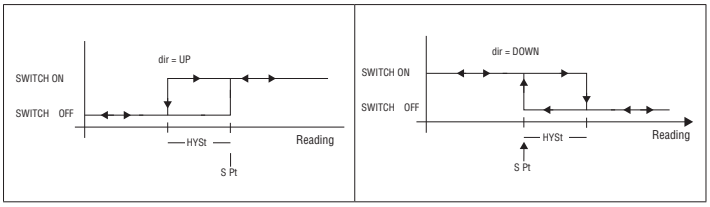

Fig. 9 Description of the Digital Output function

Technical characteristics

Display	4 digit LED, 7.6mm high. The decimal point position can be programmed.
Display range	-1999…+9999
Power	Power supplied by the 4…20mA current loop
Maximum voltage drop	6Vdc
Accuracy	0.2% of span ± 1 digit
Temperature drift	0.01%/°C
RL load resistance	RLmax = [Vdc-(Vtx + 6)] / 0,022
Speed of conversion	4 measurements per second
Electrical connections	DIN43650 connector
Parameter settings memory	Permanent
Programming	Using two keys (5 - 9), one internal
Display filter	Moving average that can be set from 1 (no average) to 20 samples
Error messages	HI = current over 20mA - LO = current under 4mA
Protection degree	IP65
Functioning temperature	-10…+80°C

Technical characteristics of the HD2601V.1 model digital output

Type of output	Open collector, ground output
Maximum current	100mA
Maximum reverse voltage	30Vdc

ORDERING CODES
HD2601V.1: Configurable sandwich LED indicator, plug-on, for transmitters with DIN 43650 connector and 4÷20 mA output, (i.e. HD2004T).
HD2601V.2: Configurable sandwich dual LED indicator, plug-on, for transmitters with DIN 43650 connector and 4÷20 mA outputs, (i.e. HD9008TRR).

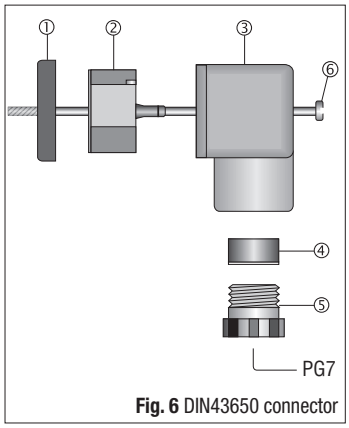

Fig. 6 DIN43650 connector



HD2601V.1



HD2601V.2



ACCREDIA
L'ENTE ITALIANO DI ACCREDITAMENTO

ACCREDIA LAT N° 124 Laboratory - pressure measurements





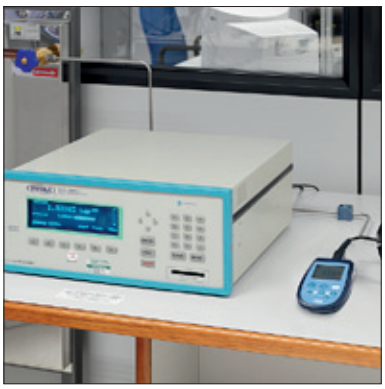







ACCREDIA
L'ENTE ITALIANO DI ACCREDITAMENTO

Laboratory LAT N° 124

DELTA OHM s.r.l.
Via G. Marconi, 5
35030 CASELLE DI SELVAZZANO (PD) - ITALIA

Tel.: +39 049 89 77 150 - fax: +39 049 63 55 96
E-mail: info@deltaohm.com
URL http://www.deltaohm.com

Permanent Laboratory

ACCREDITATION TABLE

Quantity	Instrument to be calibrated	Measuring range	Uncertainty (*)	Note
Pressure	**Pressure transducer:**			
	- in liquid medium relative condition	from 0,075 MPa to 5 MPa from 5 MPa to 100 MPa	$U(p)$ / Pa = $3{,}2\ 10^{-5}\cdot p+100$ $U(p)$ / Pa = $2{,}6\cdot10^{-5}\cdot p+2.5\ 10^{3}$	
	- in gas medium relative condition	from 1,4 kPa to 170 kPa from 0,17 to 7 MPa from 7 to 12 MPa	$U(p)$ / Pa = $5{,}5\cdot10^{-5}\cdot p+2.5$ $U(p)$ / Pa = $3{,}4\cdot10^{-5}\cdot p+30$ $U(p)$ / Pa = $9{,}0\cdot10^{-5}\cdot p+500$	
	- in gas negative medium relative condition **- in gas medium absolute condition**	from -100 kPa to -1,4 kPa from 1,4 kPa to 170 kPa from 0,17 to 7 MPa from 7 to 12 MPa	$U(p)$ / Pa = $5{,}5\cdot10^{-5}\cdot p+3$ $U(p)$ / Pa = $5{,}5\cdot10^{-5}\cdot p+3$ $U(p)$ / Pa = $3{,}4\cdot10^{-5}\cdot p+31$ $U(p)$ / Pa = $9{,}0\cdot10^{-5}\cdot p+510$	

(*) The uncertainties are expressed on a confidence level of about 95%.



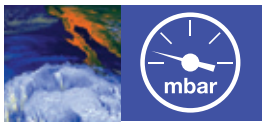
mbar