Cosel LDA30F-5

AC-DC Power Supply



Limited Availability
Used and in Excellent Condition

Open Web Page

https://www.artisantg.com/59690-1

ARTISAN® TECHNOLOGY GROUP

Your **definitive** source for quality pre-owned equipment.

Artisan Technology Group
(217) 352-9330 | sales@artisantg.com | artisantg.com

All trademarks, brandnames, and brands appearing herein are the property of their respective owners.

- Critical and expedited services
- In stock / Ready-to-ship
- We buy your excess, underutilized, and idle equipment
- Full-service, independent repair center

Artisan Scientific Corporation dba Artisan Technology Group is not an affiliate, representative, or authorized distributor for any manufacturer listed herein.

COSEL AC-DC Power Supplies Open Frame/Enclosed type

LDA30F

Ordering information

LDA 30 F -5 -□

① ② ③ ④ ⑤

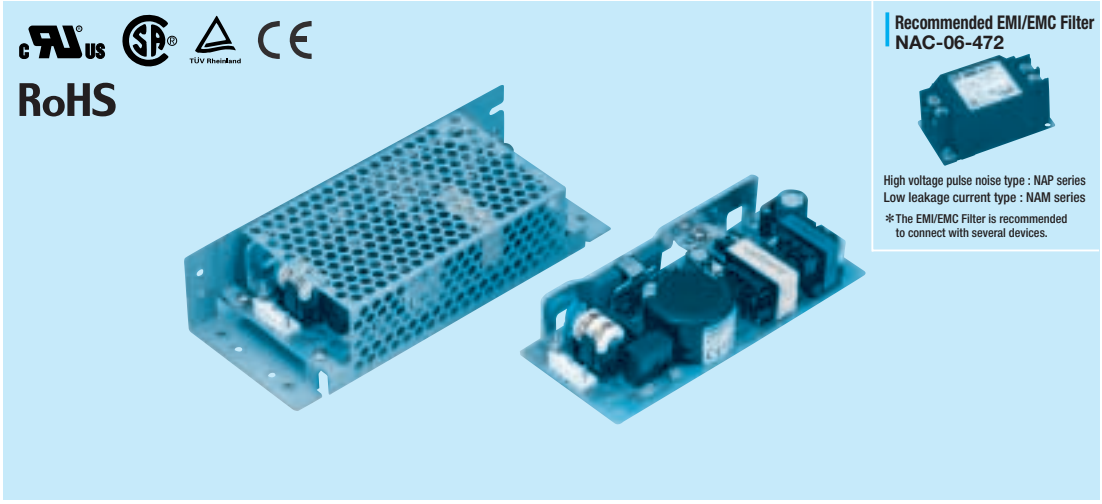

Recommended EMI/EMC Filter
NAC-06-472

High voltage pulse noise type : NAP series
Low leakage current type : NAM series
＊The EMI/EMC Filter is recommended to connect with several devices.

①Series name
②Output wattage
③Universal input
④Output voltage
⑤Optional ＊2
C :with Coating
G :Low leakage current
S :with Chassis
SN :with Chassis & cover
Y :with Potentiometer

MODEL	LDA30F-3	LDA30F-5	LDA30F-12	LDA30F-15	LDA30F-24
MAX OUTPUT WATTAGE[W]	18	30	30	30	31.2
DC OUTPUT	3V 6.0A	5V 6.0A	12V 2.5A	15V 2.0A	24V 1.3A

SPECIFICATIONS

	MODEL		LDA30F-3	LDA30F-5	LDA30F-12	LDA30F-15	LDA30F-24
INPUT	VOLTAGE[V]		AC85 - 264 1φ or DC110 - 370				
	CURRENT[A]	ACIN 100V	0.8typ (Io=100%)				
		ACIN 200V	0.4typ (Io=100%)				
	FREQUENCY[Hz]		47 - 440 or DC				
	EFFICIENCY[%]		70typ	75typ	77typ	78typ	79typ
	INRUSH CURRENT[A]	ACIN 100V	15typ (Io=100%) (At cold start)				
		ACIN 200V	30typ (Io=100%) (At cold start)				
	LEAKAGE CURRENT[mA]		0.75max (60Hz, According to UL, CSA, VDE and DEN-AN)				
OUTPUT	VOLTAGE[V]		3	5	12	15	24
	CURRENT[A]		6	6	2.5	2	1.3
	LINE REGULATION[mV]		20max	20max	48max	60max	96max
	LOAD REGULATION[mV]		40max	40max	100max	120max	150max
	RIPPLE[mVp-p]	0 to +50℃	80max	80max	120max	120max	120max
		-10 - 0℃	140max	140max	160max	160max	160max
	RIPPLE NOISE[mVp-p]	0 to +50℃	120max	120max	150max	150max	150max
		-10 - 0℃	160max	160max	180max	180max	180max
	TEMPERATURE REGULATION[mV]		60max	60max	150max	180max	290max
	DRIFT[mV]	＊1	20max	20max	48max	60max	96max
	START-UP TIME[ms]		200max (ACIN 100V, Io=100%)				
	HOLD-UP TIME[ms]		10typ (ACIN 85V, Io=100%) 20typ (ACIN 100V, Io=100%)				
	OUTPUT VOLTAGE ADJUSTMENT RANGE[V]		2.85 - 3.6	Fixed ("Y"which can be adjusted the output is available as option :5, 12, 15, 24V ±10%)			
	OUTPUT VOLTAGE SETTING[V]		——	4.9 - 5.3	11.5 - 12.5	14.4 - 15.6	23.0 - 25.0
PROTECTION CIRCUIT AND OTHERS	OVERCURRENT PROTECTION		Works over 105% of rating and recovers automatically				
	OVERVOLTAGE PROTECTION		4.00 - 5.25V	Works at 115 - 140% of rating			
	OPERATING INDICATION		Not provided				
	REMOTE SENSING		Not provided				
	REMOTE ON/OFF		Not provided				
ISOLATION	INPUT-OUTPUT		AC3,000V 1minute, Cutoff current = 10mA, DC500V 50MΩ min (At Room Temperature)				
	INPUT-FG		AC2,000V 1minute, Cutoff current = 10mA, DC500V 50MΩ min (At Room Temperature)				
	OUTPUT-FG		AC500V 1minute, Cutoff current = 100mA, DC500V 50MΩ min (At Room Temperature)				
ENVIRONMENT	OPERATING TEMP.,HUMID.AND ALTITUDE		-10 to +60℃, 20 - 90%RH (Non condensing) (Refer to DERATING CURVE) 3,000m (10,000feet) max				
	STORAGE TEMP.,HUMID.AND ALTITUDE		-20 to +75℃, 20 - 90%RH (Non condensing) 9,000m (30,000feet) max				
	VIBRATION		10 - 55Hz, 19.6m/s² (2G), 3minutes period, 60minutes each along X, Y and Z axis				
	IMPACT		196.1m/s² (20G), 11ms, once each X, Y and Z axis				
SAFETY AND NOISE REGULATIONS	AGENCY APPROVALS		UL60950-1, EN60950-1, EN50178, CSA C22.2 No.60950-1 Complies with DEN-AN and IEC60950-1				
	CONDUCTED NOISE		Complies with FCC-B, CISPR22-B, EN55022-B, VCCI-B				
OTHERS	CASE SIZE/WEIGHT		55×26×133mm (W×H×D) /200g max (without chassis and cover)				
	COOLING METHOD		Convection				

＊1 Drift is the change in DC output for an eight hour period after a half-hour warm-up at 25℃, with the input voltage held constant at the rated input/output.
＊2 Please contact us about safety approvals for the model with option.
＊ Avoid prolonged use under over-load.
＊ Series/Parallel operation with other model is not possible.
＊ Derating is required when operated with chassis and cover.

External view

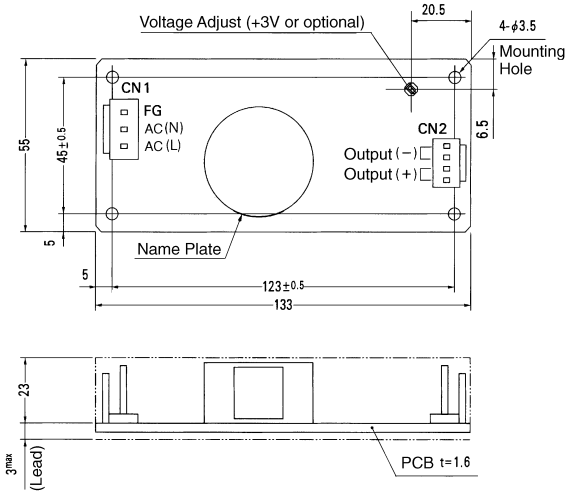

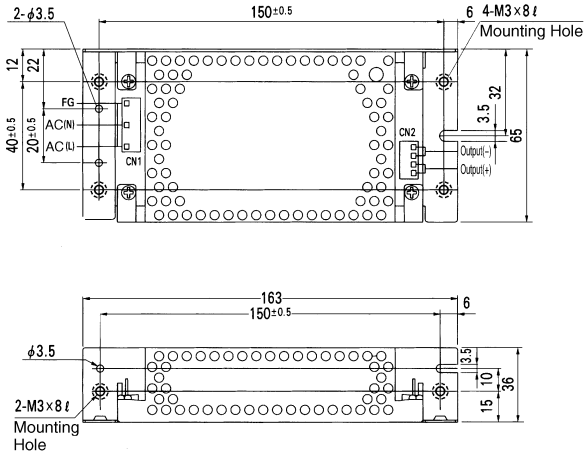

I/O Connector		Mating Connector	Terminal
CN1	B3P5-VH	VHR-5N	Chain: SVH-21T-P1.1
			Loose: BVH-21T-P1.1
CN2	B4P-VH	VHR-4N	Chain: SVH-21T-P1.1
			Loose: BVH-21T-P1.1

(Mfr : J.S.T.)

<PIN CONNECTION>

	Pin No.	Input
CN1	1	AC(L)
	2	
	3	AC(N)
	4	
	5	FG

	Pin No.	Output
CN2	1	−V
	2	−V
	3	+V
	4	+V

※Keep drawing current per pin below 5A for CN2.

※Weight : 200g or less (Without chassis and cover)
※Tolerance : ±1
※Dimensions in mm.
※PCB Material : Glass composite (CEM3)
※Chassis and cover is optional.
※Mounting torque : 0.6N·m (6.3kgf·cm) max

LDA

Performance data

■STATIC CHARACTERISTICS (LDA30F-5)

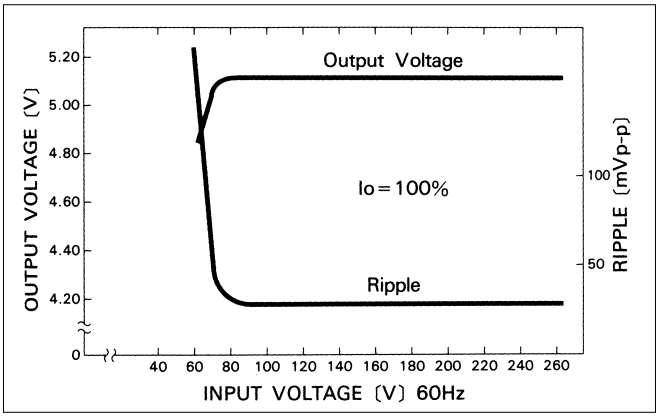

■RISE TIME & FALL TIME (LDA30F-5)

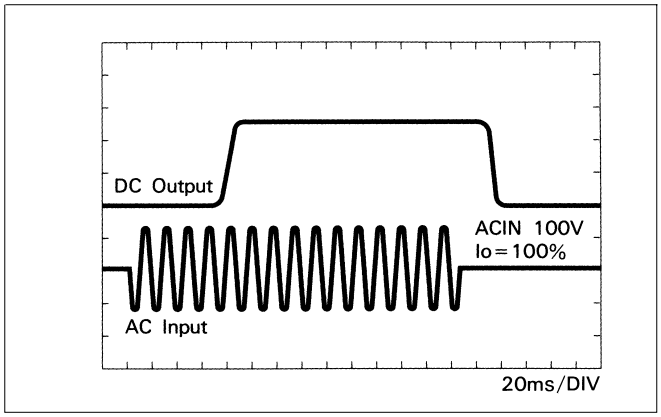

■OVERCURRENT CHARACTERISTICS (LDA30F-5)

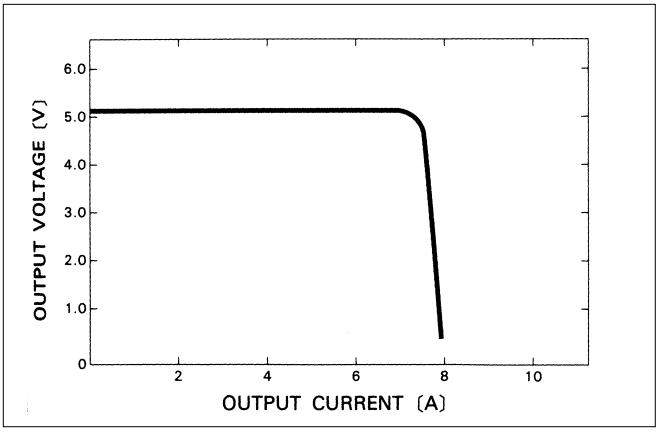

■DERATING CURVE

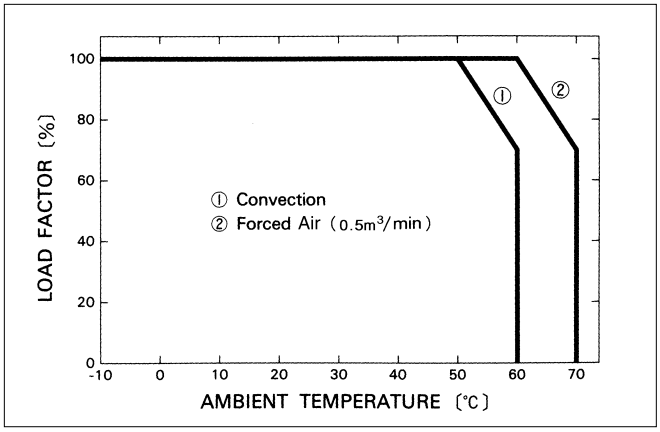

Artisan Technology Group is an independent supplier of quality pre-owned equipment

Gold-standard solutions

Extend the life of your critical industrial, commercial, and military systems with our superior service and support.

We buy equipment

Planning to upgrade your current equipment? Have surplus equipment taking up shelf space? We'll give it a new home.

Learn more!

Visit us at **artisantg.com** for more info on price quotes, drivers, technical specifications, manuals, and documentation.

Artisan Scientific Corporation dba Artisan Technology Group is not an affiliate, representative, or authorized distributor for any manufacturer listed herein.

We're here to make your life easier. How can we help you today?

(217) 352-9330 | sales@artisantg.com | artisantg.com

ARTISAN® TECHNOLOGY GROUP