comnet
Communication Networks



INSTALLATION AND OPERATION MANUAL

FVT/FVR1031(M)(S)1

10-BIT DIGITAL VIDEO WITH BI-DIRECTIONAL DATA
(RS232, 422 AND RS485 2 & 4 WIRE)
PELCO AND PANASONIC "UP-THE-COAX"

The FVT/FVR1031 transmits 10 bit digital video and full duplex data over one Singlemode or Multimode fiber. The video supports NTSC, PAL and SECAM CCTV camera systems. The data supports RS232, RS422 and RS485 (2W & 4W) at data rates up to 115 Kbps (NRZ). The FVT/FVR1031 series also supports "UP-THE-COAX" control signals for Pelco and Panasonic cameras with a maximum distance of 1500 feet (590 meters). The product is "Plug-and-Play" with no electrical or optical adjustments.

The FVT/FVR1031 allows the user to choose bi-directional data or up-the-coax data through a switch on the unit, as described in **Figure 6** on **Page 3**.

Bi-color (Red/Green) LED indicators are provided for rapidly ascertaining equipment operating status. **Figure 4** on **Page 3** describes the LED indicators for each light on the unit.

These units are interchangeable between stand-alone or card mount configurations, or used with a DIN-rail adapter. See **Figure A** on **Page 4** for installation instructions.

See **Figures 1 – 7** for complete installation details.

FIGURE 1 – FVT/FVR1031 TRANSMITTER AND RECEIVER



MULTIMODE OR SINGLE MODE
OPTICAL FIBER

BLACK

BLACK WITH WHITE STRIPES

Power Supply:
Surface Mount: 8–15 VDC @ 2W
Rack Mount: From Rack

NOTE: Remove Electrical Connector for
Rack Mount Units

FIGURE 2 – FVT1031 TRANSMITTER

FRONT PANEL



REAR PANEL

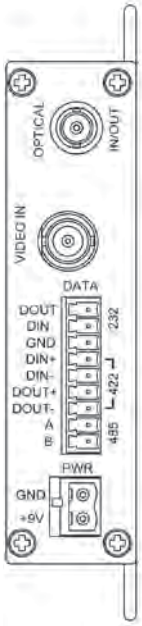

FIGURE 3 – FVR1031 RECEIVER

FRONT PANEL



REAR PANEL

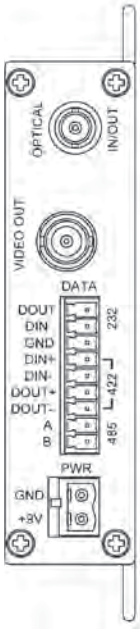

FIGURE 4 – LED INDICATORS

	LINK	VIDEO	DATA IN	DATA OUT	POWER
GREEN	Communication link has been established over optical fiber	An active video signal is present on the BNC connector.	An active data signal is present on the input pins of the data connector.	An active data signal is present on the output pins of the data connector.	Unit powered up
RED	Communication link has not been established.	–	–	–	–
OFF	Unit powered down.				

FIGURE 5 – DATA CHANNEL CONNECTIONS

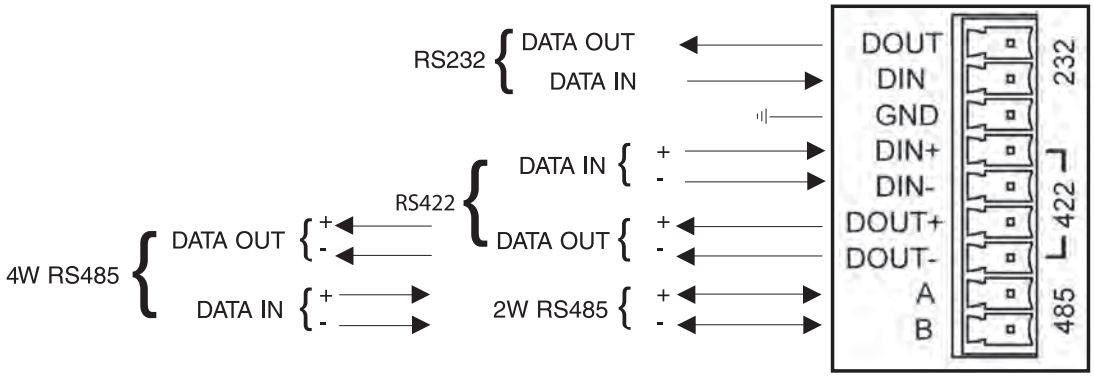

FIGURE 6 – SWITCH POSITIONS

The mode for each data channel is configured using a pair of switches on the front panel of the unit.

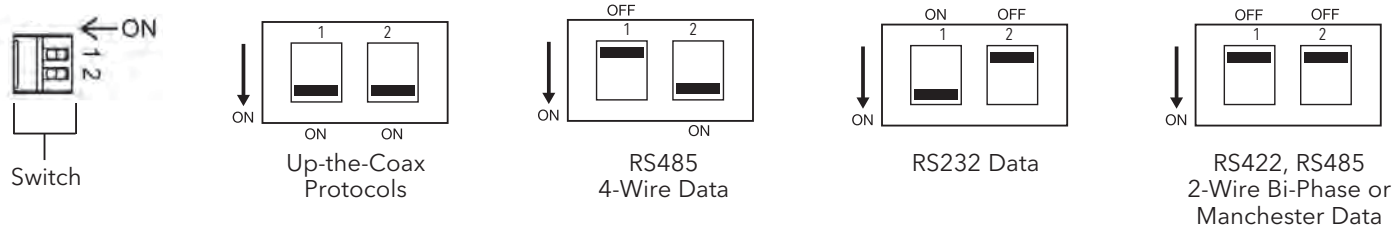

FIGURE 7 – DATA CONNECTIONS

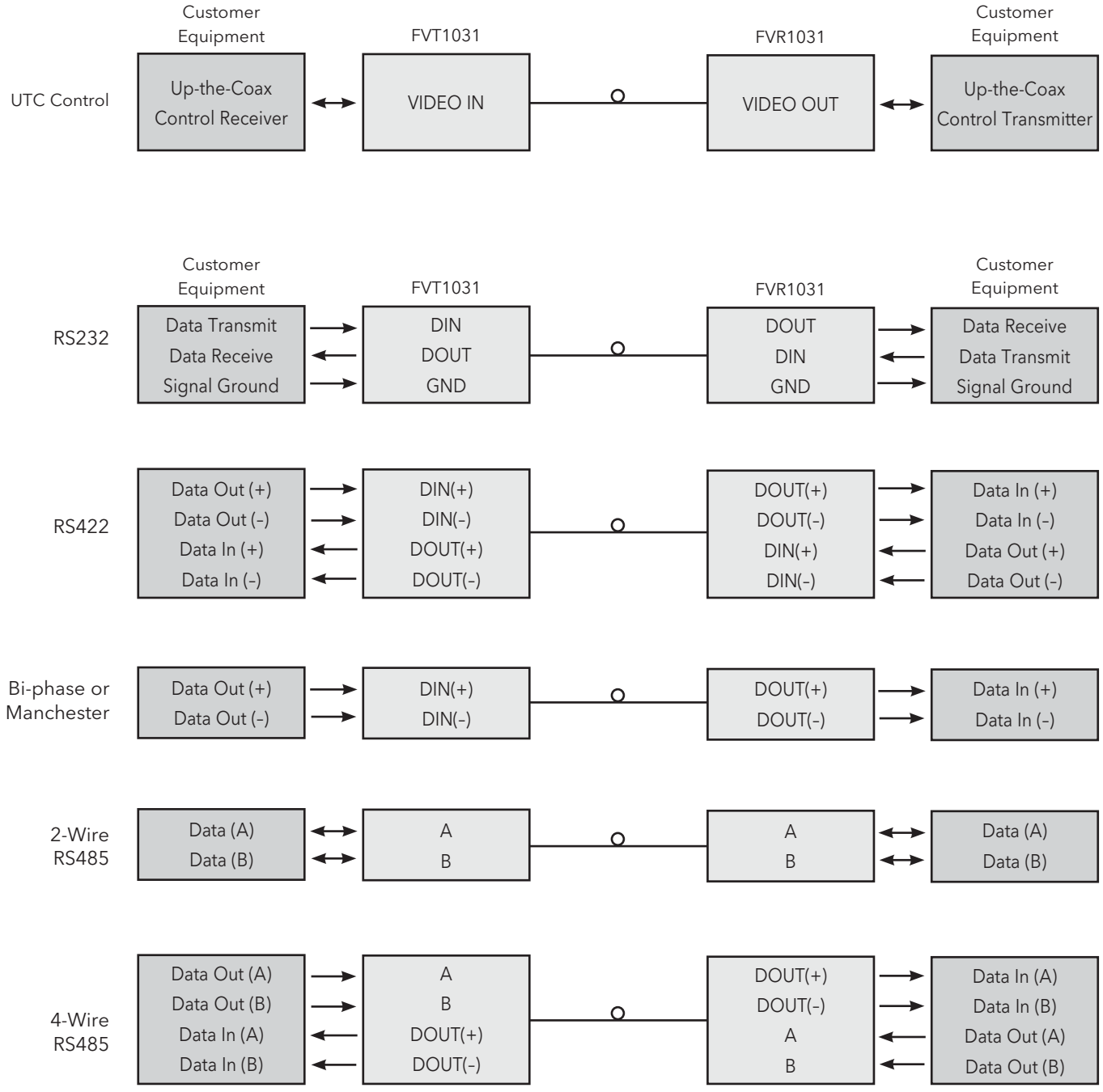

INSTALLATION CONSIDERATIONS

This fiber-optic link is supplied as a Standalone/Rack module. Units should be installed in dry locations protected from extremes of temperature and humidity.

C1-US, C1-EU, C1-AU OR C1-CH CARD CAGE RACKS

CAUTION: Although the units are hot-swappable and may be installed without turning power off to the rack, ComNet recommends that the power supply be turned off and that the rack power supply is disconnected from any power source. **Note:** Remove electrical connector before installing in card cage rack.

1. Make sure that the card is oriented right side up, and slide it into the card guides in the rack until the edge connector at the back of the card seats in the corresponding slot in the rack's connector panel. Seating may require thumb pressure on the top and bottom of the card's front panel.

CAUTION: Take care not to press on any of the LEDs.

2. Tighten the two thumb screws on the card until the front panel of the card is seated against the front of the rack.

WARNING: Standalone units are to be used with a Listed Class 2 or LPS power supply

IMPORTANT SAFEGUARDS:

A) Elevated Operating Ambient - If installed in a closed or multi-unit rack assembly, the operating ambient temperature of the rack environment may be greater than room ambient. Therefore, consideration should be given to installing the equipment in an environment compatible with the maximum ambient temperature (Tma) specified by the manufacturer.

B) Reduced Air Flow - Installation of the equipment in a rack should be such that the amount of air flow required for safe operation of the equipment is not compromised.

MADE IN THE USA

FIGURE A

Dimensions are for a standard ComNet™ one slot module

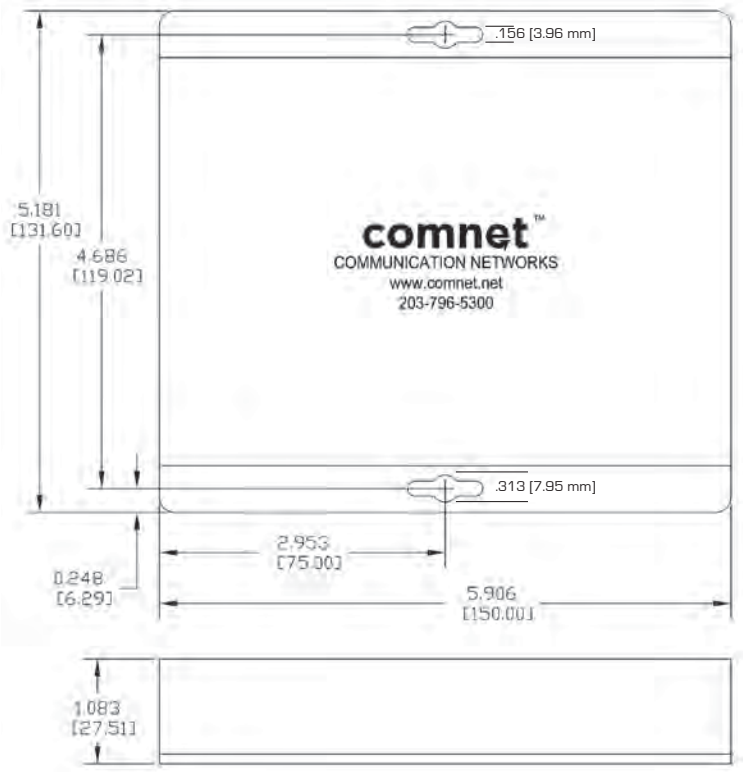

comnet Communication Networks

3 CORPORATE DRIVE | DANBURY, CT 06810 | USA
T: 203.796.5300 | F: 203.796.5303 | TECH SUPPORT: 1.888.678.9427 | INFO@COMNET.NET

8 TURNBERRY PARK ROAD | GILDERSOME | MORLEY | LEEDS, UK LS27 7LE
T: +44 (0)113 307 6400 | F: +44 (0)113 253 7462 | INFO-EUROPE@COMNET.NET

© 2012 Communications Networks Corporation. All Rights Reserved. "ComNet" and the "ComNet Logo" are registered trademarks of Communication Networks, LLC.